www.bergab.ru Берг АБ prom@bergab.ru Тел.(495)-223-30-70,факс (495) 223-3071

BISHOPWISECARVER®

UtiliTrak®
Linear Guide

Built on
DUALVEE
Motion Technology®

HEPCO®
www.HepcoMotion.com

www.bergab.ru

Contents

Introduction & Product Comparison Overview 1-3

3-Wheel Carriage Assemblies & Channel – PW/SW Series 4-7

4 and 5-Wheel Carriage Assemblies – SW Series 8-9

Stainless Steel Composite Assembly & Channel 10-11

System Adjustment 12

Mounting Details 12

Load Capacity 13

Lubrication 13

Accuracy 13

Load/Life Calculations 13

What's Inside

3, 4 or 5-wheel carriage* assemblies with the guide wheels mounted in-line roll along (and are captured within) the channel guide rail. For the 3 and 4-wheel carriage assemblies, the two outside guide wheels are concentric, while the centre wheels are eccentric. The 5-wheel carriage assemblies feature concentric centre wheel and outer wheels with eccentric second and fourth wheels.

Carriage assemblies are pre-set at the factory, but are easily field adjusted by rotating the eccentrically mounted centre guide wheels. This allows modification of running characteristics such as drag, breakaway force and preload.

Each wheel carriage assembly includes a standard lubricator, which distributes a light coat of oil along the length of the channel during normal operation. Lubrication of the channel increases life and speed capacity.

*PW Series polymer and CR Series stainless steel composite wheel carriage assemblies available in 3-wheel configuration only.

www.bergab.ru

Introducing
UtiliTrak® Linear Guides

The UtiliTrak® linear guide system from Bishop-Wisecarver is designed for applications where low cost, easy installation and minimal maintenance requirements are the primary design objectives. Constructed with DualVee Motion Technology®, UtiliTrak® offers high reliability, easy installation and low maintenance in a sleek, compact design.

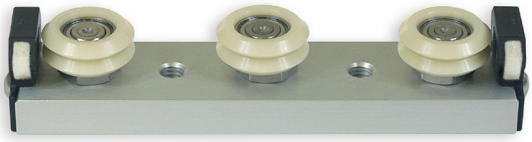

Designed primarily for transport type applications, UtiliTrak® is intended for use where load capacity, stiffness, and positional accuracy are less demanding than machine tool grade applications. UtiliTrak® offers a low cost alternative to recirculating ball guide technologies, which often require a considerable amount of surface preparation, adding significantly to the total installed cost.

UtiliTrak® can be specified in three basic formats:

- **SW – Hardened and ground steel channel with precision steel wheels.**
- **PW – Aluminium alloy channel with polymer overmoulded wheels.**
- **CR – Stainless steel track mounted to aluminium channel with stainless steel wheels.**

See page 2 for full specification

Open/Guided Mounting Configuration

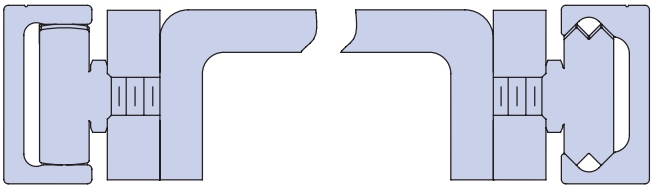

Open Channel **Vee Channel**

Features and benefits

- Antifriction operation
- Low noise
- Smooth running
- High speed capacity
- Unlimited travel lengths
- High load capacity
- Resistant to contamination

www.bergab.ru

Product Comparison and Overview

Features	SW Series UtiliTrak®	PW Series UtiliTrak®	CR Series Stainless Steel Composite UtiliTrak®
Channel/Channel Assembly	One-piece ground carbon bearing steel channel, running surface smooth to Ra 0.8µm, hardened steel raceways, RoHS compliant anti-corrosion plated.	6063 – T6 aluminium alloy channel	Induction heat treated 420 stainless steel DualVee® track mounted to an extruded aluminum channel
Studded DualVee® Guide Wheels	52100 carbon steel, ground, double row, angular contact bearing arrangement, available sealed or shielded, internal lubrication	High temp polymer overmoulded on a stainless steel bearing arrangement, built-in wiper caps at each end clear debris from the channel surface	440C stainless steel, double row, angular contact bearing arrangement, sealed
MadeWell™ Crown Rollers	52100 carbon steel, ground, double row, angular contact bearing arrangement, available sealed or shielded, internal lubrication	High temp polymer overmoulded on a stainless steel single row deep groove bearing, built-in wiper caps at each end clear debris from the channel surface	
Wheel Sizes	1, 2 and 3	0, 1 and 2	1, 2 and 3
Wheel Carriage Assembly	3, 4 or 5-wheel configuration	3-wheel configuration only	3-wheel configuration only
Lubricator & Wiper Assembly	Nylon end cap with felt lubricator, one lubricator assembly on each end, synthetic oil	Nylon end cap with felt lubricator, one lubricator assembly on each end, synthetic oil	Stainless steel stamped felt lubricator with synthetic oil, centrally located lubricator
Load Capacity	Up to 14,040N	Up to 311N	Up to 5,739N
Speeds	Up to 5.5 m/s	Up to 1.0 m/s	Up to 5.5 m/s
Acceleration	Up to 49 m/s^2	Up to 29 m/s^2	Up to 49 m/s^2
Key Benefits	High speeds, excellent load capacity, smooth antifriction operation, debris tolerant	Lowest installed cost in its class, corrosion resistant, low noise, lightweight, wear resistant	High speeds, excellent load capacity, smooth antifriction operation, debris tolerant, corrosion resistant

www.bergab.ru

Wheel Carriage and Vee Channel Assembly

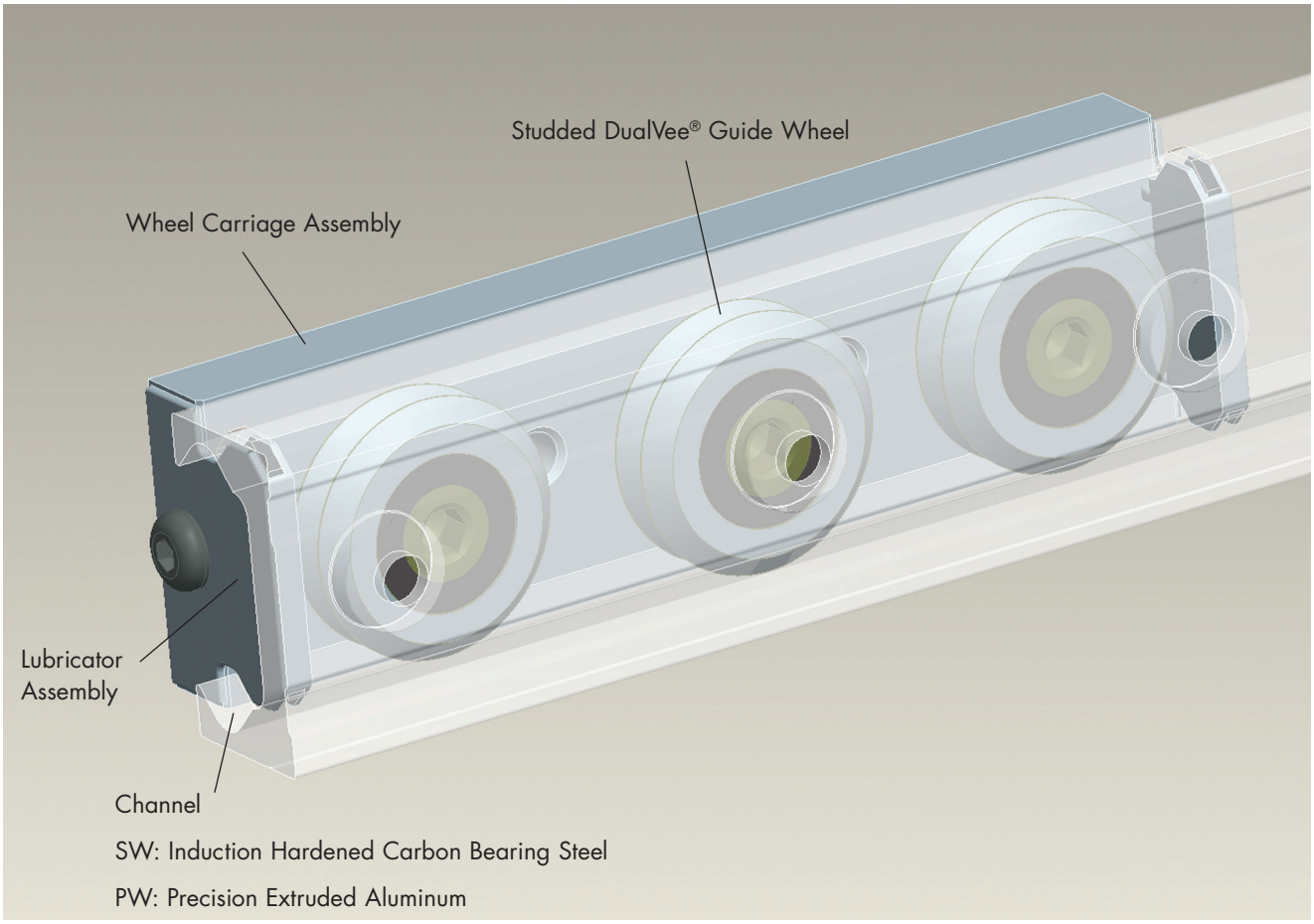

MadeWell™ Crown Roller & Open Channel Assembly

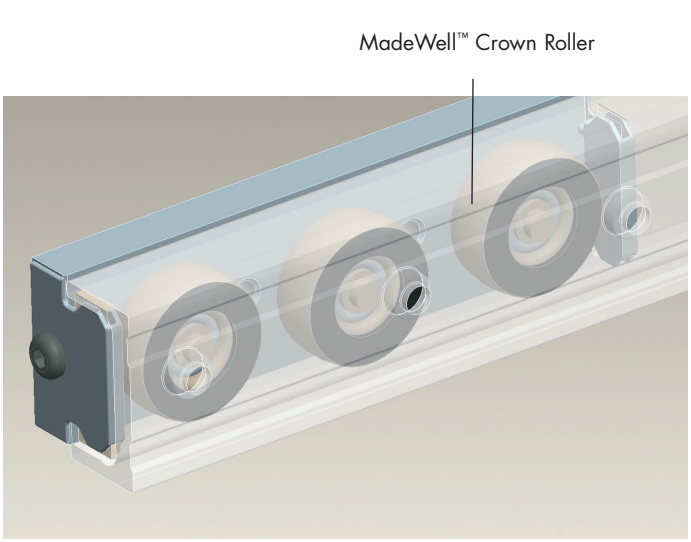

CR Series Stainless Steel Composite Assembly

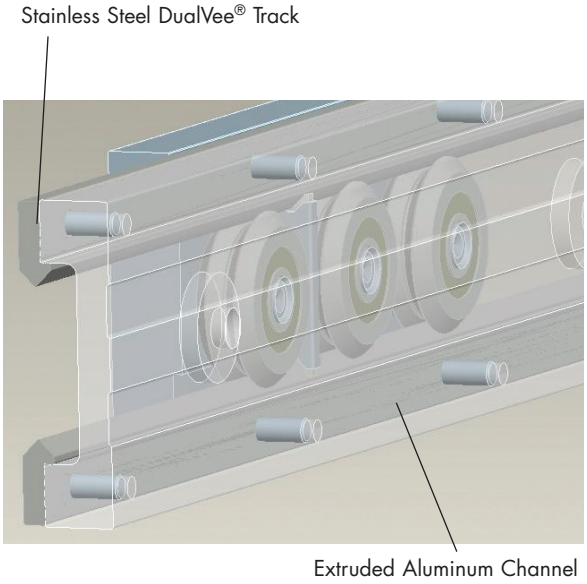

www.bergab.ru

PW/SW Series 3-Wheel Carriage Assemblies

PW Series

- Vee style carriage assembly for PW Series aluminum channel
- Light to medium duty transport applications
- Extremely low noise
- Lightweight and economical

SW Series

- Vee style carriage assembly for SW Series steel channel
- Medium to heavy duty transport applications
- High speed capability
- Smooth antifriction operation

Dimensions

UtiliTrak® Size	PW[4] Part No.	SW[1] Part No.	A	B	C	D	E Socket Size	F	G
0	UT0WPAP	-	79.9	18	22	7.9	8	22	M4x0.7
1	UT1WPAP	UT1WPA	113.5	24	26.3	8.8	10	40	M6x1
2	UT2WPAP	UT2WPA	144.2	38	35	11.8	13	45	M8x1.25
3	-	UT3WPA	201.3	55	50	15.8	15	60	M10x1.5

All dimensions in mm

Load Capacity (Max)

UtiliTrak® Size	Radial F_R	Axial F_A	M_P	M_Y	M_R	C	Radial F_R	Axial F_A	M_P	M_Y	M_R	C
	PW Series Wheel Carriage						SW Series Wheel Carriage					
0	55	88	3	1.5	1	130	-	-	-	-	-	-
1	110	155	8	3	2	200	2440	719	18	30.5	7	5600
2	165	311	18	8	4	350	5300	1475	58	100	22.7	10200
3	-	-	-	-	-	-	11800	5100	229	346	118	21600

Loads in N, Moment loads in Nm

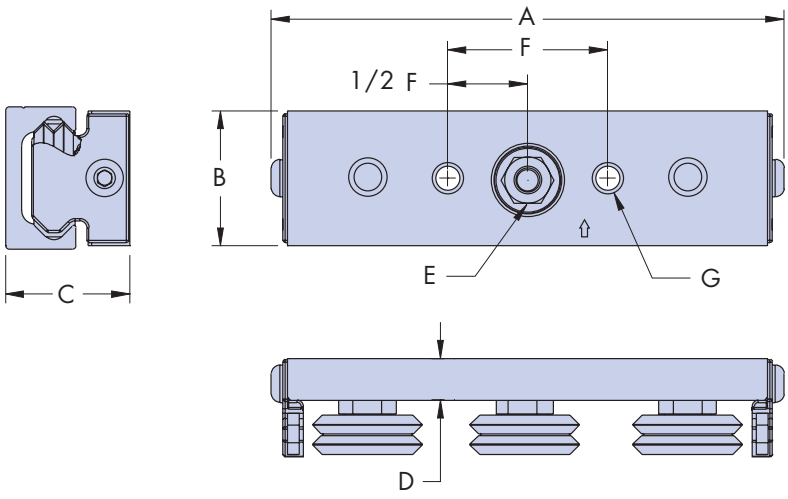

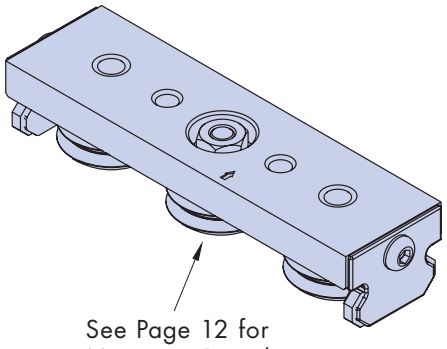

See Page 12 for Mounting Details

Notes:

1. SW series comes standard with shielded wheels, for wheels with Nitrile seals add "X" to the end of the Part Number as follows: UT1WPA**X**.
2. See page 13 for Load / Life formulas.
3. See page 12 for mounting orientation.
4. PW wheel carriages have polymer outer Vee wheels over moulded on stainless steel bearings.

www.bergab.ru

PW/SW Series Vee Channel

PW Series

- Matched component for PW Series Vee wheel carriage assemblies
- 6063-T6 aluminum alloy channel
- Lightweight

SW Series

- Matched component for SW Series Vee wheel carriage assemblies
- Carbon bearing steel with hardened steel raceways
- Running surface smooth to Ra 0.8µm

Dimensions

UtiliTrak® Size	PW Part No.	SW Part No.	H	J	K	L Max[1]	M	N Dia x Depth (Counterbore)	O (Mounting Hole)	P
0	UTTA0	-	11	4	20	3600	See formula below	8.3 x 3	4.8	80
1	UTTA1	UTTS1	15	4	26	3600		9.8 x 2.8	5.8	80
2	UTTA2	UTTS2	19.7	4.5	40	3600		14.3 x 3	8.8	80
3	-	UTTS3	30	8	58	3600		14.3 x 5	8.8	80

All dimensions in mm

Weights

UtiliTrak® Size	Channel Weight (kg/m)	Wheel Carriage Weight (g)	Channel Weight (kg/m)	Wheel Carriage Weight (g)
	PW Series		SW Series	
0	0.3	46		-
1	0.5	92	1.46	114
2	0.93	243	2.7	330
3	-	-	5.91	943

To Calculate M:

Step 1: Calculate number of hole spaces

$$\frac{\text{Length (in mm)} - X}{80} = \text{\# of hole spaces (round down to nearest whole number)}$$

X = 14 (size 0)

X = 16 (size 1)

X = 18 (size 2)

X = 20 (size 3)

Step 2: Calculate M

$$\frac{\text{Length} - (\text{\# of spaces} \times 80)}{2} = M \quad \text{(Note 4)}$$

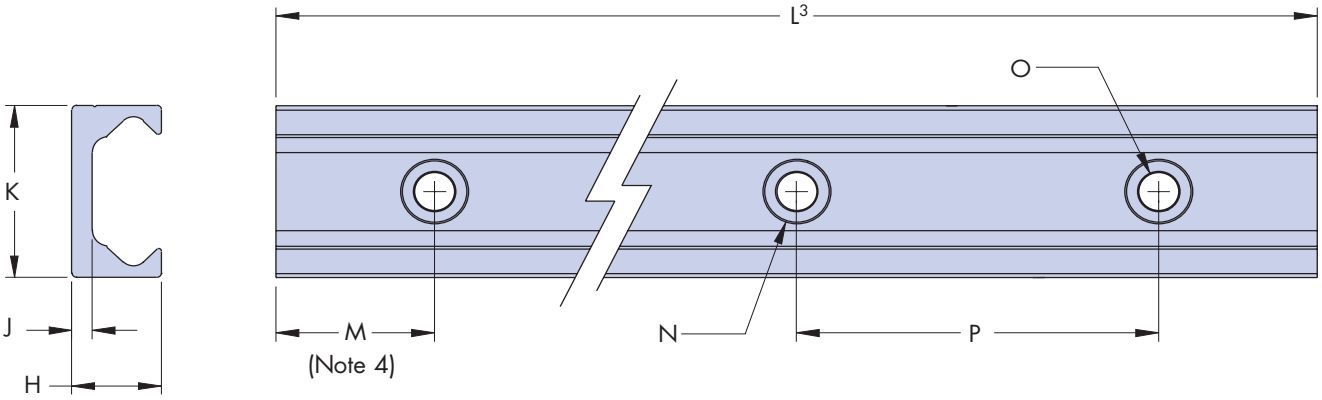

Notes:

1. "L" is maximum one piece length.
2. For ordering add length in mm after Part Number Ex. UTTA0-1000 (one metre length).
3. Overall length +/- 2 mm.
4. Customer to advise 'M' dimensions when ordering, otherwise end hole position will be equal at both ends.

www.bergab.ru

PW/SW Series Crown Roller 3-Wheel Carriage Assemblies

PW Series

- Crown roller style carriage assembly for PW Series aluminum channel
- Intended for radial loads only
- Extremely low noise
- Lightweight and economical

SW Series

- Crown roller style carriage assembly for SW Series steel channel
- Intended for radial loads only
- High speed capability
- Smooth antifriction operation

Dimensions

UtiliTrak® Size	PW[4] Part No.	SW[1] Part No.	A	B	C Min-Max	D	E Socket Size	F	G
0	UT0WPAPR	-	79.9	18	22-23.1	7.9	8	22	M4x0.7
1	UT1WPAPR	UT1WPAR	113.5	24	25.3-27.6	8.8	10	40	M6x1
2	UT2WPAPR	UT2WPAR	144.2	38	34.7-37.4	11.8	13	45	M8x1.25
3	-	UT3WPAR	201.3	55	46.9-53.4	15.8	15	60	M10x1.5

All dimensions in mm

Load Capacity (Max)

UtiliTrak® Size	Radial F_R	Axial F_A	M_P	M_Y	M_R	C	Radial F_R	Axial F_A	M_P	M_Y	M_R	C
	PW Series Wheel Carriage						SW Series Wheel Carriage					
0	55	0	0	1.5	0	130	-	-	-	-	-	-
1	110	0	0	3	0	200	2440	0	0	30.5	0	5600
2	165	0	0	8	0	350	5300	0	0	100	0	10200
3	-	-	-	-	-	-	11800	0	0	346	0	21600

Loads in N, Moment loads in Nm

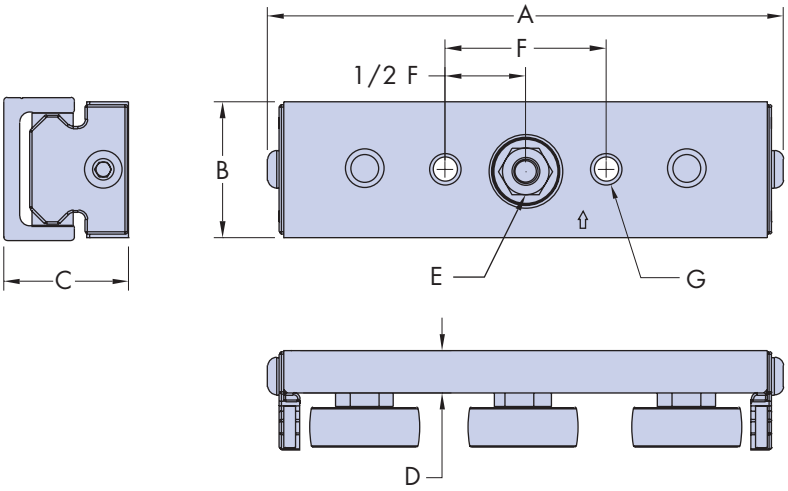

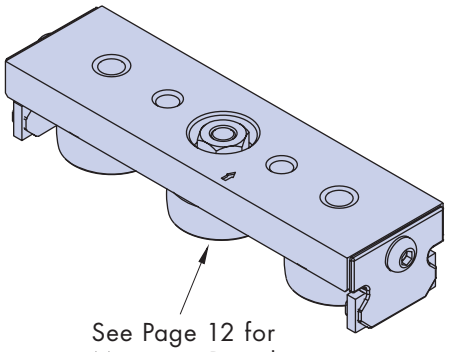

See Page 12 for Mounting Details

Notes:

1. SW series comes standard with shielded wheels, for wheels with Nitrile seals add "X" to the Part Number as follows: UTIWPA**X**R, UT2WPA**X**R, UT3WPA**X**R.
2. See page 13 for Load / Life formulas.
3. See page 12 for mounting orientation.
4. PW wheel carriages have polymer outer wheels over moulded on stainless steel bearings.

www.bergab.ru

PW/SW Series Open Channel

PW Series

- Matched component for PW Series MadeWell™ crown roller carriage assemblies
- 6063-T6 aluminum alloy channel
- Lightweight

SW Series

- Matched component for SW Series crown roller carriage assemblies
- Carbon bearing steel with hardened steel raceways
- Running surface smooth to Ra 0.8µm

Dimensions

UtiliTrak® Size	PW Part No.	SW Part No.	H	J	K	L Max[1]	M	N Dia x Depth (Counterbore)	O (Mounting Hole)	P
0	UTTRA0	-	11	4	20	3600	See formula below	8.3 x 3	4.8	80
1	UTTRA1	UTTRS1	15	4	26	3600		9.8 x 2.8	5.8	80
2	UTTRA2	UTTRS2	19.7	4.5	40	3600		14.3 x 3	8.8	80
3	-	UTTRS3	30	8	58	3600		14.3 x 5	8.8	80

Weights

UtiliTrak® Size	Channel Weight (kg/m)	Wheel Carriage Weight (g)	Channel Weight (kg/m)	Wheel Carriage Weight (g)
	PW Series		SW Series	
0	0.29	47	-	-
1	0.43	94	1.33	121
2	0.8	246	2.47	320
3	-	-	5.36	910

To Calculate M:

Step 1: Calculate number of hole spaces

$$\frac{\text{Length (in mm)} - X}{80} = \text{\# of hole spaces (round down to nearest whole number)}$$

X = 14 (size 0)

X = 16 (size 1)

X = 18 (size 2)

X = 20 (size 3)

Step 2: Calculate M

$$\frac{\text{Length} - (\text{\# of spaces} \times 80)}{2} = M \quad \text{(Note 4)}$$

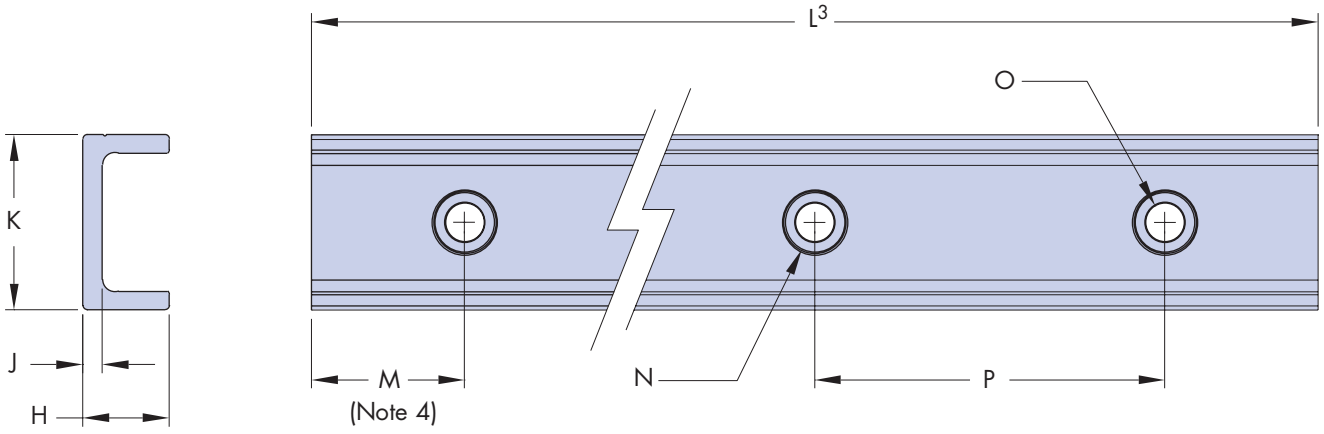

Notes:

1. "L" is maximum one piece length.
2. For ordering add length in mm after Part Number Ex. UTTRA0-1000 (one metre length).
3. Overall length +/- 2 mm.
4. Customer to advise 'M' dimensions when ordering, otherwise end hole position will be equal at both ends.

www.bergab.ru

SW Series 4 and 5-Wheel Carriage Assemblies

- Vee style extended carriage for SW Series steel channel
- UtiliTrak's® highest load capacity
- Larger surface area

Dimensions

UtiliTrak® Size	4-Wheel[1] Part No.	5-Wheel[1] Part No.	A	B	C	D	E Socket Size	F	G
1	UT1WPA-4A	UT1WPA-5A	166.5	24	26.3	8.8	10	35	M6x1
2	UT2WPA-4A	UT2WPA-5A	224.2	38	35	11.8	13	45	M8x1.25
3	UT3WPA-4A	UT3WPA-5A	317.3	55	50	15.8	15	60	M10x1.5

All dimensions in mm

Load Capacity (Max)

UtiliTrak® Size	Radial F_R	Axial F_A	M_P	M_Y	M_R	C	Radial F_R	Axial F_A	M_P	M_Y	M_R	C
	4-Wheel Carriage						5-Wheel Carriage					
1	2440	862	18	45.8	9.8	5600	2900	1014	18	45.8	12.6	6650
2	5300	1770	58	150	31.8	10200	6300	2080	58	150	40.9	12110
3	11800	6122	229	519	165.2	21600	14040	7140	229	519	212.4	25650

Loads in N, Moment loads in Nm

Weight

UtiliTrak® Size	SW Series Only	
	4-Wheel Carriage Weight (g)	5-Wheel Carriage Weight (g)
1	163	181
2	479	543
3	1370	1533

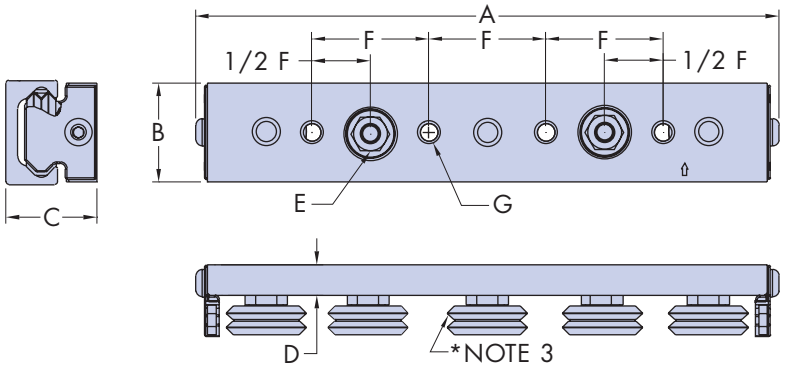

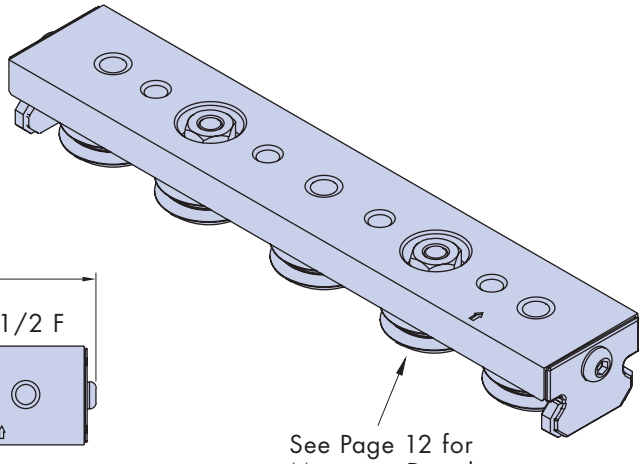

See Page 12 for Mounting Details

Notes:

1. SW series comes standard with shielded wheels, for wheels with Nitrile seals add "X" to the Part number as follows: UT1WPA**X**-4A, UT2WPA**X**-5A, etc.
2. See page 13 for Load / Life formulas.
3. This wheel omitted on 4-wheel assemblies.
4. See page 12 for mounting orientation.

www.bergab.ru

SW Series Crown Roller 4 and 5-Wheel Carriage Assemblies

- Crown roller style extended carriage for SW Series steel channel
- UtiliTrak's® highest load capacity
- Larger surface area

Dimensions

UtiliTrak® Size	4-Wheel[1] Part No.	5-Wheel[1] Part No.	A	B	C (Min-Max)	D	E Socket Size	F	G
1	UT1WPAR-4A	UT1WPAR-5A	166.5	24	25.3 - 27.6	8.8	10	35	M6x1
2	UT2WPAR-4A	UT2WPAR-5A	224.2	38	34.7 - 37.4	11.8	13	45	M8x1.25
3	UT3WPAR-4A	UT3WPAR-5A	317.3	55	46.9 - 53.4	15.8	15	60	M10x1.5

All dimensions in mm

Load Capacity (Max)

UtiliTrak® Size	Radial F_R	Axial F_A	M_P	M_Y	M_R	C	Radial F_R	Axial F_A	M_P	M_Y	M_R	C
	4-Wheel Carriage						5-Wheel Carriage					
1	2440	0	0	45.8	0	5600	2900	0	0	45.8	0	6650
2	5300	0	0	150	0	10200	6300	0	0	150	0	12110
3	11800	0	0	519	0	21600	14040	0	0	519	0	25650

Loads in N, Moment loads in Nm

Weight

UtiliTrak® Size	SW Series Only	
	4-Wheel Carriage Weight (g)	5-Wheel Carriage Weight (g)
1	195	220
2	522	598
3	1478	1665

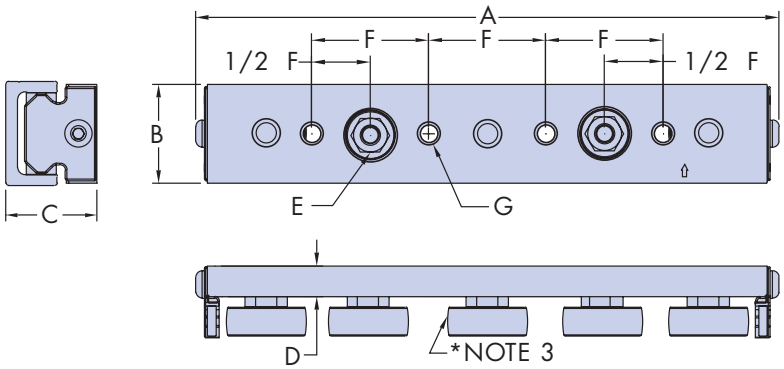

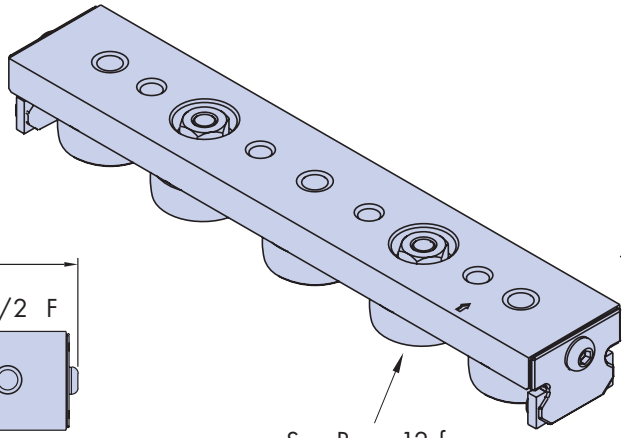

See Page 12 for Mounting Details

Notes:

1. Carriages come standard with shielded wheels, for wheels with Nitrile seals add "X" to the Part Number as follows: UT1WPA**X**R-4A, UT2WPA**X**R-5A, etc.
2. See page 13 for Load / Life formulas.
3. This wheel omitted on 4-wheel assemblies.
4. See page 12 for mounting orientation.

www.bergab.ru

CR Series 3-Wheel Carriage Assembly

- Vee style carriage assembly for stainless steel composite (CR Series) channel
- 440C stainless steel, corrosion resistant
- Available in 3-wheel assembly only

Dimensions

UtiliTrak® Size	Part Number	A	B	C	D	E Socket Size	F	G
1	UTCCA1-SS	100	38	28	10.1	7	40	M6x1
2	UTCCA2-SS	125	55	36	13.7	13	45	M8x1.25
3	UTCCA3-SS	170	80	50	19.6	17	60	M10x1.5

All dimensions in mm

Load Capacity (Max)

UtiliTrak® Size	Radial F_R	Axial F_A	M_P	M_Y	M_R	C
1	1111	705	14	21	3	1625
2	2671	1749	40	61	9	3900
3	5739	4763	146	176	35	8400

Loads in N, Moment loads in Nm

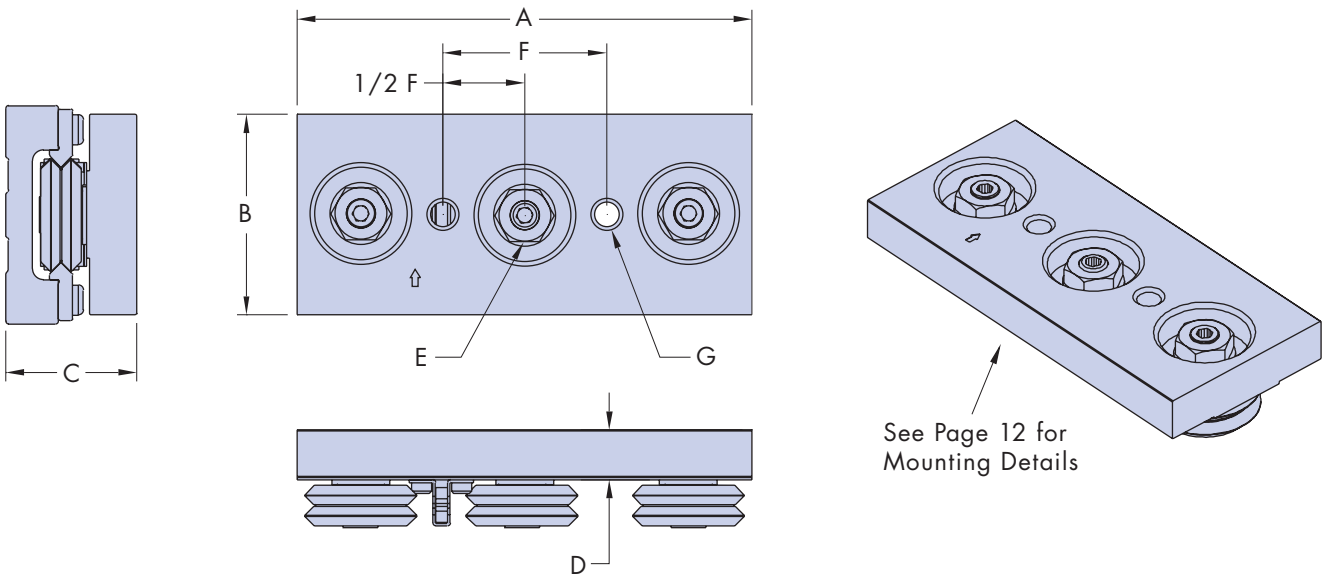

Notes:

1. Clean room or high temperature guide wheel options are available. Contact HepcoMotion for a quotation.
2. Direction of arrow on carriage plate indicates how the load should be oriented to achieve radial loading on the two concentric guide wheels.
3. For clean room/high temperature compatible guide wheels, add "-227" to the end of the Part Number.

www.bergab.ru

CR Series Stainless Steel Channel Assemblies

- Matched component for CR Series wheel carriage assemblies
- Induction heat treated 420 stainless steel DualVee® track mounted to an extruded aluminum channel
- Corrosion resistant
- Several standard lengths to choose from

Dimensions

UtiliTrak® Size	Part Number[2]	H	J	K	L Max	M	N Dia x Depth (Counterbore)	O (Mounting Hole)	P
1	UTCTPA1-length-SS	17.7	5.9	40	3490	45	18.8 x 2	6.9	100
2	UTCTPA2-length-SS	21.5	7.3	60	3390	45	25.4 x 3	8.8	150
3	UTCTPA3-length-SS	29.5	9.0	85	3415	82.5	28.6 x 5	10.5	250

All dimensions in mm

Standard Lengths (mm)

Size 1	Size 2	Size 3
190	240	415
290	390	665
390	540	915
490	690	1165
590	840	1415
690	990	1665
790	1140	1915
890	1290	2165
990	1440	2415
1090	1590	2665
1990	2190	2915
2990	2790	3165
3490	3390	3415

Weight

UtiliTrak® Size	Channel Weight (kg/m)	Carriage Weight (g)
1	1.457	136
2	2.591	385
3	4.884	1107

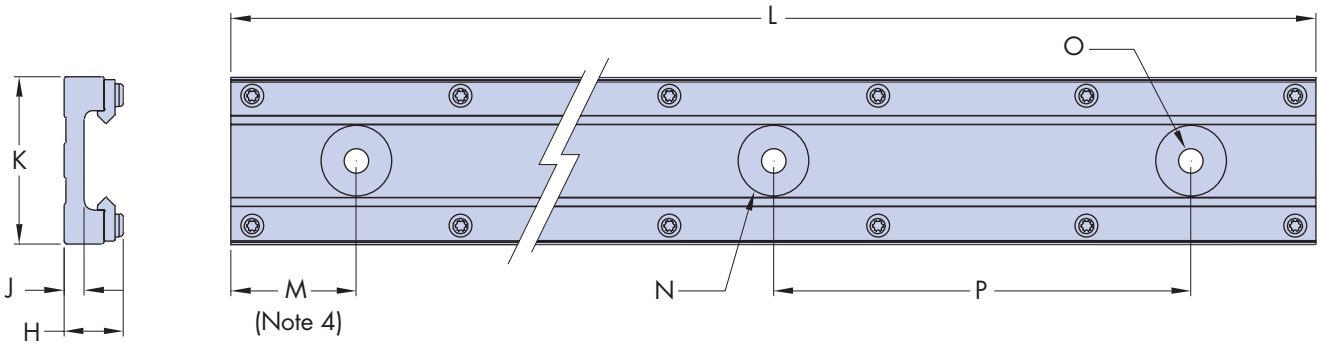

Notes:

1. Contact HepcoMotion for quotation on non-standard channel lengths.
2. "length" equals channel length in mm in the middle of the UT channel Part Number.
3. Channel length tolerance is ± 2 mm.
4. Customer to advise 'M' dimensions when ordering, otherwise end hole position will be equal at both ends.

www.bergab.ru

System Adjustment

Carriage adjustment is pre-set at the factory, but is easily field adjusted by rotating the eccentric guide wheels. This allows modification of running characteristics such as friction and breakaway force.

1. Adjustment should be performed while the carriage is engaged with the channel.
2. Looking down on the top of the carriage, as shown in Fig. 1, the eccentric stud is locked into place with a hex nut.

Fig. 1

3. Loosen the eccentric wheel/stud assembly by turning the hex nut counter-clockwise with a socket wrench.
4. When the wheel/stud assembly is loose enough, it can be rotated with a wrench, as shown in Fig. 2. Rotating the eccentric wheel's stud will adjust the wheel location into or out of mesh with the channel.

Fig. 2

5. Begin with a small adjustment to the setting and re-tighten the stud by turning the hex nut clockwise. If the setting is too loose, the carriage will exhibit excessive play, such as rocking. If the setting is too tight, the carriage will exhibit excessive friction. Move the carriage up and down the entire channel length to ensure that it does not feel too loose or tight at any given location along the channel. It may take a couple of attempts to find the proper setting for your system. Take care not to over preload PW Series polymer wheel carriages. It is important that the carriage setting is correctly adjusted prior to operation.

Mounting Details

The UtiliTrak® Vee guide assembly can be employed to accept loads in all orientations. However, it is primarily intended to support loads in the radial plane (F_R). As such, it is good engineering practice to orient the slide such that the two outside wheels support the load radially. Each carriage assembly includes an arrow pointing towards the optimal direction of load orientation. Loads oriented in this direction will produce a radial load on each of the concentrically mounted (outer) guide wheels.

The crown roller assembly should be subjected to radial loads only.

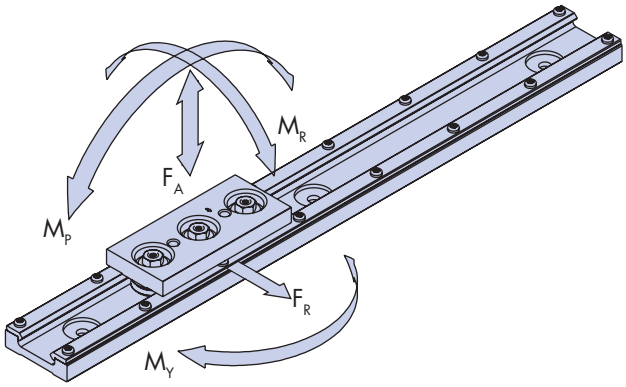

Close-up of UtiliTrak® carriage. Arrow indicates optimal direction of load orientation.

www.bergab.ru

Load Capacity

The load capacity ratings in this guide are based on 100km (4 million inches) of service life. As with any linear bearing technology, UtiliTrak® sizing should be done conservatively. If the guide selection is such that load capacities are marginal, it may be appropriate to consider the next larger size. Our applications engineers are available to assist with the evaluation of any application specific loading parameters.

Lubrication

The recirculating elements within DualVee® guide wheels are permanently lubricated and sealed against the operating environment. The contact surfaces between the wheel and channel, however, require lubrication to maximize the life and speed capacity of the guide. All UtiliTrak® carriages come complete with lubricators, consisting of an oil saturated felt within a housing. Lubricators should be periodically checked and re-oiled to ensure that a sufficient coating of lubricant is maintained on the channel guideway surfaces.

Accuracy

The precision of UtiliTrak® is defined differently than typical recirculating ball guides. These are designed primarily for "high end" positioning applications, such as machine tool guideways, Cartesian coordinate robotics and precision XY inspection equipment. These guides are more rigidly defined in terms of the running parallelism of carriages to rail, and are measured as a function of rail length. Their higher cost can be attributed to the grinding and finishing operations necessary to achieve these tight tolerances.

UtiliTrak®, in contrast, has been developed for "lower end" transport applications. The definition of accuracy in this class of guide is independent of channel length, and is measured solely by the parallelism maintained between the critical channel surfaces, which does not vary by more than 0.05 mm (.002") over the entire length of the channel.

As with any linear guide, installed accuracy is directly related to the straightness and flatness of the surface to which it is mounted. Because the guide will conform to the mounting surface, it is important for that surface to be more rigid than the UtiliTrak® channel.

Load/Life Calculations

The summation of applied loads divided by system load capacities (Max) should be less than or equal to one:

$$L_F = \frac{F_R}{F_{R(MAX)}} + \frac{F_A}{F_{A(MAX)}} + \frac{M_R}{M_{R(MAX)}} + \frac{M_Y}{M_{Y(MAX)}} + \frac{M_P}{M_{P(MAX)}} \leq 1$$

The applied force on the system is equivalent to:

$$F = F_{R(MAX)} * L_F$$

With an equivalent applied load, the system life can now be calculated:

$$L_{km} = 100 * \left(\frac{C}{F} * \frac{1}{f_c} \right)^3$$

L_{km} = System life in kilometres
C = System Dynamic Load Rating
F = Equivalent Load
f_C = Correction Factor

Correction Factor Table

Environmental Factor	Correction Value f_C
No Shock, No Vibration, Clean Working Environment, Below 1metre/sec	1.46
Light Shock, Light Vibration, Between 1 metre/sec to 2 metres/sec	1.85
Shocks, Vibrations, Harsh Environment, Above 2 metres/sec	3

www.bergab.ru Берг АБ prom@bergab.ru Тел.(495)-223-30-70,факс (495) 223-3071

HepcoMotion® Product Range

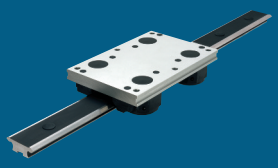

GV3
Linear Guidance and Transmission System

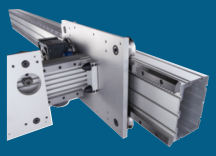

HDS2
Heavy Duty Slide System

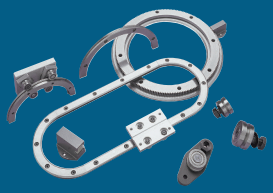

PRT
Ring Slides and Track System

HDRT
Heavy Duty Ring Slides and Track System

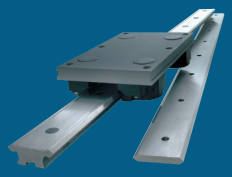

SL2
Stainless Steel Based Slide System

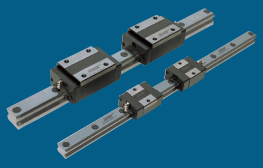

LBG
Linear Ball Guides

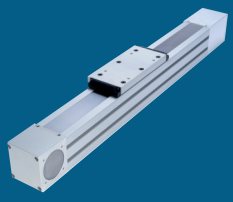

SBD
Sealed Belt Drive

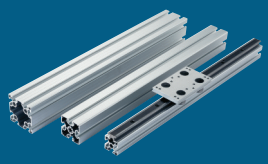

MCS
Aluminium Frame and Machine Construction System

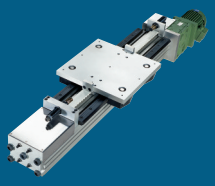

HDLS
Heavy Duty Driven Linear System

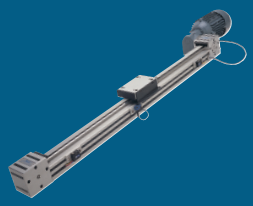

DLS
Linear Transmission and Positioning System

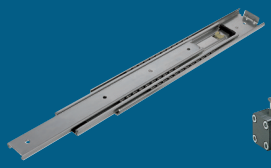

HTS
Telescopic Ball Bearing Slides

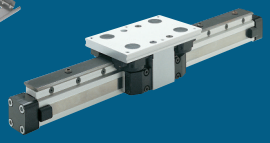

HPS
Powerslide-2 Guided Rodless Cylinder

MHD
Heavy Duty Track Roller Guidance System

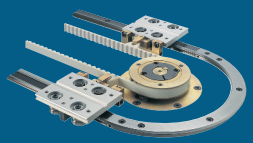

DTS
Driven Track System

BSP
Ballscrew Premier

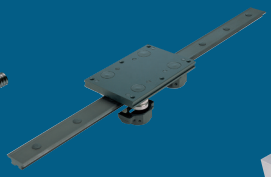

Simple Select®
Vee Slide Linear Guidance Systems

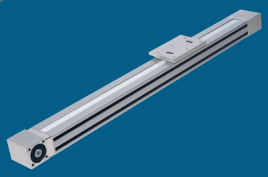

PDU2
Profile Driven Unit

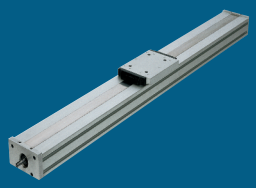

PSD120
Profile Screw Driven Unit

Bishop-Wisecarver Product Range

HepcoMotion® – Exclusive European partners and distributors for Bishop-Wisecarver since 1984.

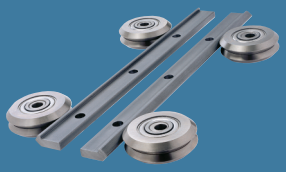

DUALVEE®
Single Edge Slide System

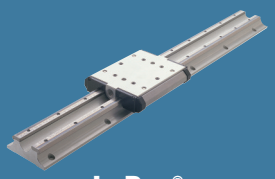

LoPro®
Aluminium Based Slide System

UtiliTrak®
Lightweight U Channel Guideway

For further information on HepcoMotion® products – please request our leaflet 'FPL'

HEPCO®
www.HepcoMotion.com

BISHOPWISECARVER®

HepcoMotion®
Lower Moor Business Park, Tiverton Way, Tiverton, Devon, England EX16 6TG
Tel: +44 (0)1884 257000 Fax: +44 (0)1884 243500
E-mail: sales@hepcomotion.com

CATALOGUE No. UT 05 UK © 2009 Hepco Slide Systems Ltd.

Reproduction in whole or part without prior authorisation from Hepco is prohibited. Although every effort has been made to ensure the accuracy of the information in this catalogue, Hepco cannot accept liability for any omissions or errors. Hepco reserves the right to make alterations to the product resulting from technical developments.

Many Hepco products are protected by: Patents, Copyright, Design Right or Registered Design. Infringement is strictly prohibited and may be challenged in law.The Customer's attention is drawn to the following clause in Hepco's conditions of sale:

'It shall be the Customer's sole responsibility to ensure that goods supplied by Hepco will be suitable or fit for any particular application or purpose of the Customer, whether or not such application or purpose is known to Hepco. The Customer will be solely responsible for any errors in, or omissions from, any specifications or information the Customer provides. Hepco will not be obliged to verify whether any such specifications or information are correct or sufficient for any application or purpose.'

Hepco's full conditions of sale are available on request and will apply to all quotations and contracts for the supply of items detailed in this catalogue.

HepcoMotion is the trading name of Hepco Slide Systems Ltd.

INVESTOR IN PEOPLE

ISO 9001