Large Bearing Design Manual and Product Selection Guide

KAYDON™

TURNING IDEAS INTO ENGINEERED SOLUTIONS

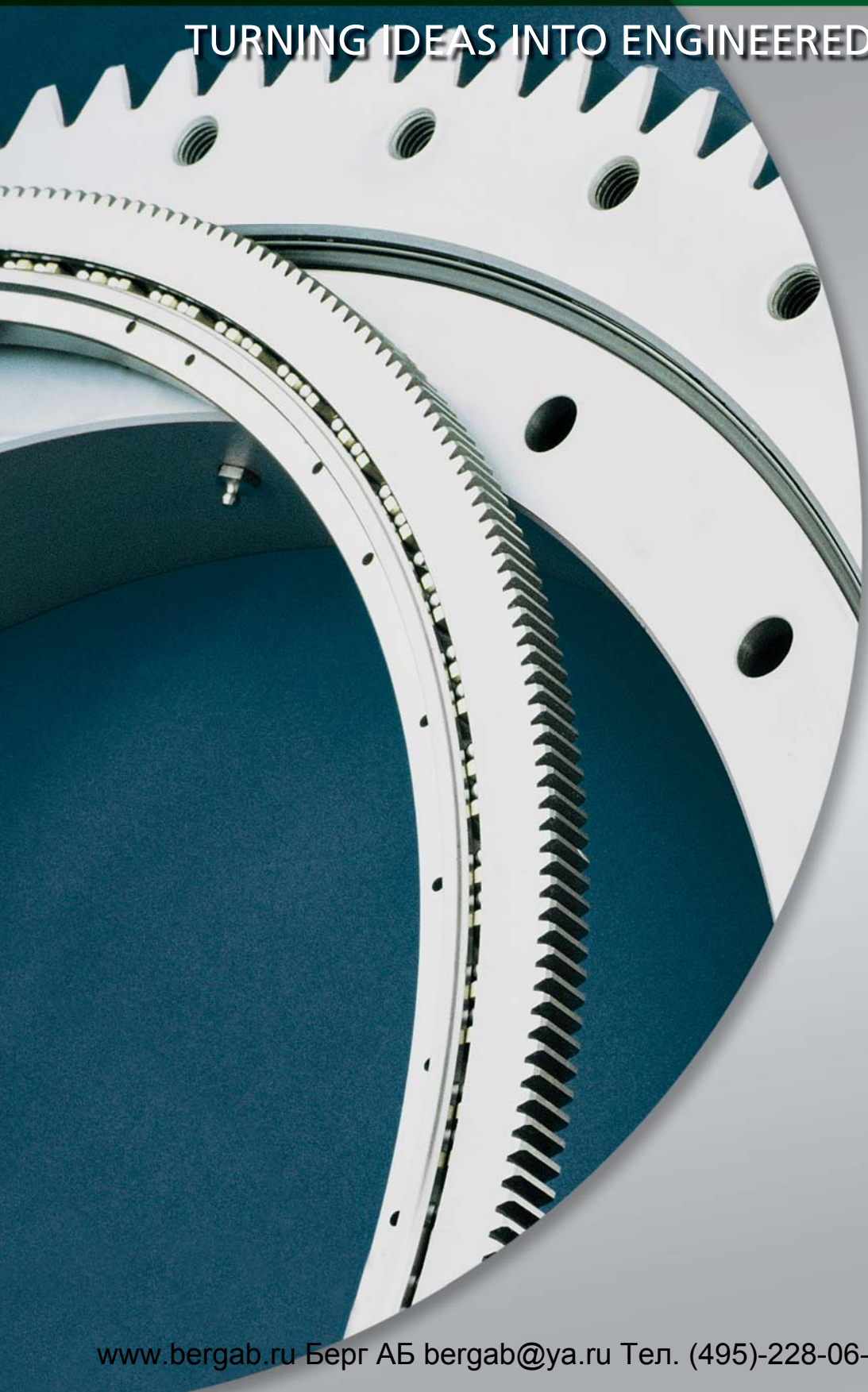

www.kaydonbearings.com

www.bergab.ru Берг АБ bergab@ya.ru Тел. (495)-228-06-21, факс (495) 223-3071

Table of Contents

Page Number

Introduction

Kaydon Capabilities

Kaydon has been America's leading producer of large diameter custom bearings since its founding in 1941. Manufacturing operations have expanded steadily to meet ever growing market needs since 1976.

Kaydon manufactures bearings up to 180 inches outside diameter using the most modern facilities and equipment in the industry. Continuing expansion and manufacturing versatility have led to our position as the leading supplier of all types of large diameter combination load bearings. Kaydon is unique in the breadth of product capabilities offered, always striving to match the best bearing type with your application needs.

Standard bearings

Kaydon's long history of serving the needs of equipment and manufacturers has resulted in two series of standard bearings to fit many common application needs. The **RK-Series** of lightweight turntable bearings have proven capable of satisfying many requirements at moderate cost—with the advantages of short lead time or stock availability. The new, expanded **MT-Series** of standard turntable bearings combine quick delivery with maximum capacity and value to fit an even wider variety of applications. Many other bearings shown in this catalog are produced on a regular basis and offer short lead time at moderate cost.

Custom bearings

While other manufacturers may specialize in one or two specific bearing types, Kaydon's broad experience and capabilities allow us to match the product to your requirements—not ours. Where a special need exists, Kaydon can fill it without sacrificing system performance. Often, we can supply bearings which fill the need with minimal alteration or additional costs to the design. For truly unique applications, our fully staffed engineering department can design the optimum solution.

Bearing types

- **Four-point contact ball bearings,** as well as Kaydon's patented 8-point contact ball bearings, are used as swing bearings in cranes, excavators, aerial platforms and other types of construction and material handling equipment. These bearings have also been applied successfully in machine tools, radar and medical equipment.
- **Biangular roller bearings** are used in applications demanding higher precision and stiffness but requiring less static load capacity, such as index tables, positioners, antenna mounts and military gun turrets.
- **Inserted raceway–WireX®–bearings** with single, double or triple rows offer important weight savings advantages and are found in high performance applications such as military vehicle turrets.
- **Plastic ball 4-point contact and angular contact thrust bearings** are also available for specialized applications.

Total capabilities

Kaydon offers the bearings to fit your needs. Ball and roller types in single and multi-row designs. Solid or inserted wire raceways. Geared raceways, both internal and external. Bearings for radial, thrust, moment and combined loading. Capacities, materials, seals and configurations to fit a variety of applications. And the design and application engineering service that has tailored the best bearing values to the world's toughest bearing applications.

If you don't see what you want in this catalog, call us at (231) 755-3741. We will be glad to supply technical assistance, lead time information and quotations on bearings to fill your requirements or specifications.

Precision

Many devices, such as machine tool tables and radar antennas, require a high degree of accuracy and are dependent upon the bearings to achieve it. A single four-point contact ball or biangular roller bearing is ideal for these applications. Integral gears and mounting holes reduce the number of components and tolerance buildup, resulting in maximum accuracy and simplification of design. Early consultation with Kaydon can be invaluable in determining the optimum bearing and mounting.

The bearings listed in this catalog are manufactured to a standard precision suitable for many commercial applications, but Kaydon also manufactures bearings of higher precision. The engineering principles discussed in the manual also apply to bearings of any precision level.

Bearings with radial and axial runouts of less than .0002 inches T.I.R. and gears of AGMA Class #10 or better can be furnished. Where extreme rigidity is required, very high spring rates can be maintained. Kaydon achieves these results through the use of modern precision equipment, experienced personnel, and specially developed manufacturing techniques.

Combined with other features of large diameter bearings—high load capacity, small space requirement, large center hole, grease lubrication, and ease of installation, high precision and rigidity make possible greatly improved performance in such applications as:

- Grinding machines
- Turning and boring machines
- Index tables
- Scientific and medical instruments
- Radar, height finders, positioners and gun directors
- Ocular and radio telescopes
- Logging machinery
- Material handling equipment

Bearing Design Features

Whether used in heavy-duty off-road vehicles, precision medical equipment or high accuracy military radars, large diameter Kaydon bearings share many design features. There are important differences however, which often dictate the optimal bearing selection for a given application. These pages outline the primary features of each bearing type.

Turntable bearing advantages

Over the years demands have increased for equipment economy, performance, and reliability. As a result, four-point and eight-point contact ball bearings have replaced the older, less efficient hook rollers and kingpost assemblies. Turntable bearings provide smooth rotation and high radial, thrust and moment load capacity in a compact dimensional envelope. With a Kaydon turntable bearing there is no need for a center shaft or kingpost, so the bearing center space is open and available for hydraulic piping or conduit runs.

Additionally, turntable bearings incor-porate many special features such as integral gearing, through-drilled or tapped mounting holes and contact seals. These features simplify the job of the equipment designer, lower manufacturing costs, and facilitate system maintenance.

Importance of proper selection, installation and use

Turntable bearing applications are typified by heavy loading and slow, intermittent or partial rotation.

Bearing failure is therefore seldom due to classic rolling contact fatigue. In other words, calculated bearing life is not usually a major consideration in turntable applications, especially in construction equipment.

Turntable bearings are usually selected on the basis of static load capacity, suitable integral gearing, and other special features. Turntable bearing failure is often the result of practical considerations not covered by classical rolling bearing theory—such as nonuniform support structure design, lack of lubrication, improper selection or application of fasteners, overloading beyond equipment specifications, and other abuses.

The purpose of this manual is to provide guidelines for system design and turntable bearing application, and to caution equipment designers and users of one principle: Large-diameter bearings are not commodity products. Each bearing is a custom design or a custom application of an existing bearing design. In either case, the bearing manufacturer should be involved in the design stage.

Four-point contact ball bearings

Four-point contact ball bearings can accept combinations of radial, thrust and moment loads. This is possible due to the unusual geometry of the raceways (or ball grooves). The ball groove in each race has two radii that are larger than the ball radius. The centers of these two radii are offset from the center of the ball radius. This results in a "Gothic Arch" configuration in each of the raceway grooves, making it possible for the two grooves to contact the ball at four points.

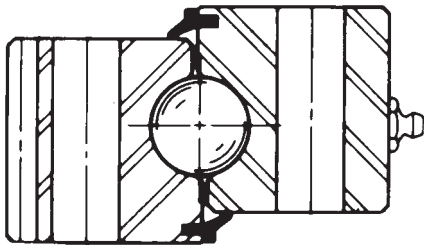

High thrust and moment capacity is obtained in a four-point contact ball bearing by its deep raceway grooves. These allow high initial contact angles between the balls and raceways and increase the thrust and moment capacity. The deep grooves also accommodate the contact angle increase which results from ring stretch and ball deflection under load.

Precision grinding of raceways is necessary to control accuracy of contact angles, close ball to raceway conformity, diametral clearance and raceway finish. These design features, along with proper material selection, assure the proper function of the four-point contact ball bearing.

Eight-point contact ball bearings

The eight-point contact ball bearing was developed by Kaydon to satisfy requirements for maximum load capacity within a given envelope, especially in larger size bearings.

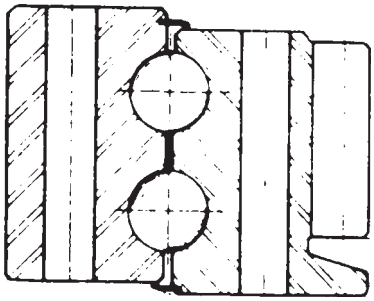

As shown below the eight-point contact ball bearing is an annular bearing with two rows of balls. The unique feature of this bearing lies in the utilization of the "Gothic Arch" or four-point contact internal geometry in both rows.

Functionally, the bearing may be considered to be two single row, four-point contact bearings with adjacent faces.

The four points of contact permit each row of balls to accept radial, axial, or moment loads, or a combination of the three. Through precise grinding techniques, raceways are closely matched for parallelism and size, providing a high degree of load sharing between rows. Test results have confirmed that the second row of balls provides and additional 80% capacity over that provided by a single row.

Biangular roller bearings

Biangular roller (cross roller) bearings will support the same types of load as the four-point and eight-point contact ball bearings.

To accomplish this universal load carrying capability, the bearing is designed with V-groove raceways, providing two roller paths in each ring. The rollers have a length slightly less than their diameter and are positioned so that adjacent rollers contact different sets of raceways, with the axes at right angles to each other. Positioned in this manner the rollers transmit load along perpendicular sets of 45° contacts. The action of the bearing under various types of loading is thus analogous to that of the four-point contact ball bearing.

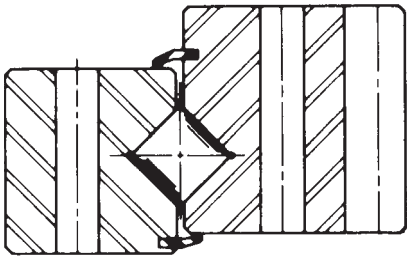

While a roller of length and diameter approximating a given diameter of ball has more load carrying capacity, the static thrust and moment capacity of a biangular roller bearing is less than that of a four-point contact ball bearing of comparable size. The reason for this is that only alternate rollers resist a uni-directional axial load. In some cases, capacity in one axial direction may be increased by orienting more rollers along one axis than the other, with a resulting decrease in capacity in the opposite direction.

The main advantages of biangular roller bearings are greater stiffness and consequent superior spring rate, as well as tolerance of mounting surface irregularities and resulting deflections. When deflection under load must be minimized, or when bearing turning torque is critical this bearing may be given preference over a four-point contact ball bearing.

WireX® inserted raceway bearings

WireX® bearings are generally used in applications requiring maximum weight reduction and corrosion resistance. They are generally custom designed to support specific combinations of radial, thrust and moment loads. Gear teeth can be cut in the inner or outer ring, and bolt holes provided for mounting.

The bearing rings have machined seats to position the inserted wire raceways, which are held in place by bearing loads transmitted through the rolling elements. The rolling elements (usually rollers) and wires are usually made of stainless steel.

Bearing rings can be made of many different materials. When aluminum is used the complete bearing can be made of corrosion resistant material and may result in weight savings of up to 50%. The use of aluminum rings may also eliminate thermal expansion problems when the bearing is mounted to aluminum structures.

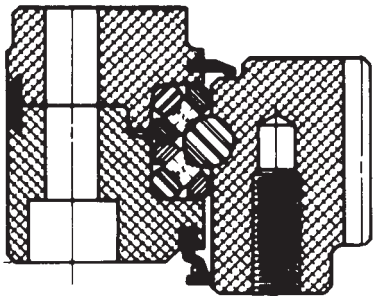

Another advantage of WireX® bearings is their high tolerance of non-rigid and out-of-flat mounting structures. Irregularities can be accommodated by the free movement of the wire inserts in their circular seats.

WireX® bearings can often be rebuilt—a substantial savings when compared to complete bearing replacement.

Three-row roller bearings

Three-row roller bearings offer the highest capacity, using three separate rows of rollers. The top and bottom rows absorb thrust loading, each row in the opposite direction, and operate together to handle moment loading. The intermediate row handles radial loads. Because each row is independent, frictional torque is low.

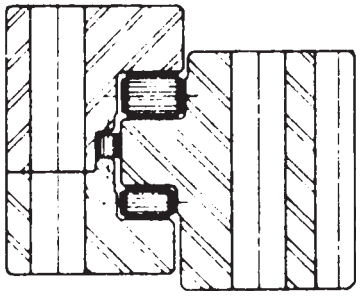

Plastic ball bearings

Large diameter bearings with plastic balls are provided for light duty, low load applications. Raceways are V-grooves machined in aluminum or steel bearing rings.

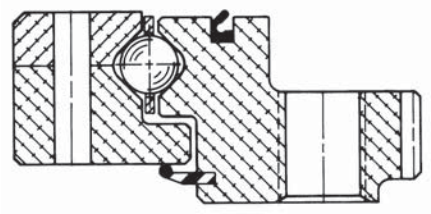

These bearings tolerate mounting distortions well, operate with low torque, and are relatively inexpensive. They are capable of handling radial, thrust and moment loads. Trade-offs include reduced load capacity and positional accuracy.

Bearing Overview Selection Guide

General Description	Typical Cross Section	Rolling Element	Outside Diameter	Gear Options	Maximum Capacity			Typical Applications
					Moment (ft.-lbs.)	Thrust (lbs.)	Radial (lbs.)	
Four-Point Contact Ball	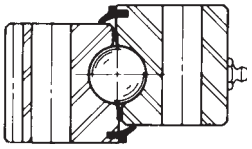	Ball		•Non-geared •Internal •External				Machine Tools Aerial Devices Medical Equipment Radar Cranes Utility Cranes Excavators
Custom (pg. 16-17)			16" to 180"		10,000,000	6,000,000	1,300,000	
MT-Series (pg. 12-13)			12" to 48"		900,000	600,000	200,000	
RK-Series (pg.14-15)			20" to 47"		140,000	175,000	60,000	
Lightweight Four-Point Contact (pg. 22)	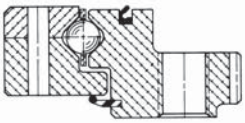	Plastic Ball	To 60"	•Non-Geared •Internal •External	Consult Kaydon			Military Turrets Medical Equipment General Purpose
Eight-Point Contact (pg. 18-19)	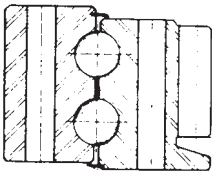	Ball	To 180"	•Internal •External	15,000,000	9,000,000	2,000,000	Large Cranes Excavators Marine Cranes Severe Environment
KH Series Precision Bearing Assemblies (pg. 20-21)	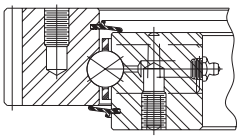	Ball	20" to 32"	•Non-Geared •External	40,000	43,000	20,000	Precision Indexing Rotary Tabes

Customization

Most of the bearing designs shown on these pages can be produced with user-defined options, including but not limited to special paints and platings, low temperature stabilization and special cages for high speed and horizontal mountings.

Precision

Precision gears, runouts, preloads and torque control are available to suit specific applications. AGMA Class 6 gears are standard, gears up to AGMA Class 12 can be supplied on request.

General Description	Typical Cross Section	Rolling Element	Outside Diameter	Gear Options	Maximum Capacity			Typical Applications
					Moment (ft.-lbs.)	Thrust (lbs.)	Radial (lbs.)	
Biangular Roller (pg. 22)	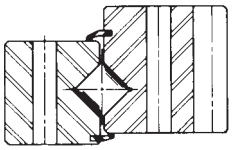	Roller	To 180"	•Internal •External	7,000,000	3,000,000	1,400,000	Radar Military turrets Machine tools Excavators
Lightweight Biangular Roller (pg. 22)	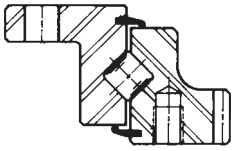	Roller	To 180"	•Internal •External	2,500,000	1,250,000	575,000	Military turrets
Three-Row Roller (pg. 22)	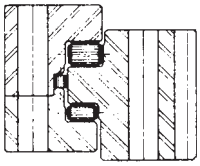	Roller	To 180"	•Internal •External	18,000,000	12,000,000	4,000,000	Radar Cranes Excavators Stackers & reclaimers Heavy mill equipment
Inserted Race WireX® (pg. 18-19)	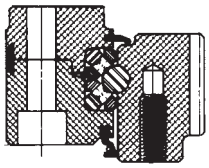	Roller	To 120"	•Non-Geared •Internal •External	1,820,000	1,000,000	370,000	Military turrets Radar
Inserted Race Biangular WireX® (pg. 22)	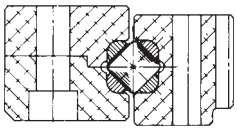	Roller	To 120"	•Internal •External	1,830,000	900,000	370,000	Military turrets Radar
Inserted Race Three-Row WireX® (pg. 18-19)	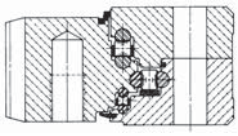	Roller	To 120"	•Internal •External	2,250,000	1,125,000	400,000	Military turrets Radar
Special Configuration (pg. 22)	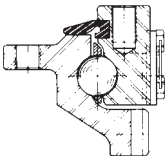	Ball	To 180"	Consult Kaydon for design and application engineering assistance with your specific custom bearing requirements.				

Application and Load Analysis

Many factors must be considered in selecting and applying an antifriction bearing. Chief among these are type and magnitude of loading, speed of rotation, and accuracy.

For most applications in construction and material handling equipment, load is the primary concern. Speed and accuracy are relatively unimportant but deserve consideration along with other items such as friction torque, gearing, and mounting. Other applications, such as precision medical equipment, require a high degree of accuracy and close control of torque, but have relatively low loading.

Load

Because a turntable bearing accepts all types of loading, the main concern with load is its magnitude. See Pages 9-11 for load determination and bearing selection.

Turntable bearings are designed primarily for dominant axial (thrust) and/or moment loading. In applications where radial load is significant or the dominant load, it may be advisable to use a bearing with a reduced contact angle. Radial load of a magnitude equal to 10% or less of the axial load may be neglected. For a tentative selection, radial load in excess of 10% may be converted to equivalent thrust load by using a multiplication factor of 5.

Speed

The application of a standard large-diameter bearing is normally limited to intermittent rotation at a maximum speed of 500 feet per minute at the pitch line (about 50 RPM for a bearing pitch diameter of 3 feet). Where continuous rotation under load occurs or the speed of rotation is greater than that recommended, the standard bearing design can be modified. This modification may include revisions in contact angle and manner of ball separation.

In applications where the speed of rotation is greater than 1100 feet per minute, a different type of bearing must be used.

Accuracy

Positioning of the rotating member relative to the stationary structure may be of concern. With the bearing races securely fastened in a round condition on flat mounting surfaces, the main source of positioning error is internal bearing clearance—bearing runouts being small by comparison. See Page 22.

Four-point contact bearings are furnished with sufficient internal clearance to allow for some imperfections of mounting surfaces and for small amounts of deflection under load. Bearings can be furnished with reduced internal clearance to minimize "rock." Extra care should then be taken to assure the installed bearings will be round and flat.

Friction torque

In most applications of large-diameter bearings the force required to overcome bearing friction is small compared to that required to overcome the inertia of the mass being supported—provided the bearing is properly mounted and contains the standard internal clearance. Bearing clearance is designed to minimize the possibility of tight spots resulting from ordinary imperfections in the mounting.

A bearing distorted by out-of-flat or out-of-round mounting surfaces may require a tremendous amount of turning torque. The same is true for a bearing mounted on a structure which deflects locally under load. Unfortunately, this phenomenon is not always recognized until actually experienced.

Other factors affecting bearing friction are bearing contact angle, separator and lubricant. A low torque requirement should be referred to Kaydon for special attention.

Gears

Gears furnished integral with turntable bearing races commonly have an AGMA Standard 20° full depth or stub tooth form the some provision for backlash.

Where required, however, modifications of the basic tooth forms and alternate pressure angles can be furnished. For additional strength or where surface hardening is required, a full-round fillet can be provided.

Safe tangential tooth loads are given for those bearings listed; however, it is recommended that the machine designer verify the adequacy of the gear for his application based upon his own methods of calculation and past experience.

Bearing and pinion mountings lacking in rigidity can result in tooth end loading under the heavier loads. Many designers find it desirable to crown the pinion to compensate for this undesirable effect.

*Mounting holes

The preferred method of attaching turntable bearings is to bolt through both races with full circles of equally spaced fasteners. It is recognized, however, that the design of the mating structures may dictate the use of special bolt patterns and that assembly procedures may require tapped holes. There is no objection to such mountings, providing it is determined by actual testing, as well as analysis, that the fasteners will have adequate strength to sustain the maximum moment loads possible. See Pages 26-27 for more on bolts.

Weld rings and weld bands

Welding offers an optional method of attaching one of the races of turntable bearings.

The bearing is furnished with a low carbon steel weld ring or band welded to the race. The ring can be welded to the machine without injury to the bearing, provided proper procedures and precautions are exercised.

While welding has certain advantages, it is inconvenient to effect major maintenance or replacement of the bearing if damage should occur.

*See warranty, page 33.

Seals

Seals are normally included in Kaydon large-diameter bearings and are recommended for bearing protection even where external seals or shields are provided. Gear protection is also important and should be considered when designing the bearing mount.

Loading hole

The rolling elements in Kaydon bearings may be inserted through a hole drilled radially through the ungeared race and then plugged. The area of the raceway interrupted by this hole is relieved to prevent it from receiving load. Whenever possible, however, the loading hole should be positioned out of the maximum load zones.

Lubrication

One or more grease fittings or lubrication holes are provided in all turntable bearings. Additional lube holes can be furnished on request. For further discussion of lubrication, see Page 26.

Mounting and installation

This topic is discussed in detail on Pages 25-31.

Normal application

Special attention must be given to bearing application whenever conditions are different from those considered normal. For a "normal application" of turntable bearings the following conditions should apply:

- Vertical axis of rotation
- Predominant thrust and moment loading
- Radial load not in excess of 10% of the thrust load
- Intermittent rotation with pitch line velocity limited to 500 FPM
- Operating temperature within -40°F to + 125°F
- Mounting surfaces machined and reinforced to limit deviation from a true plane to the amounts shown in Figures 40 and 41 on page 25
- Installation procedure to assure roundness of both races, such as by applying a centered thrust load while skip tightening the bolts
- Provision for periodic relubrication
- Provision for periodic checking of mounting bolts to verify their proper tightness

Basis for bearing load ratings

The bearings in this catalog are designed primarily for use in applications where applied loads may be high but speed of rotation is slow and operation is usually intermittent. In such applications, bearing fatigue life is of little concern and selection of the bearing may be based on its static rating.

Figure 1

Applied Forces
Thrust & Moment Loading

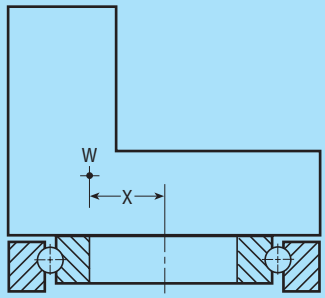

W = weight of mass supported in pounds
X = distance in feet from W to axis of rotation

Bearing Loads

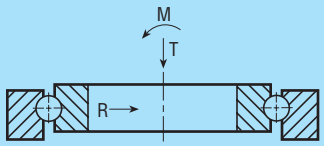

T = thrust or axial load = W in pounds
R = radial load = 0
M = moment load = W • X in pound-feet

Figure 2

Applied Forces
Radial & Moment Loading

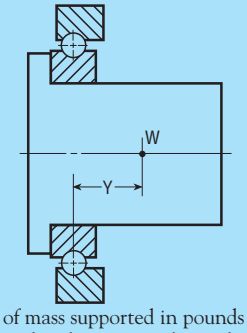

W = weight of mass supported in pounds
Y = distance in feet from W to plane of rotation

Bearing Loads

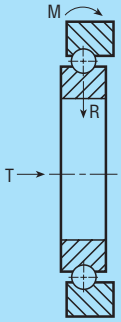

T = thrust or axial load in pounds = 0
R = radial load = W in pounds
M = moment load = W • Y in pound-feet

Figure 3

Applied Forces
Radial, Thrust & Moment Loading

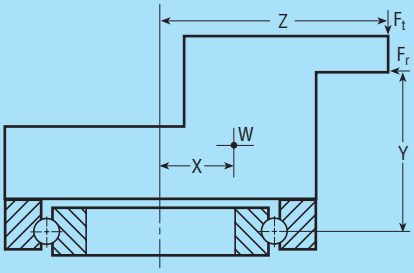

W = weight of mass supported in pounds
F_t and F_r = applied forces in pounds
X, Y, & Z = moment arms in feet

Bearing Loads

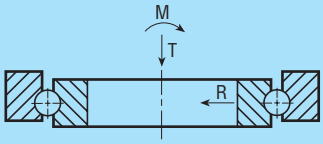

T = thrust or axial load = W + F_t in pounds
R = radial load = F_r in pounds
M = moment load = (W • X) + (F_t • Z)– (F_r • Y) in pound-feet

Static rating is defined as the maximum load which may be applied to the bearing while it is stationary without impairing the smoothness of subsequent operation.

Load rating curves are supplied for most bearings listed herein. These curves represent the maximum combined axial and moment loads which may be applied to the bearing. When selected from the curves for a crane or application with similar operating characteristics most bearings can be expected to last for the life of the machine if the loading used in the selection is based on the maximum machine rating. Use of the curves is explained under Selection Procedures.

Typical applied loads

To select a bearing for a given load condition, the actual bearing loads must be determined from the forces applied to the equipment in which the bearings will be installed. These forces will commonly be applied perpendicular to the axis of the bearing (radial force) or parallel to the axis (axial or thrust force). If not applied in either manner, the force can be resolved into components acting along similar lines.

Location of the applied forces relative to the bearing will determine the moment load on the bearing. Radial forces must be located relative to the plane of the rolling elements with axial forces located relative to the bearing axis.

Figures 1, 2, and 3 on the previous page illustrate typical applications of external forces and the resulting bearing loads.

Bearing load analysis

To determine the effects of combined loading, Kaydon uses a unique freebody analysis. This analysis was developed as part of a study of large diameter anti-friction bearings conducted for the Massachusetts Institute of Technology under a United States Air Force contract. As illustrated in Figures 1-3, the applied load system is converted to an equivalent force diagram, as shown below.

In this analysis the loaded race is considered to constitute a freebody in space acted upon by the applied loads and stabilized through the ball contacts by the other race.

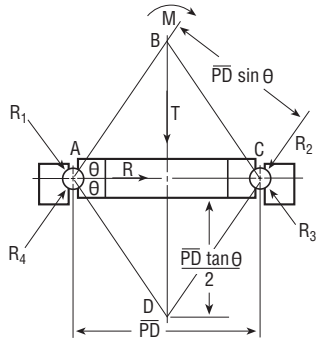

$\overline{PD}$ = ball pitch diameter
θ = contact angle
R_1, R_2, R_3, R_4, = bearing reactions

A plane is passed through the axis and the lines of action of the applied loads. For purposes of calculating the reactions R1, R2, R3, and R4, they are assumed to act only on the two balls whose centers are in the selected plane. Once the reactions are determined, the maximum reaction is assumed to be distributed over a limited number of balls based on the eccentric nature of the applied loads. The latter is determined from a comparison of the magnitudes of the reactions.

While four possible reactions are indicated, only three of these will occur due to bearing deflections under the applied forces. To solve for the reactions, one must be assumed equal to zero. The three remaining reactions are then determined by the summation of moments about points selected from A, B, C, and D. If one of the calculated reactions is found to be negative, the original assumption of the inactive reaction is incorrect and a new assumption must be made.

In general, bearings for construction, material handling, and similar types of equipment may be selected from the load rating curves. However, with radial load exceeding 10% of the thrust load is present, Kaydon should analyze all load data and recommend the bearing. Significant or dominant radial load may dictate the selection of a larger bearing or a modification of the contact angle.

A detailed Kaydon load analysis is also recommended for those applications in which there is an appreciable variation in the load and operating conditions, and maximum loading is infrequent. This analysis can result in selection of a smaller, more economical bearing than that selected on the basis of maximum loading only.

Calculated data includes maximum ball load, race size change, ball contact de-flection, change in contact angle, size of the contact area, stress in the contact area, subsurface shear stress, static factor of safety, dynamic factor of safety, and bolt factor of safety.

Selection procedure

1. Review preceding material, especially NORMAL APPLICATIONS before proceeding with selection.
   - For unusual conditions, consult a Kaydon representative.
   - For normal applications, proceed as follows.
2. Determine the preferred mounting arrangement-pinion and gear location, etc.
3. Determine the maximum bearing loads (see Figure 1-3). Consider all applied forces including work loads, wind loading on large superstructures, and gear loads if significant.
   - Consider the weights of all members of the structure supported by the bearing.
   - Where several possible combinations of load exist, calculate all conditions to assure inclusion of the maximum condition. A crane, for example, usually has a number of conditions of load versus working radius.
   - Multiply the calculated loads by the applicable service factor:

Application	*Service Factor*
MobileCrane	1.00
Excavator, Pedestal Crane	1.25
Logger	1.50

4. Refer to the list of bearings and their load rating curves. Pages 12-24. (Curves based on service factor = 1.00.)
5. Select a bearing on the basis of preferred mounting arrangement and maximum load condition.
   - A bearing has adequate capacity for any combination of loading which results in a point of intersection on or below its rating curves.
   - Check all load conditions in cases where an uncertainty exists as to which is the maximum condition.
   - In some cases there will be a choice of several bearings having the required load rating.
   - For maximum economy, select the bearing with the smallest diameter compatible with other requirements such as space limitations and location of the drive mechanisms.
6. Check capacity of the gear—see Pages 27-29.
7. Check capacity of the mounting bolts —see Pages 26-27.
8. Submit to Kaydon for engineering review.

Typical mountings

Kaydon bearings can be designed to suit a number of mounting arrangements. The six basic arrangements are illustrated below. These can be varied to suit requirements peculiar to a specific application. Such variations include types of holes, location and number of lube holes, omission of integral gear, incorporation of special seals, etc.

The mounting structures shown are intended to be illustrative only.

Important details in design such as mounting plate thickness, location and number of stiffening members, and bolt lengths must be determined by the equipment designer.

Refer to mounting instructions on pages 25-31.

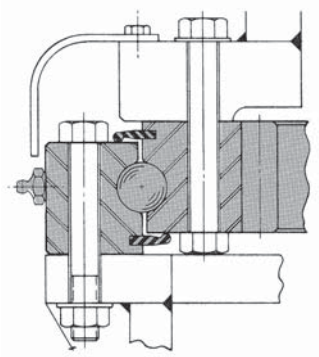

Figure 4
Pinion is attached to stationary outer race and rotates geared inner race carrying upper structure.

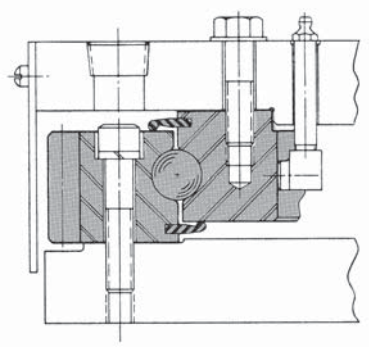

Figure 5
Pinion is attached to rotating upper structure carried by inner race.

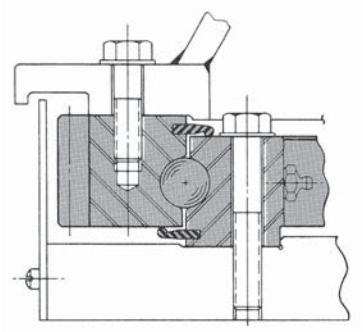

Figure 6
Pinion is attached to stationary inner race and rotates geared outer race carrying upper structure.

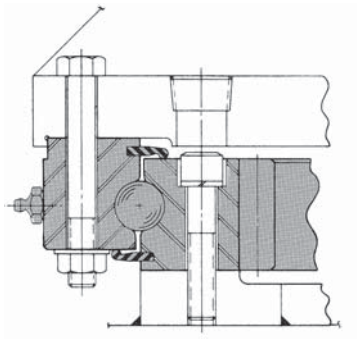

Figure 7
Pinion is attached to rotating upper structure carried by outer race.

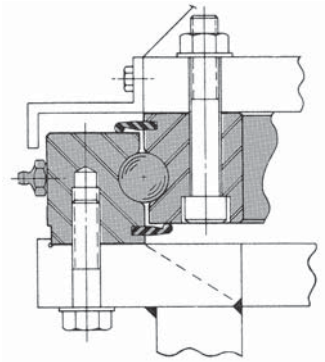

Figure 8
Upper structure rotates on inner race with drive separate from bearing.

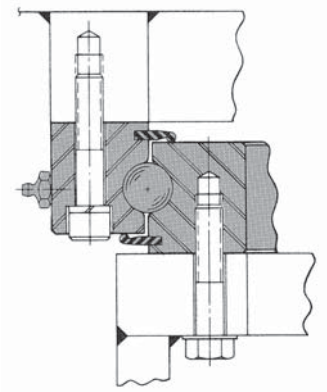

Figure 9
Upper structure rotates on outer race with drive separate from bearing.

MT-Series Bearing Selection Data

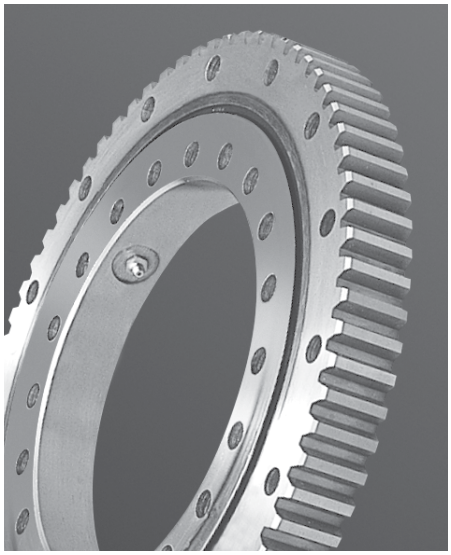

Kaydon's standard line of MT-Series small-bore turntable bearings are ideally suited for light to medium duty applications such as truck-mounted cranes, hoists and nonprecision industrial tables and positioners. With additional sizes now offered from 20" to 47" O.D., heavier duty applications can be served with a standardized bearing design.

MT-Series bearings are an economical replacement for kingpost designs and utilize the same four-point contact design concept as our heavier duty turntable bearings, providing exceptional radial, thrust and moment load capacities. They are available with or without external gears.

Precision manufactured versions of these standard bearings can be applied in machine tool, material handling, power transmission, radar and robotic applications. For additional information on runout control, gear precision, bearing preloading and special coatings availability please consult with Kaydon prior to selecting a bearing.

Table 1—Non geared MT Series (Figure 10)

Model No.	Kaydon P/N	Reference no.	Outline dimensions (inches)			
			OD	ID	W	TO/TI
MTO-145	13102	T7-9P1	11.811	5.709	1.968	1.732
MTO-145X	12700	T7-9P4	12.286	5.709	1.968	1.732
MTO-210•	11471	T7-11P1	14.370	8.268	1.575	1.496
MTO-210X	12710	T7-11P9	14.686	8.268	1.968	1.732
MTO-265	11473	T7-14P1	16.535	10.433	1.968	1.732
MTO-265X	12720	T7-14P9	17.086	10.433	1.968	1.732
MTO-324	11053	T8-17P1	20.486	12.750	2.062	2.000

Table 2—External gear MT Series (Figure 11)

Model No.	Kaydon P/N	Reference no.	Outline dimensions (inches)						
			OD	ID	W	TO	TI	OS	
MTE-145	13109	T7-9E1	12.286	5.709	1.968	1.732	1.732	.236	
MTE-145X	12600	T7-9E3	12.286	5.709	1.968	1.732	1.732	.236	
MTE-210•	11536	T7-11E1	14.686	8.268	1.575	1.496	1.496	.079	
MTE-210X	12610	T7-11E9	14.686	8.268	1.968	1.732	1.732	.236	
MTE-265	11487	T7-14E3	17.086	10.433	1.968	1.732	1.732	.236	
MTE-265X	12620	T7-14E14	17.086	10.433	1.968	1.732	1.732	.236	
MTE-324	11054	T8-17E	20.486	12.750	2.062	2.022	2.022	.040	
MTE-324X	12630	T8-17E28	20.486	12.770	2.375	2.063	2.063	.312	
MTE-415	12640	T8-20E5	24.650	16.250	2.375	2.063	2.063	.312	
MTE-470	12650	T8-22E10	26.900	18.500	2.375	2.063	2.063	.312	
MTE-540	12670	T8-25E1	29.650	21.250	2.375	2.063	2.063	.312	
MTE-590	12675	T10-28E1	33.534	23.125	2.875	2.563	2.563	.312	
MTE-705	12680	T10-32E3	38.201	27.750	2.875	2.563	2.563	.312	
MTE-730	12685	T12-35E3	41.850	28.750	3.250	2.880	2.880	.375	
MTE-870	12690	T14-40E6	47.444	34.250	4.250	3.875	3.875	.375	

Note: Bearings with suffix "X" in the model number provide additional load capacity. They will require 9/16" diameter fasteners.
*Fellows Stub
**USA Standard Stub

Table 2A—Mating Pinions for MT-Series Bearings (Figure 15)

Bearing number	Pinion number	No. of teeth	Diametral pitch	Face (F)	Hub length (L)	Pitch dia.	Outer dia.	Hub dia.	Stock bore	Square Keyway
MT145 thru MTE324	39201001	17	5/7	2.250	3.125	3.400	3.686	2.906	1.000	.250
MTE415 thru	39200001	14	4	2.000	.88	3.500	3.900	2.880	1.000	
MTE540	39200002	17	4	2.000	.88	4.250	4.650	3.630	1.000	
MTE590 thru	39200003	14	3	2.000	.88	4.667	5.200	3.880	1.250	
MTE705	39200004	17	3	2.000	.88	5.667	6.200	4.880	1.250	
Tolerances			Ref.	Ref.	Ref.	Ref.	+.000 -.010	Ref.	+.002 -.000	

Figure 10

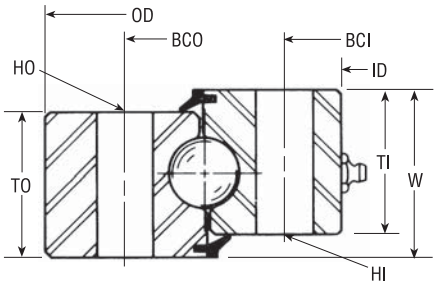

Mounting holes					Approx. wt. (lbs.)	Reference moment load rating ft. lbs.
BCO	BCI	No. holes Inner	No. holes Outer	Hole dia. HI/HO		
10.630	6.890	16	16	.562	37	26,000
10.630	6.890	16	16	.594	41	30,600
13.190	9.449	20	16	.562	38	44,500
13.190	9.449	20	16	.594	48	52,100
15.354	11.614	24	18	.562	54	62,000
15.354	11.614	24	18	.594	61	71,900
18.875	14.375	20	20	.625 UNC	105	102,400

Hole data						Gear data—20° pressure angle						Approx. wt. lbs.	Reference moment loading rating (lbs.)ft.-lbs.
BCO	No. holes outer	HO	BCI	No. holes inner	HI	PD	DP	FW	No. teeth	BHN core hardness	Max. tangential tooth load		
10.630	16	.562	6.890	16	.562	12.000	5/7*	1.732	60	277-321	7,140	38	26,000
10.630	16	.594	6.890	16	.594	12.000	5/7*	1.732	60	277-321	7,140	38	30,600
13.190	16	.562	9.449	20	.562	14.400	5/7*	1.496	72	262-302	5,810	38	44,500
13.190	16	.594	9.449	20	.594	14.400	5/7*	1.732	72	277-321	7,290	44	52,100
15.354	18	.562	11.614	24	.562	16.800	5/7*	1.732	84	277-321	7,330	57	62,000
15.354	18	.594	11.614	24	.594	16.800	5/7*	1.732	84	277-321	7,330	57	71,900
18.875	20	.625UNC	14.375	20	.625UNC	20.2	5/7*	2.022	101	277-321	8,700	98	101,700
18.875	20	.688	14.375	20	.688	20.200	5/7*	2.063	101	277-321	8,863	99	102,100
22.250	16	.813	17.750	20	.813	24.250	4**	2.063	97	277-321	10,420	132	159,200
24.500	18	.813	20.000	24	.813	26.500	4**	2.063	106	277-321	10,460	147	191,600
27.250	24	.813	22.750	28	.813	29.250	4**	2.063	117	277-321	10,520	163	232,000
30.625	18	.938	24.875	24	.938	33.000	3**	2.563	99	277-321	17,290	283	338,700
35.250	24	.938	29.500	28	.938	37.667	3**	2.563	113	277-321	17,390	332	443,200
38.000	20	1.063	31.000	24	1.063	41.200	2.5**	2.630	103	277-321	21,290	498	588,000
43.875	24	1.188	36.250	28	1.188	46.800	2.5**	3.875	117	277-321	31,620	780	873,800

•Consult Kaydon for instruction on relubrication of this bearing.
*Warning–Damage to equipment and danger to human life can result from failure to heed the recommendations in the text identified by the warning symbol.

See load rating charts on page 23.

Figure 11

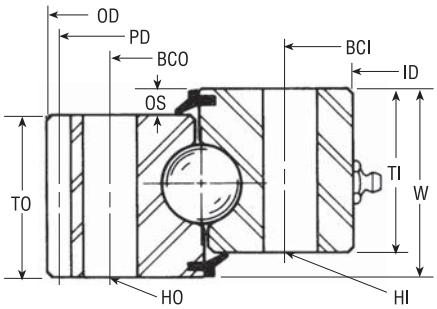

Figure 15

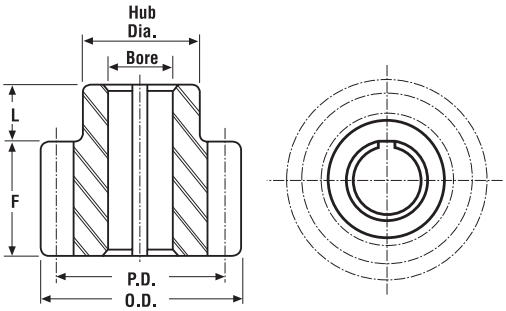

RK Series (inch series) Bearing Selection Data
Standard Tolerances

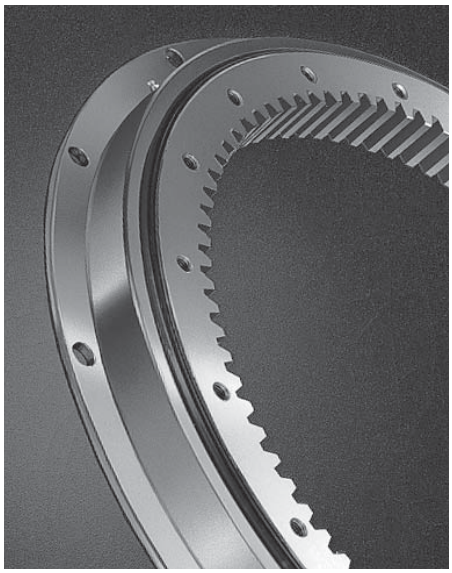

Pre-engineered turntable bearings *from* stock

Kaydon's RK-Series bearings provide a cost effective solution for applications such as small cranes, booms, and lifts; aerial towers and ladders; industrial positioners and rotary tables; rotating displays; robotics; material handling equipment and conveyors.

Standard bolt holes make mounting easy. Available in sizes up to 48" O.D. with internal gear, external gear, and non-geared configurations. For moment loads to 140,000 ft.-lbs. Matching pinions also from stock.

Table 3—Non geared RK Series (Figure 12)

Model No.	Kaydon P/N	Weight lbs.	Outline dimensions (inches)					
			OD	CO	LO	LI	CI	ID
RK6-16P1Z	39510001	58	20.390	17.870	16.220	16.140	14.490	11.970
RK6-22P1Z	39511001	76	25.510	22.990	21.340	21.260	19.610	17.090
RK6-25P1Z	39512001	89	29.450	26.930	25.280	25.200	23.550	21.030
RK6-29P1Z	39513001	104	33.390	30.870	29.220	29.140	27.490	24.970
RK6-33P1Z	39514001	118	37.320	34.800	33.150	33.070	31.420	28.900
RK6-37P1Z	39515001	132	41.260	38.740	37.090	37.010	35.360	32.840
RK6-43P1Z	39516001	153	47.170	44.650	43.000	42.920	41.270	38.750
Tolerances			±.040	+.000 -.080	Ref.	Ref.	+.080 -.000	±.040

Table 4—Internal geared RK Series (Figure 13)

Model No.	Kaydon P/N	Weight lbs.	Outline dimensions (inches)					Mounting	
			OD	CO	LO	LI	ID	BCO	No. holes BCO
RK6-16N1Z	39530001	65	20.390	17.870	16.220	16.140	12.850	19.250	8
RK6-22N1Z	39531001	90	25.510	22.990	21.340	21.260	17.600	24.380	10
RK6-25N1Z	39532001	106	29.450	26.930	25.280	25.200	21.600	28.380	12
RK6-29N1Z	39533001	121	33.390	30.870	29.220	29.140	25.600	32.250	15
RK6-33N1Z	39534001	148	37.320	34.800	33.150	33.070	29.133	36.250	18
RK6-37N1Z	39535001	165	41.260	38.740	37.090	37.010	33.133	40.130	18
RK6-43N1Z	39536001	188	47.170	44.650	43.000	42.920	39.133	46.000	18
Tolerances			±.040	+.000 -.080	Ref.	Ref.	+.030 -.000		

Table 5—External geared RK Series (Figure 14)

Model No.	Kaydon P/N	Weight lbs.	Outline dimensions (inches)					Mounting	
			OD	LO	LI	CI	ID	BCO	No. holes BCO
RK6-16E1Z	39550001	72	19.900	16.220	16.140	14.490	11.970	18.000	8
RK6-22E1Z	39551001	96	25.150	21.340	21.260	19.610	17.090	23.250	12
RK6-25E1Z	39552001	115	29.150	25.280	25.200	23.550	21.030	27.250	15
RK6-29E1Z	39553001	128	32.900	29.220	29.140	27.490	24.970	31.000	18
RK6-33E1Z	39554001	152	37.200	33.150	33.070	31.420	28.900	35.000	18
RK6-37E1Z	39555001	172	41.200	37.090	37.010	35.360	32.840	38.880	18
RK6-43E1Z	39556001	189	46.867	43.000	42.920	41.270	38.750	44.630	20
Tolerances			+.000 -.030	Ref.	Ref.	+.080 -.000	±.040		

Table 5A—Mating Pinions for RK-Series Bearings (Figure 15)

Bearing Model No.	Pinion No.	No. of teeth	Diametral pitch	Face (F)	Hub length (L)	Pitch dia.	Outer dia.	Hub dia.	Stock bore
RK6-16 thru	39200001	14	4	2.000	.88	3.500	3.900	2.880	1.000
RK6-29	39200002	17	4	2.000	.88	4.250	4.650	3.630	1.000
RK6-33 thru	39200003	14	3	2.000	.88	4.667	5.200	3.880	1.250
RK6-43	39200004	17	3	2.000	.88	5.667	6.200	4.880	1.250
Tolerances			Ref.	Ref.	Ref.	Ref.	+.000 -.000	Ref.	+.002 -.000

*Warning–Damage to equipment and danger to human life can result from failure to heed the recommendations in the text identified by the warning symbol.

Mounting holes			
BCO	No. holes BCO	BCI	No. holes BCI
19.250	8	13.130	12
24.380	12	18.130	15
28.380	12	22.130	18
32.250	15	26.130	18
36.250	18	30.000	18
40.130	18	34.000	20
46.000	18	39.880	24

Figure 12

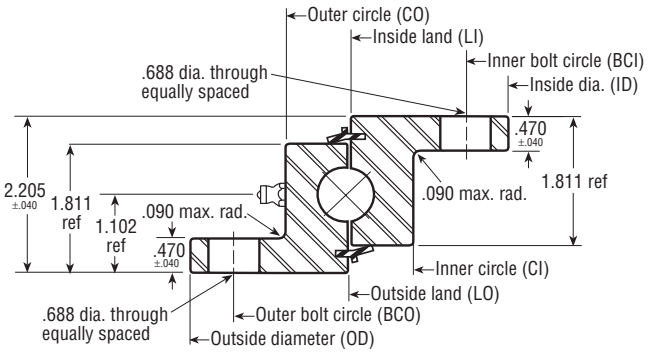

holes		Gear data—20° stub involute				
BCI	No. holes BCI	PD	Diametral pitch	No. teeth	Max. tangential tooth load (lbs.)	Circle tooth thickness
14.880	12	13.250	4	53	6810	.3877/.3777
19.630	15	18.000	4	72	6460	.3877/.3777
23.630	18	22.000	4	88	6430	.3877/.3777
27.630	18	26.000	4	104	6320	.3877/.3777
31.500	18	29.667	3	89	8520	.5186/.5086
35.500	20	33.667	3	101	8440	.5186/.5086
41.500	24	39.667	3	119	8340	.5186/.5086

Matching pinions available from stock. See Table 5A.

Figure 13

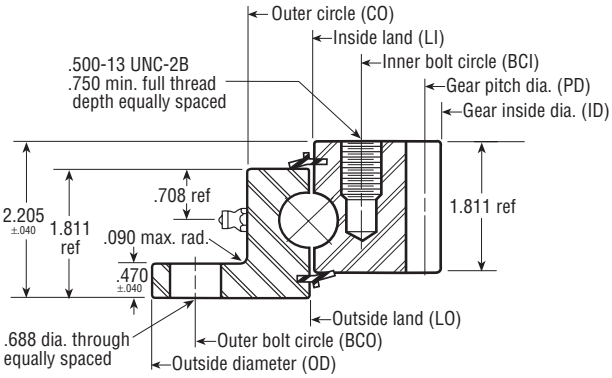

holes		Gear data—20° stub involute				
BCI	No. holes BCI	PD	Diametral pitch	No. teeth	Max. tangential tooth load (lbs.)	Circle tooth thickness
13.130	12	19.500	4	78	5550	.3877/.3777
18.130	15	24.750	4	99	5650	.3877/.3777
22.130	18	28.750	4	115	5690	.3877/.3777
26.130	18	32.500	4	130	5760	.3877/.3777
30.000	18	36.667	3	110	7590	.5186/.5086
34.000	20	40.667	3	122	7640	.5186/.5086
39.880	24	46.333	3	139	7680	.5186/.5086

Matching pinions available from stock. See Table 5A.

Figure 14

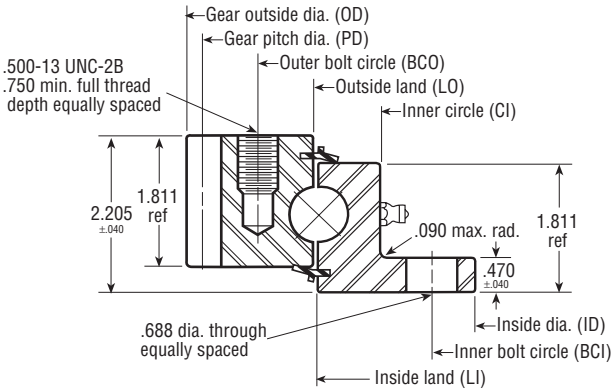

Figure 15

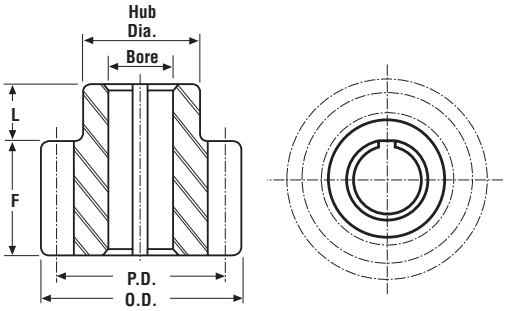

See load rating charts on page 23.

Custom Four-Point Contact Bearing Selection Data

The unique "Gothic Arch" raceway design of four-point contact ball bearings provides an exceptional means of handling combined axial, radial and moment loading. The applications for these bearings are unlimited, ranging from heavy-duty cranes to machine tool turntables to advanced medical imaging equipment. Kaydon bearings have been manufactured with up to 10 million pounds-feet of moment load capacity.

Listed below is a sampling of the many custom-designed four-point contact ball bearings produced by Kaydon. One of these bearings may offer a pre-engineered design solution to your specific application requirements.

Many other custom designs are available. Through preloading and close tolerance machining, extreme high precision levels can be maintained for these large-diameter bearings. Kaydon engineers will be happy to review your application and make specific design recommendations.

Table 6—Non geared four-point (Figure 16)

Model No.	Kaydon P/N	Outline dimensions (inches)							Hole		
		OD	ID	W	TO	TI	DI	DO	BCO	No. holes outer	HO
T4-13P1	12062	15.790	9.170	1.580	1.228	1.228	13.64	11.79	14.880	8	.562

Table 7—Internal geared four-point (Figure 17)

Model No.	Kaydon P/N	Outline dimensions (inches)						Hole data			
		OD	ID	W	TO	TI	CI	BCO	No. holes outer	HO	BCI
T10-46N4	12496	51.120	39.760	3.560	3.120	2.690	41.620	49.125	24	1.063	43.000
T14-49N1	12131	54.375	41.280	5.000	3.875	4.625	43.000	52.500	22	.938	45.250
T20-95N1	09722	102.500	85.360	7.440	6.780	5.660	88.380	99.803	16	1.313	91.142

Table 8—External geared four-point (Figure 18)

Model No.	Kaydon P/N	Outline dimensions (inches)						Hole data			
		OD	ID	W	TO	TI	CO	BCO	No. holes outer	HO	BCI
T8-39E4	12246	42.640	35.157	3.234	2.905	2.875	41.024	39.960	30	5/8-11	36.300
T10-20E2	12134	25.650	16.250	3.500	3.250	2.875	—	23.250	18	.781	17.625
T10-24E1	12343	30.171	18.875	3.500	3.188	2.625	—	27.625	36	.781	20.750
T14-18E2	11457	23.650	12.880	3.440	3.190	3.190	—	21.250	18	3/4-16	14.375
T14-22E4	12037	28.400	17.130	3.440	3.190	3.190	—	25.380	18	.781	18.630
T14-24E6	12070	29.887	19.125	3.625	3.250	3.250	—	27.375	30	3/4-10	20.625
T18-44E1	11736	52.800	36.950	4.750	4.375	4.375	50.655	48.250	30	1.313	39.375
T24-65E1	11729	74.800	55.875	6.375	6.000	6.000	72.625	70.250	45	1.313	58.500
T24-65E4	11311	75.800	53.875	6.500	6.000	6.000	66.990	70.250	52	1-1/2-6	58.500
T24-89E2	11930	98.800	78.400	6.625	6.000	6.000	98.000	94.250	72	1-1/2-6	82.500
T24-75E3	12198	85.067	66.750	7.120	6.500	6.620	82.120	80.125	30	1.313	69.250
T24-89E1	11277	98.800	78.400	6.625	6.000	6.000	98.000	94.250	72	1-1/2-6	82.500

*UNF
**UNC
***Fellow stub

★Warning–Damage to equipment and danger to human life can result from failure to heed the recommendations in the text identified by the warning symbol.

data			Approx. wt.	Reference moment load rating ft.-lbs.
BCI	No. holes inner	HI		
10.250	8	.562	20	4,300

Figure 16

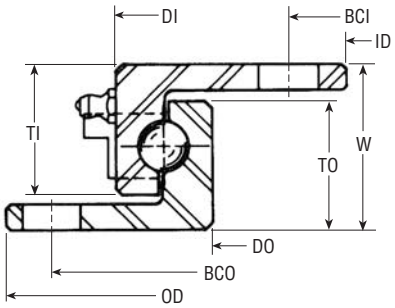

		Gear data—20° U.S.A. std. stub						Approx. wt.	Reference moment ft.-lbs. rating
No. holes inner	HI	PD	DP	FW	No. teeth	BHN core hardness	Tangential toothload lbs. max.		
20	1-8*	40.400	2.5	2.590	101	241-285	19,890	602	515,180
36	.938	41.600	2.5	3.000	104	262-302	25,030	1,090	837,000
48	1.313	86.633	1.5	5.500	136	277-321	77,640	3,755	3,450,000

Figure 17

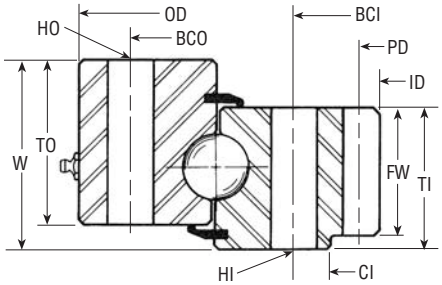

		Gear data—20° U.S.A. std. stub						Approx. wt.	Reference moment ft.-lbs. rating
No. holes inner	HI	PD	DP	FW	No. teeth	BHN core hardness	Tangential tooth load lbs. max.		
30	.687	42.000	2.5	2.593	105	262-302	19,455	301	270,000
20	.781	25.250	4	3.250	101	262-302	15,210	236	162,000
22	.781	29.714	3.5	3.188	104	262-302	17,085	301	238,730
23	3/4-16*	23.250	4/5***	3.190	93	250-300	14,545	260	214,670
23	.906	28.000	4	3.190	112	250-300	15,015	319	255,000
29	.938	29.429	3.5	3.250	103	262-302	17,420	330	365,360
30	1-1/4-7**	52.000	2	3.250	104	250-300	30,480	1,070	1,338,000
47	1-1/4-7**	74.000	2	4.000	148	277-321	41,440	2,700	3,282,000
51	1.566	75.000	2	3.750	150	277-321	38,850	3,075	3,526,000
60	1.813	98.000	2	4.750	196	277-321	45,960	3,995	4,959,000
32	1.313	84.000	1.5	6.000	126	277-321	81,920	3,409	2,773,000
60	1.562	98.000	2	4.750	196	277-321	50,730	4,025	4,975,000

Figure 18

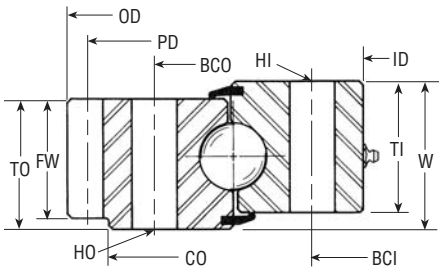

See load rating charts on page 24.

Eight-Point Contact Bearing Selection Guide

Kaydon developed the eight-point contact ball bearing to provide increased load capacity within prescribed diametral space limitations. These bearings function as two four-point contact bearings mounted together and provide moment load capacities up to 15 million pounds-feet.

In addition to the bearings shown below, we can customize a design to fill your specific requirements.

Table 9—Internal geared eight-point (Figure 19)

Model No.	Kaydon P/N	Outline dimensions (inches)					Hole data			
		OD	ID	W	TO	TI	BCO	No. holes outer	HO	BCI
D14-98N1	12282	108.000	87.170	7.563	7.188	6.250	102.953	66	1.593	93.504
D20-111N1	11563	121.000	98.400	8.750	8.438	8.438	117.000	53	1.575	105.000

Table 10—External geared eight-point (Figure 20)

Model No.	Kaydon P/N	Outline dimensions (inches)					Hole data			
		OD	ID	W	TO	TI	BCO	No. holes outer	HO	BCI
D18-89E1	11943	98.800	78.400	8.875	8.250	8.250	94.250	72	1-3/4-8	82.500

*Special tooth form

WireX® Bearing Selection Guide

Kaydon WireX® bearings were originally applied in military turret applications, where space and weight are at a premium and corrosion resistance is essential. These bearings are typically produced using stainless steel rolling elements and aluminum raceways.

WireX® bearings may also be used in turntable, radar and machine tool ap-pli-cations. They may have up to 3 rows of rollers and can provide moment load capacities up to 2.5 million pound-feet.

Table 11—Internal geared WireX® (Figures 21 and 22)

Kaydon P/N	Figure	Outline dimensions (inches)						Hole		
		OD	ID	W	TO	TI	CI	BCO	No. holes outer	HO
12321	21	41.000	34.079	1.629	1.306	1.569	36.705	40.000	30	.420
11960	20	44.752	34.960	2.559	2.440	2.000	35.906	42.625	48	.687
11666	20	65.430	58.336	2.880	2.303	2.750	58.900	64.375	50	.530
11830	20	67.360	59.775	2.953	2.640	2.441	60.620	66.000	48	.575

*Full depth
**Special form
***Fellows stub

Table 12—External geared WireX® (Figure 23)

Kaydon P/N	Figure	Outline dimensions (inches)				Hole		
		OD	ID	TO	TI	BCO	No. holes outer	HO
13436	22	88.464	74.568	3.150	3.854	84.724	36	M24

*Module #7 involute tooth form

★Warning–Damage to equipment and danger to human life can result from failure to heed the recommendations in the text identified by the warning symbol.

		Gear data—20° pressure angle						Approx. wt. lbs.	Reference moment load ft.-lbs.
No. holes inner	HI	PD	DP	FW	No. teeth	BHN core hardness	Tangential tooth load lbs. max.		
66	1.593	87.874	1.411*	4.130	124	277-321	73,760	5,170	6,900,000
72	1.575	100.000	1.25*	6.000	125	277-321	107,130	7,610	14,000,000

Figure 19

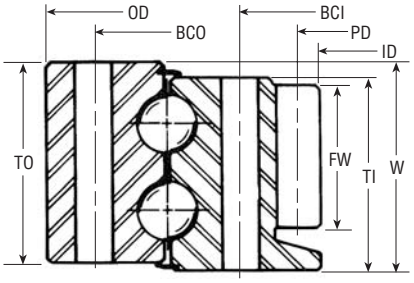

		Gear data—20° pressure angle						Approx. wt. lbs.	Reference moment load ft.-lbs.
No. holes inner	HI	PD	DP	FW	No. teeth	BHN core hardness	Tangential tooth load lbs. max.		
60	1.812	98.000	2	4.750	196	277-321	49,680	5,580	7,900,000

Figure 20

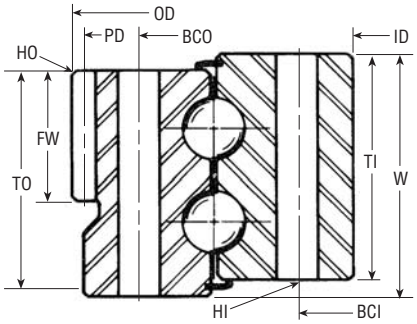

data			Gear data—20° pressure angle					Approx. wt. lbs.
BCI	No. holes inner	HI	PD	DP	FW	No. teeth	Ring material	
35.750	12	3/4-16	34.200	10/12***	.750	342	Steel	105
37.375	64	.687	35.200	5*	2.000	176	Alum.	150
61.250	48	1/2-20	58.500	10**	1.500	585	Alum.	310
61.750	48	1/2-13	60.000	8**	1.939	480	Alum.	182

Figure 21

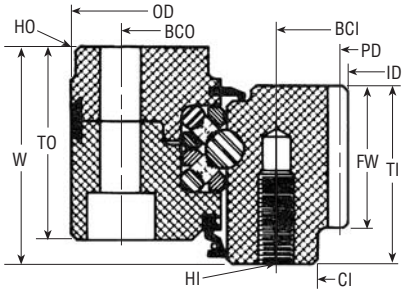

Figure 22

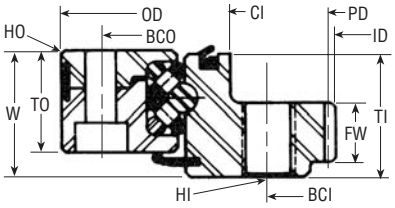

data			Gear data—20° pressure angle					Approx. wt. lbs.
BCI	No. holes inner	HI	PD	DP	FW	No. teeth	Ring material	
77.205	29	1.024	88.189	3.629*	3.150	320	Alum.	615

Figure 23

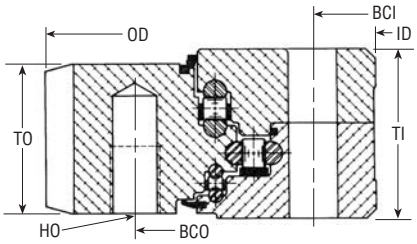

See load rating charts on page 24.

KH Series Pre-engineered high precision bearing assemblies

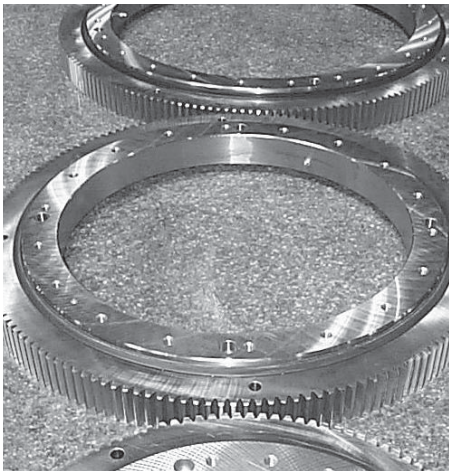

KH Series bearings are designed to provide precise positioning and stopping, with consistent repeatability, in applications where rotation is constant, intermittent or oscillating. They are the ideal bearing for advanced rotary index tables or any design where the bearing will interface with other precision mechanical components.

The KH Series bearing's unique 4-point contact ball geometry enables one bearing to handle simultaneous radial, axial and moment loading. An internal diametral preload provides greater stiffness and minimum free play. And unlike conventional air bearings, Kaydon KH Series will not lock up in the presence of off-center loads.

Available in 3 popular pitch diameters, in geared and non-geared versions, Series KH bearings feature a low profile to permit larger work areas above the index table.

Figure 24

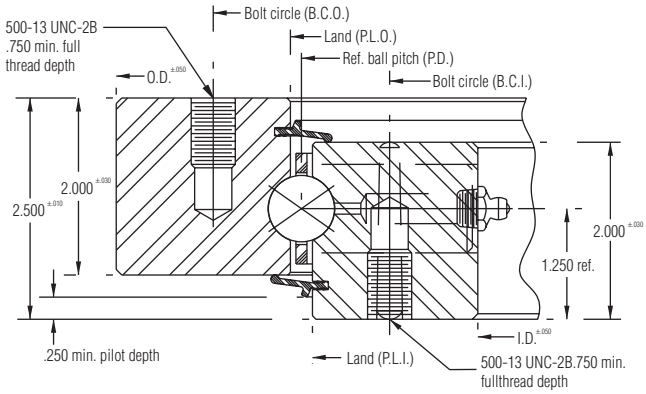

Figure 25

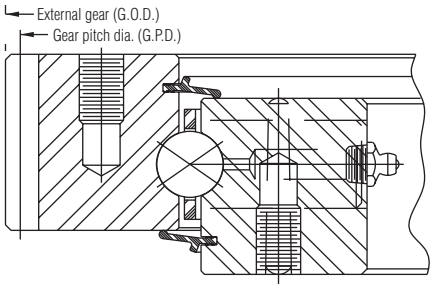

Table 14—Non geared KH Series (Figure 24)

Model No.	Kaydon P/N	Outline dimensional data (inches)			Land diameters		Hole data				No. lube holes	Approx. assembly lbs.
		PD	ID	OD	PLI	PLO	No. holes inner	No. holes outer	BCI	BCO		
KH166P	39560	16.6	12.750	20.500	16.375	16.875	20	20	14.375	18.875	1	106
KH225P	39561	22.5	18.500	26.700	22.250	22.750	18	18	20.500	24.500	1	150
KH275P	39562	27.5	23.500	31.700	27.250	27.750	24	24	25.500	29.500	1	185

Table 15—Geared KH Series (Figure 25)

Full depth involute gear 6 D.P., 20° pressure angle AGMA quality 8							
Model No.	Kaydon P/N	G.O.D.	G.P.D.	No. of teeth	Circular tooth thickness	Allowance for backlash	Approx. assembly lbs.
KH166E	39570	20.500	20.167	121	.2618/.2568	.000-.005	100
KH225E	39571	26.667	26.333	158	.2618/.2568	.000-.005	142
KH275E	39572	31.667	31.333	188	.2618/.2568	.000-.005	175

Table 15A—Designed for both dynamic and intermittent loads

Size	Dynamic		Intermittent	
	Axial (lbs.)	Moment (lbs-ft.)	Axial (lbs.)	Moment (lbs-ft.)
KH166	36,000	20,500	82,850	45,250
KH225	40,000	30,500	115,200	56,000
KH275	43,000	39,600	142,000	75,050

Note:
Dynamic-L_{10} capabilities based on million revolutions. Values do not apply simultaneously.
Intermittent-Individual capacity limits for maximum loading when normal mode of operation is an intermittent load application and rotation.

Tight deflection and tilt tolerances give KH Series bearings their precision

KH Series bearings are often used in applications where the position of a rotating part relative to the stationary structure is critical. The axis of rotation can be displaced from its true position in three ways-radially, axially, and angularly. These deviations are referred to as radial deflection, axial deflection, and tilt (angular rotation).

The following three tables show stiffness of standard KH Series bearings. If your application requires increased stiffness, Kaydon can often supply a stiffer bearing in the same envelope dimensions. Call us at (800) 514-3066.

Materials of construction and technical data

Rolling elements–
Chrome steel hardened to Rockwell C 60 minimum.

Ball paths (raceways)–
Selectively hardened for maximum obtainable bearing capacity. Four-point internal design permits acceptance of combination axial, radial, and moment loads.

Geared and ungeared rings–
Rolled high carbon steel forgings quenched and tempered to 262 BHN minimum

Gears–
Involute Stub, 20° pressure angle, AGMA quality 8

Seals–
Nitrile rubber seals provide positive contact for retention of lubrication and exclusion of contaminants

Lubrication–Multi-purpose lithium-based, NLGI No. 1 E.P. grease

Figure 25A—Radial Deflection

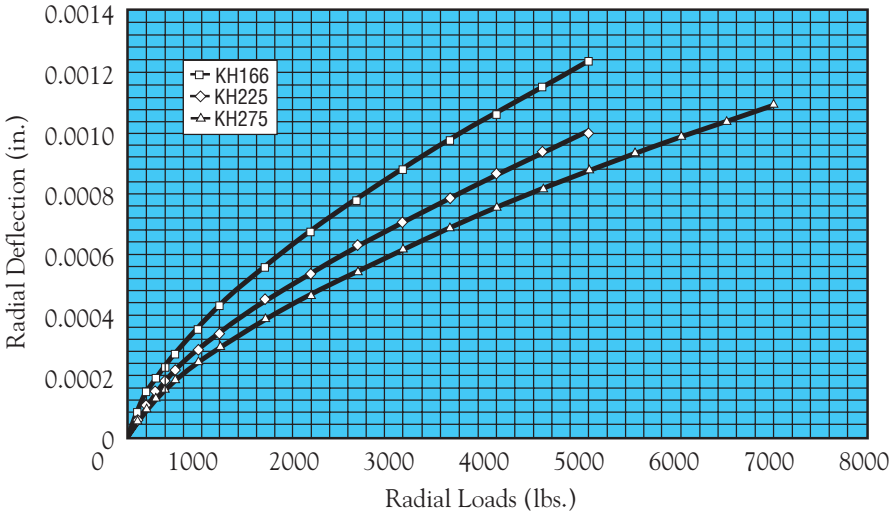

Figure 25B—Axial Deflection

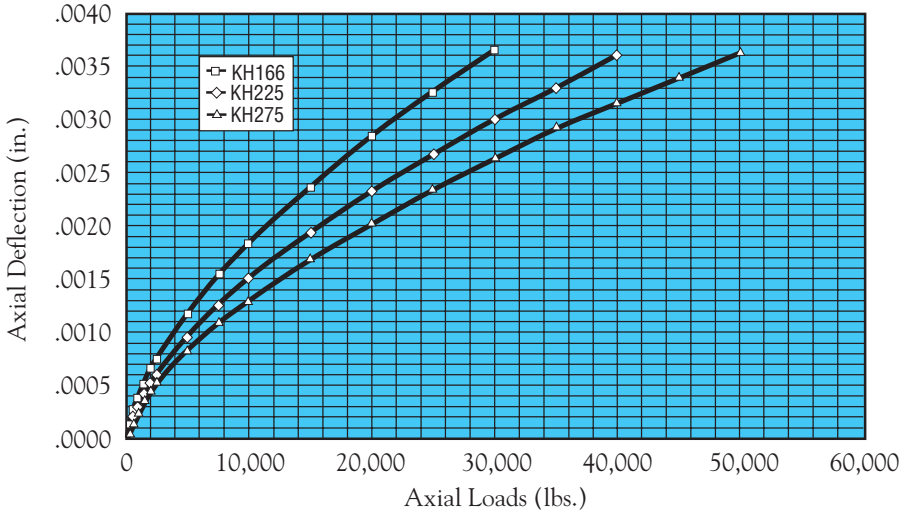

Figure 25C—Tilt of Axis

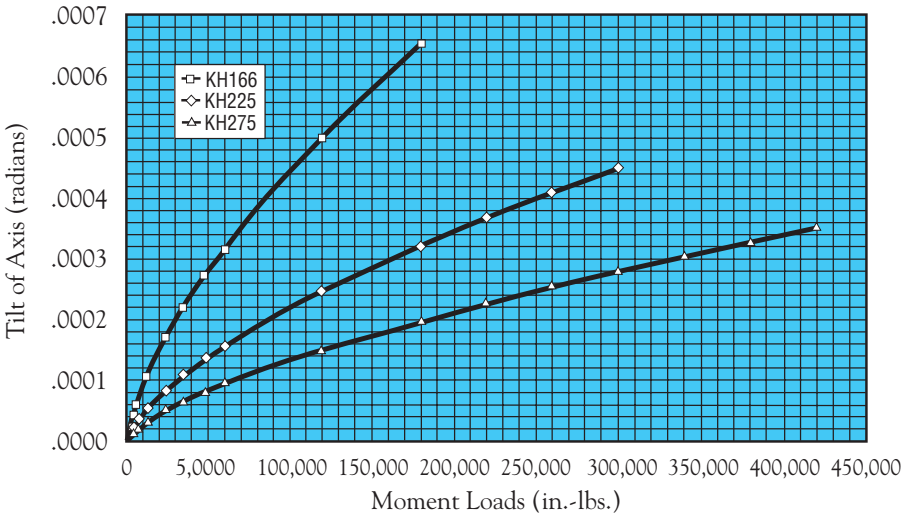

Special Bearing Capabilities

In addition to the more standard bearings shown on the preceding pages, Kaydon has extensive experience in the design and manufacture of customized or special bearings and assemblies. The ball and roller bearings shown below are only a sampling of our custom capabilities.

Biangular roller bearings generally provide higher stiffness and lower turning torques than four-point contact ball bearings with equivalent load capacities or dimensional envelopes.

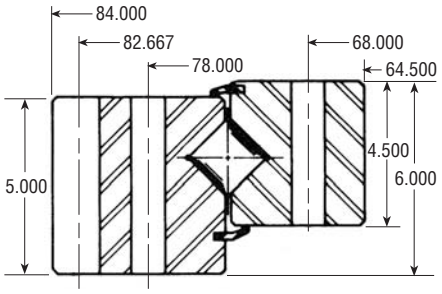

Figure 27

The **standard biangular bearing** has been applied in a variety of wind energy, radar and military turret applications.

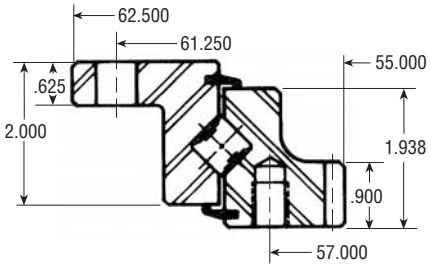

Figure 28

The **lightweight biangular bearing** is made from steel and was originally designed for use as a turret bearing on a steel-hulled military vehicle.

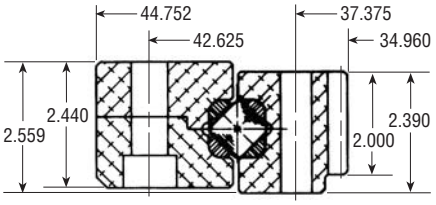

Figure 29

The WireX® single-row biangular bearing shown provides a larger rolling element—and resultant higher load capacity—than a two-row WireX® bearing with the same cross-selectional area. As with the bearings shown on Pages 18-19, the aluminum races and stainless rollers and wires provide light weight and corrosion resistance.

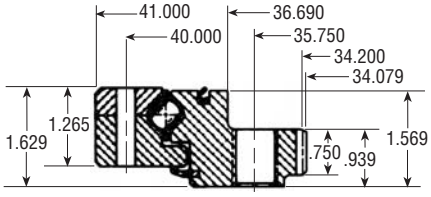

Figure 30

This **aluminum race bearing** with nonmetallic balls was originally developed to provide light weight and corrosion resistance in a lightly loaded military turret. Similar bearings are used in medical equipment applications where the environment does not allow for grease lubrication. A wide variety of ball materials can be used.

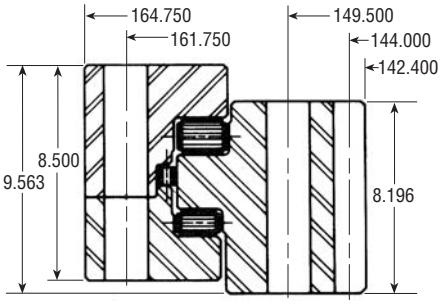

Figure 31

This **three-row roller bearing** is used on a large crane slewing ring and provides a high degree of stiffness, generally interchangeable with an eight-point contact ball bearing.

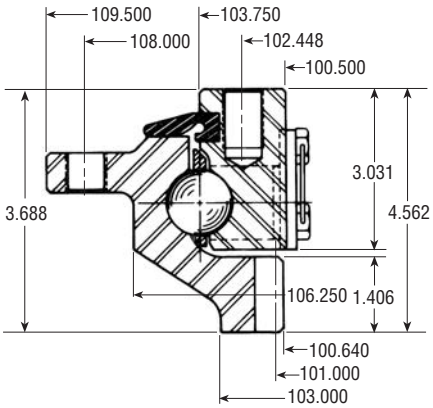

Figure 32

This military turret bearing is a **thin-section large diameter bearing with custom options** such as flanges and internal gears cut on the outer race. By adding these options to the bearing, a number of individual parts can be eliminated, simplifying assembly and resulting in lower total system cost.

Load Rating Charts

Figure 33

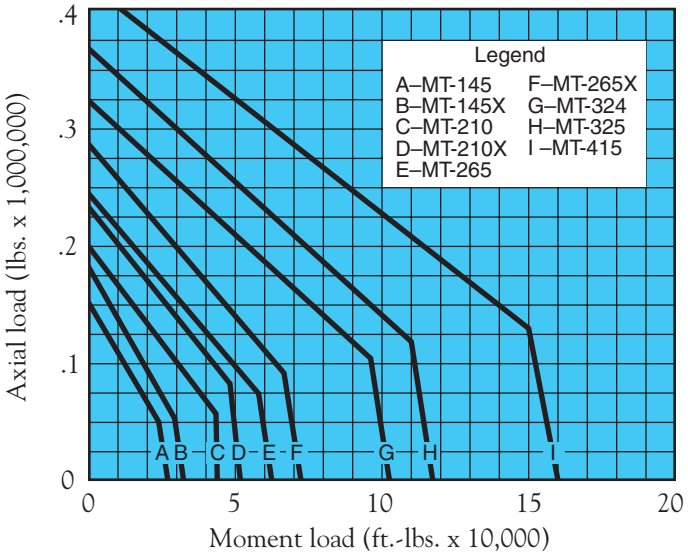

Figure 34

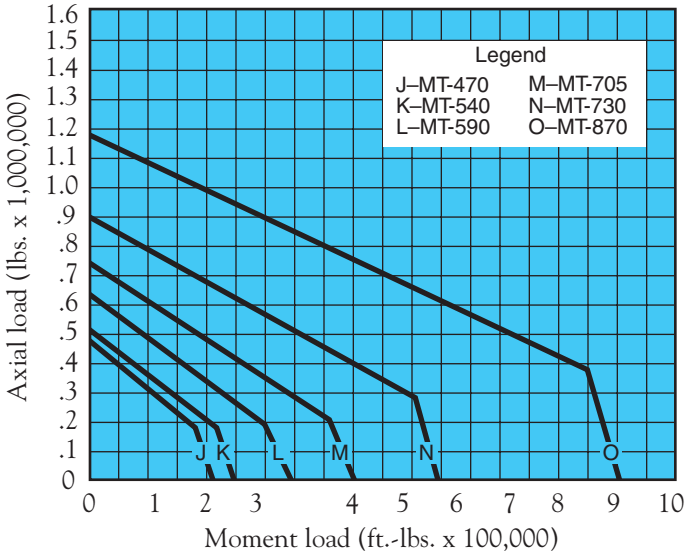

MT-Series ratings apply to either MTE or MTO Series

Figure 35

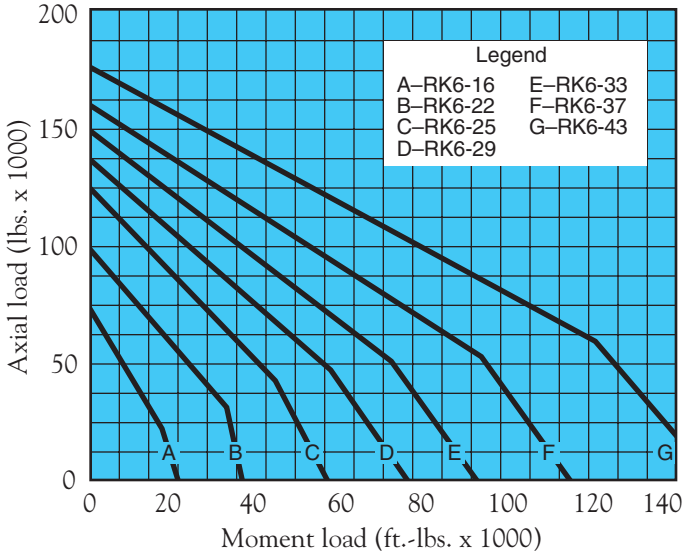

RK-Series

Figure 36

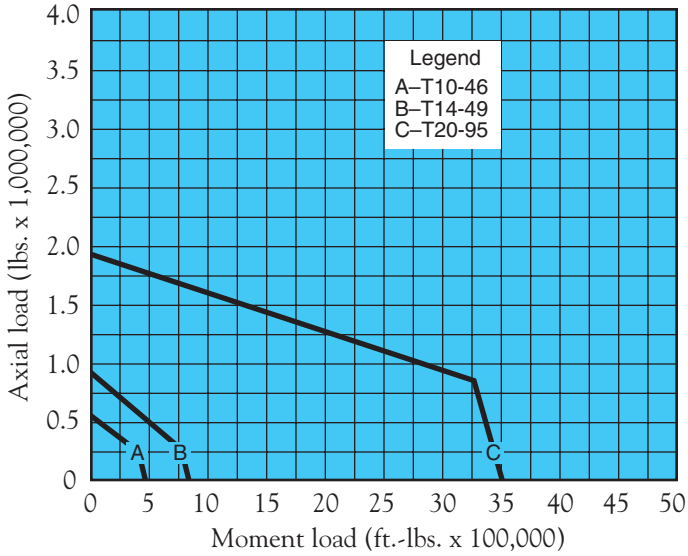

Internal gear
4-point contact

Figure 37

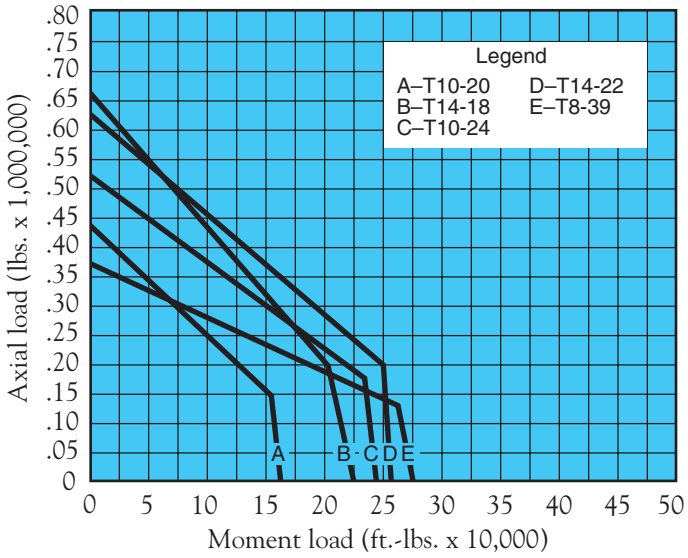

External gear
4-point contact
See pages 16-17.

Figure 38

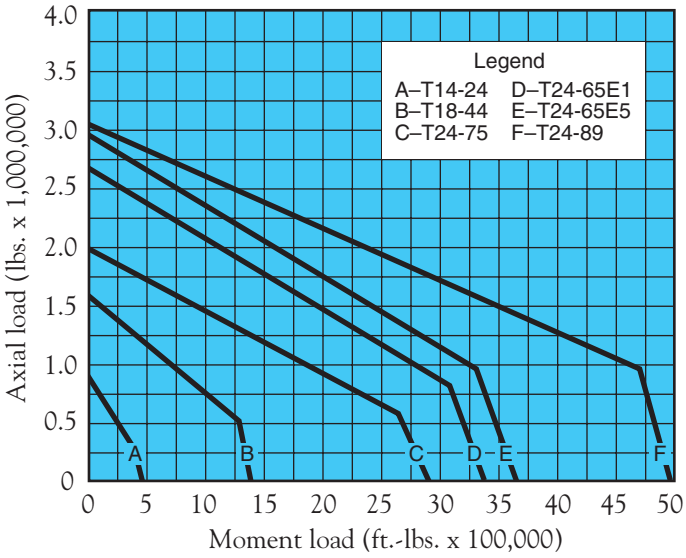

External gear
4-point contact
See pages 16-17.

Section 4–Load Rating Charts

Figure 39

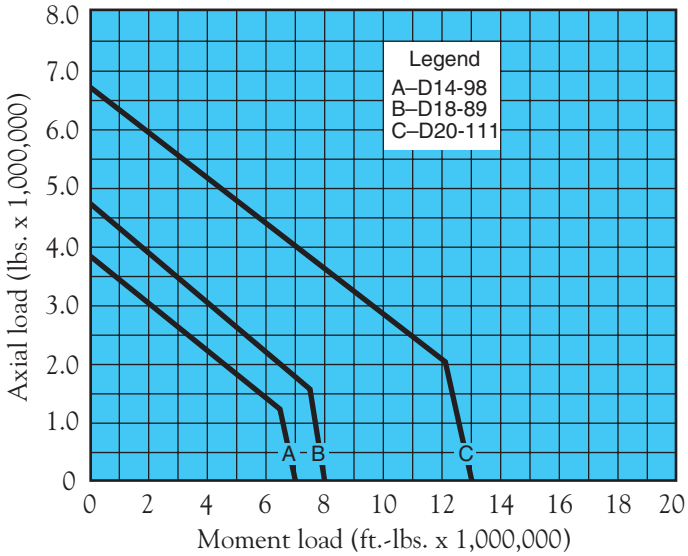

8-point contact
See pages 18-19.

Installation and Care of Kaydon Turntable Bearings

Part I—Design Considerations (For Guidance of the Equipment Designer)

Mounting structure

Most designs are necessarily a compromise from the ideal to the practical. The design of mountings for large multiload bearings is no exception. Several conditions, however, must be satisfied by the mounting structures above and below the bearing, in order to give good bearing life and performance. These conditions are stiffness, flatness, hole location accuracy, protection, access for maintenance, and attachment method.

Stiffness

The ideal bearing mounting would be absolutely rigid, but mobile equipment is by its very nature flexible and thus elastic deflections will occur. However, distortions can be held to tolerable levels if the shape of the main structural members above and below the bearing are generally in the form of a cylinder whose outer diameter is equal to or slightly larger than the bearing ring to which they are attached. An example is the flanged drums commonly used on crawler trucks.

Figure 40 has been prepared to show the maximum allowable deflections ball bearings can withstand and still function properly. Deflection must be gradual. Avoid short, stiff sections in the mounting as these can adversely affect the loading pattern of the rolling elements by causing extremely high loads between a few elements and the raceways. They also have a similarly adverse effect on bolt loads. In addition, excessive turning torque may result, causing high gear tooth loads.

Figure 40—Allowable mounting deflection (circumferential)

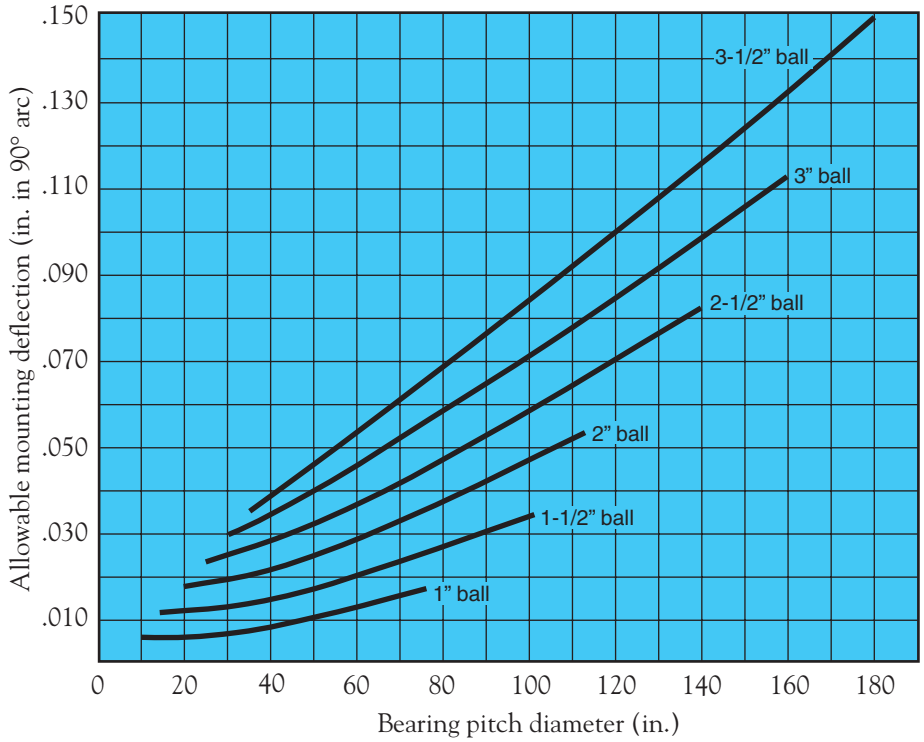

Figure 41—Allowable mounting out-of-flatness (circumferential)

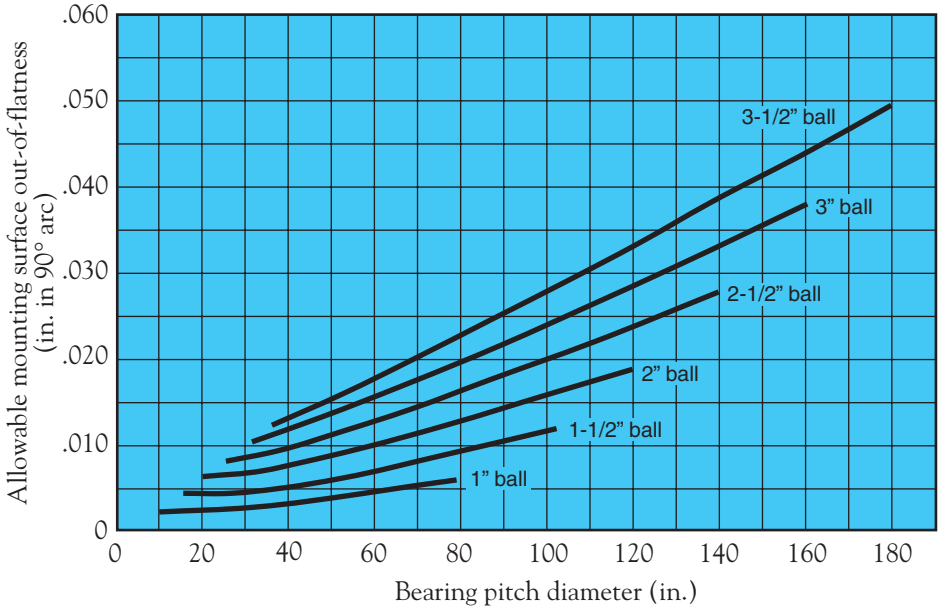

NOTE: These charts refer to ball bearings. For roller bearings, consult Kaydon for allowable stiffness and flatness.

Flatness

Bearing mounting surfaces must be machined flat after all welding and stress relief treatment on the structures is complete. If subsequent welding is necessary, it must be done in such a manner that no distortion is experienced by the machined mounting surface. The allowable degree of out-of-flatness is shown in Figure 41. Out-of-flatness like distortion, must be gradual.

Questions are often asked about shimming or grouting of mounting surfaces to compensate for excessive out-of-flatness. While shimming is acceptable if done properly, most equipment builders find it so difficult to control in production that it is more troublesome and costly than machining. Plastic grout has such a low modulus of elasticity that under cyclic loading mounting bolt fatigue failure can result. Thus, KAYDON STRONGLY RECOMMENDS AGAINST THE USE OF GROUTING WHEREVER CYCLIC THRUST AND MOMENT LOADS ARE EXPECTED.

Another consideration is the allowable deviation from a true plane in a radial direction ("dish"), which is more difficult to control in machining mounting surfaces. Table 16 shows allowable values for out-of-flatness as machined and for deflection under load.

Table 16

Allowable out-of-flatness and deflection—radial ("dish")		
Ball dia. inches	Out-of-flatness inches per radial inch of mounting surface	Deflection inches per radial inch of mounting surface
1	.0010	.0030
1-1/2	.0015	.0045
2	.0020	.0060
2-1/2	.0025	.0075
3	.0030	.0090
3-1/2	.0035	.0105

Hole location accuracy, pilots

Mounting holes and dowel holes, if any, must be within the true location tolerances required to prevent distortion of the bearing due to interference. See the applicable drawing for the bearing tolerances. Use of bearings as templates for transfer of hole location is permissible if care is taken not to distort thin section bearings. But bearings should never be used as drill jigs.

Pilots, if used, must be round and accurately sized so that they do not distort the bearing. Mounting hole location tolerance must include any eccentricity of the hole pattern with pilot diameters.

Protection

In general, Kaydon bearings are designed to withstand all normal operating environments. However, if the upper structure does not provide complete cover for the upper bearing, a seal or shield should be added. Also, an external gear that would be exposed to very dirty conditions should be shrouded.

Shields and shrouds should be designed with cover doors, plugs, or other means of access to the bearing for the purposes discussed below.

Access for maintenance

Like all mechanical components on a machine, the bearing must be accessible so that it can be properly maintained. The following must be considered.

*Mounting bolts require periodic checking and retightening. Access to every mounting bolt must be readily available, or this maintenance item will be neglected and may result in mounting bolt failure.

Lubrication of Gear and Raceway is required and therefore convenient access to the gear and bearing grease fittings must be provided. Convenience is stressed because of the human element involved. It is best to add remote lines to the bearing so that it may be rotated as grease is introduced to the raceways.

The Taper Pin Retainer for the ball loading hole plug must be removed on rare occasions *by qualified personnel* to inspect raceways or to replace rolling elements or spacers. A hole, approximately 11/4 inches in diameter must be located in both upper and lower mounting structures directly above and below the "Taper Pin Retainer," so that it may be removed. (See Figure 42.)

Figure 42—Access holes for loading hole plug

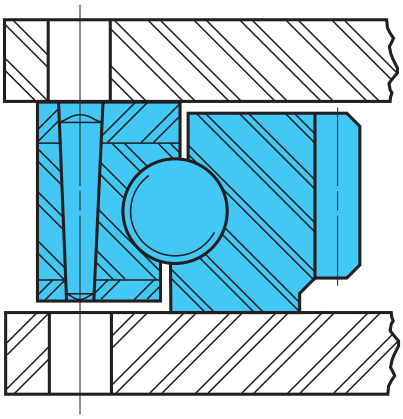

*Attachment

The method of attachment of Kaydon bearings to the support structure significantly affects their design. The type, size, and quantity of fasteners must be determined if bolts will be used. If welding is to be done, a decision must be made as to which race will be so attached and whether a "band" will be welded to the inner or outer diameter or a "ring" will be welded to one of the faces.

*Bolts

The preferred bolting arrangement is a full circle of equally spaced fasteners in through holes in both bearing races. This benefits both the bearing and the bolts. The bearing races are reinforced by the bolt pretension. The greater bolt length makes for more accurate and uniform pretension.

*For three important reasons responsibility for the quantity, size, and thread engagement of fasteners must be accepted by the equipment designer.

a. There is no universally accepted method of analyzing the forces imposed on the fasteners in a joint subjected to moment loading.

b. The stiffness and uniformity of the structures to which the bearing is attached have an extremely high degree of influence on the load in the fasteners. Only the equipment designer can control this.

c. The quality of the fasteners, the method of pretensioning, the hardness of the surfaces under the heads and the thread lubricant are other important factors over which the equipment manufacturer has control.

*This should be done with the advice and assistance of the supplier of the bolts because the quality of bolts varies widely as do the recommendations for methods of pretensioning and maintenance of pretension. Attention to such details as a head/body fillet radius, thread form, as well as the more obvious freedom from cracks and other possibly fatal flaws are very important to the safety of the equipment. The importance of adequate and uniform pretensioning is evident from the proliferation of and advances in devices offered for this purpose—ranging from turn of the nut indicator to preload indicating washers to torque wrenches with integral "yield" sensors to computerized torque wrenches to hydraulic bolt stretchers.

*At the least, Kaydon recommends the use of high strength bolts with coarse threads and hexagon heads, and heavy series nuts of equivalent strength. Also, recommended is the use of thread lubricant and hardened steel flat, Belleville, or calibrated preload indicating washers. Use of lockwashers is *NOT* recommended when bolts are tensioned by torquing, because of the danger of undertensioning due to high friction torque.

For the protection of the equipment builder, specifications should require that the bolts carry not only the standard SAE grade code but also a positive means of identifying the manufacturer.

Bolt Loading

To aid the designer, a method is presented here to calculate the *approximate* load on the heaviest loaded bolt. This method is based upon past experience and yields results that have proved satisfactory for most applications. It is analogous to the method Kaydon uses to determine the load in the heaviest loaded rolling element within a bearing.

However, for the reasons stated Kaydon makes no warranty, expressed or implied, regarding the adequacy of the bolts. The only certain way to determine the actual load is by *testing*, which is *strongly recommended*.

Bolt Load

$$Rb = \frac{M \times F_f}{D \times N} \pm \frac{F_t}{N}$$

Factor of Safety

$$^{*}F_s = \frac{\text{Bolt Proof Load Rating}}{Rb}$$

M = Moment load in pounds-inches
F_f = Flexibility factor. Use 3 for bearings and support structures of average stiffness
F_t = Axial load in lbs.
D = Bolt circle dia. in inches
N = total number of equally spaced bolts
Rb = Total load on heaviest loaded bolt in lbs.
$^{*}F_s$ = *Factor of safety of bolts. Recommended minimum value 3*

Bolt Proof Load
Coarse Thread Series
S.A.E. Grade #8 and ASTM A 490

Bolt Dia. Ins.	Proof Load Lbs.	Bolt Dia. Ins.	Proof Load Lbs.
1/2	17,000	1	72,700
5/8	27,100	1-1/8	91,600
3/4	40,100	1-1/4	116,300
7/8	55,400	1-1/2	168,600

*Welding

Of late, the attachment of bearings by welding has been limited on new applications to unusual situations. These are best handled by working directly with the Kaydon Engineering Department to establish both the optimum design and the best welding procedures.

Gears

Kaydon offers integral gears as either straight or helical spur, and either internal or external. Use of a 20° pressure angle is favored because of availability of standard cutters, but 14-1/2°, 25°, and special pressure angles can be furnished.

Selection

The machine designer will usually determine the tooth size and form, working within the constraints of his application and basing his selection on his own

*See warranty, page 33.

methods of calculation and past experience. However, the commonly accepted Lewis equation may be used to determine the size of the gear.

$$L = \frac{SFY}{P}$$

L = Tangential Tooth Load

S = Allowable Bending Stress

Y = Tooth Form Factor (Table 17)

P = Diametral Pitch

F = Face Width

Allowable bending stress (S)

Core Hardness		Allowable Bending Stress P.S.I.
241-285	BHN (23-30Rc)	34,000
262-302	BHN (27-32Rc)	37,000
277-321	BHN (29-34Rc)	40,000

The stresses given above are for maximum or "Stall Torque" conditions. When shock factors are included in the loading, higher stresses may be used.

The "Stub" tooth form is often used in large gears. Economics is the main reason this tooth form is selected. It requires less material in the ring forging and less gear cutting time. The "Full Depth" tooth form provides a greater contact ratio, and consequently smoother operation but lower bending strength.

Surface hardening

Induction hardened gear teeth, with minimum surface hardness of 55 Rc should be considered when high tooth surface pressures constantly occur. An excavator or logger which sees a high rate of acceleration and a rapid deceleration during a swing cycle would be typical of this condition.

A full root radius with root hardening is recommended when gear teeth are induction hardened. The tooth pattern and depth of hardness are critical.

Table 17

Tooth form factor (Y)						
No. of teeth	20° full depth involute system	20°stub tooth system	Fellows stub tooth system 4/5	5/7	6/8	Internal gears 20°full depth system
12	.245	.311	.301	.349	.320	
13	.261	.324	.317	.361	.336	
14	.276	.339	.330	.374	.352	
15	.289	.348	.339	.386	.361	
16	.295	.361	.349	.396	.374	
17	.302	.367	.358	.405	.383	
18	.308	.377	.367	.411	.389	
19	.314	.386	.374	.412	.399	
20	.320	.393	.380	.424	.405	
21	.327	.399	.386	.430	.411	
22	.330	.405	.393	.437	.412	
24	.336	.415	.402	.446	.427	
26	.346	.424	.408	.455	.437	
28	.352	.430	.418	.462	.443	.691
30	.358	.437	.424	.468	.449	.678
34	.371	.446	.437	.480	.461	.660
38	.383	.456	.440	.484	.468	.644
43	.396	.462	.452	.446	.480	.628
50	.408	.474	.462	.506	.490	.613
60	.421	.484	.471	.515	.499	.597
75	.434	.496	.484	.525	.509	.581
100	.446	.506	.496	.537	.521	.565
150	.459	.518	.509	.547	.534	.550
300	.471	.534	.525	.563	.550	.534
Use in Lewis Formula for P_____			4	5	6	

Therefore, a high degree of quality control must be exercised to assure that the proper pattern is maintained, and that cracks are non-existent. Some typical depths of hardness are as follows:

Table 18

Case depth-induction hardened gears		
Diametral pitch	Flank depth	Root depth
4.00	.040	.030
3.50	.050	.035
3.00	.060	.040
2.50	.075	.050
2.00	.100	.070
1.75	.125	.080
1.50	.150	.100

Backlash

Proper backlash must be provided in any pair of gears. This is especially true of bearing gears, where large diameters and large center distances require greater manufacturing tolerances. Therefore, the allowance for backlash must be sufficient to allow for these greater tolerances. Typical backlash allowances are shown in Table 19.

Table 19

Gear Pitch Dia.	Minimum Backlash (in.)	Maximum Backlash (in.) Diametral Pitch				
		1.5	1.75	2	2.5	3,4,5
20	.014	.029	.027	.025	.023	.022
30	.015	.030	.028	.026	.024	.023
40	.016	.031	.029	.027	.025	.024
60	.018	.033	.031	.029	.027	.026
80	.020	.035	.033	.031	.029	.028
100	.022	.037	.035	.033	.031	.030
120	.024	.039	.037	.035	.033	.032

Other factors bear on the machine designer's decision whether or not to provide backlash by adjustment of center distance between gear and pinion. But the cost advantages of adjustment should be kept in mind. Gear size tolerance can be greater and life can be extended by take-up for wear.

Storage before installation

There is no need for special care or lubrication of Kaydon Turntable Bearings before being put into service. They are packed with general purpose grease at the factory and are sealed to exclude ordinary foreign matter. However, they should be kept in the shipping container in a horizontal position until time for installation. Outdoor storage is not recommended and if installation is not made within a year, new grease should be introduced.

External surfaces of turntable bearings, including the gear, are coated with a preservative oil to give them nominal protection during storage.

Installation

Installation of the bearing/gear assembly should be done in a clean, dry, well-lighted area. Mounting surfaces and pilots of the housings should be unpainted and wiped clean of chips, dirt, and lint, since even "soft" material when entrapped will act as high spots. When this has been done, examine for and remove weld spatter, nicks and burrs and wipe clean again. The bearing may now be unwrapped and lifted or hoisted into position. Use eye bolts in mounting holes or nonmetallic slings to avoid damage to bearing mounting faces and pilots, and to gear teeth.

Inherent in the hardening process of most turntable bearings is a small gap at one point in the raceway. The loading hole (see Page 26) is drilled through this gap. The location in the mating race is steel stamped "G" on the seal face. Hardening gaps and load hole plugs in races with through holes should be positioned at minimum load points if possible. LOAD HOLE PLUGS IN RACES WITH TAPPED HOLES OR WELD RINGS MUST BE SO POSITIONED. With the rotating race, this may be done by placing the loading hole 90° from the maximum load zone due to moment loading. With the stationary race the position will depend upon the location of the lightest load relative to the lower structure of the machine.

*SAE Grade 8 or better bolts should be used to ensure adequate bolt strength

For good internal load distribution and smooth, low torque operation, the bear-ing should be as round as possible when the bolts are tightened. If one of the races is doweled or piloted, it should be mounted first whenever possible. On unpiloted, gear bearings the gear/pinion backlash should be checked and adjusted to the desired amount. The minimum backlash point of the gear is identified by yellow paint in the tooth space. We recommend the following procedure to assure trouble-free operation:

- Leave all mounting bolts loose until both mating parts are attached to the bearing.
- While applying a moderate centered thrust load to the bearing, measure the torque to rotate the bearing.
- Then tighten all bolts to the level prescribed by the bolt manufacturer. **THIS IS VERY IMPORTANT. Improperly tightened bolts can fail due to fatigue; such failure can cause damage to equipment and endanger human life.**
- Again measure the torque required to rotate the bearing.
- If greater than the first measurement this indicates that the bearing is being distorted. Determine and correct the cause.

Gears on fixed centers may now be checked for backlash, and pinions on adjustable centers set for proper backlash.

When all backlash checks are completed, the gear should be given a coating of grease suitable for the operating conditions, and rotated to assure coverage of all contacting surfaces with the pinions.

Complete installation of all rotating components of significant weight, and check bearing for freedom of rotation. Excessive torque level or variation is indicative of some unsatisfactory installation condition.

Relubricate the bearing prior to shipment of the machine.

***NOTE:** For installation procedure for weld ring bearings contact your Kaydon Representative or Kaydon factory.

Maintenance

While Kaydon turntable bearings require almost no attention, what little they are given will pay big dividends

*See warranty, page 33.

in long life, high performance, and trouble-free service.

Relubrication of the bearing is recommended every 100 operating hours for relatively slow rotating or oscillating applications such as backhoes, excavators, and cranes. In more rapidly moving or continuously rotating machinery such as trenchers, borers, and distributors the bearing should be lubricated every day, or every 8 hours if on round-the-clock service.

Idle equipment should not be neglected. Grease dries out and "breathing" due to temperature changes, can cause condensation within the bearing. Whether used or not, the bearing should have grease introduced every 6 months. It is always a good idea to rotate the bearing a few turns to coat all surfaces with fresh grease.

There is a tendency to take much better care of the bearing than of the gear. This may be due to the rather crude gears used in the past. The meshing action and usual position of the gear tends to purge the lubricant; thus, the gear should be regreased frequently with a small amount of lubricant. The gear is deserving of good care and will return the favor in long, smooth quiet service. It is recommended that grease be introduced at the point of mesh of pinion and gear every 8 hours of slow or intermittent operation, and more often for rapidly or continuously rotating applications.

The cyclic nature of the loading on the mounting bolts gives rise to the possibility of their working loose or to inelastic deformation of the threads and other stressed surfaces. Bolts should be checked periodically and retightened to the proper level.

***THIS IS A VERY IMPORTANT SAFETY PRECAUTION.**

Part II—Installation (For Guidance of the Equipment Builder)

Refer to Part I to determine that the designer has properly applied the bearing and made provision for proper installation. But keep in mind that the best design in the world can fail to live up to its potential if the execution of the design by the builder is faulty.

Before installation

Recognize the vital role of the bearing/gear and the fastening means (bolts or welds).

Prepare detailed and clear instructions to the tradesmen. If bolts are to be used as the means of attachment, conduct necessary tests to prove the method of pretensioning. Check to see that the bolts carry not only the standard SAE grade code but also a positive means of identifying the manufacturer. The code for SAE Grade 8 is 6 radial lines on the top of the hex head.

If the bearing is to be attached by welding, conduct the necessary tests to prove that the specified joint will be developed by the intended method.

Provide a clean, dry, well-lighted area for performance of the installation work.

Keep the bearing wrapped in its original wrapping until all preparations have been made for its installation.

When handling individual bearings use eye bolts in mounting holes. If the bearing must be turned over or slings are used for other reasons, use nylon web slings or equivalent to avoid damaging the bearing mounting surfaces, the gear, or the seals. Do not use chains or metallic mesh slings in contact with the bearing!

During installation

Wipe equipment mounting surfaces and pilots clean of chips, dirt, and lint. Even "soft" material when entrapped will act as high spots.

Examine for and remove weld spatters, nicks, and burrs. If surfaces have been painted, remove completely. Unpackage the bearing; wipe free of all foreign matter; visually inspect for damage in shipping.

Recheck bolt tightness. The reason for any loss of pretensioning must be determined and eliminated.

If equipment is not delivered immediately, introduce fresh grease into the bearing until grease can be seen exuding from seals. Move bearing in rotation several times to ensure a complete fill. Repeat every 6 months on idle equipment.

Remove any minor burrs from mounting surfaces caused in shipping or handling. Use a hand file, taking care to remove only as much material as necessary to insure full contact of bearing surface with equipment mounting surface. **DO NOT DISASSEMBLE BEARING** without express approval of and instruction from Kaydon. Removal of loading hole plug voids our warranty.

Wipe bearing and equipment mounting and pilot surfaces clean once more.

Lift bearing into position for installation. Rotate races to align loading hole plug (in ungeared race) and stamped "G" (on gear race) in accordance with your designer instructions.

Install bearing in manner and sequence prescribed by your designer paying particular attention to the gear mesh, to free entry of bolts into bolt holes, to the bolt pretensioning, and to changes in bearing torque. Determine reason for and eliminate any problems with any of these items before proceeding. Do not distort

*See warranty, page 33.

the bearing to permit bolts to enter holes that do not line up. Welding instructions for attachment of weld-ring bearings must incorporate every detail including, but not limited to welding rod, protective material and/or atmosphere, all machine settings, tacking procedure, preheating, heating while welding, post-heating, number of passes and inspection procedures.

When all backlash checks are complete, the gear should be given a coating of grease suitable for the operating conditions and rotated to assure coverage of all contacting surfaces with the pinions.

Complete installation of all rotating components of significant weight, and check bearing for freedom of rotation. Excessive torque level or variation is indicative of some unsatisfactory installation condition.

*After installation

When equipment has been completely assembled, and before testing, check bolt tightness. The reason for loss of pretensioning beyond a reasonable amount for seating of mounting surfaces and threads must be determined and eliminated. Conduct required tests.

*Recheck bolt tightness. The reason for any loss of pretensioning must be determined and eliminated.

Relubricate the bearing prior to delivery of the machine. Introduce fresh grease into the bearing until grease can be seen exuding from the seals. Move bearing in rotation several times to insure a complete fill. Repeat every 6 months on idle equipment.

*Kaydon recommends that the Owner's Manual prepared by the equipment builder be submitted to the Kaydon Engineering Department for review and approval of the sections relating to the bearings and gears supplied by Kaydon.

Part III - Use & Care (For Guidance of Equipment Owner and/or User)

While Kaydon Turntable Bearings require almost no attention, what little they are given will pay big dividends in long life, high performance, and trouble-free service.

Before Use

If you cannot be sure that the bearing/gear has been lubricated within the past six months or after 100 hours of operation, introduce fresh grease in accordance with equipment manufacturer's instruction manual (owner's manual).

*During Use

- Relubricate bearing and gear in accordance with Owner's Manual.
- Inspect seals, making certain that they are in proper position in grooves and intact.
- Retighten mounting bolts in accordance with Owner's Manual. **THIS IS A VERY IMPORTANT PRECAUTION.**
- Be alert to changes in torque, unusual sounds, vibrations.

*See warranty, page 33.

Custom Bearing Application Data

Fax to us at 231-759-4102

Please answer the questions on this form as completely as possible, include a drawing (or sketch) of the application if available. Be sure to show all parts and information relevant to the application. The data you supply is the basis for our recommendation. There's no obligation on your part, of course.

To Kaydon Corporation
P.O. Box 688–Muskegon, Michigan 49443
Date: _____

From Name: _____ Title: _____
Company: _____ Telephone: _____
Address: _____
Application: _____
❑ Experimental ❑ Prototype ❑ Production ❑ Spec. Machine ❑ Other
❑ Original Equipment Mfg. ❑ Replacement ❑ Own Use ❑ Resale
Annual Usage: _____ Quotation Quantity: _____

Loads

Condition	Loads			RPM		Percent of Time
	Axial	Radial	Moment	Max.	Mean	
1						
2						
3						
4						
5						
6						
7						
8						
9						
10						

Vibration or shock? _____ Describe _____
Factor of Safety of _____ (is) (is not) included in loads above.

Life Hours (Min.) _____ Hours (Avg.) _____ Other _____

Temperature Normal Operating _____ °F Minimum _____ °F Maximum _____ °F
Differential between shaft and housing _____

Lubrication Proposed lubricant _____ and method _____

Bearing Preferred Size: Bore _____ Outside Dia. _____ Width _____
Min. Bore _____ Max. Outside Dia. _____ Max. Width _____
Preferred Type: _____
Bearing Axis in (Vertical) (Horizontal) position with (Outer) (Inner) race rotation relative to load.

Gear Internal or External Tooth Form PD DP Face Width

Special requirements (Materials, Torque, Oscillating Motion, Accuracy Seals, Protective Coatings, etc.) _____

Date required _____

Comments: _____

Warranty

Seller warrants the products manufactured by it to be free from defects in materials and workmanship only. The extent of Seller's obligation hereunder is to either repair or replace its work or the defective products, F.O.B. Seller's plant, if returned within 12 months after date of delivery. No allowance will be granted for repairs or alterations made by Buyer without Seller's written approval. The warranty shall not be construed to cover the cost of any work done by Buyer on material furnished by Seller or the cost of removal or installation of product. Products and parts not manufactured by Seller are warranted only to the extent and in the manner that the same are warranted to Seller by Seller's vendors and then only to the extent Seller is able to enforce such warranty. There is no other warranty, express or implied in fact or by law.

THE FOREGOING STATES THE SOLE AND EXCLUSIVE WARRANTY OF BUYER AND THE SOLE AND EXCLUSIVE WARRANTY OF SELLER. THE WARRANTIES STATED IN THIS PARAGRAPH ARE IN LIEU OF ALL OTHER WARRANTIES, WRITTEN OR VERBAL STATUTORY, EXPRESSED OR IMPLIED, INCLUDING WARRANTIES OF MERCHANTABILITY AND FITNESS FOR A PARTICULAR PURPOSE, WHICH ARE HEREBY DISCLAIMED.

Seller's agreement to sell the products is made upon the condition and agreement that, with respect to the products, there have been no representations or undertakings made by or on behalf of Seller and Seller makes no guarantees or warranties, expressed or implied, in fact or in law, except as expressly stated above.

Changes

Kaydon reserves the right to change specifications and other information (included) in Kaydon bulletins without notice. We recommend that you contact your District Sales Engineer or Kaydon to be sure the information you have is current.

Errors

All information, data, and dimension tables in this manual and Kaydon bulletins have been carefully compiled and thoroughly checked. However, no responsibility for possible errors or omissions can be assumed.

Important Notice

Because of possible danger to persons or property from accidents which may result from the use of the products described in this catalog, it is important that good design practices and correct procedures be followed. The products must be used in accordance with the engineering information provided herein; and proper installation, lubrication, maintenance, and periodic inspection must be assured.

It is strongly recommended that appropriate instructions be incorporated in equipment manuals to assure safe operation under all conditions. Proper guards and other suitable safety devices or procedures as may be desirable or as may be specified in safety codes should be provided, and are neither provided by Kaydon nor are the responsibility of Kaydon.

The product capability statements and engineering specifications in this catalog supersede those published in all prior product publications.

***WARNING—Damage to equipment and danger to human life can result from failure to heed the recommendations in the text identified by the warning symbol.**

Application Information to Help In Your Designs

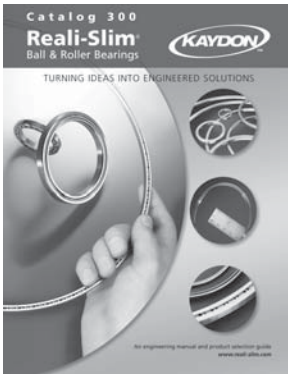

1. Reali-Slim® thin-section bearings catalog

Complete engineering and selection information on the entire product line, including Metric Reali-Slim® and Ultra-Slim series. Request **Catalog 300**.

2. An illustrated mounting guide for Reali-Slim® bearings

Gives ideas on how to improve designs through better mounting and use of bearing assemblies. 24-pages. Request **Catalog 306**.

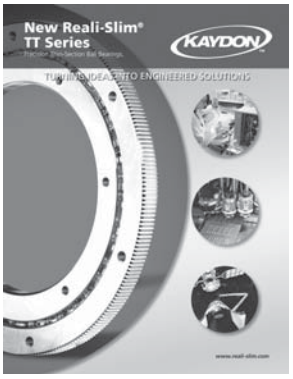

3. Kaydon's new generation of miniature precision thin-secton turntable bearings.

Request New Reali-Slim® Turntable Series 6-page brochure.

4. Reali-Design™ software on CD

Speeds Reali-Slim® bearing selection process. Includes data sheets, life calculations, CAD-ready DXF library, and metric conversions.

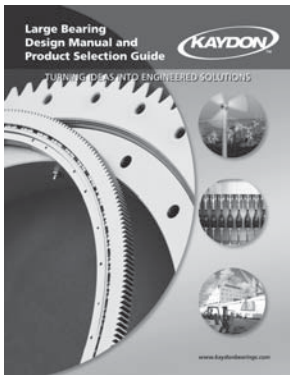

5. Large turntable bearing catalog

Complete engineering and selection information on standard and custom turntable bearings. 32-pages. Request **Catalog 390**.

6. Worm drive rotation systems

Selection guide for pre-tested, compact bearing/worm assemblies for light-to-medium duty applications. 4-pages. Request **Catalog 308**.

NEW!

For latest releases: catalog, software, or CAD drawing downloads, visit our website at www.reali-slim.com.

Contact us for a no-obligation design review

No matter what your design, we can assess your needs and recommend the right bearing assembly to best meet your particular performance requirement. Just call us at 1-800-514-3066 to get started.

2860 McCracken Street
Muskegon, Michigan 49441 U.S.A.

ISO 9001

Phone: (231) 755-3741 • Fax: (231) 759-4102
Need Service Fast? For Design Assistance, call 1-800-514-3066 • Visit our website: www.turntablebearings.com

Printed in U.S.A.
Catalog No. 890

www.bergab.ru Берг АБ bergab@ya.ru Тел. (495)-228-06-21, факс (495) 223-3071