www.bergab.ru Берг АБ prom@bergab.ru Тел.(495)-228-06-21,факс (495) 223-3071

HepcoMotion®

HTS
telescopic ball
bearing slides

HEPCO®
www.HepcoMotion.com

www.bergab.ru Берг АБ prom@bergab.ru Тел.(495)-228-06-21,факс (495) 223-3071

Contents

Introducing the HepcoMotion® HTS

Feature and Benefits — 1

CONSTRUCTION — 2

EXPLANATION OF TERMS

Load Rating — 2
Load Rating and Duty Cycle — 2
Safety — 2
Travel (Extension) — 3
Linear Motion — 3
Lever Disconnect — 3
Lock-out — 3
Retaining Spring — 3
Guide Bar — 3

RECOMMENDED APPLICATIONS — 3

STANDARD MATERIAL SPECIFICATIONS — 3

ORDERING INFORMATION — 3

MOUNTING — 4

CUSTOMIZED SLIDES — 4

FEATURE REFERENCE TABLE — 5

SLIDE SERIES

Super Slim — 6–10
Medium Light — 11–16
Medium — 17–23
Compact — 24–29
Heavy duty — 30–35

Introducing the HepcoMotion®

HTS Hepco Telescopic Ball Bearings Slides

Hepco telescopic ball bearing slides are manufactured under strict quality control conditions backed by ISO 9002 certification using the highest quality materials and up to date manufacturing processes. These high quality slides are quiet, rigid under extended loads and due to the superior construction offer excellent smooth motion and low friction characteristics across the complete travel length.

A reference table showing the complete range can be seen on page 5, each series having specific cross section and load carrying characteristics from Super Slim lightweight versions to Heavy Duty Units to carry 280kg

Deliveries across the whole range are highly competitive but for maximum convenience we do stock the more popular series slides and these are highlighted in the catalogue as STOCK SERIES . This standard range of precision slides are used in in all sectors of industry from one off installations to volume series requirements.

Any quantity can be supplied whether one pair or a thousand pairs HTS is a highly competitive solution for you telescopic slide requirements.

Features and Benefits

- 5 basic ranges from light loads to heavy duty
- Range of options available, lock out, disconnect etc.
- Specific ranges available from stock
- Rigid member recirculating ball bearing slide structure maintains smooth motion over entire travel
- High static capacity from rigid structure with minimal deflection
- Quality cold rolled steel members with slotted mounting holes for quick installation
- Exceptional accuracy from precision pressed slide rails
- 3 member slide series for higher capacity in narrow space

Construction

• 2 Member Slide

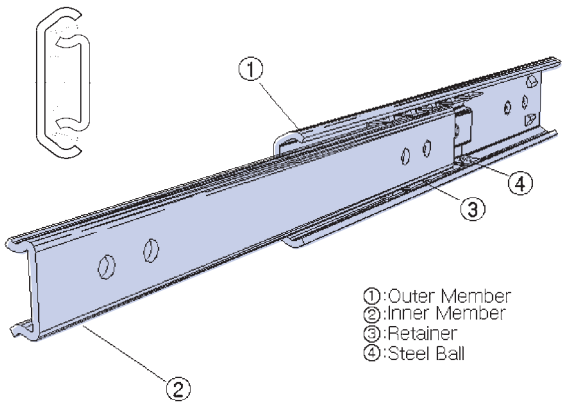

• 3 Member Slide

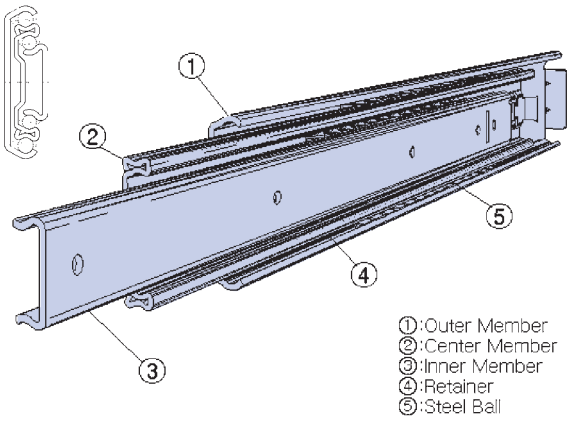

Explanation of terms

Load rating

Load rating is the maximum recommended load for a pair of slides. Slides are side-mounted and based on a 10,000 cycle dynamic test. This test is based on the centre of gravity of the load being in the mid-point of the complete open travel and in the middle of the drawer (drawer width is 400 mm). For drawer widths in excess of 400mm please contact our technical department.

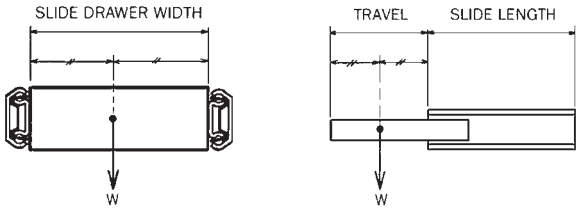

Load rating & duty cycle

Load rating and duty cycle are closely related. Load rating should be looked at in conjunction with the number of cycles i.e. high duty cycle will result in a reduction of the load rating by the factors shown in the table. Also, under-mounting or bottom mounting of slides is not recommended because this will greatly reduce the load rating to approximately 1/4 the standard load rating.

Load rating × 1 Load rating × 0.25 max

Duty cycle	Recommended rating
10,000 ×	load rating × 1
50,000 ×	load rating × 0.8
100,000 ×	load rating × 0.7
500,000 ×	load rating × 0.5
1,000,000 ×	load rating × 0.2

Safety

Hepco test slides to withstand a static load 2 times the standard load rating at full travel (open position). Also, slides are designed to withstand a static load 4 to 5 times the standard load rating in the closed position.

Explanation of terms cont.

Travel (Extension)

3/4 Travel - slide extends approximately 3/4 of the total slide length, for applications not requiring complete access to drawer/components.

Over Travel - slide extends further than the length of the slide allowing total and easy access to the drawer/components, often a convenient feature.

Both Side Travel - slide is able to extend in either direction allowing access to drawer or components from either side of the cabinet.

Linear Motion - contains an inner moving member which movement is restricted to within the slide.

Lever Disconnect - Actuate the latch and the drawer can be removed from the main unit.

Lock-Out - Locks the slide in the open position preventing accidental closure and can be released when actuated by the latch.

Retaining Spring - Locks the center member of a three member slide in the open position preventing accidental closure and can be released when actuated by the latch.

Guide Bar - Allows easy reassembly of disconnected drawer.

Recommended Applications

- IT appliances & equipment
- Automation equipment, instruments, facilities
- Medical equipment
- Office automation equipment
- Fire appliance equipment & facilities
- Measuring equipment
- Other industrial precision equipment
- Banking equipment

Standard Material Specifications

- Slide members & ball retainers : Cold rolled steel
- For high consistency, we only use centercut cold rolled steel
- Ball bearings : High carbon steel
- Finish : Bright electro zinc plate
- Lubricant : Hi-Lo temperature grease
- Temperature range : -40F(-4C)to+130F(+55C)

Ordering Information

Telescopic Ball Bearing Slides are generally used in pairs however catalogue part numbers relate to an individual Slide and are priced accordingly.

Mounting

To acheive smooth running;

- Maintain parallelism between rails
- Secure balance by drawing in and out with 5–6Kg weight load before fixing.

Examples of mounting

A : Recommended

B : Not Recommended, but usable

C : Not Recommended

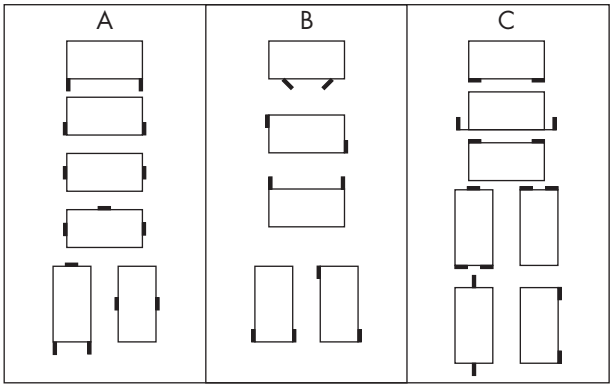

Customized Slides

- Provide the solution to your suspension or movement requirements as shown below.
- The following are only some of the ways Slide rails can be customized to suit your application. Please contact our technical department for further information.

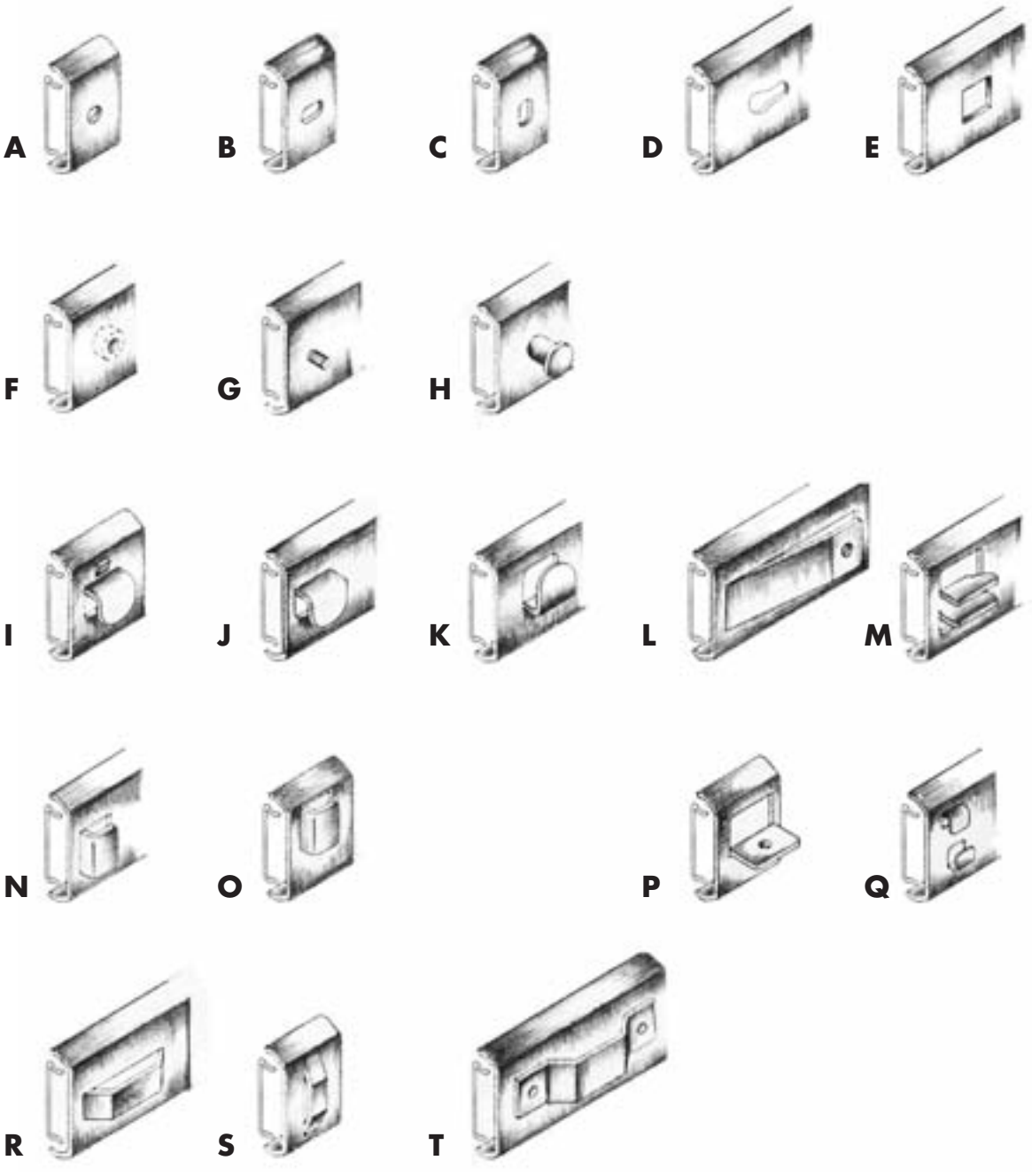

www.bergab.ru
Берг АБ prom@bergab.ru Тел.(495)-228-06-21,факс (495) 223-3071

Illustrations not to scale

SERIES	Super Slim		Medium Light			Medium				Compact		Heavy Duty	
Height (mm)													
74.1 / 56.3 / 55.3 / 47.2 / 35.3 / 27 / 20	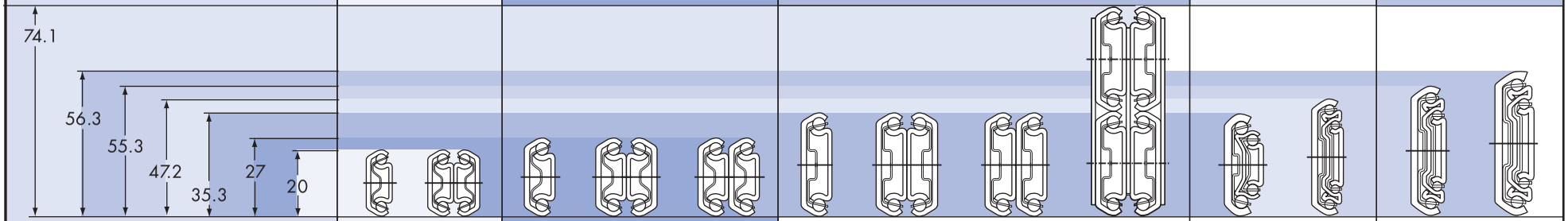												
Width (mm)	8.0	16.0	9.6	19.2	19.2	9.6	19.2	19.2	23.8	13.0	13.0	12.7	16.0
LOAD RATING Maximum 280kg / 120kg / 100kg / 70kg / 50kg / 20kg Minimum	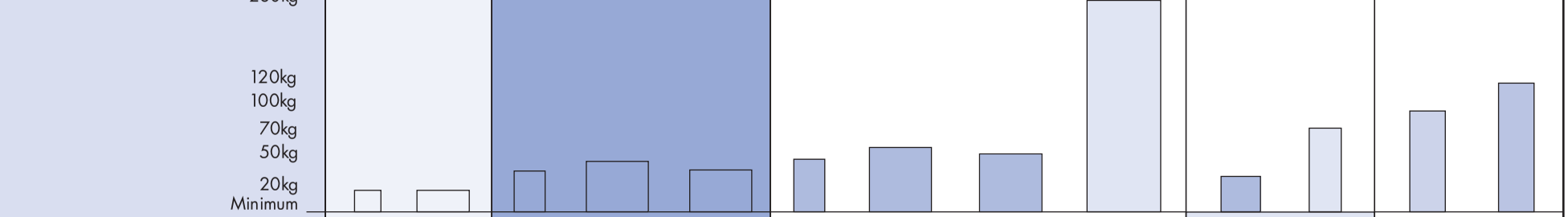												
Rating at min travel	20kg	20kg	38kg	47kg	39kg	49kg	60kg	54kg	280kg	33kg	76kg	94kg	120kg
Rating at max travel	15kg	15kg	20kg	31kg	26kg	25kg	45kg	41kg	190kg	23kg	52kg	72kg	87kg
MODEL/NUMBER													
Both Side Travel	TS–2020					TS–3520							
Linear Motion	TS–2011					TS–3511							
3/4 travel													
• Non-Disconnect	TS–2021		TS–270			TS–3521							
			TS–U270										
• Lever Disconnect	TS–2024		TS–2724			TS–3524							
• Lever Disconnect/Lock-Out	TS–2025		TS–2725			TS–3525							
Over travel													
• Non-Disconnect		TS–2031		TS–273			TS–3531		TS–3561	TS–350	TS–470	TS–550	TS–560
				TS–U273									
• Lever Disconnect										TS–352	TS–472	TS–552	TS–562
• Lever Disconnect/Lock-Out					TS–2737		TS–3535			TS–355	TS–475	TS–555	TS–565

TS–2011 LINEAR MOTION SLIDE

Model TS–2011

- Linear motion
- Load rating (per pair)
  20kg at min travel
  15kg at max travel
- #4(M3) pan head screw
- Non-disconnect

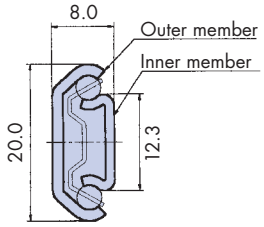

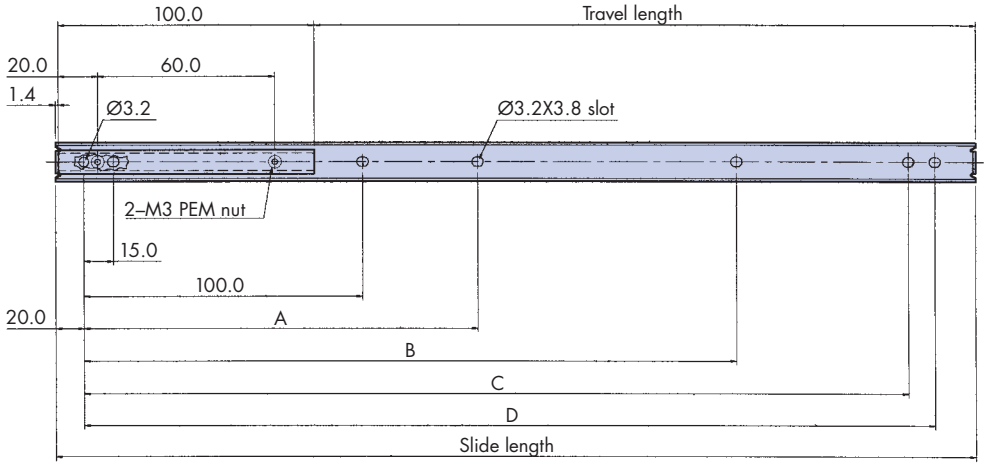

Part number	Slide length	Travel length	Hole length mm				Slide weight kg/pair
			A	B	C	D	
TS–2011–200	200.0	97.0	–	–	145.0	160.0	0.27
TS–2011–250	250.0	147.0	–	–	195.0	210.0	0.36
TS–2011–300	300.0	197.0	–	160.0	245.0	260.0	0.44
TS–2011–350	350.0	247.0	–	210.0	295.0	310.0	0.53
TS–2011–400	400.0	297.0	–	260.0	345.0	360.0	0.61
TS–2011–450	450.0	347.0	205.0	310.0	395.0	410.0	0.69
TS–2011–500	500.0	397.0	230.0	360.0	445.0	460.0	0.79

TS–2020 DISCONNECT BOTH SIDE TRAVEL SLIDE

Model TS–2020

- Both side travel
- Load rating (per pair)
  20kg at min travel
  15kg at max travel
- #4(M3) pan head screw
- Disconnect

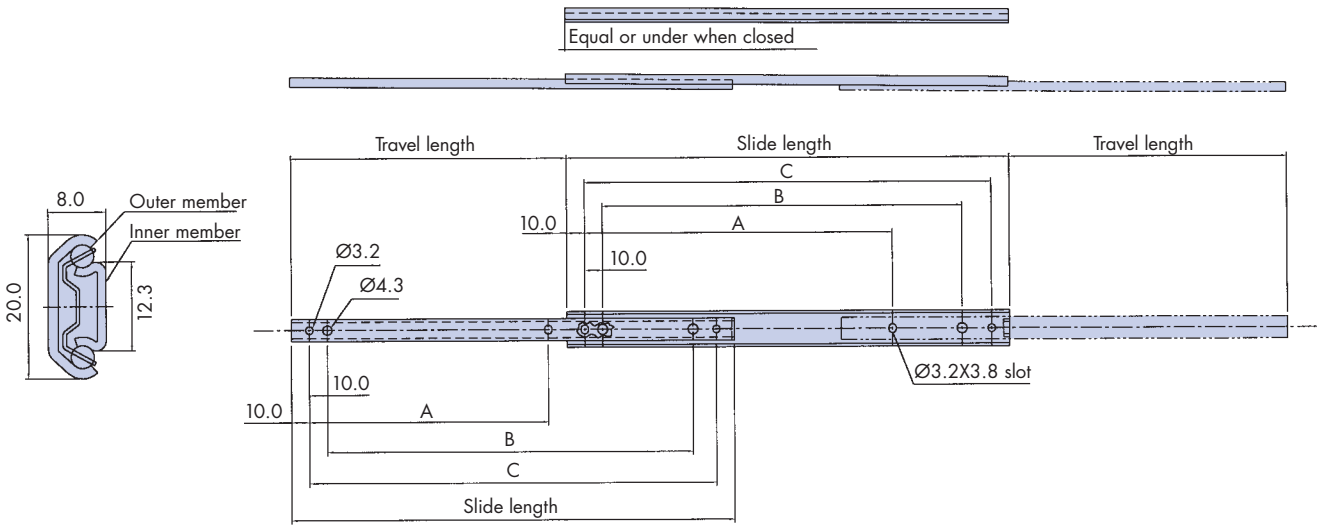

Part number	Slide length	Travel length	Hole length mm			Slide weight kg/pair
			A	B	C	
TS–2020–70	70.0	15.0	–	30.0	50.0	0.16
TS–2020–100	100.0	25.0	–	60.0	80.0	0.18
TS–2020–150	150.0	45.0	–	110.0	130.0	0.20
TS–2020–200	200.0	75.0	90	160.0	180.0	0.27

TS–2021 3/4 TRAVEL SLIDE

Model TS–2021

- 3/4 travel
- Load rating (per pair)
  20kg at min travel
  15kg at max travel
- #4(M3) pan head screw
- Non-disconnect

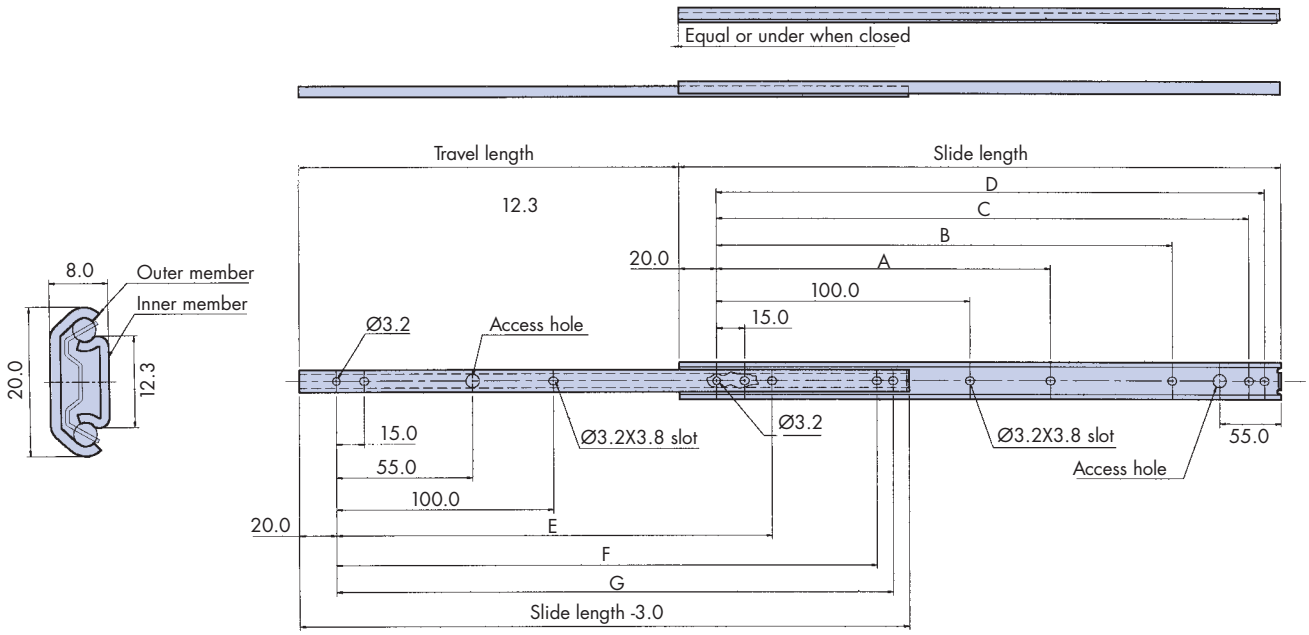

Part number	Slide length	Travel length	Hole length mm							Slide weight kg/pair
			A	B	C	D	E	F	G	
TS–2021–200	200.0	134.0	–	–	145.0	160.0	–	145.0	160.0	0.27
TS–2021–250	250.0	184.0	–	–	195.0	210.0	150.0	195.0	210.0	0.36
TS–2021–300	300.0	224.0	–	160.0	245.0	260.0	190.0	245.0	260.0	0.44
TS–2021–350	350.0	244.0	–	210.0	295.0	310.0	225.0	295.0	310.0	0.53
TS–2021–400	400.0	294.0	–	260.0	345.0	360.0	265.0	345.0	360.0	0.61
TS–2021–450	450.0	334.0	205.0	310.0	395.0	410.0	300.0	395.0	410.0	0.69
TS–2021–500	500.0	384.0	230.0	360.0	445.0	460.0	337.0	445.0	460.0	0.79

TS–2025 LEVER DISCONNECT LOCK OUT 3/4 TRAVEL SLIDE

Model TS–2025

- 3/4 travel
- Load rating (per pair)
  20kg at min travel
  15kg at max travel
- #4(M3) pan head screw
- Lever-Disconnect / Lock out

Model TS–2024

- 2024 version has no lock out

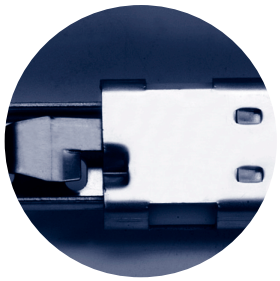

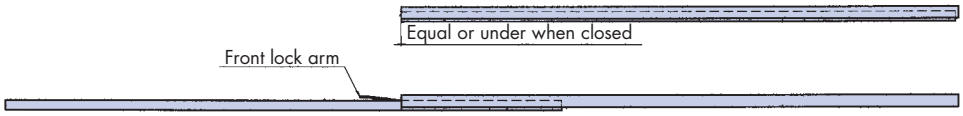

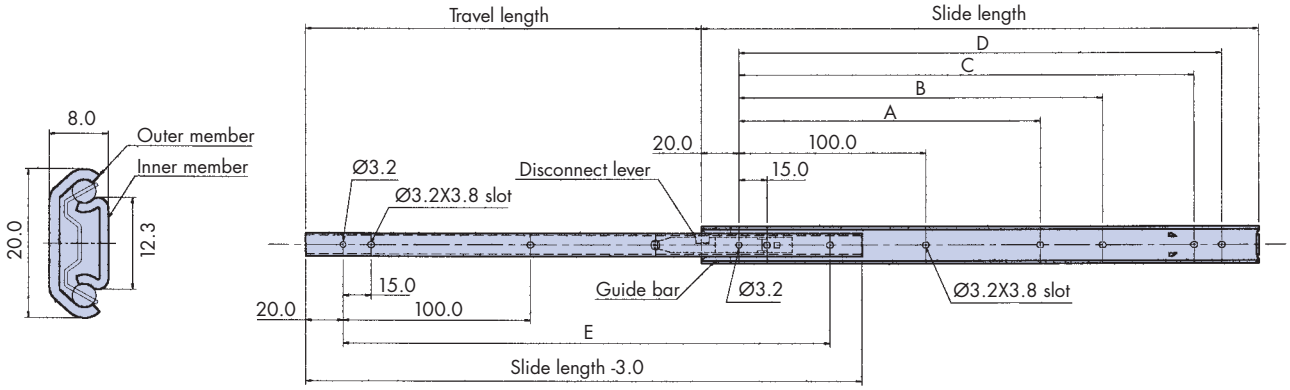

Part number	Slide length	Travel length	Hole length mm					Slide weight kg/pair
			A	B	C	D	E	
TS–2025–200 TS–2024–200	200.0	121.3	–	–	145.0	160.0	160.0	0.28
TS–2025–250 TS–2024–250	250.0	171.3	–	–	195.0	210.0	210.0	0.37
TS–2025–300 TS–2024–300	300.0	211.3	–	160.0	245.0	260.0	260.0	0.45
TS–2025–350 TS–2024–350	350.0	231.3	–	210.0	295.0	310.0	310.0	0.54
TS–2025–400 TS–2024–400	400.0	281.3	–	260.0	345.0	360.0	360.0	0.62
TS–2025–450 TS–2024–450	450.0	321.3	205.0	310.0	395.0	410.0	410.0	0.70
TS–2025–500 TS–2024–500	500.0	371.3	230.0	360.0	445.0	460.0	460.0	0.80

TS–2031 OVER TRAVEL SLIDE

Model TS–2031

- Over travel
- Load rating (per pair)
  20kg at min travel
  15kg at max travel
- #4(M3) pan head screw
- Non-disconnect

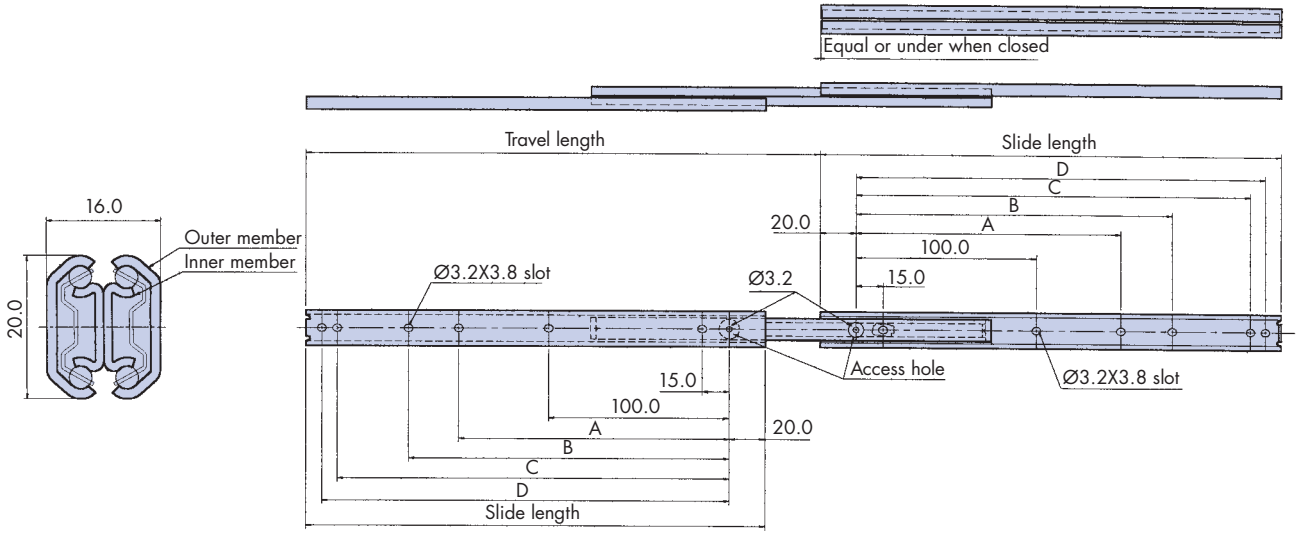

Part number	Slide length	Travel length	Hole length mm				Slide weight kg/pair
			A	B	C	D	
TS–2031–200	200.0	229.0	–	–	145.0	160.0	0.60
TS–2031–250	250.0	269.0	–	–	195.0	210.0	0.70
TS–2031–300	300.0	329.0	–	160.0	245.0	260.0	0.93
TS–2031–350	350.0	369.0	–	210.0	295.0	310.0	1.10
TS–2031–400	400.0	429.0	–	260.0	345.0	360.0	1.26
TS–2031–450	450.0	469.0	205.0	310.0	395.0	410.0	1.43
TS–2031–500	500.0	529.0	230.0	360.0	445.0	460.0	1.60

TS–U270 3/4 TRAVEL SLIDE (ALL STAINLESS STEEL)

Model TS–U270

- 3/4 travel
- Load rating (per pair) 29–38kg (see table)
- #8(M4) pan head screw
- Non-disconnect

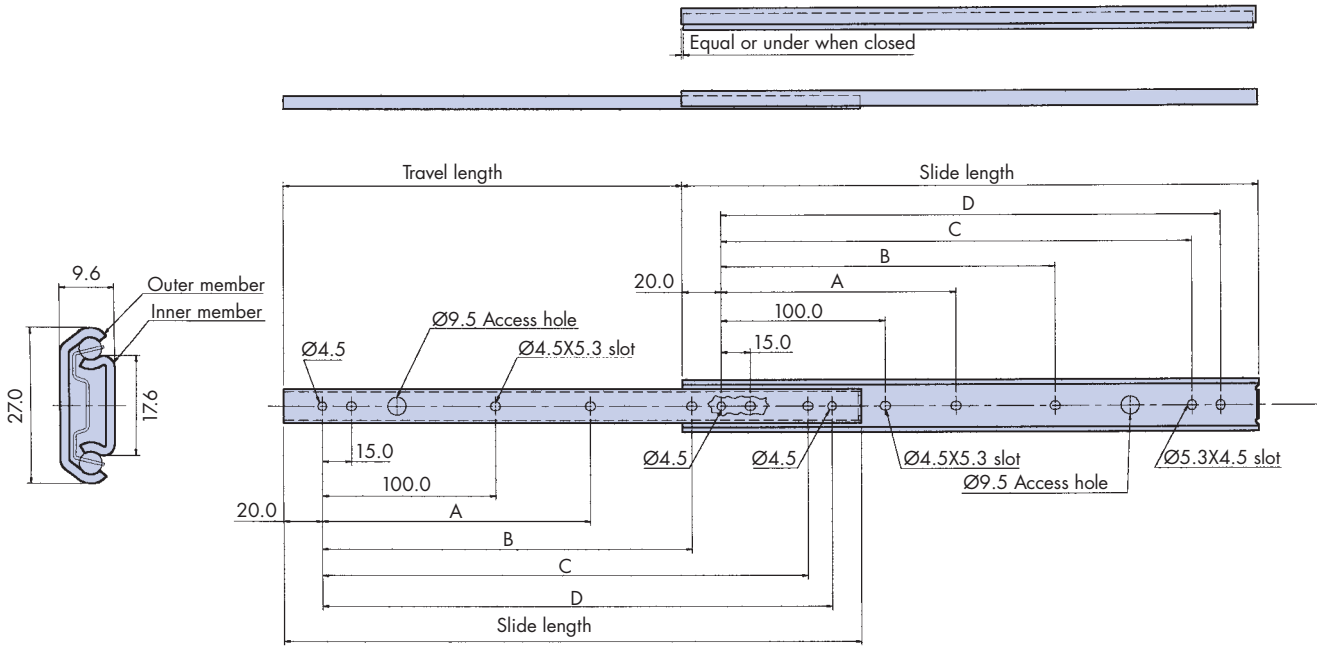

Part number	Slide length	Travel length	Hole length mm				Load Rating kg/pair	Slide weight kg/pair
			A	B	C	D		
TS–U270–200	200.0	134.3	–	–	145.0	160.0	38	0.55
TS–U270–250	250.0	171.6	–	150.0	195.0	210.0	37	0.60
TS–U270–300	300.0	221.6	–	190.0	245.0	260.0	35	0.65
TS–U270–350	350.0	258.9	–	225.0	295.0	310.0	33	0.75
TS–U270–400	400.0	296.2	–	265.0	345.0	360.0	32	0.86
TS–U270–450	450.0	333.5	205.0	300.0	395.0	410.0	30	0.96
TS–U270–500	500.0	370.8	230.0	337.0	445.0	460.0	29	1.07

www.bergab.ru Берг АБ prom@bergab.ru Тел.(495)-228-06-21,факс (495) 223-3071

TS–U273 OVER TRAVEL SLIDE (ALL STAINLESS STEEL)

Model TS–U273

STOCK SERIES

- Over travel
- Load rating (per pair)
  35–47kg (see table)
- #8(M4) pan head screw
- Non-disconnect

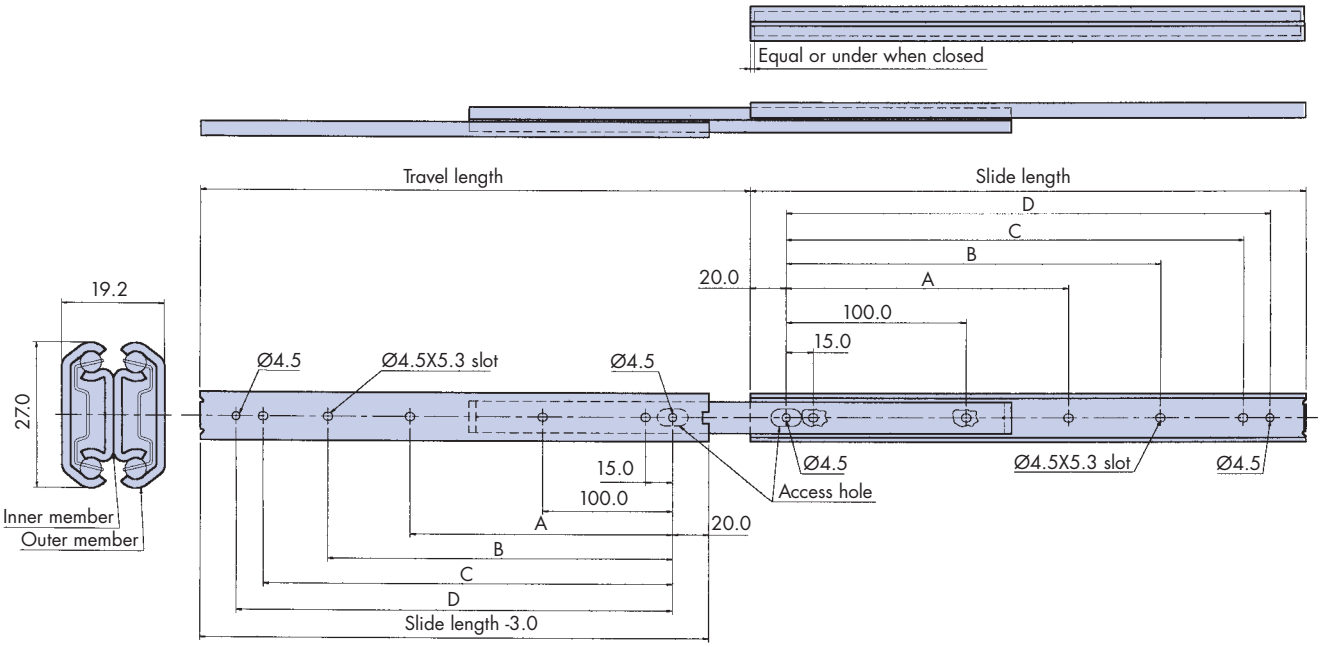

Part number	Slide length	Travel length	Hole length mm				Load Rating kg/pair	Slide weight kg/pair
			A	B	C	D		
TS–U273–200	200.0	217.8	–	–	145.0	160.0	47	0.8
TS–U273–250	250.0	267.0	–	150.0	195.0	210.0	46	1.0
TS–U273–300	300.0	316.2	–	190.0	245.0	260.0	44	1.2
TS–U273–350	350.0	365.4	–	225.0	295.0	310.0	42	1.4
TS–U273–400	400.0	414.6	–	265.0	345.0	360.0	40	1.5
TS–U273–450	450.0	463.8	205.0	300.0	395.0	410.0	37	1.7
TS–U273–500	500.0	513.0	230.0	337.0	445.0	460.0	35	1.9

TS–270 3/4 TRAVEL SLIDE

Model TS–270

- 3/4 travel
- Load rating (per pair)
  26–35kg (see table)
- #8(M4) pan head screw
- Non-disconnect

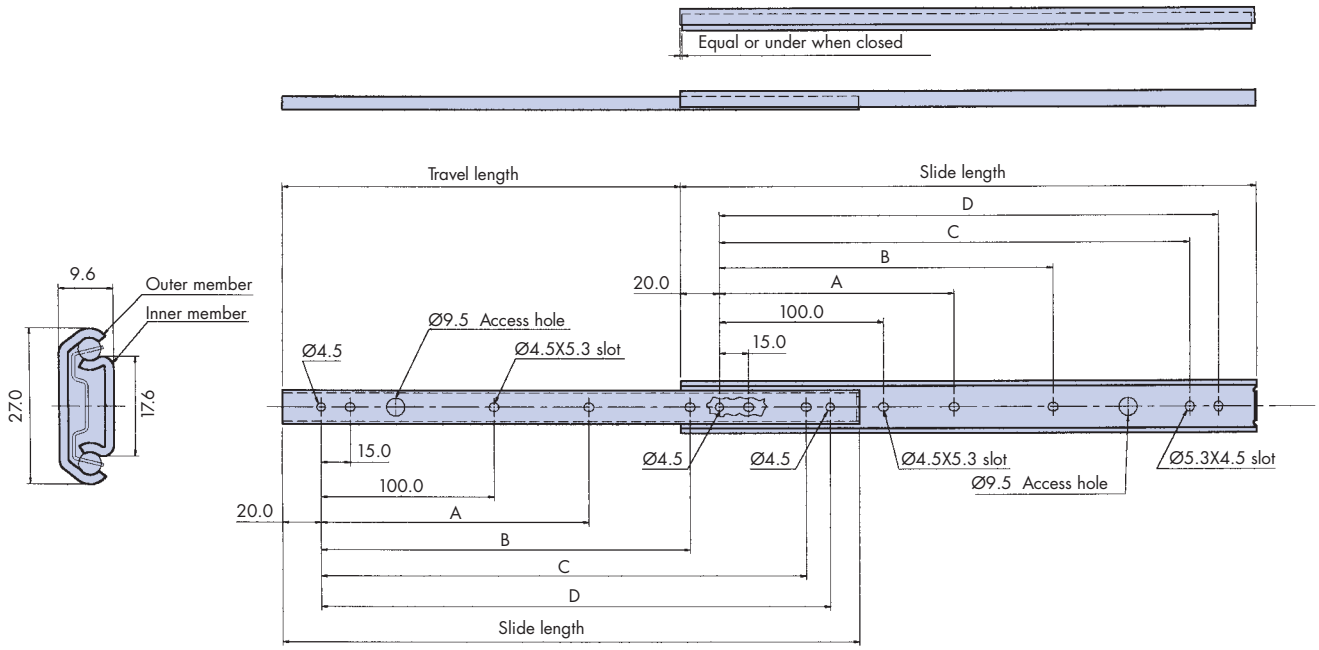

Part number	Slide length	Travel length	Hole length mm				Load Rating kg/pair	Slide weight kg/pair
			A	B	C	D		
TS–270–200	200.0	134.3	–	–	145.0	160.0	35	0.55
TS–270–250	250.0	171.6	–	150.0	195.0	210.0	34	0.60
TS–270–300	300.0	221.6	–	190.0	245.0	260.0	32	0.65
TS–270–350	350.0	258.9	–	225.0	295.0	310.0	30	0.75
TS–270–400	400.0	296.2	–	265.0	345.0	360.0	29	0.86
TS–270–450	450.0	333.5	205.0	300.0	395.0	410.0	27	0.96
TS–270–500	500.0	370.8	230.0	337.0	445.0	460.0	26	1.07

TS–2725 LEVER DISCONNECT LOCK OUT 3/4 TRAVEL SLIDE

Model TS–2725

- 3/4 travel
- Load rating (per pair) 20–30kg (see table)
- #8(M4) pan head screw
- Lever-disconnect / Lock-out

Model TS–2724

- TS–2724 version has no lock out feature

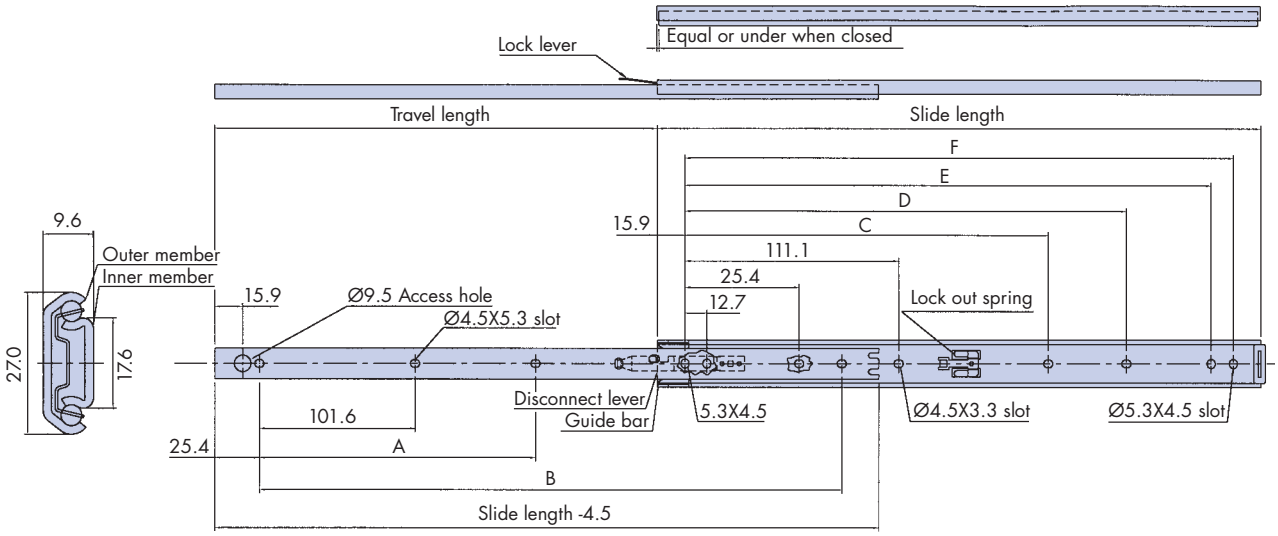

Part number	Slide length	Travel length	Hole length mm						Load Rating kg/pair	Slide weight kg/pair
			A	B	C	D	E	F		
TS–2725–12 TS–2724–12	304.8	203.0	–	254.0	–	149.2	260.3	273.0	30	0.60
TS–2725–14 TS–2724–14	355.6	254.4	–	304.8	–	200.0	311.1	323.8	29	0.70
TS–2725–16 TS–2724–16	406.4	305.2	–	355.6	–	250.8	361.9	374.6	28	0.81
TS–2725–18 TS–2724–18	457.2	330.6	203.2	406.4	212.7	301.6	412.7	425.4	27	0.91
TS–2725–20 TS–2724–20	508.0	381.4	228.6	457.2	238.1	352.4	463.5	476.2	25	1.02
TS–2725–22 TS–2724–22	558.8	406.4	254.0	508.0	263.5	403.2	514.3	527.0	24	1.12
TS–2725–24 TS–2724–24	609.6	432.2	279.4	558.8	228.9	454.0	565.1	577.8	22	1.24
TS–2725–26 TS–2724–26	660.4	483.0	304.8	609.6	314.3	504.8	615.9	628.6	21	1.34
TS–2725–28 TS–2724–28	711.2	508.0	330.2	660.4	339.7	555.6	666.7	679.4	20	1.44

TS–273 OVER TRAVEL SLIDE

Model TS–273

STOCK SERIES

- Over travel
- Load rating (per pair)
  31–41kg (see table)
- #8(M4) pan head screw
- Non-disconnect

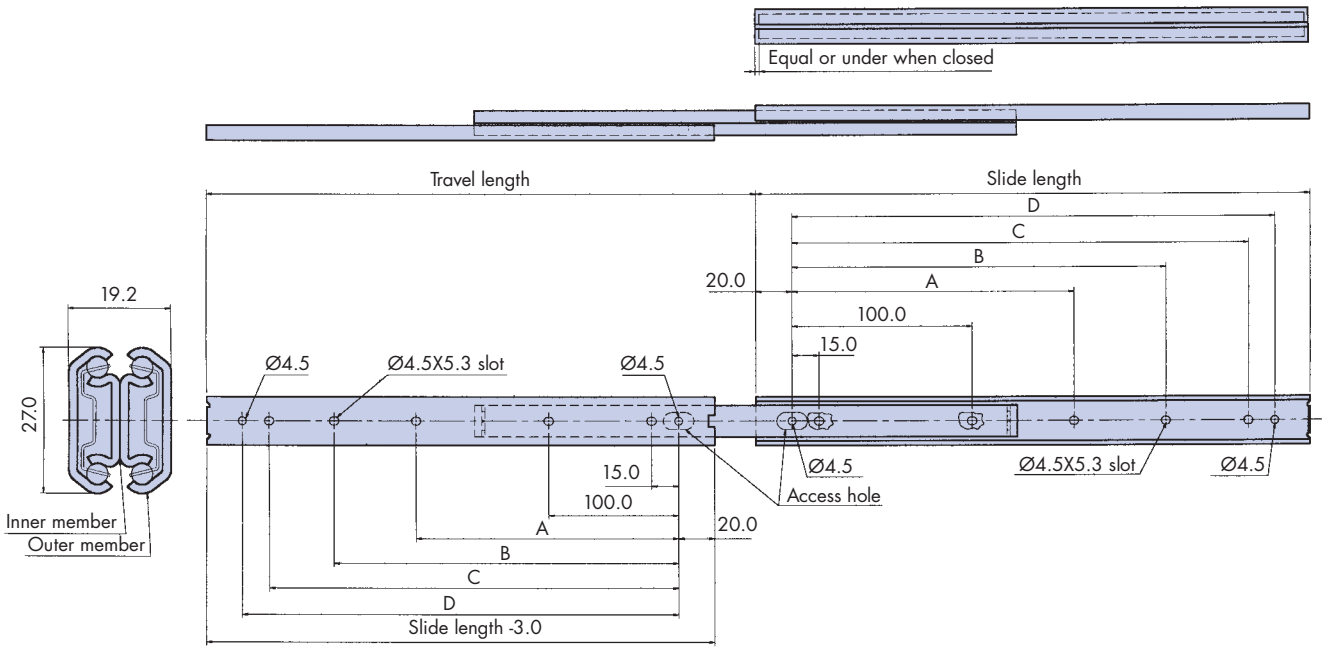

Part number	Slide length	Travel length	Hole length mm				Load Rating kg/pair	Slide weight kg/pair
			A	B	C	D		
TS–273–200	200.0	215.0	–	–	145.0	160.0	41	0.41
TS–273–250	250.0	264.4	–	150.0	195.0	210.0	40	0.45
TS–273–300	300.0	313.6	–	190.0	245.0	260.0	39	0.50
TS–273–350	350.0	362.8	–	225.0	295.0	310.0	37	0.60
TS–273–400	400.0	412.0	–	265.0	345.0	360.0	35	0.71
TS–273–450	450.0	461.2	205.0	300.0	395.0	410.0	33	0.79
TS–273–500	500.0	510.4	230.0	337.0	445.0	460.0	31	0.90

TS–2737 LEVER DISCONNECT LOCK OUT OVER TRAVEL SLIDE

Model TS–2737

- Over travel
- Load rating (per pair) 26–39kg (see table)
- #8(M4) pan head screw
- Lever-disconnect / Lock-out

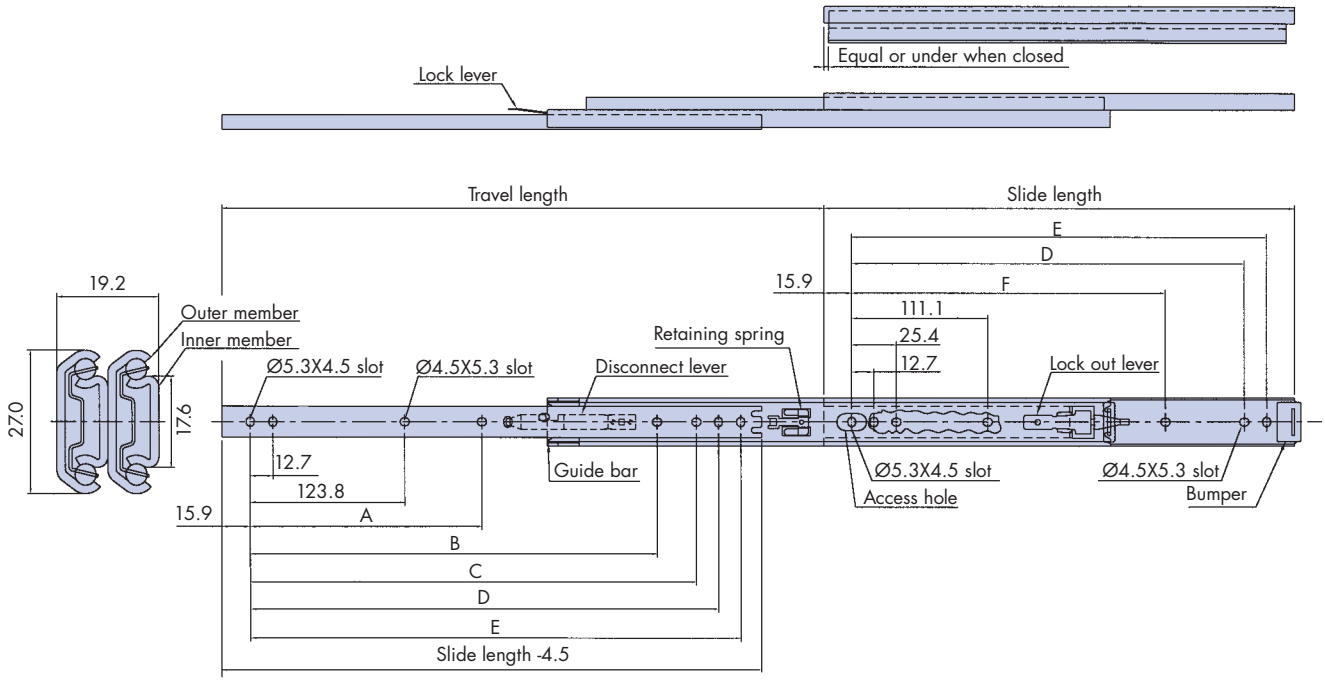

Part number	Slide length	Travel length	Hole length mm						Load Rating kg/pair	Slide weight kg/pair
			A	B	C	D	E	F		
TS–2737–12	304.8	327.0	–	–	–	260.3	273.0	–	39	0.52
TS–2737–14	355.6	378.0	–	–	298.4	311.1	323.8	–	37	0.62
TS–2737–16	406.4	429.0	–	–	349.2	361.9	374.6	250.8	35	0.73
TS–2737–18	457.2	480.0	212.7	–	400.0	412.7	425.4	301.6	33	0.81
TS–2737–20	508.0	530.0	238.1	365.1	450.8	463.5	476.2	352.4	31	0.92
TS–2737–22	558.8	581.0	263.5	415.9	501.6	514.3	527.0	403.2	29	1.10
TS–2737–24	609.6	632.0	228.9	466.7	552.4	565.1	577.8	454.0	28	1.24
TS–2737–26	660.4	683.0	314.3	517.5	603.2	615.9	628.6	504.8	27	1.34
TS–2737–28	711.2	734.0	339.7	568.3	654.0	666.7	679.4	555.6	26	1.45

www.bergab.ru Берг АБ prom@bergab.ru Тел.(495)-228-06-21,факс (495) 223-3071

TS–3511 LINEAR MOTION SLIDE

Model TS–3511

STOCK SERIES

- Linear Motion
- Load rating (per pair) 49kg
- #8(M4) pan head screw
- Non-disconnect

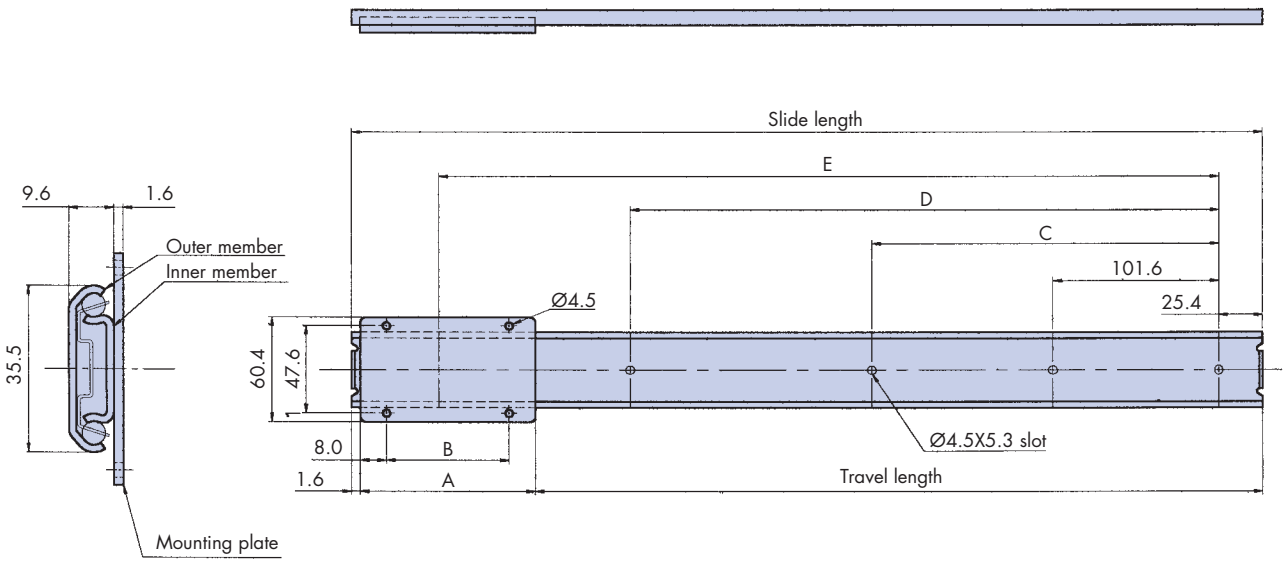

		X	Y	Z				
	A =	76.2	101.6	127.0				
	B =	60.2	85.6	111.0				
Part number	Slide length	Travel length			Hole length mm			Slide weight kg/pair
					C	D	E	
TS–3511–12	304.8	225.0	200.0	174.0	–	152.4	254.0	0.56
TS–3511–14	355.6	276.0	251.0	225.0	–	203.2	304.8	0.63
TS–3511–16	406.4	327.0	301.0	276.0	–	254.0	355.6	0.72
TS–3511–18	457.2	378.0	352.0	327.0	203.2	304.8	406.4	0.80
TS–3511–20	508.0	428.0	403.0	378.0	228.6	355.6	457.2	0.84
TS–3511–22	558.8	479.0	454.0	428.0	254.0	406.4	508.0	0.90
TS–3511–24	609.6	530.0	505.0	479.0	279.4	457.2	558.8	1.00
TS–3511–26	660.4	581.0	555.0	530.0	304.8	508.0	609.6	1.10
TS–3511–28	711.2	632.0	606.0	581.0	330.2	558.8	660.4	1.13

Note:

When ordering please specify length of carriage after Part No. i.e. TS–3511–12–Y. We stock Y length as standard.

www.bergab.ru Берг АБ prom@bergab.ru Тел.(495)-228-06-21,факс (495) 223-3071

TS–3520 BOTH SIDE TRAVEL SLIDE

Model TS–3520

- Both side travel
- Load rating (per pair)
  25–49kg (see table)
- #8(M4) pan head screw
- Non-disconnect

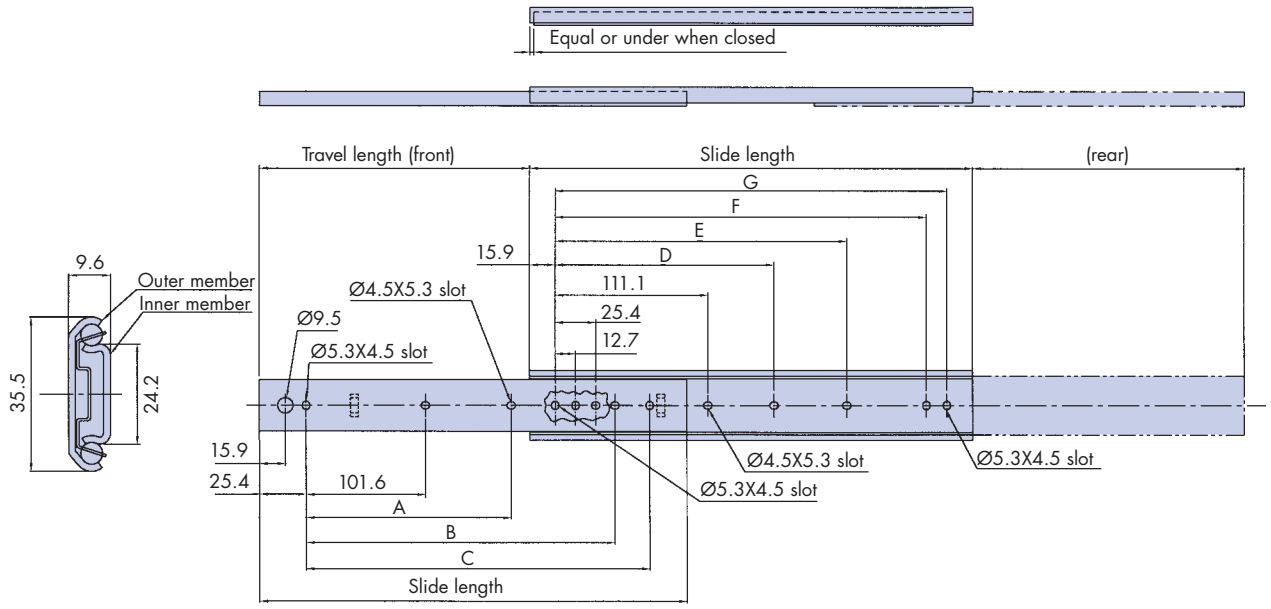

Part number	Slide length	Travel length	Hole length mm							Load Rating kg/pair	Slide weight kg/pair
			A	B	C	D	E	F	G		
TS–3520–12	304.8	224.0	–	152.4	254.0	–	149.2	260.3	273.0	49	0.60
TS–3520–14	355.6	275.0	–	203.2	304.8	–	200.0	311.1	323.8	47	0.70
TS–3520–16	406.4	300.0	–	254.0	355.6	–	250.8	361.9	374.6	43	0.80
TS–3520–18	457.2	325.0	203.2	304.8	406.4	212.7	301.6	412.7	425.4	41	0.90
TS–3520–20	508.0	376.0	228.6	355.6	457.2	238.1	352.4	463.5	476.2	37	1.00
TS–3520–22	558.8	402.0	254.0	406.4	508.0	263.5	403.2	514.3	527.0	34	1.10
TS–3520–24	609.6	427.0	279.4	457.2	558.8	228.9	454.0	565.1	577.8	30	1.20
TS–3520–26	660.4	478.0	304.8	508.0	609.6	314.3	504.8	615.9	628.6	27	1.25
TS–3520–28	711.2	503.0	330.2	558.8	660.4	339.7	555.6	666.7	679.4	25	1.34

www.bergab.ru Берг АБ prom@bergab.ru Тел.(495)-228-06-21,факс (495) 223-3071

TS–3521 3/4 TRAVEL SLIDE

Model TS–3521

STOCK SERIES

- 3/4 travel
- Load rating (per pair) 25–49kg (see table)
- #8(M4) pan head screw
- Non-disconnect

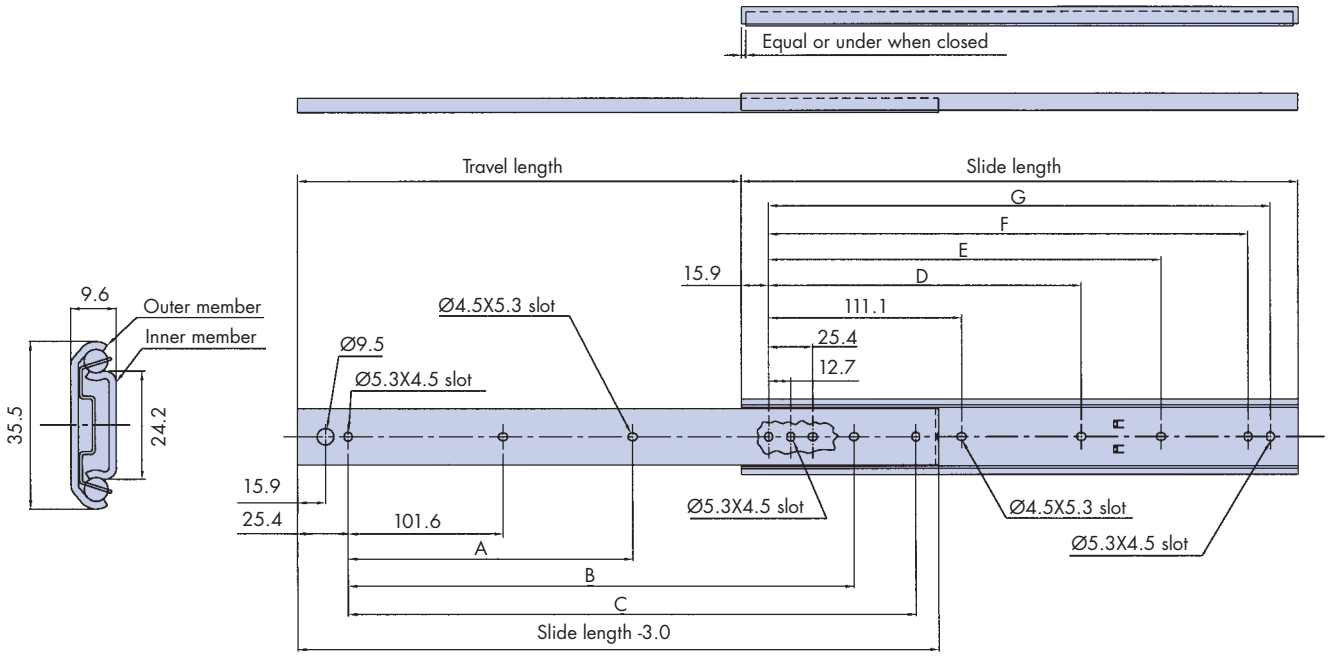

Part number	Slide length	Travel length	Hole length mm							Load Rating kg/pair	Slide weight kg/pair
			A	B	C	D	E	F	G		
TS–3521–12	304.8	226.0	–	152.4	254.0	–	149.2	260.3	273.0	49	0.60
TS–3521–14	355.6	277.0	–	203.2	304.8	–	200.0	311.1	323.8	47	0.70
TS–3521–16	406.4	302.0	–	254.0	355.6	–	250.8	361.9	374.6	43	0.80
TS–3521–18	457.2	328.0	203.2	304.8	406.4	212.7	301.6	412.7	425.4	41	0.90
TS–3521–20	508.0	379.0	228.6	355.6	457.2	238.1	352.4	463.5	476.2	37	1.00
TS–3521–22	558.8	404.0	254.0	406.4	508.0	263.5	403.2	514.3	527.0	34	1.10
TS–3521–24	609.6	430.0	279.4	457.2	558.8	228.9	454.0	565.1	577.8	30	1.20
TS–3521–26	660.4	480.0	304.8	508.0	609.6	314.3	504.8	615.9	628.6	27	1.25
TS–3521–28	711.2	506.0	330.2	558.8	660.4	339.7	555.6	666.7	679.4	25	1.34

TS–3525 LEVER DISCONNECT LOCK OUT 3/4 TRAVEL SLIDE

Model TS–3525

- 3/4 travel
- Load rating (per pair) 25–45kg (see table)
- #8(M4) pan head screw
- Lever-disconnect / Lock-out

Model TS–3524

- 3524 version has no lock out

STOCK SERIES

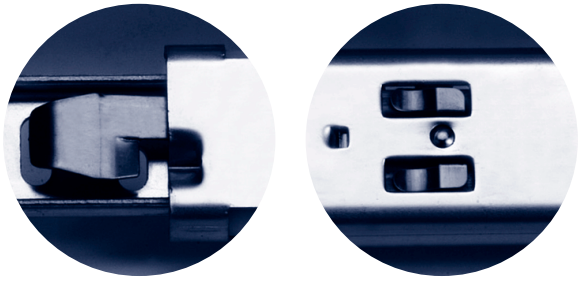

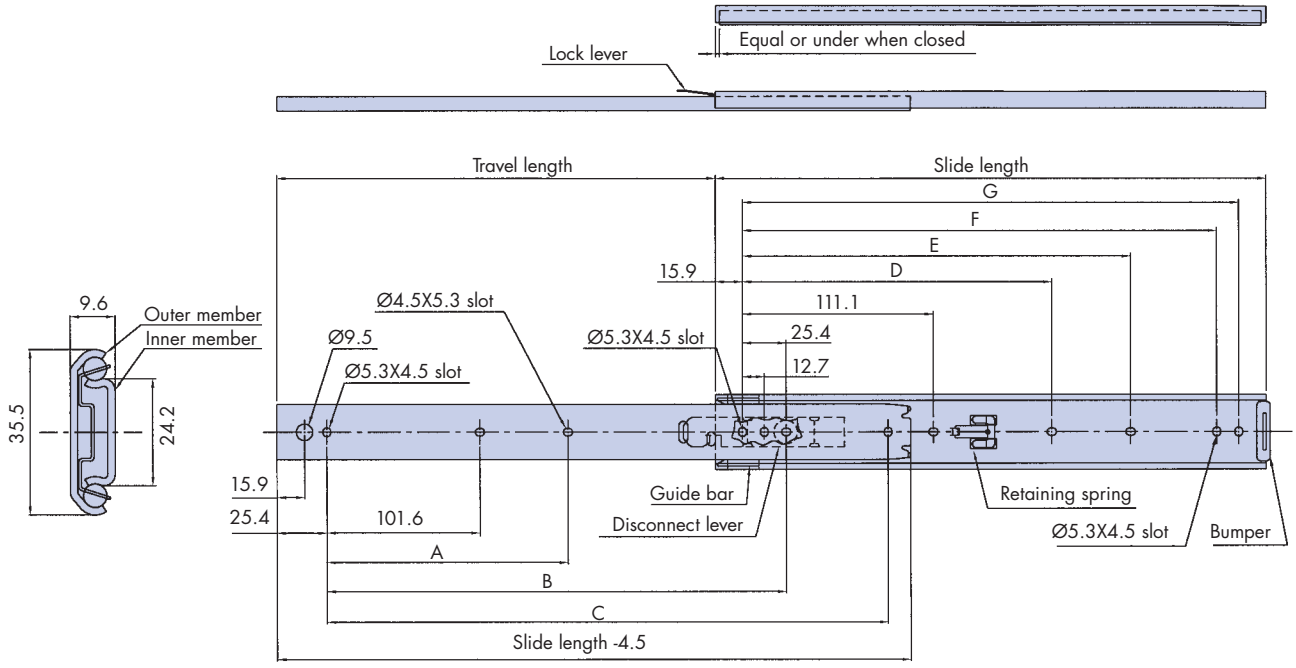

Part number	Slide length	Travel length	Hole length mm							Load Rating kg/pair	Slide weight kg/pair
			A	B	C	D	E	F	G		
TS–3525–12 TS–3524–12	304.8	203.0	–	215.9	254.0	–	149.2	260.3	273.0	45	0.61
TS–3525–14 TS–3524–14	355.6	254.4	–	266.7	304.8	–	200.0	311.1	323.8	43	0.72
TS–3525–16 TS–3524–16	406.4	305.2	–	317.5	355.6	–	250.8	361.9	374.6	41	0.81
TS–3525–18 TS–3524–18	457.2	330.6	203.2	342.9	406.4	212.7	301.6	412.7	425.4	39	0.91
TS–3525–20 TS–3524–20	508.0	381.4	228.6	393.7	457.2	238.1	352.4	463.5	476.2	37	1.00
TS–3525–22 TS–3524–22	558.8	406.4	254.0	418.7	508.0	263.5	403.2	514.3	527.0	33	1.23
TS–3525–24 TS–3524–24	609.6	432.2	279.4	444.5	558.8	228.9	454.0	565.1	577.8	30	1.32
TS–3525–26 TS–3524–26	660.4	483.0	304.8	495.3	609.6	314.3	504.8	615.9	628.6	27	1.41
TS–3525–28 TS–3524–28	711.2	508.0	330.2	520.3	660.4	339.7	555.6	666.7	679.4	25	1.51

TS–3535 LEVER DISCONNECT LOCK OUT OVER TRAVEL SLIDE

Model TS–3535

STOCK SERIES

- Over travel
- Load rating (per pair) 41–54kg (see table)
- #8(M4) pan head screw
- Lever-disconnect / Lock-out

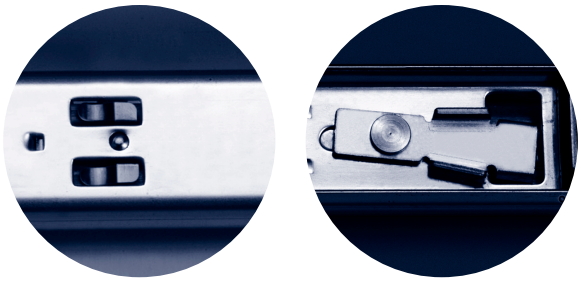

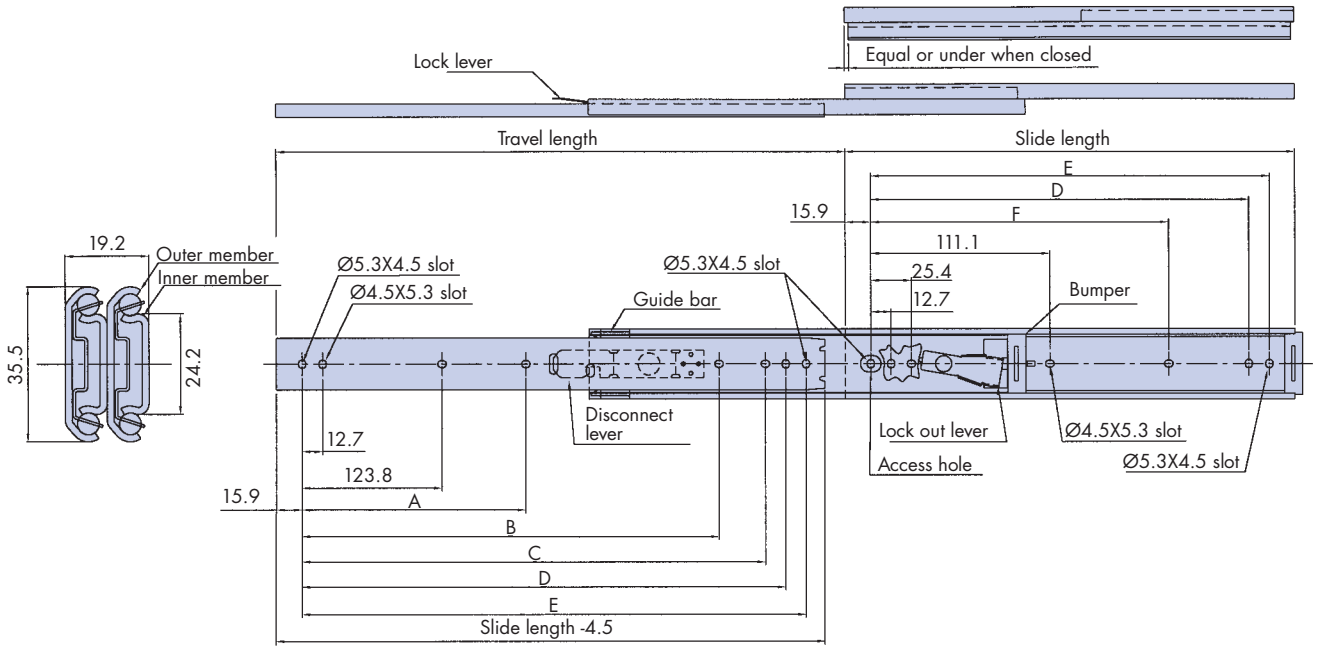

Part number	Slide length	Travel length	Hole length mm						Load Rating kg/pair	Slide weight kg/pair
			A	B	C	D	E	F		
TS–3535–12	304.8	327.0	–	–	–	260.3	273.0	–	54	0.61
TS–3535–14	355.6	378.0	–	–	298.4	311.1	323.8	–	53	0.72
TS–3535–16	406.4	429.0	–	–	349.2	361.9	374.6	250.8	51	0.81
TS–3535–18	457.2	480.0	212.7	–	400.0	412.7	425.4	301.6	50	0.91
TS–3535–20	508.0	530.0	238.1	365.1	450.8	463.5	476.2	352.4	48	1.00
TS–3535–22	558.8	581.0	263.5	415.9	501.6	514.3	527.0	403.2	47	1.23
TS–3535–24	609.6	632.0	228.9	466.7	552.4	565.1	577.8	454.0	45	1.32
TS–3535–26	660.4	683.0	314.3	517.5	603.2	615.9	628.6	504.8	43	1.41
TS–3535–28	711.2	734.0	339.7	568.3	654.0	666.7	679.4	555.6	41	1.51

www.bergab.ru Берг АБ prom@bergab.ru Тел.(495)-228-06-21,факс (495) 223-3071

TS–3531 OVER TRAVEL SLIDE

Model TS–3531

STOCK SERIES

- Over travel
- Load rating (per pair) 45–60kg (see table)
- #8(M4) pan head screw
- Non-disconnect

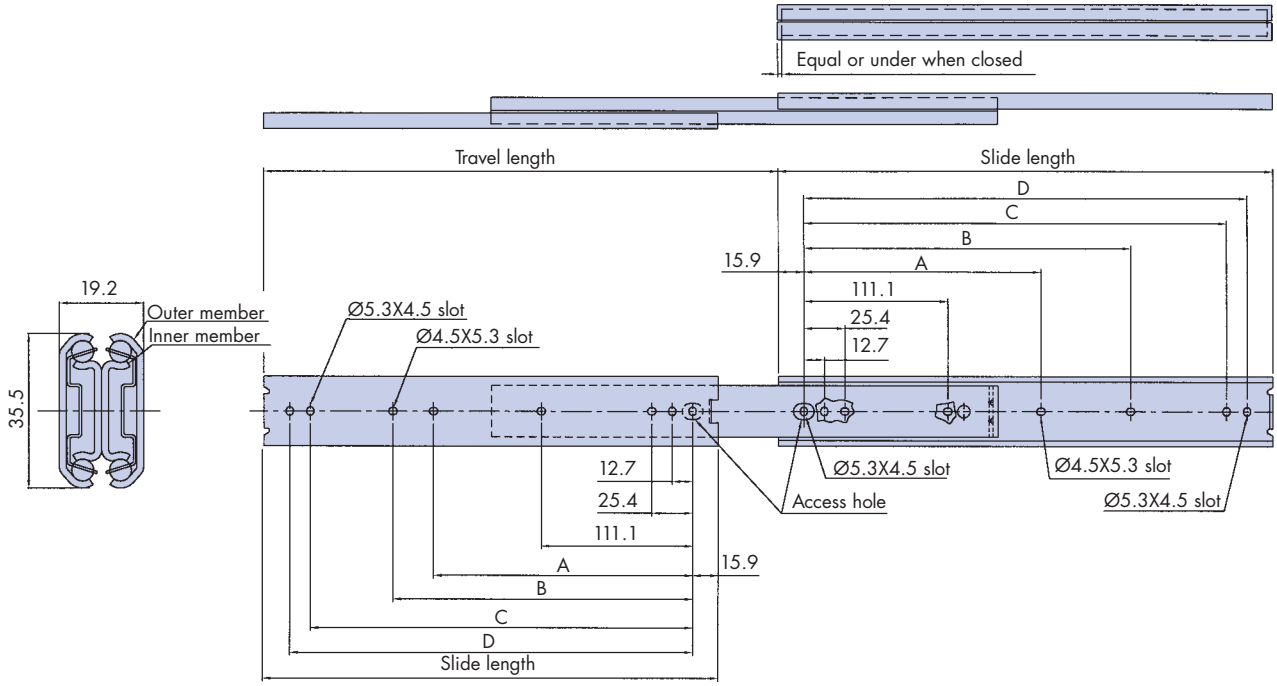

Part number	Slide length	Travel length	Hole length mm				Load Rating kg/pair	Slide weight kg/pair
			A	B	C	D		
TS–3531–12	304.8	326.0	–	149.2	260.3	273.0	60	1.31
TS–3531–14	355.6	377.0	–	200.0	311.1	323.8	59	1.62
TS–3531–16	406.4	428.0	–	250.8	361.9	374.6	57	1.81
TS–3531–18	457.2	479.0	212.7	301.6	412.7	425.4	56	2.00
TS–3531–20	508.0	529.0	238.1	352.4	463.5	476.2	53	2.33
TS–3531–22	558.8	580.0	263.5	403.2	514.3	527.0	51	2.53
TS–3531–24	609.6	631.0	288.9	454.0	565.1	577.8	49	2.72
TS–3531–26	660.4	682.0	314.3	504.8	615.9	628.6	47	2.92
TS–3531–28	711.2	732.0	339.7	555.6	666.7	679.4	45	3.10

TS–3561 OVER TRAVEL FOR HEAVY DUTY APPLICATIONS

Model TS–3561

STOCK SERIES

- Over travel
- Load rating (per pair) 190–280kg (see table)
- #8(M4) pan head screw
- Non-disconnect

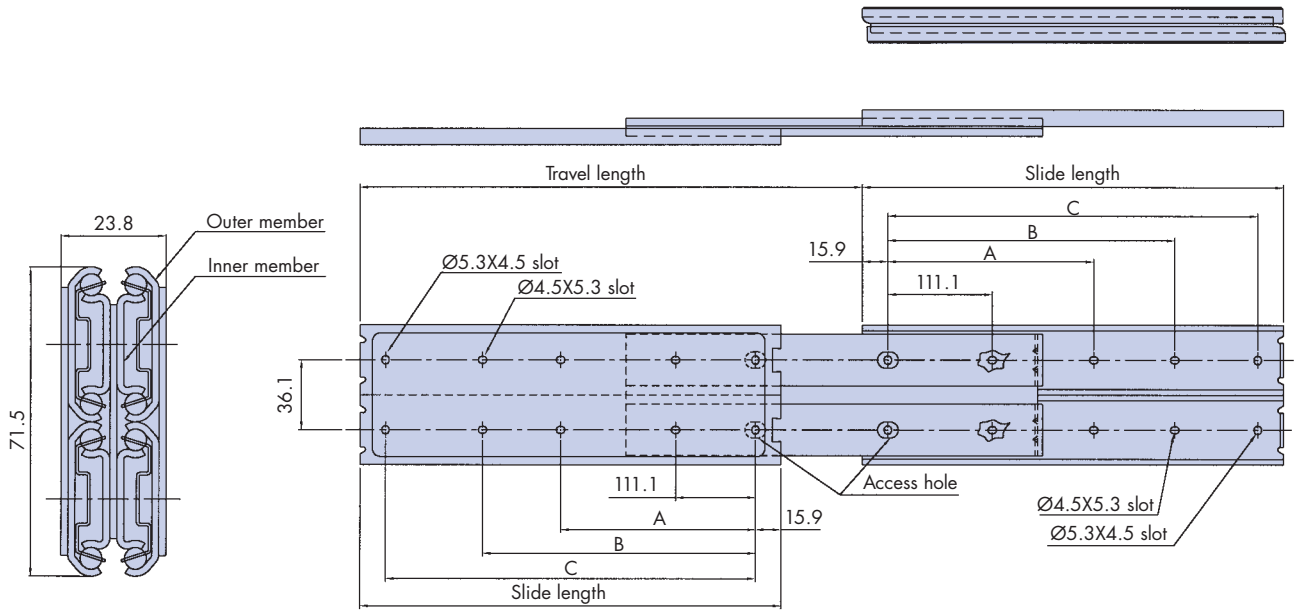

Part number	Slide length	Travel length	Hole length mm			Load Rating kg/pair	Slide weight kg/pair
			A	B	C		
TS–3561–12	304.8	326.0	–	149.2	273.0	280	3.91
TS–3561–14	355.6	377.0	–	200.0	323.8	275	4.62
TS–3561–16	406.4	428.0	–	250.8	374.6	265	5.31
TS–3561–18	457.2	479.0	212.7	301.6	425.4	256	5.90
TS–3561–20	508.0	529.0	238.1	352.4	476.2	246	6.61
TS–3561–22	558.8	580.0	263.5	403.2	527.0	235	7.42
TS–3561–24	609.6	631.0	288.9	454.0	577.8	222	7.90
TS–3561–26	660.4	682.0	314.3	504.8	628.6	205	8.60
TS–3561–28	711.2	732.0	339.7	555.6	679.4	190	9.20

TS–350 OVER TRAVEL COMPACT SLIDE

Model TS–350

- Over travel
- Load rating (per pair)
  23–33kg (see table)
- #8(M4) pan head screw
- Non- disconnect

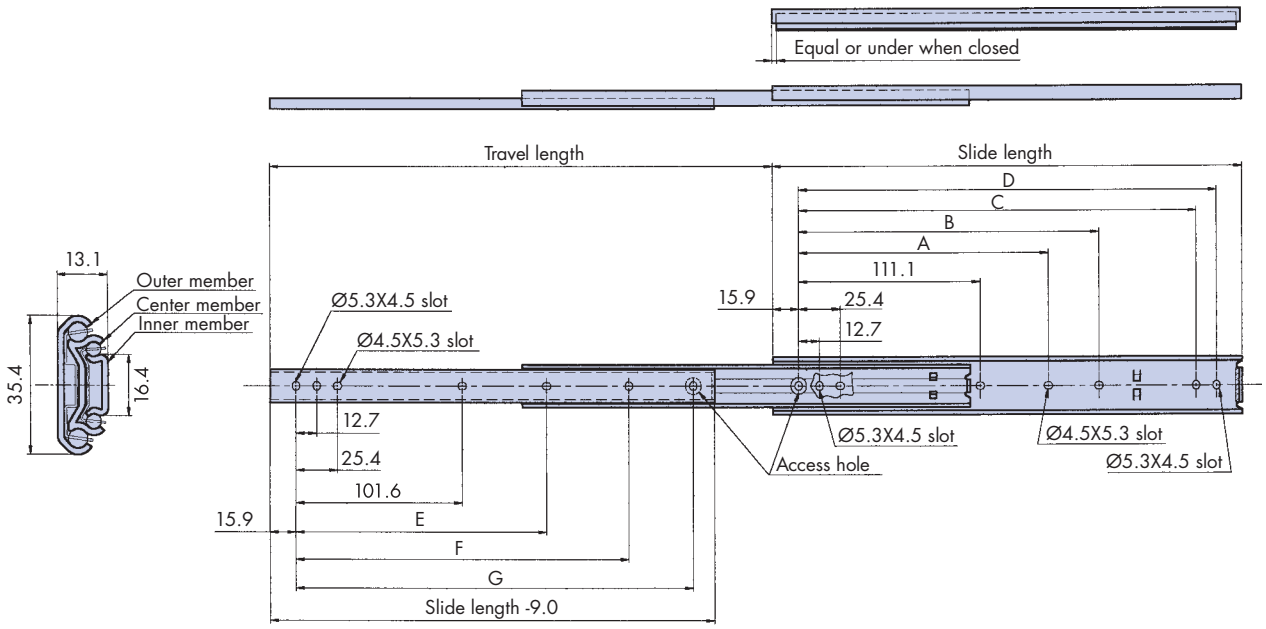

Part number	Slide length	Travel length	Hole length mm							Load Rating kg/pair	Slide weight kg/pair
			A	B	C	D	E	F	G		
TS–350–8	203.2	214.0	–	–	158.7	171.4	–	50.8	152.4	33	0.50
TS–350–10	254.0	265.0	–	–	209.5	222.2	–	101.6	203.2	32	0.64
TS–350–12	304.8	316.0	–	149.2	260.3	273.0	–	152.4	254.0	30	0.73
TS–350–14	355.6	366.0	–	200.0	311.1	323.8	–	203.2	304.8	29	0.85
TS–350–16	406.4	417.0	–	250.8	361.9	374.6	–	254.0	355.6	28	0.98
TS–350–18	457.2	468.0	212.7	301.6	412.7	425.4	207.7	304.8	406.4	26	1.11
TS–350–20	508.0	519.0	238.1	352.4	463.5	476.2	233.1	355.6	457.2	25	1.23
TS–350–22	558.8	570.0	263.5	403.2	514.3	527.0	258.5	406.4	508.0	24	1.35
TS–350–24	609.6	620.0	288.9	454.0	565.1	577.8	283.9	457.2	558.8	23	1.46

TS–352 LEVER DISCONNECT OVER TRAVEL SLIDE

Model TS–352

- Over travel
- Load rating (per pair) 23–31kg (see table)
- #8(M4) pan head screw
- Lever disconnect

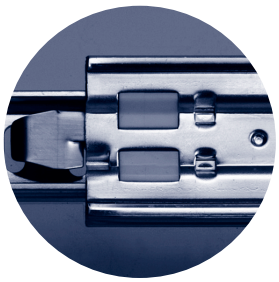

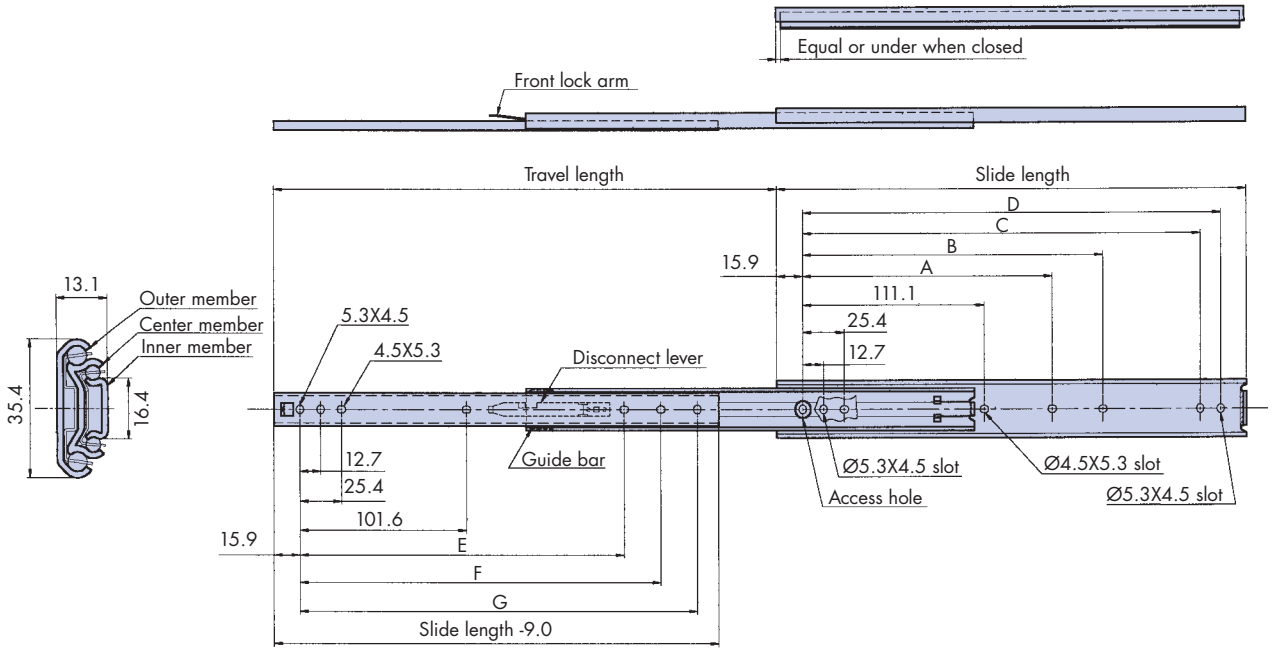

Part number	Slide length	Travel length	Hole length mm							Load Rating kg/pair	Slide weight kg/pair
			A	B	C	D	E	F	G		
TS–352–8	203.2	214.0	–	–	158.7	171.4	–	–	152.4	31	0.50
TS–352–10	254.0	265.0	–	–	209.5	222.2	–	–	203.2	30	0.64
TS–352–12	304.8	316.0	–	149.2	260.3	273.0	–	–	254.0	29	0.73
TS–352–14	355.6	366.0	–	200.0	311.1	323.8	–	–	304.8	28	0.85
TS–352–16	406.4	417.0	–	250.8	361.9	374.6	–	–	355.6	27	0.98
TS–352–18	457.2	468.0	212.7	301.6	412.7	425.4	207.7	–	406.4	26	1.11
TS–352–20	508.0	519.0	238.1	352.4	463.5	476.2	233.1	355.6	457.2	25	1.23
TS–352–22	558.8	570.0	263.5	403.2	514.3	527.0	258.5	406.4	508.0	24	1.35
TS–352–24	609.6	620.0	288.9	454.0	565.1	577.8	283.9	457.2	558.8	23	1.46

TS–355 LEVER DISCONNECT LOCK OUT OVER TRAVEL SLIDE

Model TS–355

- Over travel
- Load rating (per pair) 23–31kg (see table)
- #8(M4) pan head screw
- Lever disconnect / Lock-out

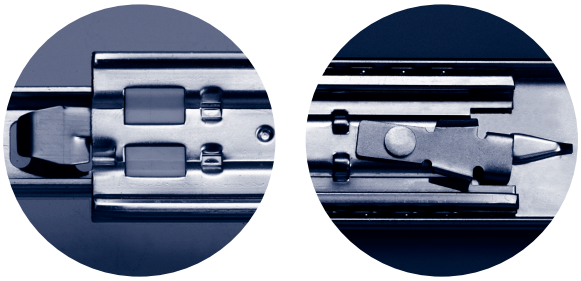

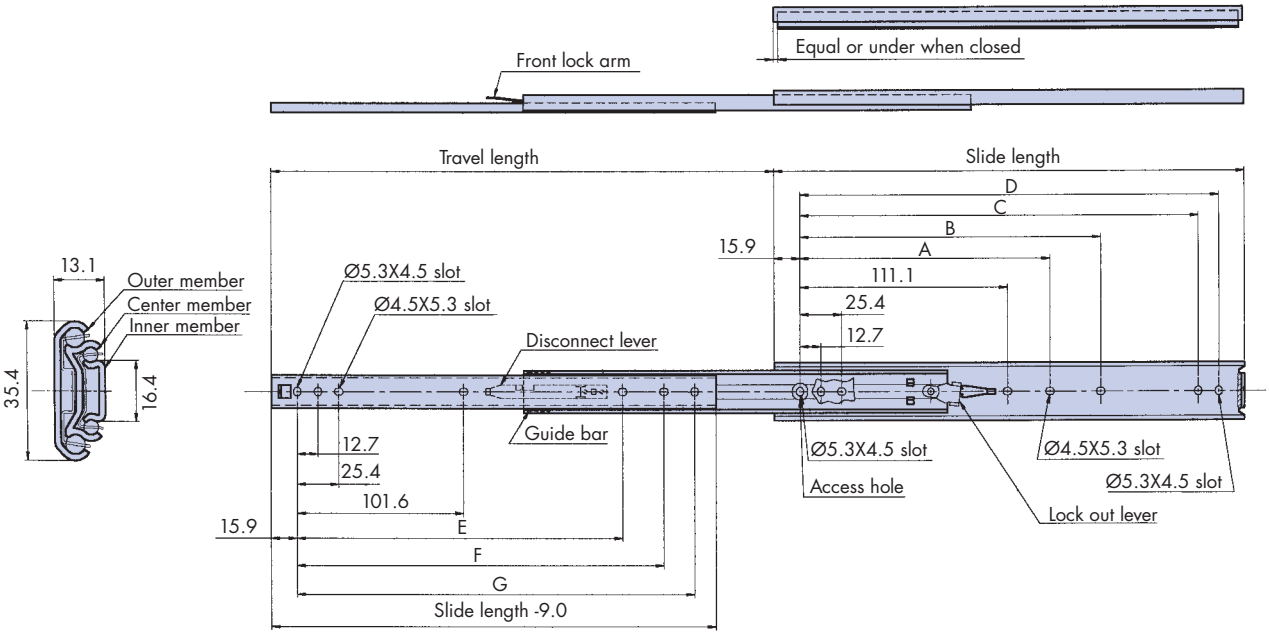

Part number	Slide length	Travel length	Hole length mm							Load Rating kg/pair	Slide weight kg/pair
			A	B	C	D	E	F	G		
TS–355–8	203.2	214.0	–	–	158.7	171.4	–	–	152.4	31	0.50
TS–355–10	254.0	265.0	–	–	209.5	222.2	–	–	203.2	30	0.64
TS–355–12	304.8	316.0	–	–	260.3	273.0	–	–	254.0	29	0.73
TS–355–14	355.6	366.0	–	200.0	311.1	323.8	–	–	304.8	28	0.85
TS–355–16	406.4	417.0	–	250.8	361.9	374.6	–	–	355.6	27	0.98
TS–355–18	457.2	468.0	212.7	301.6	412.7	425.4	207.7	–	406.4	26	1.11
TS–355–20	508.0	519.0	238.1	352.4	463.5	476.2	233.1	355.6	457.2	25	1.23
TS–355–22	558.8	570.0	263.5	403.2	514.3	527.0	258.5	406.4	508.0	24	1.35
TS–355–24	609.6	620.0	288.9	454.0	565.1	577.8	283.9	457.2	558.8	23	1.46

www.bergab.ru Берг АБ prom@bergab.ru Тел.(495)-228-06-21,факс (495) 223-3071

TS–470 OVER TRAVEL COMPACT SLIDE

Model TS–470

- Over travel
- Load rating (per pair)
  54–76kg (see table)
- #8(M4) pan head screw
- Non-disconnect

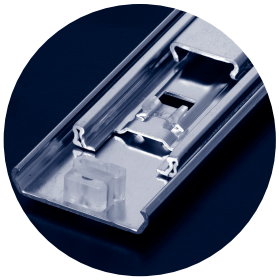

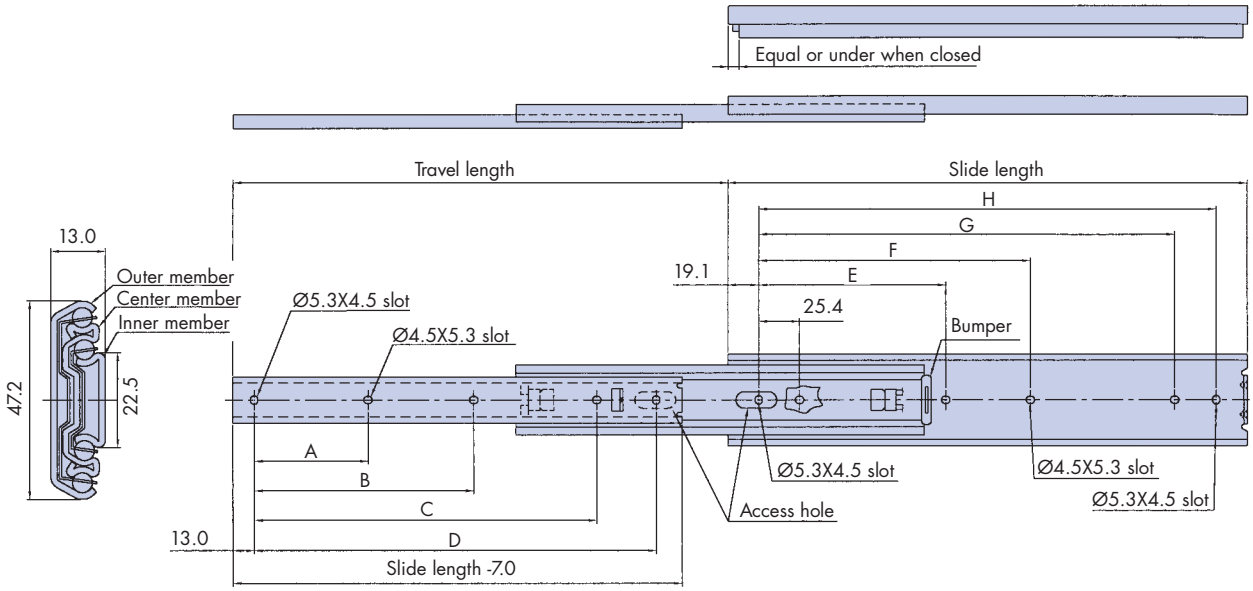

Part number	Slide length	Travel length	Hole length mm								Load Rating kg/pair	Slide weight kg/pair
			A	B	C	D	E	F	G	H		
TS–470–12	304.8	330.0	76.2	177.8	228.6	254.0	88.9	177.8	241.3	266.7	76	1.15
TS–470–14	355.6	381.0	101.6	215.9	279.4	304.8	101.6	215.9	292.1	317.5	74	1.37
TS–470–16	406.4	432.0	114.3	241.3	330.2	355.6	127.0	241.3	342.9	368.3	70	1.55
TS–470–18	457.2	483.0	139.7	279.4	381.0	406.4	139.7	279.4	393.7	419.1	66	1.77
TS–470–20	508.0	533.0	152.4	317.5	431.8	457.2	152.4	317.5	444.5	469.9	63	1.95
TS–470–22	558.8	584.0	177.8	355.6	482.6	508.0	177.8	342.9	495.3	520.7	61	2.15
TS–470–24	609.6	635.0	190.5	381.0	533.4	558.8	190.5	381.0	546.1	571.5	58	2.35
TS–470–26	660.4	686.0	203.2	419.1	584.2	609.6	203.2	419.1	596.9	622.3	56	2.60
TS–470–28	711.2	737.0	228.6	457.2	635.0	660.4	228.6	444.5	647.1	673.1	54	2.75

TS–472 LEVER DISCONNECT OVER TRAVEL SLIDE

Model TS–472

STOCK SERIES

- Over travel
- Load rating (per pair) 52–74kg (see table)
- #8(M4) pan head screw
- Lever disconnect

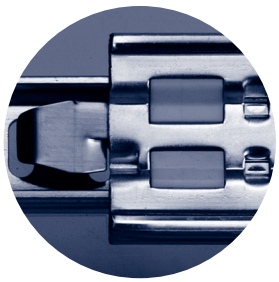

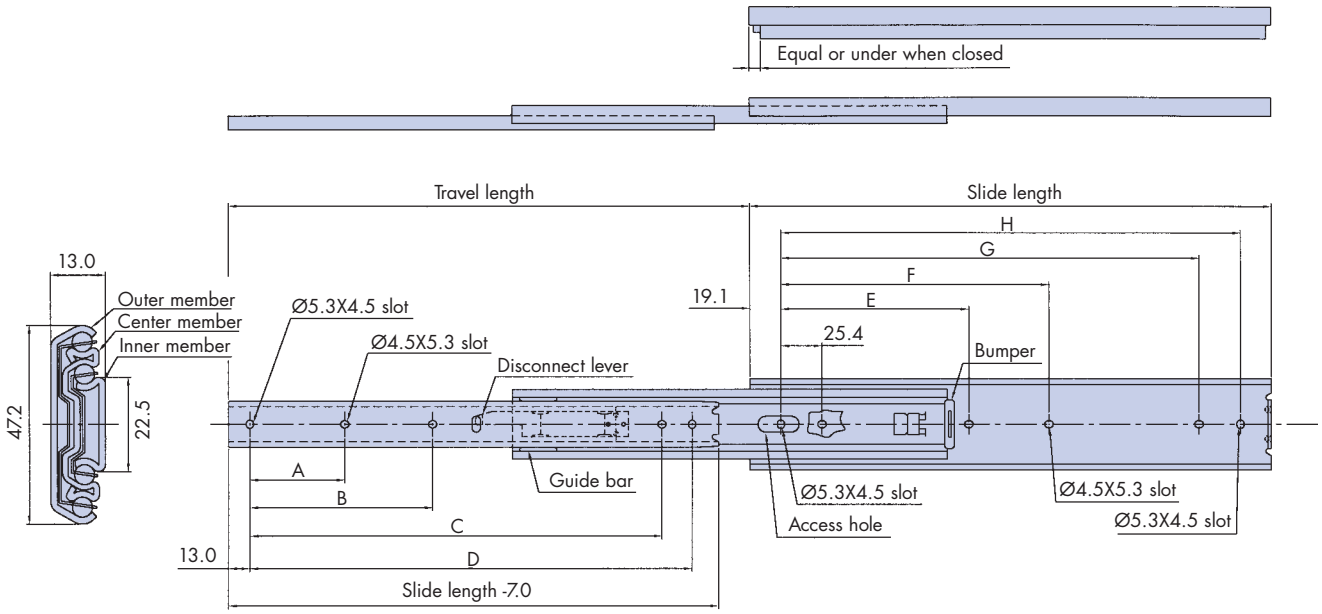

Part number	Slide length	Travel length	Hole length mm								Load Rating kg/pair	Slide weight kg/pair
			A	B	C	D	E	F	G	H		
TS–472–12	304.8	330.0	76.2	–	228.6	254.0	88.9	177.8	241.3	266.7	74	1.20
TS–472–14	355.6	381.0	101.6	–	279.4	304.8	101.6	215.9	292.1	317.5	72	1.42
TS–472–16	406.4	432.0	114.3	–	330.2	355.6	127.0	241.3	342.9	368.3	68	1.60
TS–472–18	457.2	483.0	139.7	–	381.0	406.4	139.7	279.4	393.7	419.1	64	1.82
TS–472–20	508.0	533.0	152.4	–	431.8	457.2	152.4	317.5	444.5	469.9	62	2.00
TS–472–22	558.8	584.0	177.8	–	482.6	508.0	177.8	342.9	495.3	520.7	59	2.20
TS–472–24	609.6	635.0	190.5	–	533.4	558.8	190.5	381.0	546.1	571.5	57	2.40
TS–472–26	660.4	686.0	203.2	419.1	584.2	609.6	203.2	419.1	596.9	622.3	55	2.65
TS–472–28	711.2	737.0	228.6	457.2	635.0	660.4	228.6	444.5	647.1	673.1	52	2.80

TS–475 LEVER DISCONNECT LOCK OUT OVER TRAVEL SLIDE

Model TS–475

STOCK SERIES

- Over travel
- Load rating (per pair) 52–74kg (see table)
- #8(M4) pan head screw
- Lever disconnect / Lock-out

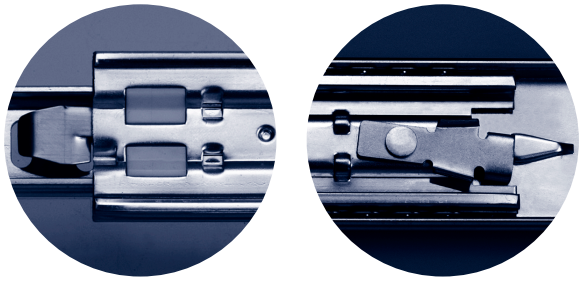

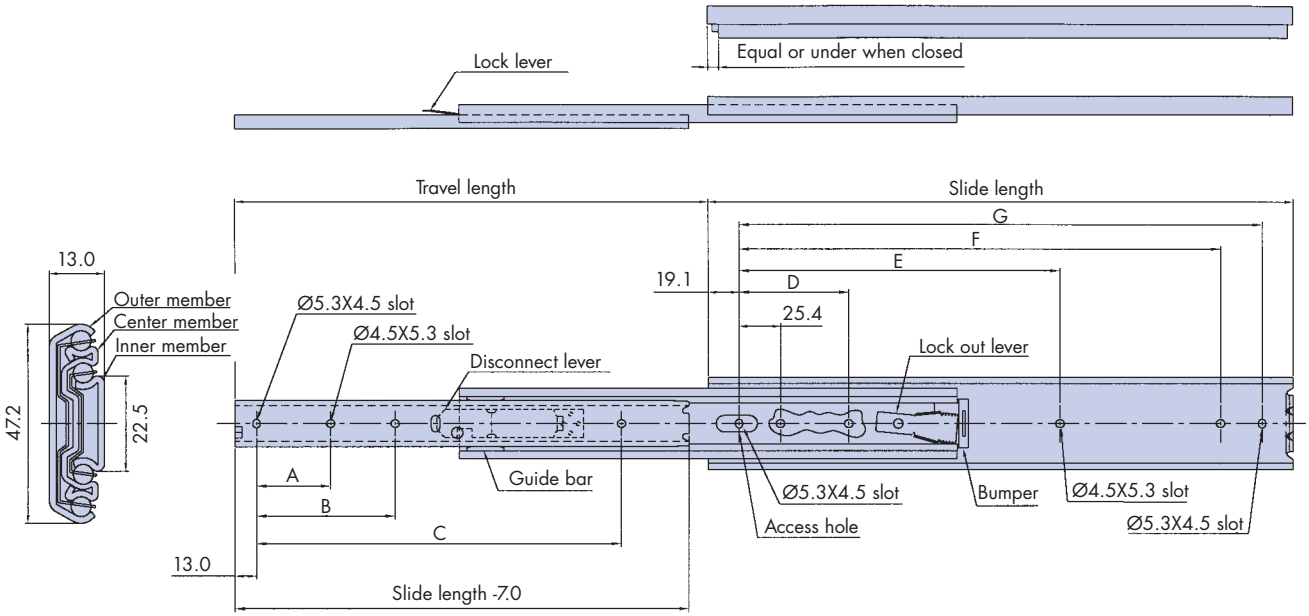

Part number	Slide length	Travel length	Hole length mm							Load Rating kg/pair	Slide weight kg/pair
			A	B	C	D	E	F	G		
TS–475–12	304.8	330.0	76.2	–	228.6	88.9	177.8	241.3	266.7	74	1.20
TS–475–14	355.6	381.0	101.6	–	279.4	101.6	215.9	292.1	317.5	72	1.42
TS–475–16	406.4	432.0	114.3	–	330.2	127.0	241.3	342.9	368.3	68	1.60
TS–475–18	457.2	483.0	139.7	–	381.0	139.7	279.4	393.7	419.1	64	1.82
TS–475–20	508.0	533.0	152.4	–	431.8	152.4	317.5	444.5	469.9	62	2.00
TS–475–22	558.8	584.0	177.8	–	482.6	177.8	342.9	495.3	520.7	59	2.20
TS–475–24	609.6	635.0	190.5	–	533.4	190.5	381.0	546.1	571.5	57	2.40
TS–475–26	660.4	686.0	203.2	419.1	584.2	203.2	419.1	596.9	622.3	55	2.65
TS–475–28	711.2	737.0	228.6	457.2	635.0	228.6	444.5	647.7	673.1	52	2.80

TS–550 OVER TRAVEL HEAVY DUTY SLIDE

Model TS–550

- Over travel
- Load rating (per pair)
  74–94kg (see table)
- #8(M4) pan head screw
- Non-disconnect

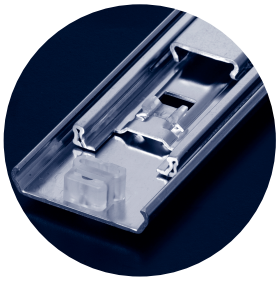

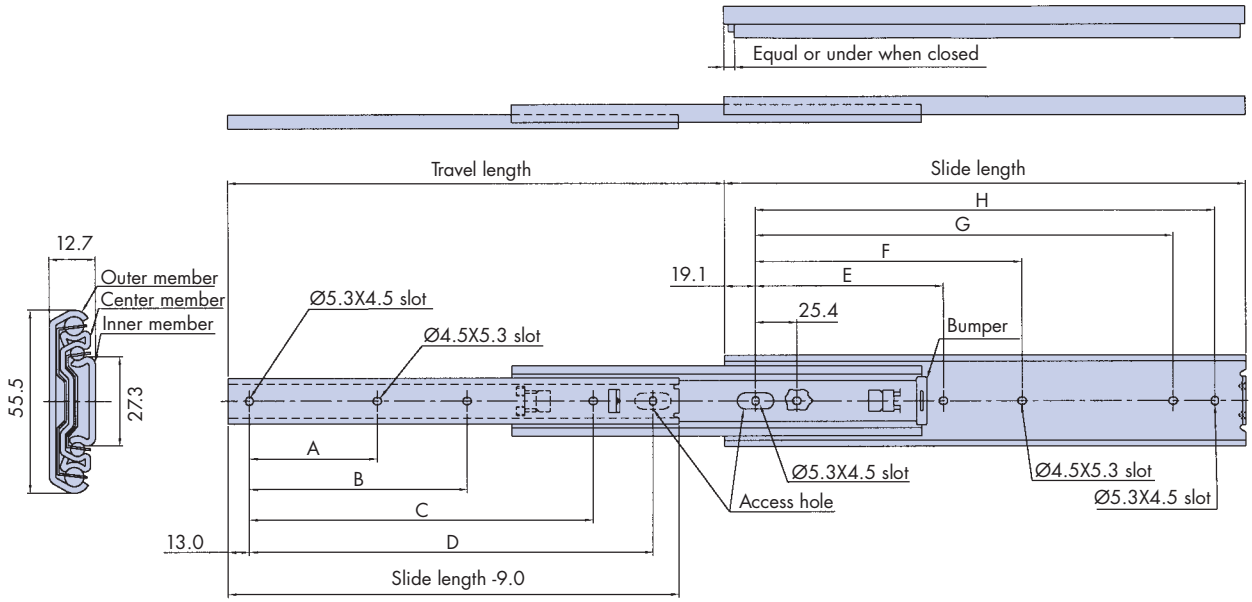

Part number	Slide length	Travel length	Hole length mm								Load Rating kg/pair	Slide weight kg/pair
			A	B	C	D	E	F	G	H		
TS–550–12	304.8	330.0	76.2	177.8	228.6	254.0	88.9	177.8	241.3	266.7	94	1.30
TS–550–14	355.6	381.0	101.6	215.9	279.4	304.8	101.6	215.9	292.1	317.5	92	1.51
TS–550–16	406.4	432.0	114.3	241.3	330.2	355.6	127.0	241.3	342.9	368.3	89	1.70
TS–550–18	457.2	483.0	139.7	279.4	381.0	406.4	139.7	279.4	393.7	419.1	86	1.92
TS–550–20	508.0	533.0	152.4	317.5	431.8	457.2	152.4	317.5	444.5	469.9	84	2.10
TS–550–22	558.8	584.0	177.8	355.6	482.6	508.0	177.8	342.9	495.3	520.7	81	2.30
TS–550–24	609.6	635.0	190.5	381.0	533.4	558.8	190.5	381.0	546.1	571.5	79	2.40
TS–550–26	660.4	686.0	203.2	419.1	584.2	609.6	203.2	419.1	596.9	622.3	76	2.75
TS–550–28	711.2	737.0	228.6	457.2	635.0	660.4	228.6	444.5	647.7	673.1	74	2.92

TS–552 LEVER DISCONNECT OVER TRAVEL HEAVY DUTY SLIDE

Model TS–552

- Over travel
- Load rating (per pair) 72–90kg (see table)
- #8(M4) pan head screw
- Lever disconnect

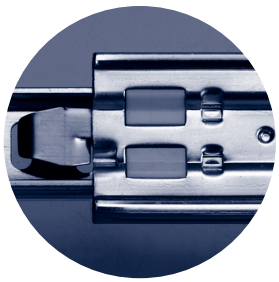

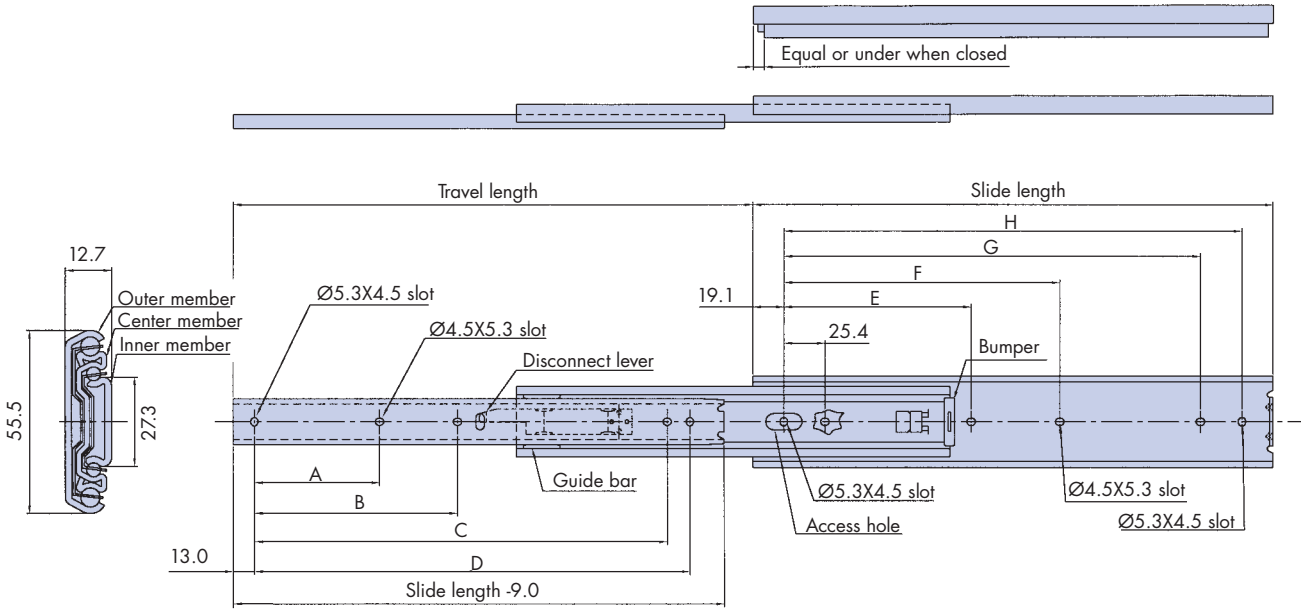

Part number	Slide length	Travel length	Hole length mm								Load Rating kg/pair	Slide weight kg/pair
			A	B	C	D	E	F	G	H		
TS–552–12	304.8	330.0	76.2	–	228.6	254.0	88.9	177.8	241.3	266.7	90	1.32
TS–552–14	355.6	381.0	101.6	–	279.4	304.8	101.6	215.9	292.1	317.5	88	1.53
TS–552–16	406.4	432.0	114.3	–	330.2	355.6	127.0	241.3	342.9	368.3	86	1.72
TS–552–18	457.2	483.0	139.7	–	381.0	406.4	139.7	279.4	393.7	419.1	84	1.94
TS–552–20	508.0	533.0	152.4	–	431.8	457.2	152.4	317.5	444.5	469.9	82	2.12
TS–552–22	558.8	584.0	177.8	–	482.6	508.0	177.8	342.9	495.3	520.7	79	2.32
TS–552–24	609.6	635.0	190.5	–	533.4	558.8	190.5	381.0	546.1	571.5	77	2.42
TS–552–26	660.4	686.0	203.2	419.1	584.2	609.6	203.2	419.1	596.9	622.3	75	2.77
TS–552–28	711.2	737.0	228.6	457.2	635.0	660.4	228.6	444.5	647.7	673.1	72	2.94

TS–555 LEVER DISCONNECT LOCK OUT OVER TRAVEL HEAVY DUTY SLIDE

Model TS–555

- Over travel
- Load rating (per pair) 72–90kg (see table)
- #8(M4) pan head screw
- Lever disconnect / Lock-out

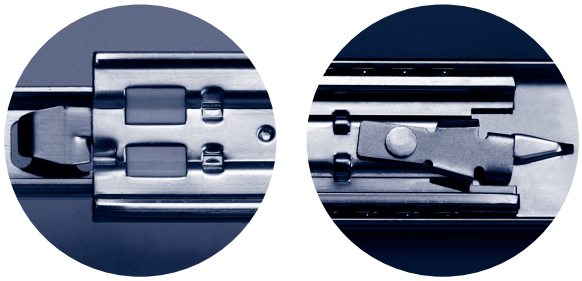

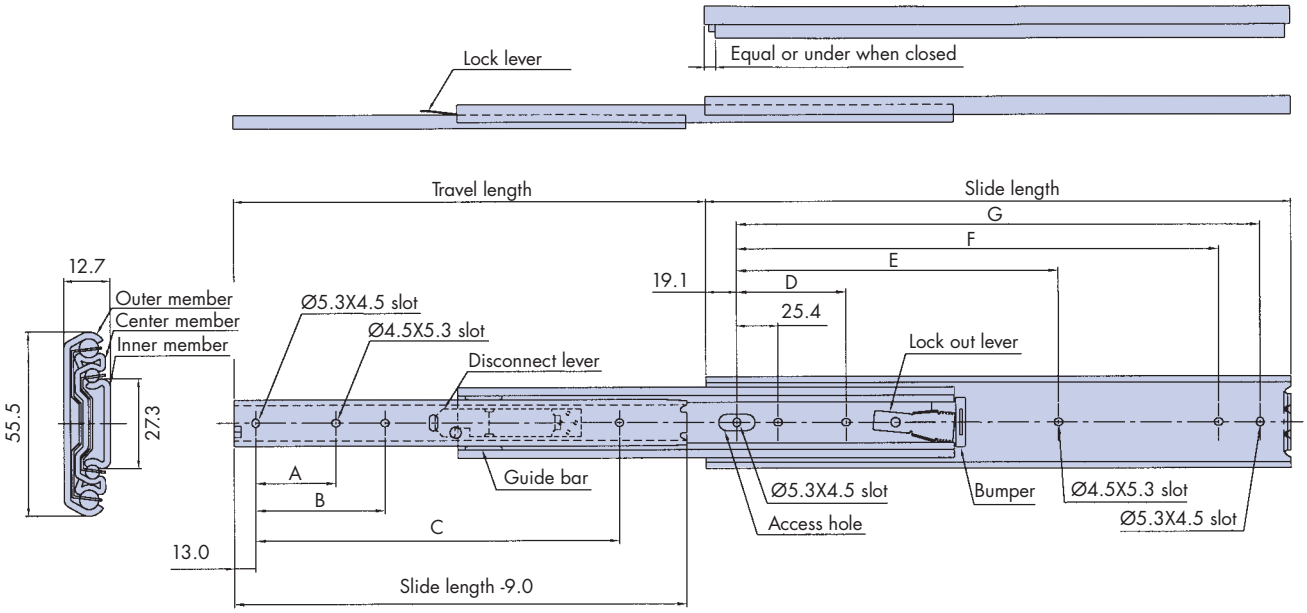

Part number	Slide length	Travel length	Hole length mm							Load Rating kg/pair	Slide weight kg/pair
			A	B	C	D	E	F	G		
TS–555–12	304.8	330.0	76.2	–	228.6	88.9	177.8	241.3	266.7	90	1.34
TS–555–14	355.6	381.0	101.6	–	279.4	101.6	215.9	292.1	317.5	88	1.55
TS–555–16	406.4	432.0	114.3	–	330.2	127.0	241.3	342.9	368.3	86	1.74
TS–555–18	457.2	483.0	139.7	–	381.0	139.	279.4	393.7	419.1	84	1.96
TS–555–20	508.0	533.0	152.4	–	431.8	152.4	317.5	444.5	469.9	82	2.14
TS–555–22	558.8	584.0	177.8	–	482.6	177.8	342.9	495.3	520.7	79	2.34
TS–555–24	609.6	635.0	190.5	–	533.4	190.5	381.0	546.1	571.5	77	2.44
TS–555–26	660.4	686.0	203.2	419.1	584.2	203.2	419.1	596.9	622.3	75	2.80
TS–555–28	711.2	737.0	288.6	457.2	635.0	228.6	444.5	647.7	673.1	72	2.96

TS–560 OVER TRAVEL HEAVY DUTY SLIDE

Model TS–560

- Over travel
- Load rating (per pair)
  90–120kg (see table)
- #8(M4) pan head screw
- Non-disconnect

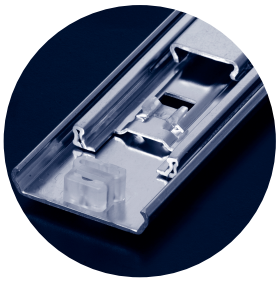

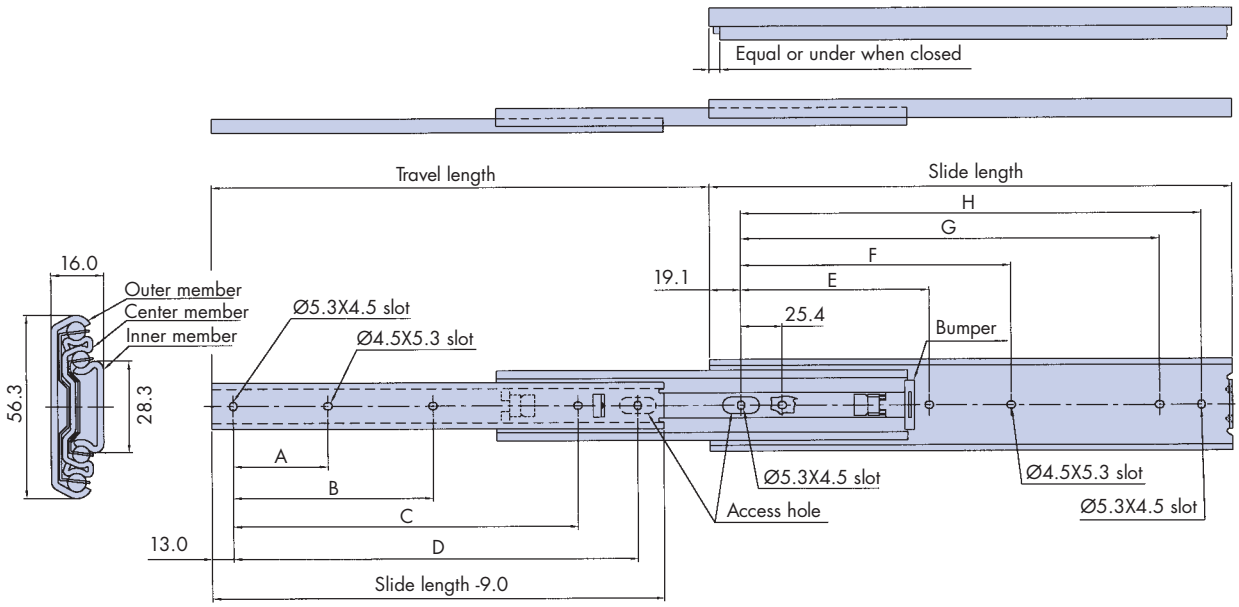

Part number	Slide length	Travel length	Hole length mm								Load Rating kg/pair	Slide weight kg/pair
			A	B	C	D	E	F	G	H		
TS–560–12	304.8	330.0	76.2	177.8	228.6	254.0	88.9	177.8	241.3	266.7	120	1.65
TS–560–14	355.6	381.0	101.6	215.9	279.4	304.8	101.6	215.9	292.1	317.5	116	1.90
TS–560–16	406.4	432.0	114.3	241.3	330.2	355.6	127.0	241.3	342.9	368.3	112	2.00
TS–560–18	457.2	483.0	139.7	279.4	381.0	406.4	139.7	279.4	393.7	419.1	109	2.26
TS–560–20	508.0	533.0	152.4	317.5	431.8	457.2	152.4	317.5	444.5	469.9	105	2.45
TS–560–22	558.8	584.0	177.8	355.6	482.6	508.0	177.8	342.9	495.3	520.7	101	2.65
TS–560–24	609.6	635.0	190.5	381.0	533.4	558.8	190.5	381.0	546.1	571.5	98	2.75
TS–560–26	660.4	686.0	203.2	419.1	584.2	609.6	203.2	419.1	596.9	622.3	94	3.14
TS–560–28	711.2	737.0	228.6	457.2	635.0	660.4	228.6	444.5	647.7	673.1	90	3.50

TS–562 LEVER DISCONNECT OVER TRAVEL HEAVY DUTY SLIDE

Model TS–562

STOCK SERIES

- Over travel
- Load rating (per pair) 87–115kg (see table)
- #8(M4) pan head screw
- Lever disconnect

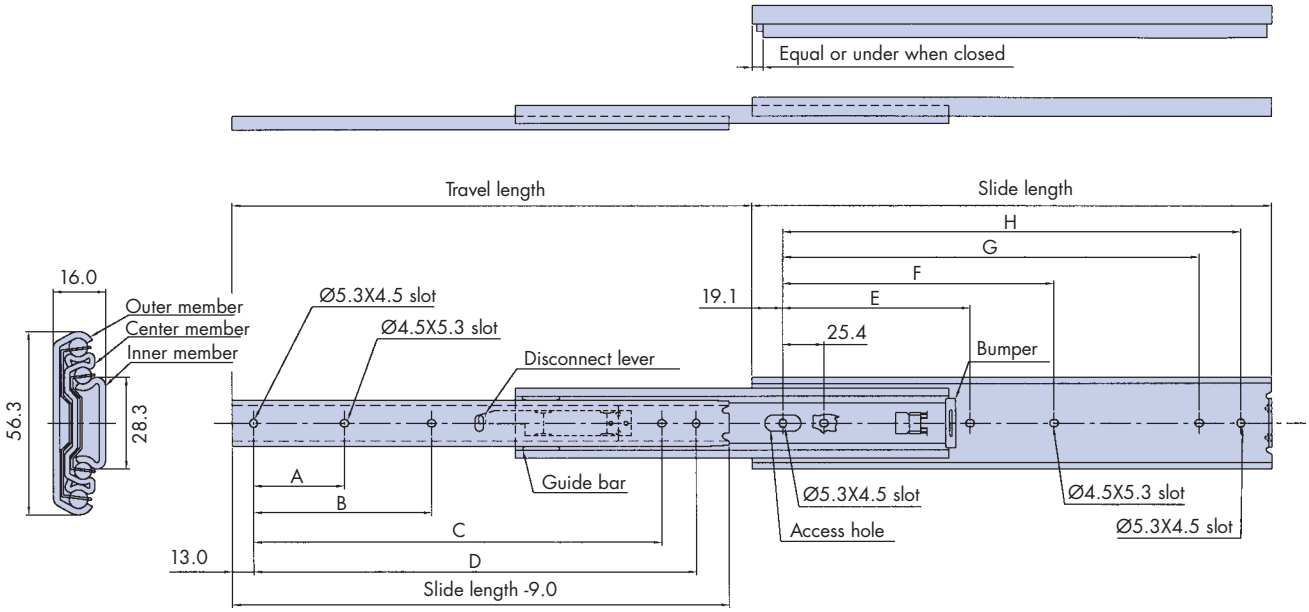

Part number	Slide length	Travel length	Hole length mm								Load Rating kg/pair	Slide weight kg/pair
			A	B	C	D	E	F	G	H		
TS–562–12	304.8	330.0	76.2	–	228.6	254.0	88.9	177.8	241.3	266.7	115	1.70
TS–562–14	355.6	381.0	101.6	–	279.4	304.8	101.6	215.9	292.1	317.5	111	1.95
TS–562–16	406.4	432.0	114.3	–	330.2	355.6	127.0	241.3	342.9	368.3	107	2.05
TS–562–18	457.2	483.0	139.7	–	381.0	406.4	139.7	279.4	393.7	419.1	104	2.31
TS–562–20	508.0	533.0	152.4	–	431.8	457.2	152.4	317.5	444.5	469.9	101	2.50
TS–562–22	558.8	584.0	177.8	–	482.6	508.0	177.8	342.9	495.3	520.7	97	2.70
TS–562–24	609.6	635.0	190.5	–	533.4	558.8	190.5	381.0	546.1	571.5	94	2.80
TS–562–26	660.4	686.0	203.2	419.1	584.2	609.6	203.2	419.1	596.9	622.3	90	3.20
TS–562–28	711.2	737.0	228.6	457.2	635.0	660.4	228.6	444.5	647.7	673.1	87	3.60

TS–565 LEVER DISCONNECT LOCK OUT OVER TRAVEL HEAVY DUTY SLIDE

Model TS–565

STOCK SERIES

- Over travel
- Load rating (per pair)
  87–115kg (see table)
- #8(M4) pan head screw
- Lever disconnect / Lock - out

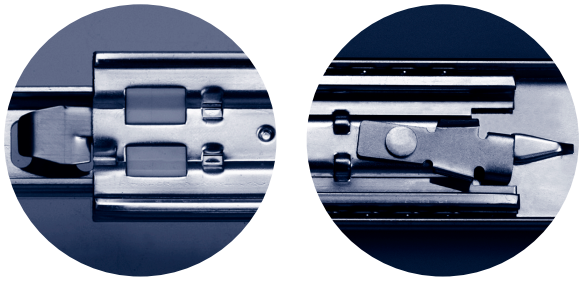

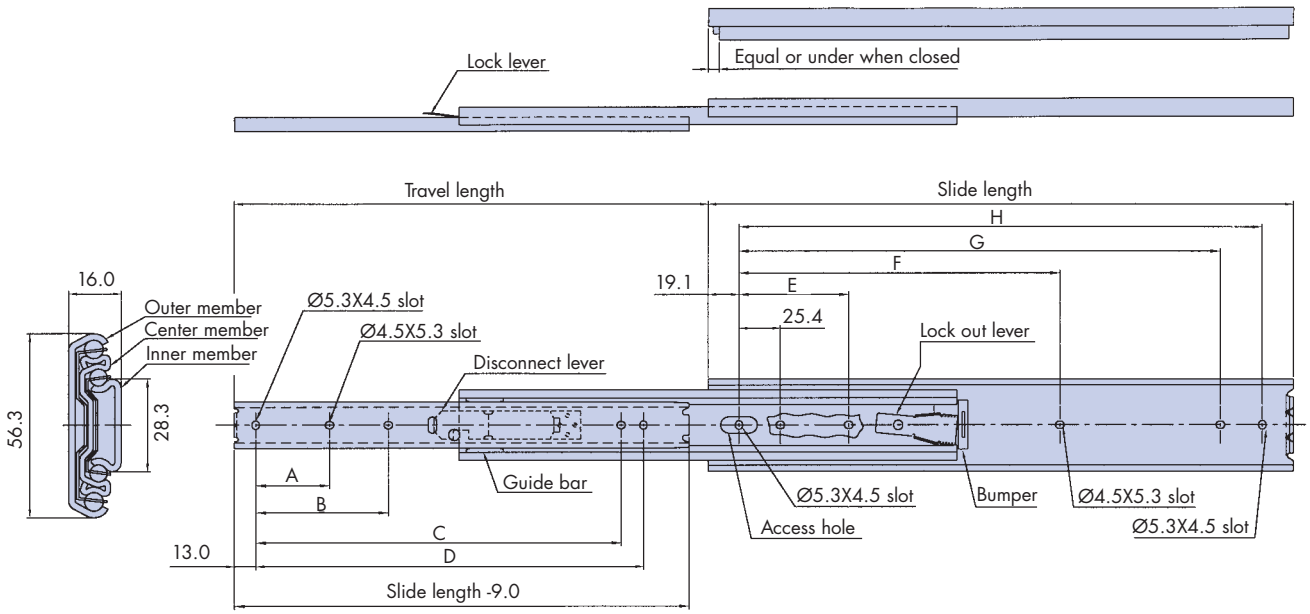

Part number	Slide length	Travel length	Hole length mm								Load Rating kg/pair	Slide weight kg/pair
			A	B	C	D	E	F	G	H		
TS–565–12	304.8	330.0	76.2	–	228.6	–	88.9	177.8	241.3	266.7	115	1.75
TS–565–14	355.6	381.0	101.6	–	279.4	304.8	101.6	215.9	292.1	317.5	111	2.00
TS–565–16	406.4	432.0	114.3	–	330.2	355.6	127.0	241.3	342.9	368.3	107	2.10
TS–565–18	457.2	483.0	139.7	–	381.0	406.4	139.7	279.4	393.7	419.1	104	2.36
TS–565–20	508.0	533.0	152.4	–	431.8	457.2	152.4	317.5	444.5	469.9	101	2.55
TS–565–22	558.8	584.0	177.8	–	482.6	508.0	177.8	342.9	495.3	520.7	97	2.75
TS–565–24	609.6	635.0	190.5	–	533.4	558.8	190.5	381.0	546.1	571.5	94	2.85
TS–565–26	660.4	686.0	203.2	419.1	584.2	609.6	203.2	419.1	596.9	622.3	90	3.25
TS–565–28	711.2	737.0	228.6	457.2	635.0	660.4	228.6	444.5	647.7	673.1	87	3.65

Notes

Notes

www.bergab.ru Берг АБ prom@bergab.ru Тел.(495)-228-06-21,факс (495) 223-3071

HepcoMotion® Product Range

GV3
Linear Guidance and Transmission System

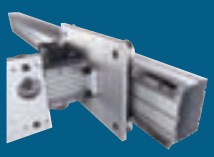

HDS2
Heavy Duty Slide System

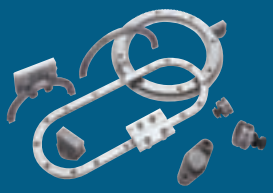

PRT
Ring Slides and Track System

HDRT
Heavy Duty Ring Slides and Track System

SL2
Stainless Steel Based Slide System

LBG
Linear Ball Guides

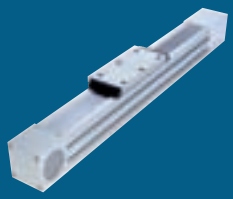

SBD
Sealed Belt Drive

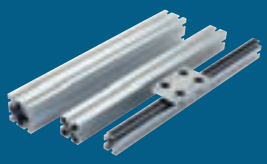

MCS
Aluminium Frame and Machine Construction System

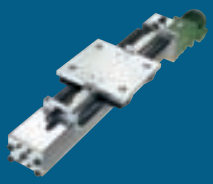

HDLS
Heavy Duty Driven Linear System

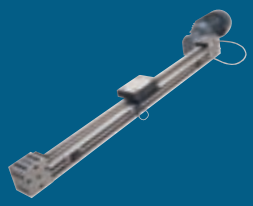

DLS
Linear Transmission and Positioning System

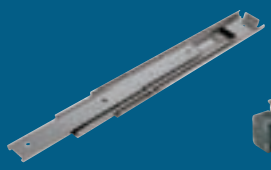

HTS
Telescopic Ball Bearing Slides

HPS
Powerslide-2 Guided Rodless Cylinder

MHD
Heavy Duty Track Roller Guidance System

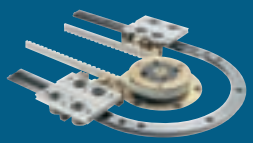

DTS
Driven Track System

BSP
Ballscrew Premier

Simple Select®
Vee Slide Linear Guidance Systems

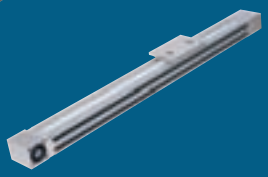

PDU2
Profile Driven Unit

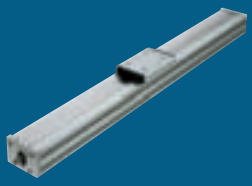

PSD120
Profile Screw Driven Unit

Bishop-Wisecarver Product Range

HepcoMotion® – Exclusive European partners and distributors for Bishop-Wisecarver since 1984.

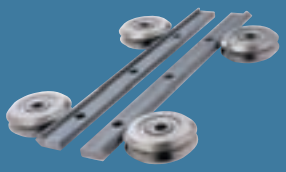

DUALVEE®
Single Edge Slide System

LoPro®
Aluminium Based Slide System

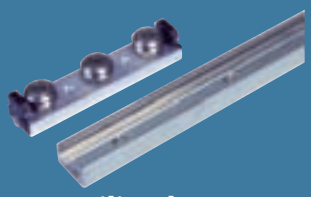

UtiliTrak®
Lightweight U Channel Guideway

For further information on HepcoMotion® products – please request our leaflet 'FPL'

HEPCO®
www.HepcoMotion.com

HepcoMotion®
Lower Moor Business Park, Tiverton Way, Tiverton, Devon, England EX16 6TG
Tel: +44 (0)1884 257000 Fax: +44 (0)1884 243500
E-mail: sales@hepcomotion.com

CATALOGUE No. HTS 03 UK © 2008 Hepco Slide Systems Ltd.

Reproduction in whole or part without prior authorisation from Hepco is prohibited. Although every effort has been made to ensure the accuracy of the information in this catalogue, Hepco cannot accept liability for any omissions or errors. Hepco reserves the right to make alterations to the product resulting from technical developments.

Many Hepco products are protected by: Patents, Copyright, Design Right or Registered Design. Infringement is strictly prohibited and may be challenged in law.The Customer's attention is drawn to the following clause in Hepco's conditions of sale:

'It shall be the Customer's sole responsibility to ensure that goods supplied by Hepco will be suitable or fit for any particular application or purpose of the Customer, whether or not such application or purpose is known to Hepco. The Customer will be solely responsible for any errors in, or omissions from, any specifications or information the Customer provides. Hepco will not be obliged to verify whether any such specifications or information are correct or sufficient for any application or purpose.'

Hepco's full conditions of sale are available on request and will apply to all quotations and contracts for the supply of items detailed in this catalogue.

HepcoMotion is the trading name of Hepco Slide Systems Ltd.

INVESTOR IN PEOPLE

ISO 9001