www.bergab.ru Берг АБ skf@bergab.ru Тел.(495)-228-06-21,факс (495) 223-3071

SKF

SKF deep groove ball bearings for extreme temperatures cut machine life cycle costs

www.bergab.ru Берг АБ skf@bergab.ru Тел.(495)-228-06-21,факс (495) 223-3071

Contents

Made by SKF® stands for excellence. It symbolises our consistent endeavour to achieve total quality in everything we do. For those who use our products, “Made by SKF” implies three main benefits.

Reliability – thanks to modern, efficient products, based on our worldwide application know-how, optimised materials, forward-looking designs and the most advanced production techniques.

Cost effectiveness – resulting from the favourable ratio between our product quality plus service facilities, and the purchase price of the product.

Market lead – which you can achieve by taking advantage of our products and services. Increased operating time and reduced down-time, as well as improved output and product quality are the key to a successful partnership.

1 Product information 3

Fit and forget 3
Why SKF extreme temperature bearings are the perfect choice 3
Comprehensive, unrivalled range 4
Customised for special purposes 6
Accessories for optimum performance 6
The design makes all the difference 7

2 Recommendations 8

How to decrease life-cycle cost 8
Application examples 8
Selection of bearing size 10
Kiln truck wheel bearing arrangement design 12
Mounting, dismounting and maintenance 14
Mounting 14
Dismounting 14
Maintenance 14

3 Product data 15

Bearing data – general 15
Bearing tables 16
Bearings d 12 – 35 mm 16
Bearings d 40 – 60 mm 18
Bearings d 65 – 120 mm 20

The SKF Group – a worldwide corporation 22

www.bergab.ru Берг АБ skf@bergab.ru Тел.(495)-228-06-21 факс (495) 223-3071

Fit and forget

Wherever very high or very low environmental temperatures are a limiting factor, a special bearing is normally needed. The application requirements – low friction and high radial loads – define the basic design concept as a deep groove ball bearing.

If the application is demanding and reliable operation under all temperature conditions including extreme operating temperatures with low operation costs is mandatory, an SKF deep groove ball bearing for extreme temperatures is definitely needed.

Why SKF extreme temperature bearings are the perfect choice

Total quality is a must in modern industry. The SKF philosophy has always been to satisfy customer needs and total quality is a natural part of SKF bearing design. This means that SKF today has a very comprehensive range of extreme temperature bearings in terms of

- low life-cycle cost
- long service life
- high reliability
- minimised maintenance

These benefits make SKF extreme temperature bearings the very foundation of trouble-free operation and total quality. These bearings are truly exceptional. They are the perfect choice because of their attractive combination of benefits:

- **Extended service life**
  SKF extreme temperature bearings are designed to give extended service lives with a minimum of maintenance. SKF is the only bearing manufacturer using graphite cage technology, thus eliminating the need for any maintenance or service whatsoever.

- **Very wide operating temperature range**
  Special lubricants make it possible to use some of the bearings down to –150 °C and up to a maximum operating temperature of +350 °C.

- **Doubly shielded**
  The extreme temperature bearings can be fitted with protective shields, one on each side, to prevent ingress of solid contaminants and to keep the lubricant in place.

- **Environmentally safe**
  The SKF extreme temperature bearings use environmentally friendly materials and do not emit any hazardous products provided that their maximum allowable operating temperature is not exceeded.

www.bergab.ru Берг АБ skf@bergab.ru Тел.(495)-228-06-21 факс (495) 223-3071

Comprehensive, unrivalled range

The range of SKF extreme temperature bearings covers deep groove ball bearings in the 60, 62 and 63 series currently in demand, in sizes from 10 to 100 mm bore diameter. Taking availability into account, this constitutes the most complete range on the market. All bearings are available with cylindrical bore to suit most types of mounting methods.

SKF extreme temperature bearings are available in five different final variants:

1. 2Z/VA228 design – for top requirements
This bearing variant is the "top-of-the-line" among SKF products for extreme temperatures. It is fitted with the recently developed "coronet" cage of pure graphite which makes the bearings suitable for new applications. The cage can support appreciably heavier loads than the graphite segment cage. This means that in practice these bearings are suitable for applications where the operating temperature is in the range –150 to +350 °C and the speeds are up to 100 r/min.

The coronet cage is an SKF development and only available in SKF bearings. It not only separates the balls but also presents a unique lubrication system. The minute quantities of graphite powder released by the cage during rotation provide adequate lubrication for the bearing. The bearing is also equipped with two shields which prevent particulate contamination from entering the bearing and also guide the cage axially.

All surfaces of the bearing, including the shields, are manganese phosphated to protect against corrosion and also to enhance running properties. The radial internal clearance is four times C5. Another advantage of these bearings is that they are environmentally friendly. Even at maximum temperatures, no dangerous gases or vapours are emitted.

2. 2Z/VA208 design – for high demands
These bearings differ from the VA228 design only in their cage. Instead of the coronet cage, they have a segmented cage of graphite. The segments separate the balls and also provide the necessary lubrication. The bearings are fitted with two shields which axially guide the cage segments and prevent the entry of solid contaminants. Because of the segmented cage, these bearings are primarily intended for slowly rotating applications.

3. VA201 design – for the most common applications
These bearings are not sealed and have a pressed steel cage. The radial internal clearance is four times C5. All bearing surfaces are manganese phosphated. This protects the bearing from corrosion, enhances running properties and provides good adhesion for the lubricant.

The extreme temperature bearings of the VA201 design are lubricated with a polyalkylene glycol/graphite mixture which can be used at temperatures between –40 and +250 °C. At temperatures above +200 °C, dry lubrication pertains.

4. 2Z/VA201 design – added protection with shields
These bearings are of the same design as the VA201 bearings but have protective shields at both sides to prevent the ingress of solid contaminants. Additionally, these bearings have twice the amount of the polyalkylene glycol/graphite mixture as the open bearings.

General rule
The SKF extreme temperature bearings are primarily intended for shaft speeds up to approximately 100 r/min. For applications with higher speeds or different operating conditions, please contact SKF for advice and support.

5. 2Z/VA216 – for aggressive environments
For bearing arrangements where the environment is particularly aggressive, bearings of the 2Z/VA216 design are recommended. These bearings are charged with a creamy-white multipurpose grease based on a fluorinated polyether oil mixed with PTFE for operating temperatures from –40 to +230 °C. Otherwise the bearings have the same design as 2Z/VA201.

For normal cases, the lubricant fill is between 25 and 35 % of the free space in the bearing. On request other filling grades can be supplied (expressed as % of the free space in the bearing):

10 to 15 % (suffix A)
45 to 60 % (suffix B)
70 to 100 % (suffix C)

www.bergab.ru Берг АБ skf@bergab.ru Тел.(495)-228-06-21,факс (495) 223-3071

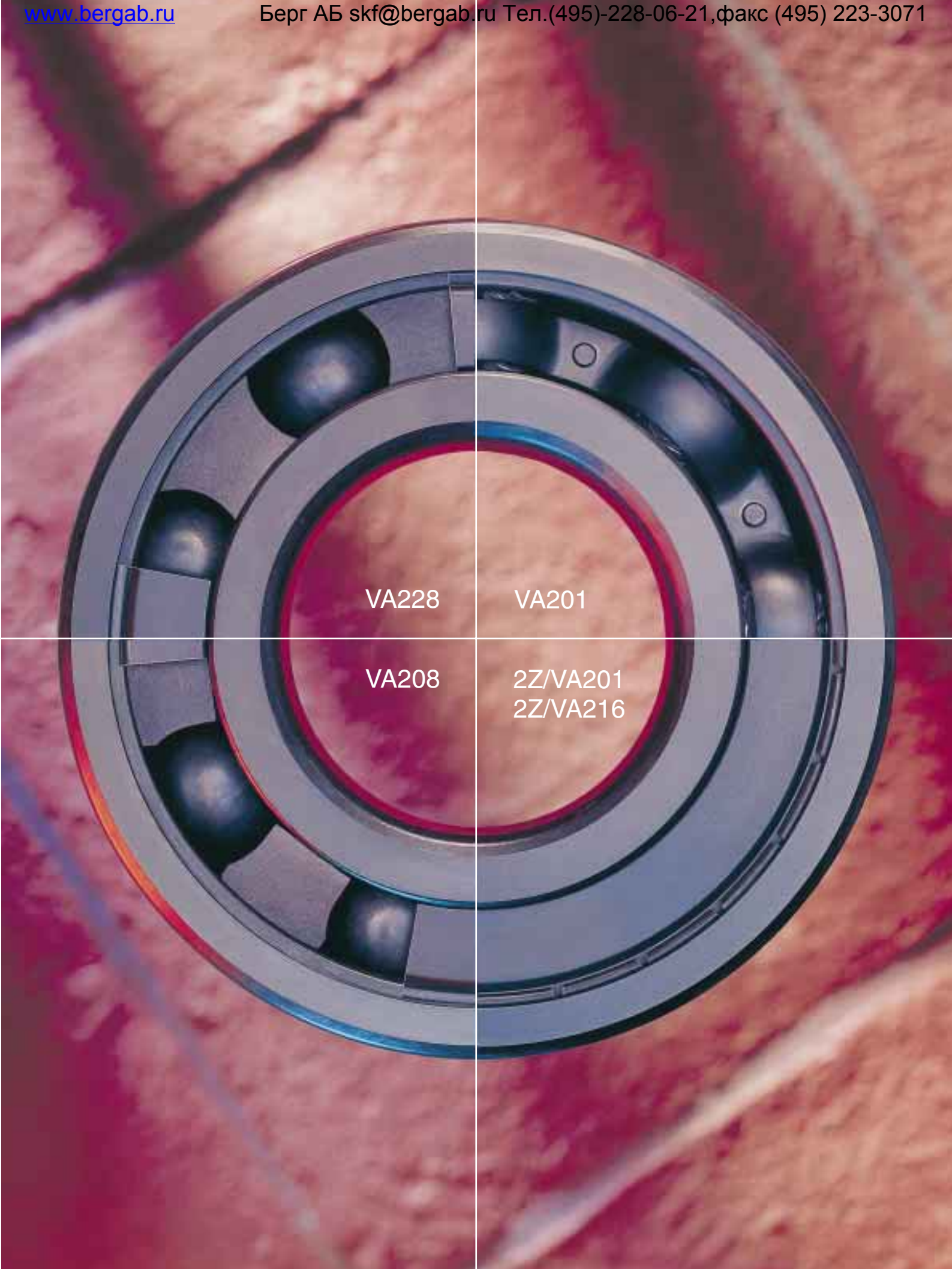

www.bergab.ru Берг АБ skf@bergab.ru Тел.(495)-228-06-21,факс (495) 223-3071

Product range Page ..... 8 Page 15

Customized for special purposes

SKF extreme temperature bearings are designed for the most common extreme temperature applications, e.g. kiln truck wheels, support rollers and general wheel arangements.

Specific customer requirements are satisfied by special order bearings. SKF can supply extreme temperature bearings which can replace the existing bearing design or which are the direct result of a joint design cooperation with the customer. SKF has a long tradition of supplying special feature bearings for especially demanding applications.

Y-bearing units for extreme temperatures

The SKF product range also includes Y-bearing units for operating temperature range –150 to +350 °C. They are available as

- Y-bearing plummer block units,
- Y-bearing flanged units with square housing, and
- Y-bearing flanged units with oval housing

The surfaces of the grey cast iron housings are coated with zinc and yellow chromate; this galvanised layer provides added protection against corrosion and gives the housings a distinctive appearance.

To meet the widely differing engineering demands in this wide temperature range, two different versions of bearings of series YAR 2-2FW are used: VA201 and VA228.

Full details will be found in brochure 4415 "SKF Y-bearing units for extreme temperatures".

The range of Y-bearing units is for shaft diameters of 30 to 60 mm and 3/4 to 2 7/16 in.

Accessories for optimum performance

The boundary dimensions of the SKF extreme temperature deep groove ball bearings of the 60, 62 and 63 series are in accordance with the ISO Dimension Plan. The bearings of series 62 can be used directly in SKF housings of TVN design. These housings are available in five sizes for shafts of 35 up to 65 mm diameter. In order to further protect the bearing, a heat resistant seal strip made of aluminum boron silicate can be used to prevent the ingress of contaminants from the surrounding environment. For more information please contact SKF.

www.bergab.ru Берг АБ skf@bergab.ru Тел.(495)-228-06-21 факс (495) 223-3071

The design makes all the difference

The various designs of SKF extreme temperature bearings are made with the customers needs and requirements in mind

- Extended service life
- Different lubrication systems
- Customised designs
- Different seal arrangements
- Operational cost savings

The philosophy behind SKF extreme temperature bearings is based on continuous development aiming at rugged and reliable bearings which can be used even in the most demanding applications. SKF extreme temperature bearings can often be used instead of expensive special bearings or intricate, extremely costly lubricants offered on the market.

The SKF extreme temperature bearings with the suffix VA201 offer the customer extended service life since the amount of lubricating paste is large, thus ensuring a good supply and an adequate reservoir of lubricant. When the bearing is fitted with two protective shields, 2Z/VA201, the amount of lubricant is even larger. This together with the shields will further prolong the service life. The shields also serve to retain the lubricant inside the bearing.

2Z/VA228 design

SKF extreme temperature bearings with suffix 2Z/VA208 have a segmented cage made from special graphite. The bearing also has two shields which will protect the bearing from particulate contamination as well as keep the graphite powder inside the bearing. Powdered graphite is slowly transferred from the cage segments to the bearing surfaces ensuring constant lubrication and long service life. No maintenance is required.

SKF extreme temperature bearings of the 2Z/VA228 design represent the latest development. They are fitted with a one-piece graphite cage instead of the segmented cage. Tests, both at low and high speeds (up to the maximum recommended) have shown extremely little wear. The service life has been appreciably extended as the cage has an optimum fit round the balls and thus has a low specific load. The design has very high performance and offers the longest service lives of all the present extreme temperature designs.

www.bergab.ru Берг АБ skf@bergab.ru Тел.(495)-228-06-21 факс (495) 223-3071

How to decrease life-cycle costs

Long service life, high reliability and minimal maintenance requirements have made SKF extreme temperature deep groove ball bearings the obvious choice in all industrial segments where temperatures are very high or very low and speeds low and where high running accuracy is not required. The key segments with their typical requirements are listed below, but applications can be found in many other industries where bearings are subjected to extreme temperatures.

One of the main reasons for SKF's dominant market position for extreme temperature bearings is the customers' ever increasing awareness about what bearing quality means to their machine life cycle cost.

Application examples

Foil calenders
The calenders were originally fitted with bearings which required frequent relubrication with expensive high temperature grease. Three have now been converted to SKF deep groove ball bearings of the VA228 design which require no maintenance. As a result, maintenance costs have been reduced by more than 1,2 million SEK per annum. In addition, the foil produced is much cleaner (no lubricant leakage to soil it).

Kiln trucks
The wheels are fitted with SKF deep groove ball bearings of the 2Z/VA208 design. Normal operating temperature is +200 to +230 °C. The original bearing design lasted between 3 months and one year but with the 2Z/VA208 design the service life could be extended to more than 4 years. Service lives of up to more than 12 years have been recorded in other similar applications. This means much lower bearing costs and also no wheel repairs were required.

Foil calender

Kiln truck

www.bergab.ru Берг АБ skf@bergab.ru Тел.(495)-228-06-21 факс (495) 223-3071

Page 3

Application examples

Page 15

Segments

- Bricks & tiles
- Ceramics
- Steel
- Food
- Autoclaves
- Materials handling
- Waste disposal

Requirements

- Long service life
- Application-adapted performance
- Minimum maintenance
- High availability
- Technical support

Solution

Tunnel furnace

The rollers operate at about +350 °C and carry the material to be heat treated. During a refit the original bearings, which had a service life of approximately 3 to 6 months, were replaced by SKF deep groove ball bearings of the 2Z/VA208 design, thus extending the service life to more than 7 years.

Overall operating costs have been considerably reduced as a result and it has also been possible to dispense with the original water cooling of the housings.

Wafer biscuits baking oven

The traditional wheel bearing design used standard deep grove ball bearings lubricated with a very expensive high temperature grease. The operating conditions with temperatures up to +240 °C warranted relubrication at regular intevals and frequent bearing replacement due to clogged/dried out grease plus corrosion. The normal service life was around 2 years. Extreme temperature bearings 2Z/VA208 were installed instead allowing a four-year period of maintenance-free operation.

Chain grate furnace

2 500 special SKF support rollers based on double row deep groove ball bearings fitted with graphite segment cages, design VA208, are used per furnace at operating temperatures up to +350 °C.

The original design wore out rapidly and increased the running friction dramatically. All rollers had to be changed within a year. The new SKF support rollers kept a very low coefficient of friction and lasted up to 4 years without maintenance.

Tunnel furnace

Wafer biscuits baking oven

Chain grate furnace

www.bergab.ru Берг АБ skf@bergab.ru Тел.(495)-228-06-21 факс (495) 223-3071

Selection of bearing size

Influence of operating temperature
At high temperatures, the load carrying capacity of the bearings is reduced. This is taken into consideration by multiplying the basic static load rating C_0 by a temperature factor f_T. Values of this factor at different temperatures will be found in **table** 1.

Selection of bearing size based on the static load rating
The size of bearing required for a given application is selected with reference to the loads which are to be expected and the load carrying capacity of the bearing. Bearings for extreme temperatures rotate at very slow speeds. Therefore, the requisite size is determined based on the basic static load rating C_0. The requisite basic static load rating can be determined using

$$C_0 = 2 \frac{P_0}{f_T}$$

where
C_0 = requisite basic static load rating of the bearing, N
P_0 = equivalent static bearing load, N
f_T = temperature factor (➔ **table** 1)

The equivalent static bearing load is obtained from

$$P_0 = 0{,}6\ F_r + 0{,}5\ F_a$$

where
P_0 = equivalent static bearing load, N
F_r = actual radial bearing load, N
F_a = actual axial bearing load, N

When calculating P_0, the maximum load which can occur should be used and its radial and axial components inserted in the equation above. If $P_0 < F_r$, then $P_0 = F_r$ should be used.

Using the requisite basic static load rating calculated from above, a suitable bearing can be selected from the bearing tables (from **page 16** onwards). If the requisite basic static load rating lies between two values in the bearing table the bearing with the higher rating should be chosen.

Selection of bearing size for kiln truck wheels
Bearing size is selected on the basis of the basic static load rating as kiln trucks operate at very slow speeds. For free wheels with two bearings of equal size (➔ **fig** 3, **page 13**) the requisite basic static load rating for one bearing is obtained from the equation

$$C_0 = 1{,}5 \frac{G_0}{f_T}$$

where
C_0 = requisite basic static load rating of a single bearing, N
G_0 = radial load acting on one wheel, N
f_T = temperature factor (➔ **table** 1)

Table 2 applies to arrangements comprising two bearings of the same size mounted symmetrically with respect to the plane of the load and gives the requisite basic static load rating depending on wheel load and temperature, calculated using the above equation, for one bearing.

For a free-wheel arrangement with bearings of different size (➔ **fig** 4, **page 13**) the requisite value of C_0 for the inboard (tyre rim) side is obtained from

$$C_0 = 2 \frac{G_0}{f_T}$$

and for the outboard (cover) side, from

$$C_0 = \frac{G_0}{f_T}$$

The requisite basic static load rating of bearings in axleboxes inside or outside the wheel (➔ **fig** 5, **page 13**) is obtained using the equation

$$C_0 = 2 \frac{G_0}{f_T}$$

Using the values of the requisite basic static load rating C_0 calculated using the above equations, or obtained from **table** 2, suitable bearings of series 60, 62 or 63 can be selected from the bearing tables (from **page 16** onwards).

If the requisite basic static load rating lies between two values in the bearing table, the bearing with the higher load rating should always be chosen. The diameter of the journal must always be checked with regard to its strength.

www.bergab.ru Берг АБ skf@bergab.ru Тел.(495)-228-06-21 факс (495) 223-3071

Calculation example

A kiln truck has four wheels of the free wheel type, i.e. the axle does not rotate. Each wheel has two bearings of the same size.

Operating conditions:

Speed: Intermittent, approximately 2 r/min
Load per wheel: 15 000 N
Temperature: 250 °C

The requisite load rating C_0 is obtained from

$$C_0 = 1{,}5 \frac{G_0}{f_T}$$

so that

$C_0 = 1{,}5 \times 15\,000/0{,}9$

$C_0 = 25\,000$ N

Thus a bearing having a basic static load rating C_0 of at least 25 000 N is required, for example, bearing 6211-2Z/VA208, which has a C_0 value = 29 000 N.

Factor f_T

Table 1

Operating temperature	Factor f_T
°C	–
150	1
200	0,95
250	0,9
300	0,8
350	0,64

Table 2

Wheel load	Requisite basic static load rating C_0 for operating temperatures				
	150 °C	200 °C	250 °C	300 °C	350 °C
N	N				
3 000	4 500	4 740	5 000	5 630	7 030
4 000	6 000	6 320	6 670	7 500	9 380
5 000	7 500	7 900	8 380	9 380	11 700
6 000	9 000	9 470	10 000	11 300	14 100
7 000	10 500	11 100	11 700	13 100	16 400
8 000	12 000	12 600	13 300	15 000	18 800
9 000	13 500	14 200	15 000	16 900	21 100
10 000	15 000	15 800	16 700	18 800	23 400
11 000	16 500	17 400	18 300	20 600	25 800
12 000	18 000	18 900	20 000	22 500	28 100
13 000	19 500	20 500	21 700	24 400	30 500
14 000	21 000	22 100	23 300	26 300	32 800
15 000	22 500	23 700	25 000	28 100	35 200
16 000	24 000	25 300	26 700	30 000	37 500
17 000	25 500	26 800	28 300	31 900	39 800
18 000	27 000	28 400	30 000	33 800	42 200
19 000	28 500	30 000	31 700	35 600	44 500
20 000	30 000	31 600	33 300	37 500	46 900
22 000	33 000	34 700	36 700	41 300	51 600
24 000	36 000	37 900	40 000	45 000	56 300
26 000	39 000	41 100	43 300	48 800	60 900
28 000	42 000	44 200	46 700	52 500	65 600
30 000	45 000	47 400	50 000	56 300	70 300
32 000	48 000	50 500	53 300	60 000	75 000
34 000	51 000	53 700	56 700	63 800	79 700
36 000	54 000	56 800	60 000	67 500	84 400
38 000	57 000	60 000	63 300	71 300	89 100
40 000	60 000	63 200	66 700	75 000	93 800

Requisite basic static load rating C_0 for a deep groove ball bearing for free wheels with two bearings of the same size

www.bergab.ru Берг АБ skf@bergab.ru Тел.(495)-228-06-21 факс (495) 223-3071

Kiln truck wheel bearing arrangement design

Traditionally, the wheel arrangements of conventional two-axled kiln trucks (➔ **fig** 1) are usually designed as free-wheel (independent) arrangements. Two deep groove ball bearings are mounted directly on the journal. This design permits simple mounting and dismounting as well as easy inspection of the bearings. Deformation of the axle or bogie under load or as a result of temperature changes will not have a detrimental effect on bearing performance. The hub bore is sealed at the outboard position by a cover and at the inboard position by a seal. Labyrinth seals have proved to be the most suitable; felt seals are unable to withstand the high temperatures. The labyrinth seal must have a relatively large radial clearance to match the large internal clearance of the bearing. Suitable hub bore and journal tolerances are given in **table** 1.

To avoid excessive tilting forces which can occur, for example, if forces act on the wheel at right angles to the direction of travel, a ratio of 4:1 is recommended for the wheel diameter D to the distance between bearings a (➔ **fig** 2). The free-wheel design incorporating two bearings of equal size (➔ **fig** 3) is generally used for kiln trucks with wheel loads of up to 30 kN. For heavier loads and wide gauge track a design with bearings of different size should be used, as the inboard bearing is more heavily loaded than that at the outboard position (➔ **fig** 4).

In addition to the free-wheel arrangement, kiln trucks are also fitted with axleboxes either inside or outside the wheel (➔ **fig** 5). For both designs housings are required which can be bolted to the frame of the kiln truck. Two bearings are needed for each wheel set: one locating and one non-locating. The axleboxes must be carefully mounted so that the bearings do not become preloaded, as this would make operation difficult and would cause premature failure. Because of the changes in axle length which result from temperature variation, it is necessary to ensure that axial displacement is possible in both directions, and that the amount of possible displacement is equal at both sides of the non-locating bearing.

SKF TVN housings are suitable as housings for these wheel bearing arrangements. When mounting outside the wheel the A type (for shaft ends, with cover) should be used. The B type (for through shafts) should be used for mounting inside the wheel. The standard felt strips of these bearings should be replaced by special strips (designated FSB ..) of high temperature material (graphited aluminium boron silicate). Suitable hub bore and journal tolerances are given in **table** 1.

Conventional kiln truck wheel bearing arrangement

Fig 1

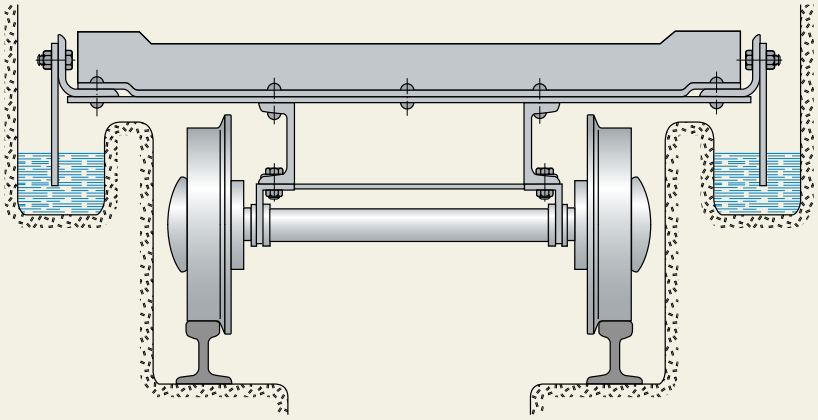

Recommended ratio wheel diameter/ bearing distance

Fig 2

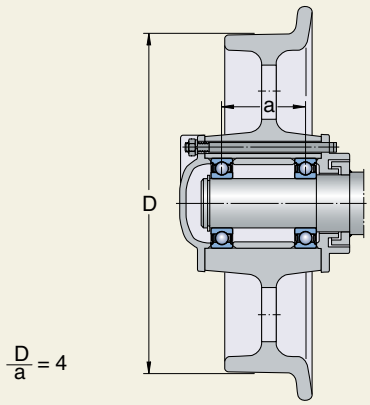

www.bergab.ru Берг АБ skf@bergab.ru Тел.(495)-228-06-21 факс (495) 223-3071

Page 3

Application advice

Page 15

Table 1

Application	Tolerance
Free wheels	
journal	g6
hub bore	J7
Rotating axles	
journal	j6
hub bore	H7[1)]

[1)] Tolerance D10 is recommended for autoclave trucks

Full details of TVN housings will be found in the SKF General Catalogue.

When making new designs for kiln trucks, free-wheel arrangements are to be preferred as they have been found to be superior in performance and also more economical.

Fig 3

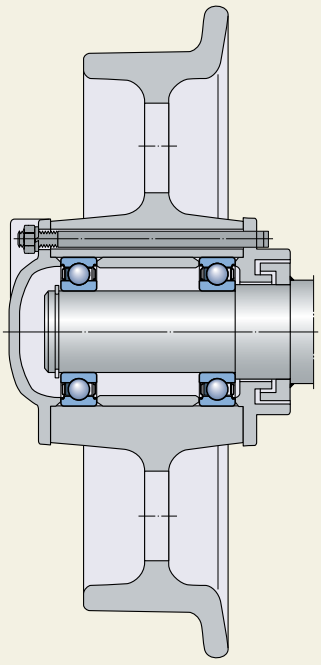

Free-wheel arrangement with two bearings of equal size

Fig 4

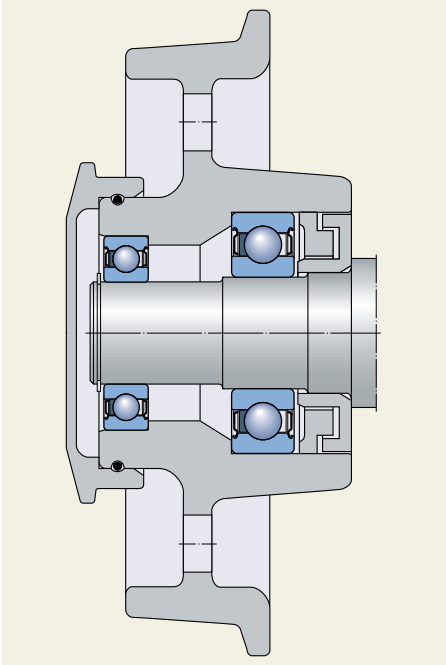

Free-wheel arrangement with two bearings of different size

Axlebox inside the wheel, TVN housing, type B (non-locating side) and axlebox outside the wheel, TVN housing, type A (locating side), respectively

Fig 5

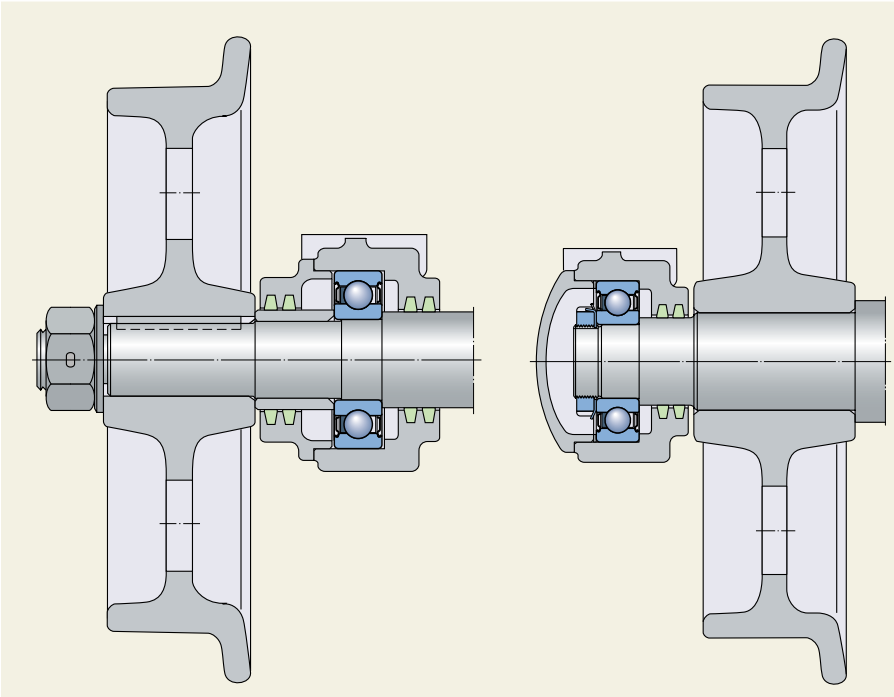

www.bergab.ru Берг АБ skf@bergab.ru Тел.(495)-228-06-21 факс (495) 223-3071

Mounting, dismounting and maintenance

Mounting

The SKF deep groove ball bearings for extreme temperatures are mounted with clearance or interference fits on the shaft and in the housing. A satisfactory radial location and an adequate support can generally only be obtained when one of the rings (depending on loading situation) is mounted with an appropriate degree of interference (➔ "Kiln truck wheel bearing arrangement design**", page 12**).

When mounting the bearings, the ring which is to have the tighter interference fit is generally mounted first. The force needed to mount a bearing increases considerably with increasing bearing size. Therefore, it is not generally possible to press large bearings on to a cylindrical shaft or into a housing in the cold state. In this case, depending on whether the interference is between bearing and shaft or bearing and housing, the bearing or the housing should be heated before mounting.

To mount with an interference fit on a shaft the bearing should be heated to about 80 to 90 °C above the temperature of the shaft. This can be done by means of an SKF induction heater or in a heating cabinet. Mounting bearings by cooling the shaft is not recommended. The risk of condensation causing corrosion is evident.

Dismounting

The force required to remove a bearing is generally greater than the mounting force, particularly if, after a long period of service, fretting corrosion is present. If bearings are to be re-used after removal, the force used to dismount them must on no account be applied through the rolling elements.

Please consult the SKF catalogue "The Tools for Trouble-Free Operation".

Extreme temperature bearings can be removed using mechanical or hydraulic withdrawal tools or a press.

For detailed information about suitable mounting and dismounting tools, please refer to the SKF catalogue "The Tools for Trouble-Free Operation".

Maintenance

SKF extreme temperature bearings are largely maintenance free. The bearings of VA201 design should however be inspected after some six months of operation. It is sufficient to open the housing or to withdraw the wheel with bearings from the journal and to remove contaminants using bellows.

If pressurised air is used the air stream should be weak and the air dry. Other inspection operations are generally only necessary once a year or once every second year depending on the operating conditions. If, however, the bearings do not rotate easily or have become noisy the bearing arrangement in question should be inspected immediately. In this case the bearings must be dismounted and after cleaning they should be checked to see whether they are suitable for further use.

If there is no longer a film of dry lubricant on the raceways (indicated by a bright metallic shiny track) the bearings should be relubricated using the original lubricant. The lubricant should be applied to the bearing raceways and the rings turned so that it is evenly distributed in the bearing. It should be remembered that dry lubricants do not adhere so well to the relatively smooth raceway surfaces of a used bearing. If there is damage to the raceways, rolling elements or cage or if there are signs of wear or corrosion it is safer to replace the bearings.

The same dry lubricant should also be applied thinly to all other shiny components of the bearing arrangement to protect them from corrosion.

www.bergab.ru Берг АБ skf@bergab.ru Тел.(495)-228-06-21,факс (495) 223-3071

Bearing data – general

Dimensions
The boundary dimensions of SKF deep groove ball bearings for extreme temperatures are in accordance with those of the Dimension Series 10, 02 and 03 as specified in ISO 15:1998.

Tolerances
The deep groove ball bearings for extreme temperatures are produced with normal tolerances to ISO 492:1994. Because of the special surface treatment which they undergo to protect against corrosion and enhance running properties there may be some slight deviations from the tolerances specified in the above standard. However, this has no influence on their arrangement or performance.

Internal clearance
The SKF deep groove ball bearings for extreme temperatures are produced with extra large radial internal clearance. The actual values are given in the bearing tables on **pages 16** to **21.** The clearance corresponds to about four times the standardised C5 clearance (4 × C5).

Misalignment
Because of the large clearance, these special deep groove ball bearings can tolerate angular misalignments of the inner ring relative to the outer ring of between 20 and 30 minutes of arc. This is only applicable when the bearings operate at low speeds as the rolling conditions in the bearings are unfavourable under such misalignment.

Speeds
SKF deep groove ball bearings for extreme temperatures were developed for bearing arrangements where they would rotate slowly, i.e. a few revolutions per minute. Our experience is, however, that it is possible to run the bearings at speeds up to 100 r/min. It is advisable to contact SKF application engineering service if the bearings are to be used at higher speeds than those for which they were designed.

Design of associated components
It is advisable to provide some support to the shields of bearings of the 2Z/VA228 and 2Z/VA208 designs, because of the nature of the graphite cage. Therefore it is recommended that the housing shoulder should have a diameter which is approximately equal to or slightly smaller than dimension D_2 (➔ bearing tables).

If this is not possible then a loose washer having such a bore diameter should be positioned between the bearing and the housing shoulder (➔ **fig** 1).

For all other bearing designs the shoulder should have a bore diameter not greater than $D_{a\ max}$.

Enquiries
When enquiring about the bearings for extreme temperatures it is recommended that, in addition to the number of bearings required, details regarding the application and operating conditions be given, for example:

1. Operating temperature
2. Bearing or wheel load
3. Speed
4. Shaft diameter
5. Wheel diameter
6. Axlebox design
7. Type of service, e.g. pottery kiln
8. Special conditions, e.g. very dusty environment

Recommended means of support for shields of 2Z/VA228 och 2Z/VA208 bearings

Fig 1

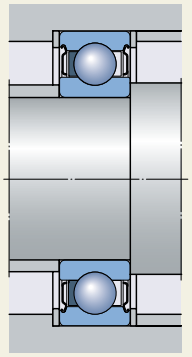

www.bergab.ru Берг АБ skf@bergab.ru Тел.(495)-228-06-21 факс (495) 223-3071

Page ..... 3 Page 8

Deep groove ball bearings for extreme temperatures
d **12 – 35** mm

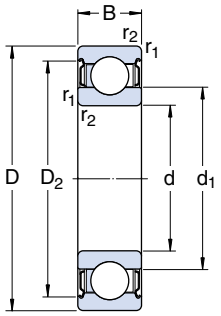

2Z/VA228

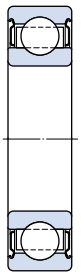
2Z/VA208

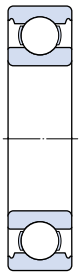
VA201

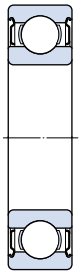
2Z/VA201

Principal dimensions			Basic static load rating	Radial internal clearance		Mass	Designation
d	D	B	C_0	min	max		
mm			N	µm		kg	–
12	32	10	3 100	100	180	0,037	**6201/VA201**
	32	10	3 100	100	180	0,037	**6201-2Z/VA201**
	32	10	3 100	100	180	0,037	**6201-2Z/VA228**
15	35	11	3 750	100	180	0,045	**6202/VA201**
	35	11	3 750	100	180	0,043	**6202-2Z/VA228**
17	35	10	3 250	100	180	0,039	**6003/VA201**
	35	10	3 250	100	180	0,039	**6003-2Z/VA208**
	40	12	4 750	100	180	0,065	**6203/VA201**
	40	12	4 750	100	180	0,060	**6203-2Z/VA228**
20	42	12	5 000	112	192	0,068	**6004-2Z/VA208**
	47	14	6 550	112	192	0,11	**6204/VA201**
	47	14	6 550	112	192	0,11	**6204-2Z/VA201**
	47	14	6 550	112	192	0,10	**6204-2Z/VA228**
	52	15	7 800	112	192	0,13	**6304/VA201**
	52	15	7 800	112	192	0,13	**6304-2Z/VA208**
25	47	12	6 550	120	212	0,080	**6005/VA201**
	47	12	6 550	120	212	0,080	**6005-2Z/VA208**
	52	15	7 800	120	212	0,13	**6205/VA201**
	52	15	7 800	120	212	0,13	**6205-2Z/VA201**
	52	15	7 800	120	212	0,12	**6205-2Z/VA228**
	62	17	11 600	120	212	0,23	**6305/VA201**
30	55	13	8 300	120	212	0,12	**6006-2Z/VA208**
	62	16	11 200	120	212	0,20	**6206/VA201**
	62	16	11 200	120	212	0,20	**6206-2Z/VA201**
	62	16	11 200	120	212	0,19	**6206-2Z/VA208**
	62	16	11 200	120	212	0,19	**6206-2Z/VA228**
	72	19	16 000	120	212	0,35	**6306/VA201**
	72	19	16 000	120	212	0,34	**6306-2Z/VA208**
35	72	17	15 300	160	256	0,29	**6207/VA201**
	72	17	15 300	160	256	0,28	**6207-2Z/VA208**
	72	17	15 300	160	256	0,28	**6207-2Z/VA228**
	80	21	19 000	160	256	0,46	**6307/VA201**
	80	21	19 000	160	256	0,44	**6307-2Z/VA208**

www.bergab.ru Берг АБ skf@bergab.ru Тел.(495)-228-06-21 факс (495) 223-3071

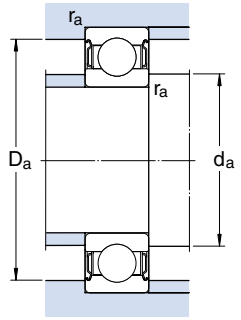

Dimensions				Abutment and fillet dimensions		
d	d_1	D_2	$r_{1,2}$ min	d_a min	D_a max	r_a max
mm				mm		
12	18,2	27,4	0,6	16	28	0,6
	18,2	27,4	0,6	16	28	0,6
	18,2	27,4	0,6	16	28	0,6
15	21,5	30,4	0,6	19	31	0,6
	21,5	30,4	0,6	19	31	0,6
17	22,7	31,2	0,3	19	33	0,6
	22,7	31,2	0,3	19	33	0,6
	24,2	35	0,6	21	36	0,6
	24,2	35	0,6	21	36	0,6
20	27,2	37,2	0,6	23,2	38,8	0,6
	28,5	40,6	1	25	42	1
	28,5	40,6	1	25	42	1
	28,5	40,6	1	25	42	1
	30,3	44,8	1,1	26,5	45,5	1
	30,3	44,8	1,1	26,5	45,5	1
25	32	42,2	0,6	29	43	0,6
	32	42,2	0,6	29	43	0,6
	34	46,3	1	30	47	1
	34	46,3	1	30	47	1
	34	46,3	1	30	47	1
	36,6	52,7	1,1	31,5	55,5	1
30	38,2	49	1	34,6	50,4	1
	40,3	54,1	1	35	57	1
	40,3	54,1	1	35	57	1
	40,3	54,1	1	35	57	1
	40,3	54,1	1	35	57	1
	44,6	61,9	1,1	36,5	65,5	1
	44,6	61,9	1,1	36,5	65,5	1
35	46,9	62,7	1,1	41,5	65,5	1
	46,9	62,7	1,1	41,5	65,5	1
	46,9	62,7	1,1	41,5	65,5	1
	49,5	69,2	1,5	43	72	1,5
	49,5	69,2	1,5	43	72	1,5

www.bergab.ru Берг АБ skf@bergab.ru Тел.(495)-228-06-21 факс (495) 223-3071

Page ..... 3 Page 8

Deep groove ball bearings for extreme temperatures
d **40 – 60** mm

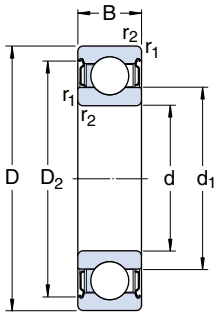

2Z/VA228

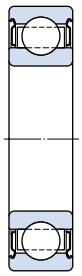
2Z/VA208

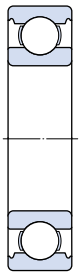
VA201

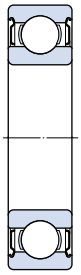
2Z/VA201

Principal dimensions			Basic static load rating	Radial internal clearance		Mass	Designation
d	D	B	C_0	min	max		
mm			N	µm		kg	–
40	68	15	11 600	160	256	0,19	**6008-2Z/VA208**
	80	18	19 000	160	256	0,37	**6208/VA201**
	80	18	19 000	160	256	0,35	**6208-2Z/VA208**
	80	18	19 000	160	256	0,35	**6208-2Z/VA228**
	90	23	24 000	160	256	0,63	**6308/VA201**
	90	23	24 000	160	256	0,61	**6308-2Z/VA208**
45	85	19	21 600	180	292	0,41	**6209/VA201**
	85	19	21 600	180	292	0,41	**6209-2Z/VA201**
	85	19	21 600	180	292	0,39	**6209-2Z/VA208**
	85	19	21 600	180	292	0,39	**6209-2Z/VA228**
	100	25	31 500	180	292	0,83	**6309/VA201**
	100	25	31 500	180	292	0,79	**6309-2Z/VA208**
50	80	16	16 000	180	292	0,26	**6010-2Z/VA208**
	90	20	23 200	180	292	0,46	**6210/VA201**
	90	20	23 200	180	292	0,46	**6210-2Z/VA201**
	90	20	23 200	180	292	0,45	**6210-2Z/VA208**
	90	20	23 200	180	292	0,45	**6210-2Z/VA228**
	110	27	38 000	180	292	1,05	**6310/VA201**
	110	27	38 000	180	292	1,04	**6310-2Z/VA208**
55	90	18	21 200	220	360	0,39	**6011-2Z/VA208**
	100	21	29 000	220	360	0,61	**6211/VA201**
	100	21	29 000	220	360	0,59	**6211-2Z/VA208**
	100	21	29 000	220	360	0,59	**6211-2Z/VA228**
	120	29	45 000	220	360	1,35	**6311/VA201**
	120	29	45 000	220	360	1,35	**6311-2Z/VA208**
	120	29	45 000	220	360	1,33	**6311-2Z/VA228**
60	110	22	36 000	220	360	0,78	**6212/VA201**
	110	22	36 000	220	360	0,74	**6212-2Z/VA208**
	110	22	36 000	220	360	0,74	**6212-2Z/VA228**
	130	31	52 000	220	360	1,70	**6312/VA201**
	130	31	52 000	220	360	1,60	**6312-2Z/VA208**

www.bergab.ru Берг АБ skf@bergab.ru Тел.(495)-228-06-21,факс (495) 223-3071

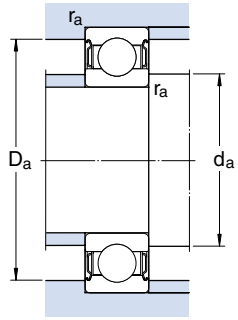

Dimensions				Abutment and fillet dimensions		
d	d_1	D_2	$r_{1,2}$ min	d_a min	D_a max	r_a max
mm				mm		
40	49,3	61,1	1	44,6	63,4	1
	52,6	69,8	1,1	46,5	73,5	1
	52,6	69,8	1,1	46,5	73,5	1
	52,6	69,8	1,1	46,5	73,5	1
	56,1	77,7	1,5	48	82	1,5
	56,1	77,7	1,5	48	82	1,5
45	57,6	75,2	1,1	51,5	78,5	1
	57,6	75,2	1,1	51,5	78,5	1
	57,6	75,2	1,1	51,5	78,5	1
	57,6	75,2	1,1	51,5	78,5	1
	62,1	86,7	1,5	53	92	1,5
	62,1	86,7	1,5	53	92	1,5
50	59,8	72,8	1	54,6	75,4	1
	62,5	81,7	1,1	56,5	83,5	1
	62,5	81,7	1,1	56,5	83,5	1
	62,5	81,7	1,1	56,5	83,5	1
	62,5	81,7	1,1	56,5	83,5	1
	68,7	95,2	2	59	101	2
	68,7	95,2	2	59	101	2
55	66,3	81,5	1,1	61	84	1,0
	69	89,4	1,5	63	92	1,5
	69	89,4	1,5	63	92	1,5
	69	89,4	1,5	63	92	1,5
	75,3	104	2	66	109	2
	75,3	104	2	66	109	2
	75,3	104	2	64	111	2
60	75,5	97	1,5	68	102	1,5
	75,5	97	1,5	68	102	1,5
	75,5	97	1,5	68	102	1,5
	81,8	113	2,1	71	119	2
	81,8	113	2,1	71	119	2

www.bergab.ru Берг АБ skf@bergab.ru Тел.(495)-228-06-21 факс (495) 223-3071

Page ..... 3 Page 8

Deep groove ball bearings for extreme temperatures
d **65 – 120** mm

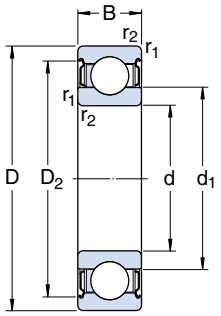

2Z/VA228

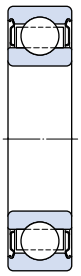
2Z/VA208

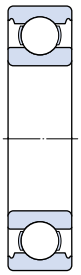
VA201

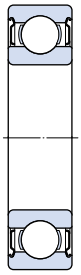
2Z/VA201

Principal dimensions			Basic static load rating	Radial internal clearance		Mass	Designation
d	D	B	C_0	min	max		
mm			N	µm		kg	–
65	120	23	40 500	220	360	0,99	**6213/VA201**
	120	23	40 500	220	360	0,99	**6213-2Z/VA208**
	120	23	40 500	220	360	0,99	**6213-2Z/VA228**
	140	33	60 000	220	360	2,10	**6313/VA201**
	140	33	60 000	220	360	2,00	**6313-2Z/VA208**
	140	33	60 000	220	360	2,00	**6313-2Z/VA228**
70	125	24	45 000	260	420	1,05	**6214/VA201**
	125	24	45 000	260	420	1,00	**6214-2Z/VA208**
	150	25	68 000	260	420	2,50	**6314/VA201**
	150	35	68 000	260	420	2,70	**6314-2Z/VA208**
75	130	25	49 000	260	420	1,20	**6215/VA201**
	130	25	49 000	260	420	1,20	**6215-2Z/VA201**
	130	25	49 000	260	420	1,20	**6215-2Z/VA208**
	130	25	49 000	260	420	1,20	**6215-2Z/VA228**
	160	37	76 500	260	420	3,00	**6315/VA201**
80	140	26	55 000	260	420	1,35	**6216-2Z/VA208**
85	150	28	64 000	300	480	1,80	**6217/VA201**
	150	28	64 000	300	480	1,70	**6217-2Z/VA208**
90	160	30	73 500	300	480	2,15	**6218-2Z/VA228**
100	150	24	54 000	300	480	1,25	**6020-2Z/VA208**
	180	34	93 000	300	480	3,15	**6220/VA201**
	180	34	93 000	300	480	3,15	**6220-2Z/VA208**
	180	34	93 000	300	480	3,15	**6220-2Z/VA228**
110	170	28	73 500	360	560	1,95	**6022-2Z/VA208**
120	180	28	80 000	360	560	2,05	**6024-2Z/VA208**

www.bergab.ru Берг АБ skf@bergab.ru Тел.(495)-228-06-21,факс (495) 223-3071

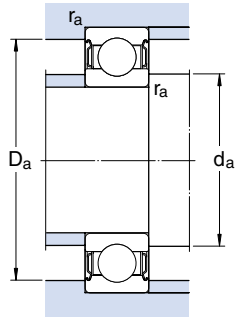

Dimensions				Abutment and fillet dimensions		
d	d_1	D_2	$r_{1,2}$ min	d_a min	D_a max	r_a max
mm				mm		
65	83,3	106	1,5	74	111	1,5
	83,3	106	1,5	74	111	1,5
	83,3	106	1,5	74	111	1,5
	88,3	122	2,1	76	129	2
	88,3	122	2,1	76	129	2
	88,3	122	2,1	76	129	2
70	87	111	1,5	78	117	1,5
	87	111	1,5	78	117	1,5
	94,9	130	2,1	81	139	2
	94,9	130	2,1	81	139	2
75	92	117	1,5	83	122	1,5
	92	117	1,5	83	122	1,5
	92,1	117	1,5	84	121	1,5
	92,1	117	1,5	84	121	1,5
	101	139	2,1	86	149	2
80	101	127	2	89	131	2
85	106	135	2	94	141	2
	106	135	2	94	141	2
90	112	143	2	99	151	2
100	116	138	1,5	107	143	1,5
	124	160	2,1	111	169	2
	125	160	2,1	111	169	2
	125	160	2,1	111	169	2
110	129	155	2	119	161	2
120	139	165	2	129	171	2

The SKF group – a worldwide corporation

SKF is an international industrial Group operating in some 130 countries and is world leader in bearings.

The company was founded in 1907 following the invention of the self-aligning ball bearing by Sven Wingquist and, after only a few years, SKF began to expand all over the world.

Today, SKF has some 45 000 employees and around 80 manufacturing facilities spread throughout the world. An international sales network includes a large number of sales companies and some 7 000 distributors and retailers. Worldwide availability of SKF products is supported by a comprehensive technical advisory service.

The key to success has been a consistent emphasis on maintaining the highest quality of its products and services. Continuous investment in research and development has also played a vital role, resulting in many examples of epoch-making innovations.

The business of the Group consists of bearings, seals, special steel and a comprehensive range of other high-tech industrial components. The experience gained in these various fields provides SKF with the essential knowledge and expertise required in order to provide the customers with the most advanced engineering products and efficient service.

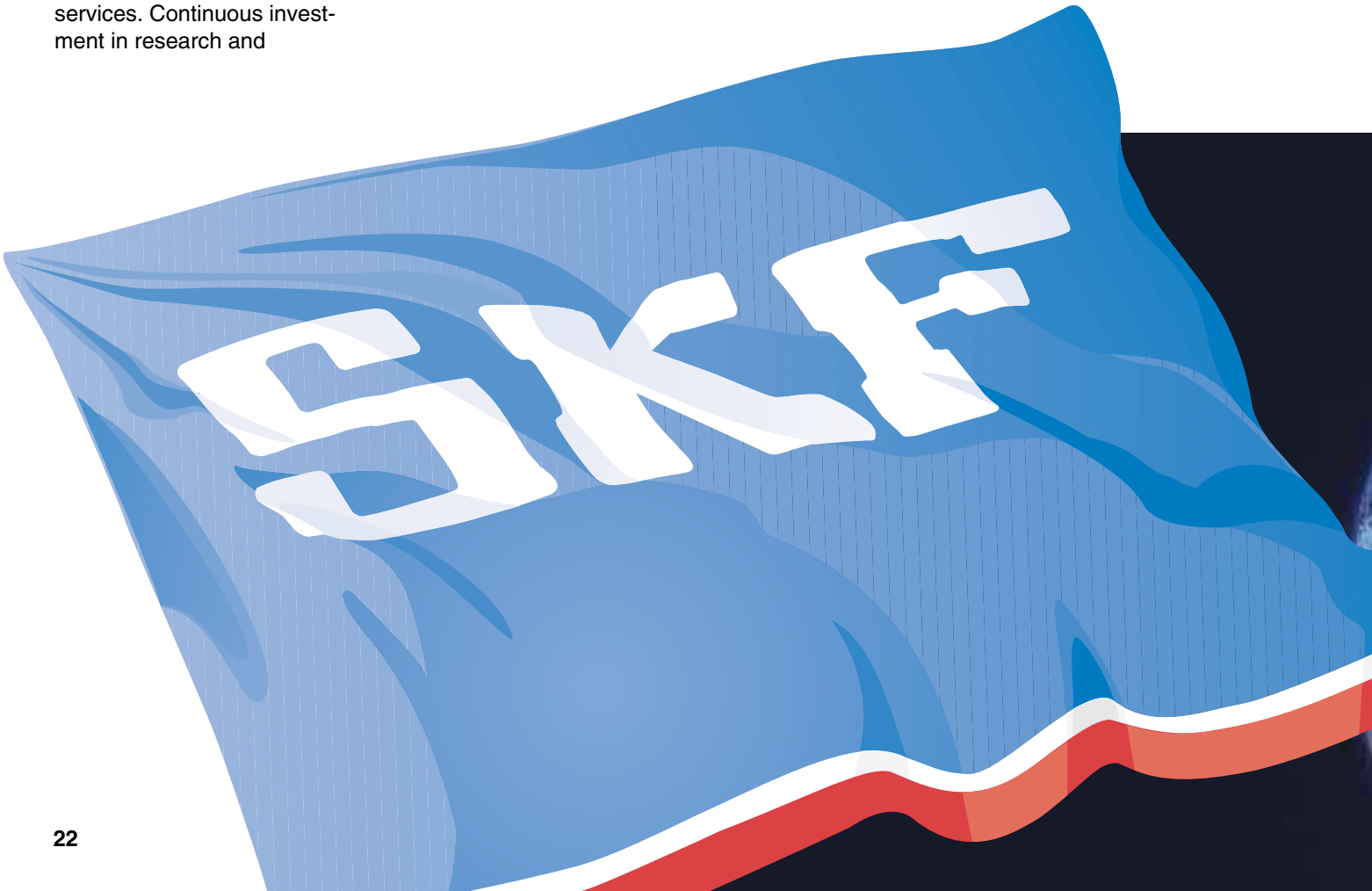

The SKF Group is the first major bearing manufacturer to have been granted approval according to ISO 14001, the international standard for environmental management systems. The certificate is the most comprehensive of its kind and covers more than 60 SKF production units in 17 countries.

The SKF Engineering & Research Centre is situated just outside Utrecht in The Netherlands. In an area of 17 000 square metres (185 000 sq.ft) some 150 scientists, engineers and support staff are engaged in the further improvement of bearing performance. They are developing technologies aimed at achieving better materials, better designs, better lubricants and better seals – together leading to an even better understanding of the operation of a bearing in its application. This is also where the SKF Life Theory was evolved, enabling the design of bearings which are even more compact and offer even longer operational life.

SKF has developed the Channel concept in factories all over the world. This drastically reduces the lead time from raw material to end product as well as work in progress and finished goods in stock. The concept enables faster and smoother information flow, eliminates bottlenecks and bypasses unnecessary steps in production. The Channel team members have the knowledge and commitment needed to share the responsibility for fulfilling objectives in areas such as quality, delivery time, production flow etc.

SKF manufactures ball bearings, roller bearings and plain bearings. The smallest are just a few millimetres (a fraction of an inch) in diameter, the largest several metres. SKF also manufactures bearing and oil seals which prevent dirt from entering and lubricant from leaking out. SKF's subsidiaries CR and RFT S.p.A. are among the world's largest producers of seals.

www.bergab.ru Берг АБ skf@bergab.ru Тел.(495)-228-06-21,факс (495) 223-3071

® SKF is a registrered trademark
of the SKF Group.

© Copyright SKF 2004
The contents of this publication are the copyright of the publisher and may not be reproduced (even extracts) unless permission is granted. Every care has been taken to ensure the accuracy of the information contained in this publication but no liability can be accepted for any loss or damage whether direct, indirect or consequential arising out of the use of the information contained here in.

Publication **4402/III E** · April 2004

Printed in Sweden on environmentally friendly, chlorine-free paper (Multiart Silk) by Tre Punkter Offsettryckeri.