www.bergab.ru Берг АБ skf@bergab.ru Тел.(495)-228-06-21,факс (495) 223-3071

SKF Nankou

www.bergab.ru

Берг АБ skf@bergab.ru Тел.(495)-228-06-21,факс (495) 223-3071

Content

General Introduction 02

Business 04

Customer Value 08

Products 10

Process 20

Business Excellence 22

General Introduction

SKF Global

SKF is a leading global supplier of bearings, seals, mechatronics, services and lubrication systems represented in more than 130 countries worldwide. SKF has over 130 manufacturing sites in 32 countries, over 46,000 employees, and more than 15,000 authorized distributors and agents. In 2012, its annual sales reached 64.575 billion SEK. With its e-commerce platforms and global distribution system, SKF is always close to its customers for the supply of both products and services.

SKF (China) Co., Ltd.

In China, SKF has over 6500 employees, 18 manufacturing sites, a number of sales offices and service units, and over 300 distributor locations to provide top quality products and services for customers. In 2010, SKF Global Technology Center China was set up in Shanghai. In 2012, SKF celebrated its 100th anniversary in China.

Beijing Nankou SKF Railway Bearings Co., Ltd.

Beijing Nankou SKF Railway Bearings Co., Ltd. (hereinafter as “SKF Nankou”) is a joint venture founded by SKF (China) Investment Co., Ltd. and Beijing Nankou Rail Transit Machinery Co., Ltd. of China CNR Group in 1996. The company has become a leading Chinese supplier of new type tapered roller bearings for freight wagons, locomotives, passenger trains and mass transportation vehicles.

At present, SKF Nankou has 650 employees, with annual sales of around RMB450 million. Each day, over 2 million bearings provided by SKF Nankou are operating on railway lines in China, Kazakhstan, South Korea, and Australia.

While providing high quality, reliable new bearings for railway customers, SKF Nankou also provides professional maintenance services for used bearings, including a unique service “refurbishment”.

We are targeted to build SKF Nankou into a top global railway bearing provider based on our knowledge, staff, and SKF care, all of which will lay a solid foundation for our success!

www.bergab.ru
Берг АБ skf@bergab.ru Тел (495)-228-06-21,факс (495) 223-3071

Business

Business

At present, products of SKF Nankou are used all over the world.

Research and Development of Freight Wagon Bearings

In China, SKF Nankou can provide quality and reliable new bearings for railway customers, and professional maintenance services for used bearings, including a bearing refurbishment service, unique in the Chinese market

Bearing Calculation

For selection of bearing units, SKF engineers can apply their rich application experiences to select the most suitable calculation method based on specific technical requirements to ensure design reliability and safety.

Basic rating life

For railway applications, it is preferable to calculate the life expressed in operating mileage, in million km.

$$L_{10s} = \frac{\pi D_w}{1\,000}\left(\frac{C}{P}\right)^p$$

Where:

L_{10s}= basic rating life (90% reliability), million km

D_w= mean wheel diameter, m

SKF rating life

The equation for the SKF rating life is in accordance with ISO 281.

$$L_{mm} = a_1 a_{skf} L_{10} = a_1 a_{skf}\left(\frac{C}{P}\right)^p$$

Where:

L_{mm}= SKF rating life, (100-n^1)% reliability, million of revolutions

a_1= life adjustment factor for reliability

a_{SKF}= SKF life modification factor

Advanced Calculation (SKF Bearing Beacon)

SKF Bearing Beacon is the mainstream bearing application programme used by SKF engineers to optimize the design of customers' bearing arrangements.

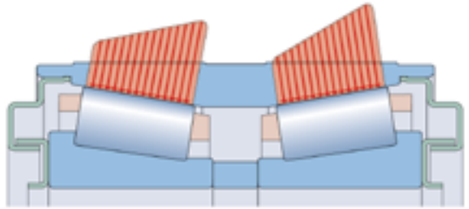

Load distribution on the roller set / outer ring raceway

Influence of The Adapter Geometry

The shape and flexibility of the adapter can deform the bearing outer ring. This affects the bearing operating conditions. SKF has developed methods and software tools to analyse such problems and can offer customers in-depth analysis and advice in these situations.

Model of a tapered roller bearing application with a saddle adapter

Contact pressure on the outer ring raceway for an adapter application

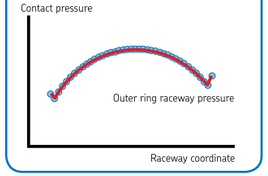

Finite Element Analysis (FEM)

SKF Nankou provides expert knowledge on design optimization:

1 Fretting corrosion caused by contact/ sliding between bearing and adapter;
2 Uneven load distribution caused by adapter deformation and shape;
3 Evaluation on bearing performance.

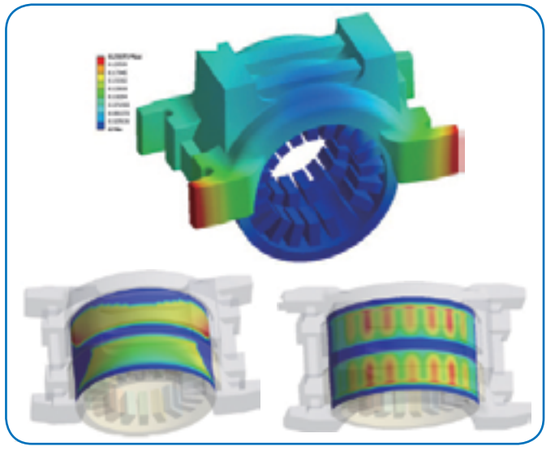

www.bergab.ru
Берг АБ skf@bergab.ru Тел.(495)-228-06-21,факс (495) 223-3071

Business

Bearing Test

In most cases, the actual operating conditions of vehicles will impact the service life of rolling bearings and may lead to premature damage in some cases. Therefore, timely inspection of bearings is necessary to discover any problem and take proper measures to prevent re-occurrence.

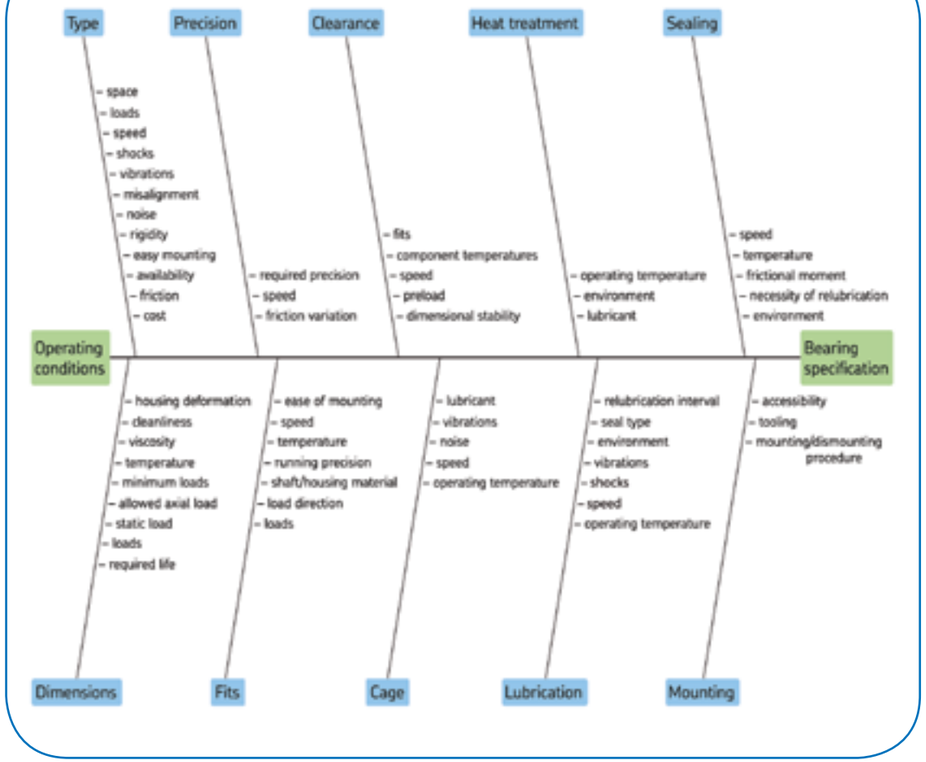

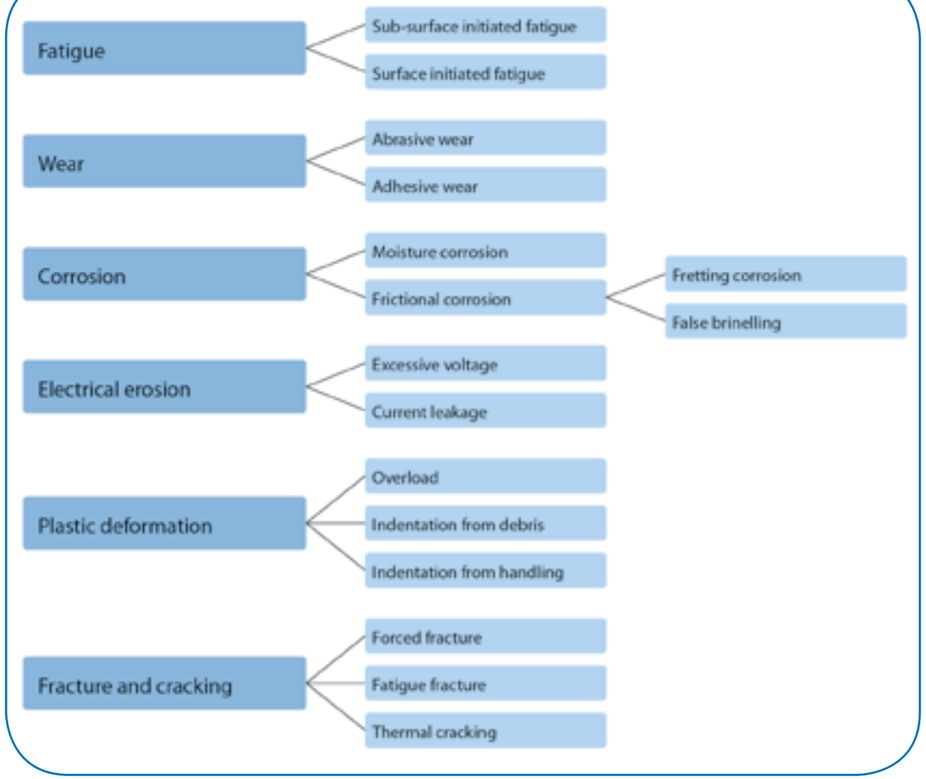

www.bergab.ru
Берг АБ skf@bergab.ru Тел.(495)-228-06-21,факс (495) 223-3071

SKF Nankou is part of a global manufacturing and service network.

SKF is able to provide the optimum solutions to maximize customers' value based on their specific requirements.

CTBU150 low temperature bearings manufactured by SKF Nankou are used in freight wagons manufactured by Qiqihaer Railway Rolling Stock Co., Ltd for Kazakhstan.

Customer Value

Customer Value

Customer service

On-site services, including mounting and dismounting of bearings

With our on-site services, customers can significantly save on the cost of replacing wheelset bearings and help to reduce vehicle downtime.

Bearing refurbishment

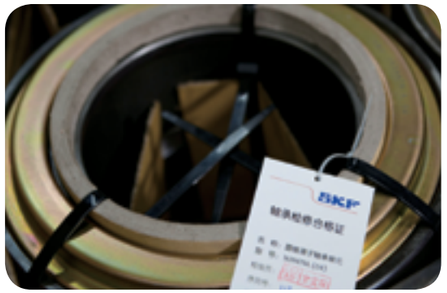

Customer Training

SKF Nankou provides professional training for senior technicians and workshop operators.

www.bergab.ru
Берг АБ skf@bergab.ru Тел.(495)-228-06-21,факс (495) 223-3071

Products

Products

SKF Nankou provides tapered roller bearing units (TBUs) and compact tapered roller bearing units (CTBUs) for various rail transit vehicles. The products have been widely used in freight wagons (including heavy wagons), subways and light rails.

Diverse bearing interface dimensions can meet the needs of various customers, which mainly include metric and inch bearings (with AAR approval certificate).

Structure and Dimensions of Metric TBU/CTBU

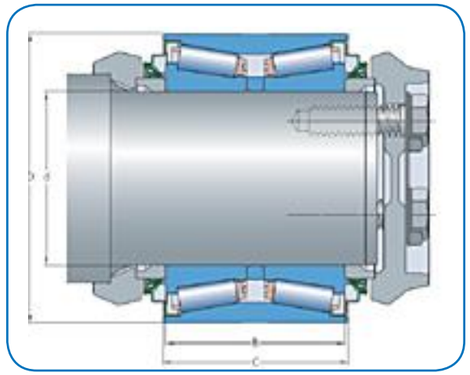

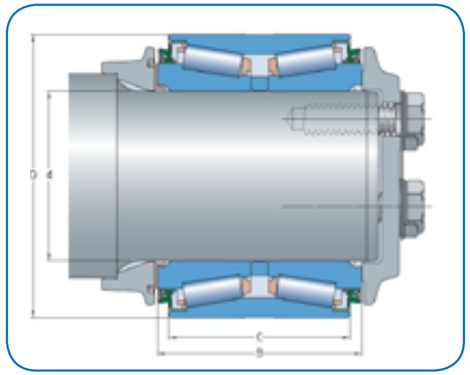

* These figures are for indication purpose only. The user is recommended to contact SKF for detailed product specifications.

Main Dimensions	Product Designation	d	D	B	C
–		mm			
TBU 120x195x131.35	1639609 DE	120	195	126	131.35
TBU 130x230x150	SKF197726	130	230	150	150
TBU 130x230x160	BT2-8546	130	230	150	160
TBU 150x250x160	SKF353130-2RS	150	250	154.5	160
CTBU 130x230x150	BT2-8670-01	130	230	166.35	150
CTBU 130x230x160	BT2-8671	130	230	176.35	160
CTBU 150x250x160	353130B	150	250	180.6	160
CTBU 150x250x160	BT2-8720 BD	150	250	180.6	160

Dimension and Designation of Inch TBU/CTBU

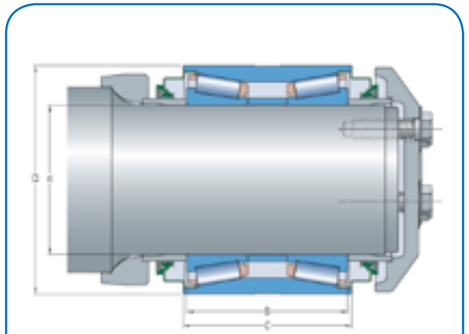

* These figures are for indication purpose only. The user is recommended to contact SKF for detailed product specifications.

Main Dimensions	Product Designation	d	D	B	C
–		mm (inch)			
Class C (5″ x9″)	BT2-8735 BB	119.008 (4.6885)	195.263 (7.6875)	36.525 (5.375)	142.875 (5.625)
Class D (5 $^{1}/_{2}$″ x10″)	BT2-8547 BB	131.775 (5.188)	207.963 (8.1875)	146.75 (5.778)	152.4 (6)
Class E (6″ x11″)	BT2-8516 BB	144.475 (5.687)	220.663 (8.6875)	155.575 (6.125)	163.51 (6.437)
Class F (6 $^{1}/_{2}$″ x12″)	BT2-8612 BB	157.175 (6.188)	252.413 (9.9275)	177.8 (7)	184.15 (7.25)
CTBU Class K (6 $^{1}/_{2}$″ x9″)	BT2-8606	157.175 (6.188)	250 (9.8425)	180.6 (7.1102)	160 (6.2992)

www.bergab.ru
Берг АБ skf@bergab.ru Тел.(495)-228-06-21,факс (495) 223-3071

Dimension and Designation of Heavy Load Bearings

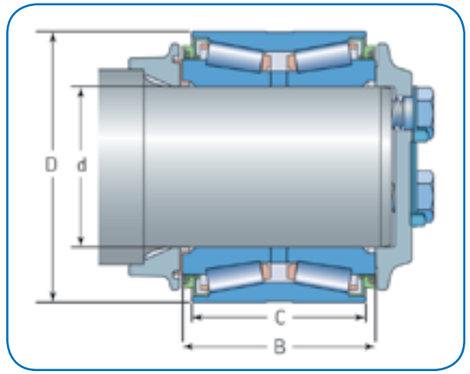

* These figures are for indication purpose only. The user is recommended to contact SKF for detailed product specifications.

Main Dimensions	d	D	B	C
–	mm			
CTBU 150×260×160	150	260	180.6	160
CTBU 160×270×170	160	270	195	170

Tapered Roller Bearing Units (TBU)

TBUs are sealed and pre-lubricated bearing units, which are designed to be mounted quickly and easily.

Main technical features:
- Optimized microgeometric shape for raceways;
- Optimized contact between roller end face and inner ring flange;
- Logarithmic roller, effectively reducing edge stress;
- Safe and reliable polymer cage.

Customer benefits:
- High safety and reliability;
- Low energy consumption;
- Easy mounting;
- Low service life cost.

Polymer cage

As a standard solution recommended by SKF, polymer cages can reduce bearing friction and improve the bearing service life. More importantly, they can effectively prevent heat cutting-axle fractures, which can greatly improve the safety of bearings.

Main technical features:
- Optimized geometric shape design, reducing the internal friction of bearings;
- Lower friction coefficient than steel, which can reduce the operating temperature and friction torque of bearings;
- Avoid grease contamination;
- Lower bearing weight;
- Special pockets, from which a roller may be removed, providing great convenience for appearance inspection of inner rings during bearing maintenance;
- Effective prevention against heat cutting-axle fractures to improve safety.

Integrated Labyrinth Lip (LL) low-friction seal

SKF Nankou adopts LL low-friction seal in TBU.

LL low-friction seal in TBU

low-friction seal in CTBU

www.bergab.ru

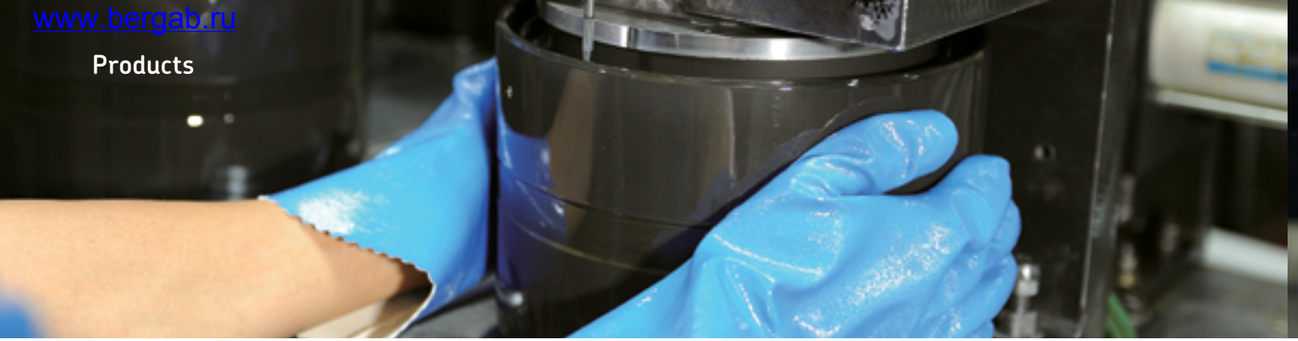

Берг АБ skf@bergab.ru Тел.(495)-228-06-21,факс (495) 223-3071

Main technical features:

- Longer service life of seal;
- Longer service life of grease;
- Lower operation cost;
- Lower operating temperature;
- Lower energy use and environment friendly;
- Seals more adaptive to low ambient temperature.

Dry Friction Torque and Wear Measurement

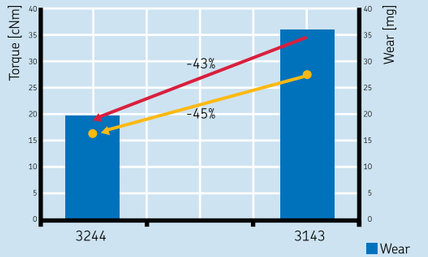

Running data	
average speed	80 km/h
wheel diameter	0.90 km
Medium–term mileage	800,000 km
CTBU friction torque (without seal)	11.5 Nm

	Estimated energy consumption by C–23 seal	Estimated energy consumption by AC–23 seal
Seal friction torque (2seals)	4 Nm	2 Nm
Total friction torque	15.5 Nm	13.5 Nm
Dissipated energy	27,556 MJ	24,000 MJ

Total energy conservation of bearing $= \frac{27{,}556-24{,}000}{27{,}556} = 0.13$ [MJ]

- Energy conservation 13%
- Equivalent to 26 MW (Assumed that 200,000 stocks are running at speed of 80 km/h)
- 26 MW is equivalent fired coal of 4.2 t/s

Design of anti-fretting corrosion spacer

Bending deformation of the wheelset axle will cause fretting corrosion between bearing components and between bearing components and adjacent components. By improving the materials of the spacer, fretting corrosion between inner rings and spacers is reduced, which can prolong the service life of bearings and avoid the loosening of axle end bolts caused by fretting corrosion.

Traditional design

Anti–fretting corrosion design

Compact Tapered Roller Bearing Units (CTBU)

SKF CTBUs are of compact design. In addition to the TBU features above, CTBUs also have the following technical features:

- Shortened journal, which can increase the service life of bearings;
- Anti-fretting corrosion polymer spacer is used to reduce bearing scrap rate;
- Reduced fretting corrosion inside the bearings, which can increase the service life of bearings;
- Reduced risk of bearing failure, which can improve reliability.

Patented anti-fretting corrosion polymer spacers

An SKF patented polymer spacer is used in the CTBU, which has been proven to be an effective solution to prevent fretting corrosion of the inner ring end face. The spacer has the following advantages:

- Prevention of fretting corrosion;
- Lower wearing on the contact between inner ring end face and back ring;
- Prevention of inner ring loosening;
- Improvement of cap screw reliability;
- Longer bearing service life.

Heavy load bearings

SKF Nankou provides 27 tons and 30 tons heavy load bearings. They are of compact design and have the following advantages besides those of standard compact bearings:

- LL low friction seal, which can reduce the bearing operating temperature;
- Low temperature and high performance grease, making the bearings more suitable for low temperature applications.

User benefits:

- Increased safety and reliability;
- Lower life cycle cost;
- Extended maintenance intervals;
- Better and longer performance.

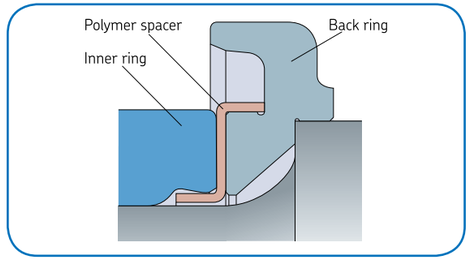

Without polymer spacer

With polymer spacer

www.bergab.ru

Берг АБ skf@bergab.ru Тел.(495)-228-06-21,факс (495) 223-3071

Bearing Refurbishment

Any bearing dismounting due to expiry of maintenance-free period or other reason, must be refurbished to ensure its safety, reliability and expected service life. Any defect in the bearing will be discovered during the refurbishment process and any bearings with critical defects are identified and scrapped. Non-critical defects can then be refurbished using a variety of processes to restore the bearing to operational condition.

SKF Nankou's refurbishment service covers various types of TBU/CRU applied in freight wagons, passenger trains, EMUs, and subways. With more than 10 years of refurbishment experience, SKF Nankou has refurbished over 100,000 bearing units, which deliver good operating performance thereafter.

The bearing refurbishment center is equipped with leading edge technology, all staff members have obtained the SKF Bearing Refurbishment Certificate through rigorous training and gained extensive experience of the refurbishment process. With the strict implementation of refurbishment standards as well as procedures, and driven by customer value, SKF Nankou is able to provide an excellent level of customer service.

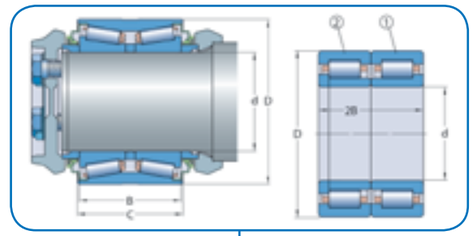

www.bergab.ru
Берг АБ skf@bergab.ru Тел.(495)-228-06-21,факс (495) 223-3071

Products

Bearing Remanufacturing

During refurbishment, some bearings would normally be scrapped because of surface defects or the overrun of geometrical dimensional precision, which can add up to a substantial cost for customers. Remanufacturing services provided by SKF can remedy surface defects of bearing components using grinding and honing methods and restore their geometrical precision equivalent to newly manufactured ones. Thus, the service life of bearings is greatly extended and the life cycle cost is reduced, resulting in substantial customer cost savings.

Surface defects before remanufacturing

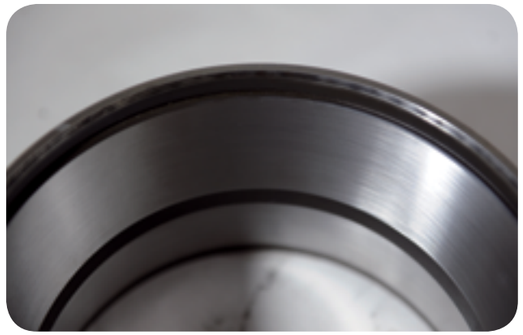

Surface after remanufacturing

SKF Nankou has imported industry-leading remanufacturing equipment , for example, honing and grinding machines, from Japan, Italy and Germany. All SKF staff engaged in remanufacturing have more than 10 years experience and possess comprehensive qualifications. SKF Nankou also adopts unique SKF bearing remanufacturing techniques and the ring honing technology developed by SKF can achieve optimum ring surface profile and quality, which helps to achieve optimum stress distribution on raceways and prolong the service life of bearings. Using advanced high-precision ultrasonic detection equipment to detect internal fractures in inner rings, SKF Nankou can ensure the internal quality and safety of bearings to the maximum extent.

The remanufacturing service offered by SKF Nankou mainly covers the following types of bearings: TBU130×230 (SKF 197726), TBU150×250 (SKF 353130-2RS) and CTBU150×250 (353130B). Up to now, SKF Nankou has remanufactured in excess of 1.7 million bearing units which have been widely used in various models of railway vehicles with axle load of 21 tons and 25 tons at maximum speed of 120 km/h.

www.bergab.ru
Берг АБ skf@bergab.ru Тел.(495)-228-06-21,факс (495) 223-3071

Process

World leading equipment and process

By continuously introducing advanced equipment, SKF Nankou has built a world leading bearing manufacturing equipment portfolio. SKF Nankou compliments this investment in leading edge technology by implementing business excellence and Six Sigma tools and methods to encourage all staff to continuously innovate in their work and improve process techniques. Furthermore, through knowledge and practical experience sharing, SKF Nankou continuously improves the techniques and equipment to maintain its leading position in the industry.

Conformance to SKF Group Quality Standards

The standards for product manufacturing and test at SKF Nankou are consistent with SKF Group standards to ensure that the bearing units manufactured by SKF Nankou have the same quality level with that of SKF facilities in Europe.

Conformance to SKF Group Quality Management System

The quality policies and quality management system of SKF Nankou are in accordance with SKF Group standards. Quality experts from SKF Group regularly audit the effectiveness of these quality management systems and provide guidance to ensure they meet the requirements of SKF. SKF Nankou has obtained ISO9001, IRIS, AAR M-934 and AAR M-1003 certificates.

High Quality and Reliability

Competent staff, advanced process techniques and equipment, and rigorous quality management ensure that SKF Nankou offers leading quality. The operating performance of the bearings applied in the railway industry are among the best.

www.bergab.ru
Берг АБ skf@bergab.ru Тел.(495)-228-06-21,факс (495) 223-3071

Business Excellence

Business Excellence

During over 100 years of development, SKF has formed its own business excellence culture focused on customer value. The objectives of such culture include: providing satisfactory products for customers, becoming their best partner and preferred supplier, caring for customers and understanding their needs, and helping customers to achieve their goals.

In practice, the concept of business excellence has become a bridge to connect the customers and SKF. Through close cooperation, SKF is ultimately able to create value for our customers.

Value represents belief followed by SKF staff, while drivers point us to our goals. The five principles embody the essence of lean production and Six Sigma.

SKF Business Excellence delivers value to customers in the most effective and efficient way possible, by utilizing the knowledge of employees, partners and the company's technology.

Drivers
Tell us where to go

Five Principles
The essence of lean production and Six Sigma

Values
Ethics followed by SKF Staff

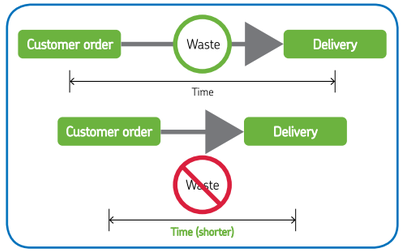

Six Sigma

SKF Six Sigma is a continuous improvement programme within SKF that targets waste and defects in all business processes. There are a number of tools and methodologies within the SKF Six Sigma programme, ranging from traditional DMAIC and Design for Six Sigma to Lean and other waste reducing methodologies. The foundations for SKF Six Sigma improvements are fact-based and sustainable and contribute to the business objectives.

With the implementation of Six Sigma in the company, our ultimate goal is to increase customer satisfaction, provide high quality products and services for customers.

www.bergab.ru Берг АБ skf@bergab.ru Тел.(495)-228-06-21,факс (495) 223-3071

Contact us

Address:
Beijing Nankou SKF Railway Bearings Co., Ltd.
Daobei, Nankou Town, Changping District
Beijing 102202, China

Tel
Tel: +86 (0) 10 6977 8240
Fax: +86 (0) 10 6977 8241

Sales Office
Tel: +86 (0)10 5101 3500
Fax: +86 (0)10 6978 8274

®SKF is a registered trademark of the SKF Group.

©SKF Group 2014
The contents of this publication are the copyright of the publisher and may not be reproduced (even extracts) unless prior written permission is granted. Every care has been taken to ensure the accuracy of the information contained in this publication but no liability can be accepted for any loss or damage whether direct, indirect or consequential arising out of the use of the information contained herein.

PUB GC/P2 14247EN • May. 2014

Certain image(s) used under license from Shutterstock.com.

www.skf.com www.skf.com.cn