Solutions from SKF

The better bearing solution for pulp and paper machinery

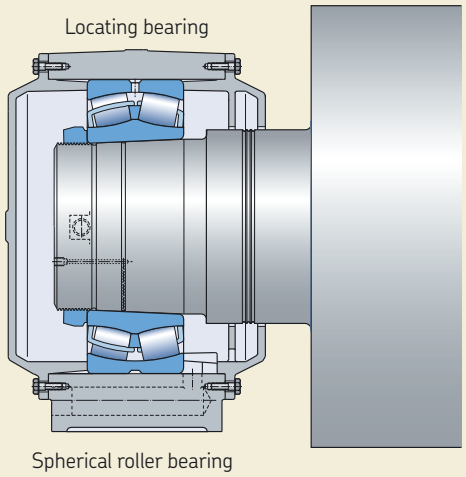

Benefits of the SKF self-aligning bearing system

- higher reliability
- longer service life
- optimum performance
- minimized maintenance costs

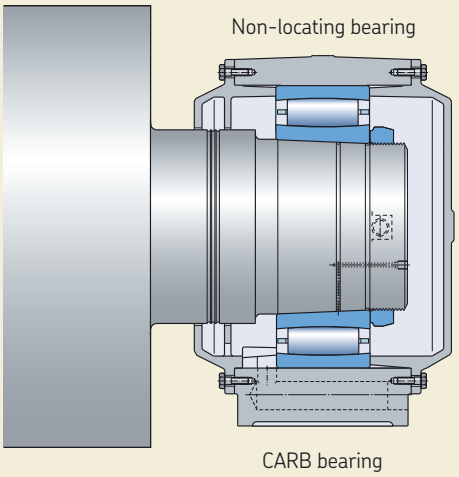

The conventional solution

The most common bearing solution for pulp and papermaking machines, until now, has been to use two double-row spherical roller bearings in separate plummer block housings (→ **fig. 1**).

This bearing solution allows a wide range of operating conditions. Furthermore, it accommodates the misalignment which inevitably occurs due, for instance, to machining tolerances, assembly errors, and/or deflection under load.

However, it has one shortfall: in order to allow axial expansion of the shaft due to changes in temperature, the outer ring of one bearing on each shaft (the "free" or "non-locating" bearing) must be able to slide inside the housing.

In order to achieve axial sliding, the housing bores are machined to give a loose fit for the bearing. However, a loose fit does not guarantee that the bearing will slide easily. Due to the friction between the bearing and the housing, some axial (thrust) force is generated within the bearing system. This thrust force creates vibration and high temperatures and results in reduced bearing life. This occurs to some extent even under ideal ("normal") operation.

If external factors such as corrosion, wear or deformed housings mean that the bearing outer ring is prevented from sliding, then the real friction will be much higher, and the effect on the bearing system much more severe (→ **fig. 2**).

For drying and Yankee cylinders, housings on rockers are often used. The axial displacement is then accommodated by a slight tilting of the rockers.

This has previously been the best solution for these applications and accordingly recommended by SKF. However, this housing arrangement is rather unstable and does not damp vibrations as well as solid housings; this may be a problem when upgrading to higher speeds.

The manufacturing cost of housings on rockers is high and maintenance costs due to wear of the rocker arrangement may also be high.

If the spherical roller bearing outer ring on the non-locating side is prevented from sliding, problems will occur leading to cross-located bearings, temperature increase, vibration and reduced bearing life. All load is taken up by the outside rollers

Fig. 2

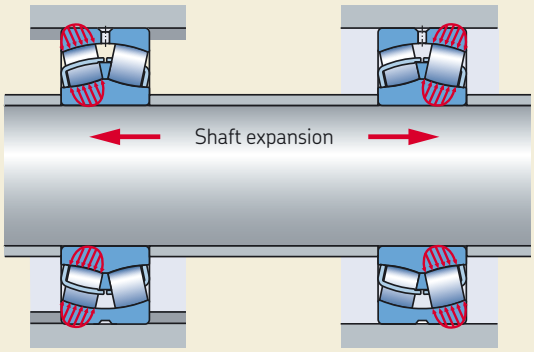

The conventional solution

Fig. 1

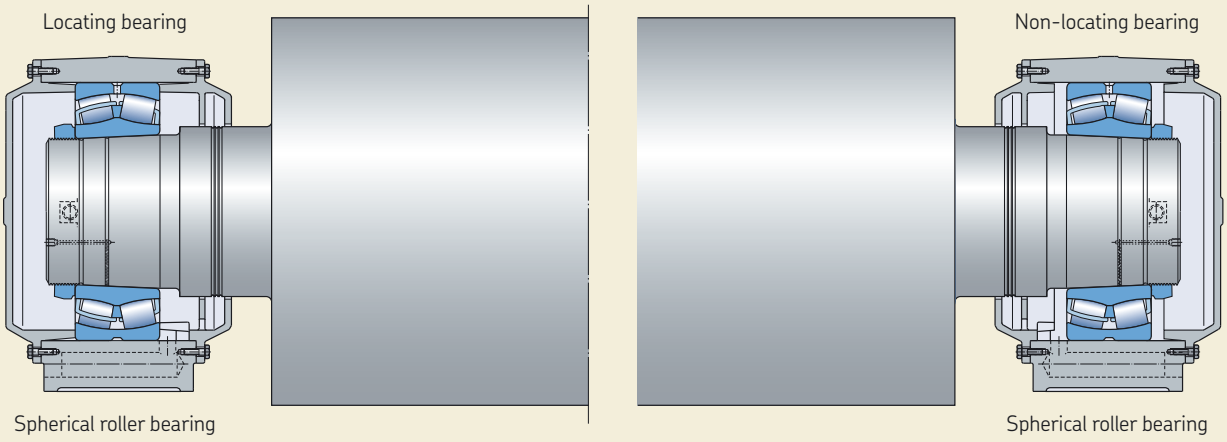

The SKF solution

The disadvantages/compromises with the old bearing arrangement can be avoided completely by replacing the non-locating bearing with CARB toroidal roller bearing from SKF. The spherical roller bearing at the locating position remains as before (→ **fig. 3**).

CARB bearing is a purely radial bearing, and cannot carry any axial loads. The bearing is the ideal non-locating bearing since it accommodates the axial expansion within the bearing itself, with negligible friction, at the same time as it allows misalignment. Therefore, high vibration levels, elevated temperatures, and reduced bearing lives are avoided (→ **fig. 4**).

CARB toroidal roller bearing can be used with the same housings and accessories as other self-aligning bearings. However, note that CARB bearing must be lubricated from the side, since it only has one row of rollers. The outer ring must also be axially located, i.e. the same housing design can be used on both sides. The type of lubricant, quantity of lubricant and relubrication intervals are the same as for spherical roller bearings.

Benefits of the SKF self-aligning bearing system

- higher reliability
- longer service life
- optimum performance
- minimized maintenance costs

With the combination of one spherical roller bearing and one CARB toroidal roller bearing, no axial loads will be induced. Both rows in the spherical roller bearing will carry load. Compare with fig. 2

Fig. 4

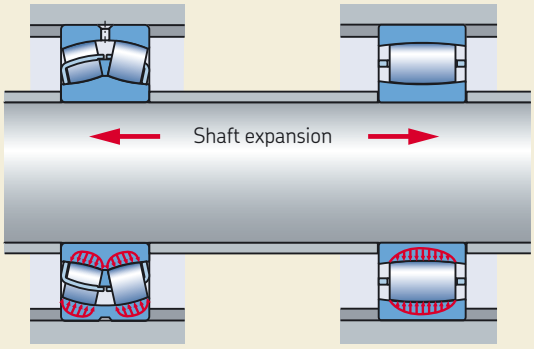

The SKF solution

Fig. 3

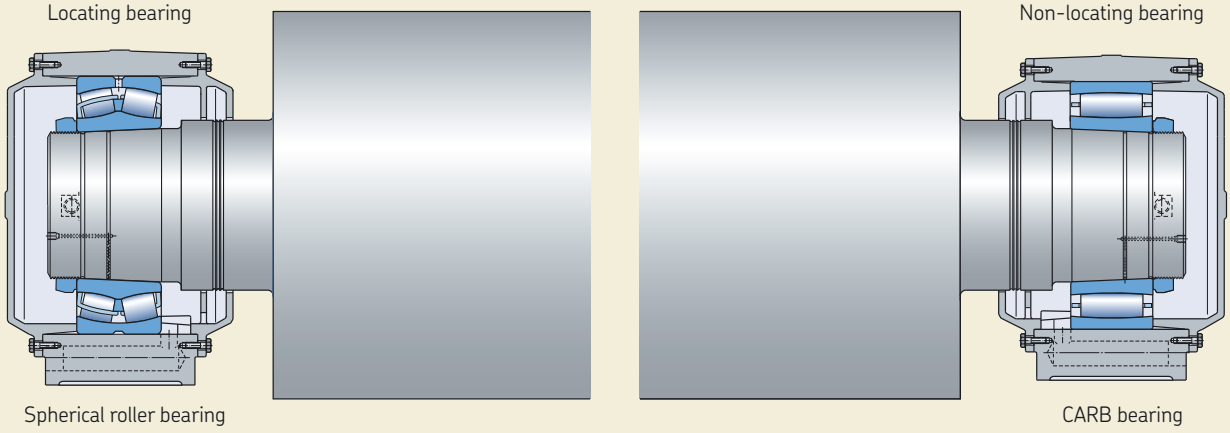

Diagram 1 shows comparative calculated basic rating (L_{10}) lives of an optimised bearing arrangement using one spherical roller bearing and one CARB toroidal roller bearing, and a conventional bearing arrangement using two spherical roller bearings. The chart assumes no externally applied loads on the system and that the coefficient of friction between the "free" spherical roller bearing and housing remains constant.

The actual coefficient of friction is very hard to determine; a normal assumption for an "ideal" bearing housing is that the coefficient is between 0,08 and 0,15. It does however vary significantly. Higher values are common and sometimes so high that the bearing becomes jammed in the housing.

Note that the combination of one spherical roller bearing and one toroidal roller bearing always has a longer basic rating life than the conventional bearing arrangement with two spherical roller bearings due to the absence of axial loads generated within the bearing system.

Diagram 1

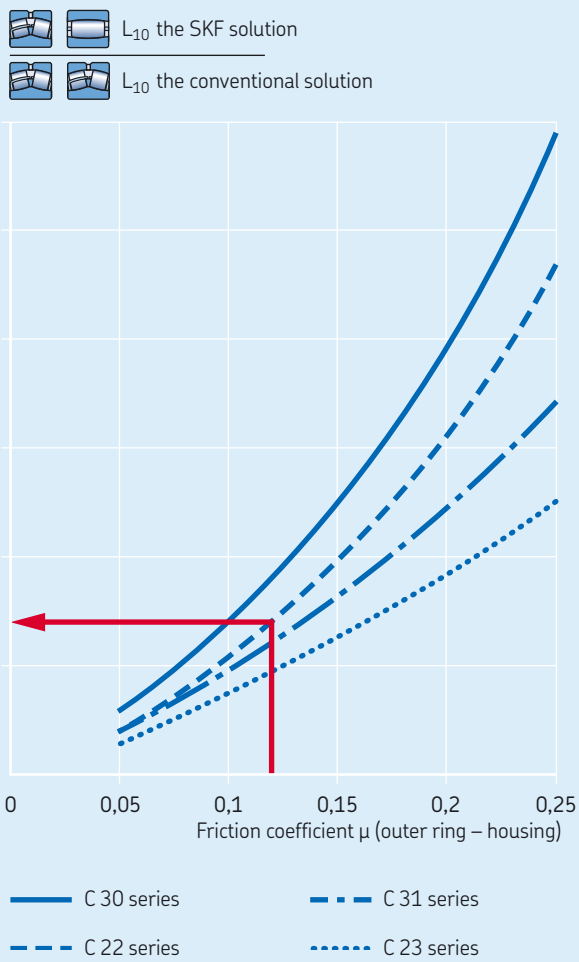

Example:
A bearing arrangement using one CARB toroidal roller bearing (C 2220 K) and one spherical roller bearing (22220 EK) is compared with an arrangement using two spherical roller bearings (22220 EK). Life increase is 2,4 times when μ = 0,12.

This bearing system life comparison shows that the combination of one spherical roller bearing and one toroidal roller bearing always has a higher basic rating life than an arrangement with two spherical roller bearings, due to the absence of axial loads generated within the bearing system

Publication **6330 EN** · May 2007

This publication supersedes publication 4815 E.

Printed in Sweden on environmentally friendly paper.