5 Calenders

Bearing arrangements 4

Calenders

Coated paper is calendered or glazed to achieve a smoother surface and to make the paper shiny. Unglazed coated paper is quite dull and has a fairly uneven surface. Calendering can completely change the character of the paper.

A distinction is made between machine calendering (or machine glazing) which is performed in the paper machine itself and supercalendering which is carried out as a separate operation. The machine calender stack consists of all-steel rolls and imparts a certain smoothness to the paper. However, for most grades of coated paper, this is not sufficient, and a subsequent glazing operation in the supercalender is necessary.

Machine calender

The machine calender is positioned after the dryer section and consists of a stack of two to eight steel rolls resting on top of each other (→ **fig 1**). On passing through the nips between the rolls, the paper is compressed and is given a smoother surface. In an eight-roll stack, the web is fed from the top downwards through seven roll nips with successively increasing nip pressure under the force of gravity. However, the nip pressures can be increased by applying pressure to the top roll. The king (bottom) roll is usually the driven roll. It is often a deflection-compensating roll which makes for a straight roll nip.

The result of the calendering operation is also temperature-dependent as the paper is more easily formable the higher the temperature. It is therefore customary to heat one or more of the calender rolls using hot water, oil or steam for this purpose.

Machine calender
1 *Spreader roll*
2 *Top roll*
3 *Intermediate roll*
4 *Queen roll*
5 *King roll*
6 *Paper web*

Fig. 1

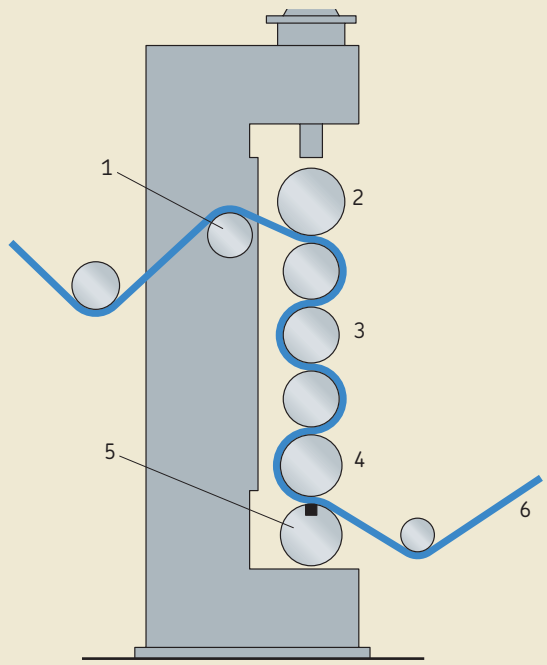

Supercalender

The supercalender, which is placed after the paper machine, consists of up to 14 rolls stacked one on top of the other (→ **fig 2**).

The other rolls are carried in arrangements which allow them to move in the upright members of the machine frame and the rolls accordingly rest on top of each other. Pressure can be applied to the top roll, either by means of levers, in the case of old supercalenders, or hydraulically, with supercalenders of more modern design.

The linear load in the bottom nip is usually 200–350 N/mm. The supercalender is usually driven by the bottom roll and the production speed may be above 2 000 m/min. The top and bottom rolls are usually of the deflection-controlling type.

The feature that chiefly differentiates supercalenders from machine calenders is that alternate rolls in the stack are made of chilled cast iron and rolls of softer material. To treat the paper equally on both sides, the glazing process is changed by placing two fibre rolls against each other in the middle of the stack. The glazing effect is produced by the sliding that occurs in the nip between the soft and hard rolls. The surface running against the hard roll is given the highest gloss.

To increase the glazing actions, some of the cast iron rolls are usually heated by hot water, steam or very hot oil.

Fig. 2

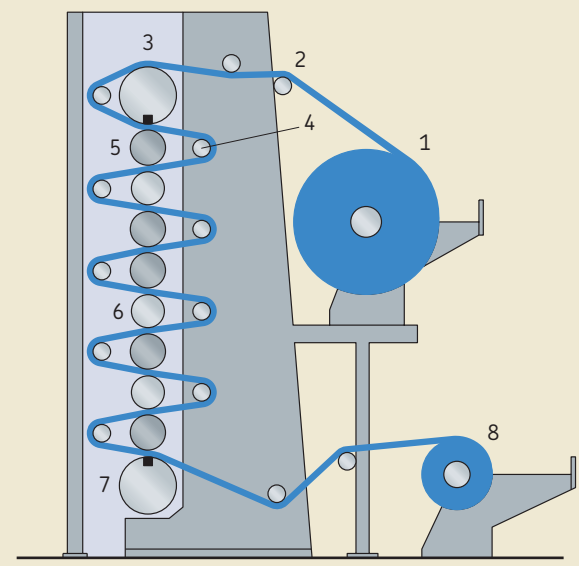

Supercalender
1 *Unwinding jumbo roll*
2 *Spreader roll*
3 *Top roll*
4 *Spreader roll*
5 *Fibre roll*
6 *Intermediate steel roll*
7 *Bottom roll*
8 *Winding jumbo roll*

Soft calenders

Another type of calendering process, called soft-nip calendering is common today. In some cases, the soft calender (→ **fig 3**) is being used to replace both the machine calender and the supercalender. The soft calender consists of one or two single-nip calenders with the linear load being roughly the same as for supercalenders. One roll is a full steel one while the other one is made of steel and coated with a layer of "soft" synthetic material. The main advantage with a "soft" press nip is that the density of the paper surface will be more even than with a "hard" press nip. This gives better printing properties.

As a further development of the soft calendering process, one of the rolls is heated. Hot water, steam or very hot oil (at temper-

Fig. 3

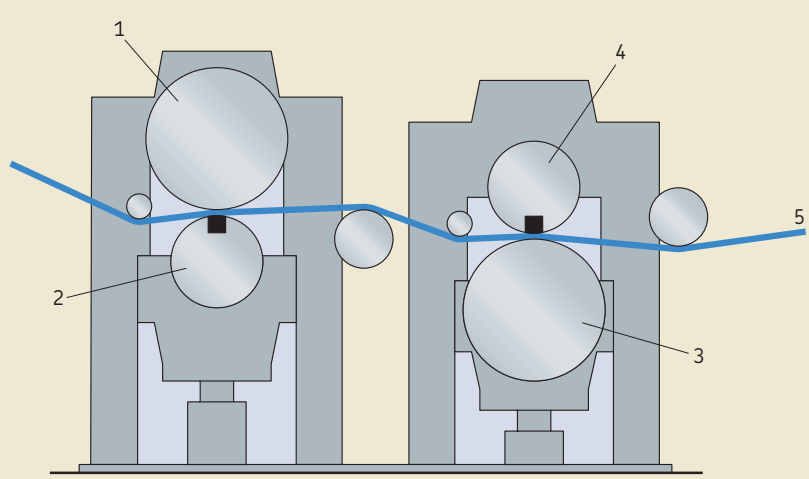

Two "soft" calenders in tandem for equal treatment of both sides of the paper
1, 3 *Heated plain roll*
2, 4 *Deflection-compensating press roll, "soft" coated*
5 *Paper web*

atures as high as 200–350 °C) is then supplied to the plain roll or to the deflection-compensating roll.

New calendering concept

There is a trend towards a multi-nip online calendering process for printing and writing paper grades. Voith Paper has their "Janus" calenders (→ **fig 4**) and Metso their "Optiload" concept. In both cases, every nip can be individually loaded.

Voith Paper Janus calender
1 *Nipco roll*
2 *Heating roll*
3 *Elastic roll*
4 *Reversing roll*
5 *Paper web*

Fig. 4

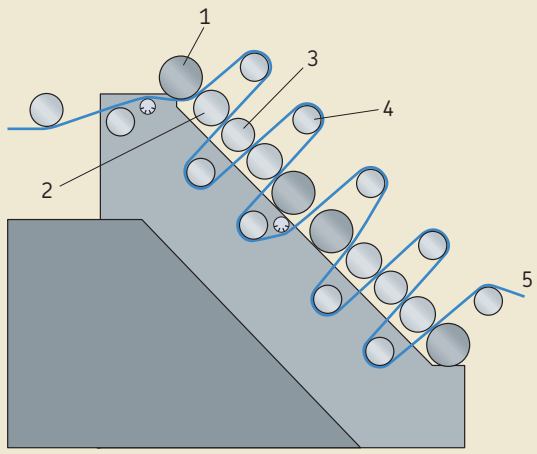

Bearing arrangements

Unheated plain calender rolls

The top, intermediate and queen rolls in a calender stack can be unheated. **Fig. 5** shows a basic design of the bearing housing and seals. The outer form of the housing and the fitting holes have to be made to suit the actual calender frame.

Traditionally, the bearings have been mounted on withdrawal sleeves but, owing to demands for improved running accuracy, direct mounting on tapered journals is increasingly common.

Bearing types

On the drive side, for the top, intermediate and queen rolls SKF recommends spherical roller bearings from series 230 and 231, while bearings from series 241 and 232 are used for the bottom rolls of plain type. On the front side, spherical roller bearings can also be used but CARB toroidal roller bearings are more suitable. Bearings from series C 30 and C 31 are recommended for the top, intermediate and queen rolls, whilst bearings from series C 41 and C 32 are used for the bottom rolls of plain type.

Bearings with C3 radial internal clearance should be selected.

For this bearing position, as well as all others with a nip, there is an increasing use of bearings that have improved running accuracy (C08 or VQ424). The need for these bearings increases with faster paper speeds. For very high speeds, VA460 bearings are recommended.

Selection of bearing size

The pressure in the roll contact is brought about by the mass of the rolls and the applied press load from the top roll. The top and bottom roll bearings have to carry the main load, while the bearings of the intermediate rolls are only lightly loaded. The recommended L_{10h} and L_{10ah} lives are 120 000 hours.

Bearing selection must always be based on proper calculations.

Lubrication

The lubrication recommendations are the same as those for plain press rolls in *chapter 3*, *Press section*, **page 11**.

See also the *examples 31* and *32* in *Chapter 8*, *Lubrication examples*, **pages 62–65**.

Bearing arrangement for unheated plain calender roll

Fig. 5

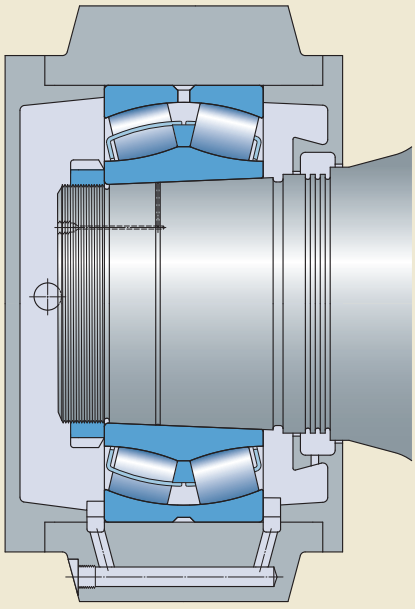

Journal and housing tolerances for unheated plain calender rolls

Journal	Mounting on a sleeve	h9 (IT5/2)
	Mounting on a tapered journal, see *chapter 1*, **pages 14–16**	
Housing	Bore diameter	
	up to 400 mm	G7
	above 400 mm	F7

See also *chapter 1*, *General requirements and recommendations*, *Tolerances*, **pages 14–16**

Heated plain calender rolls

The heating medium is normally supplied to the intermediate or the queen roll. **Fig. 6.** shows a suitable bearing arrangement with insulation for a heated roll. The outside form of the housing and the fitting holes have to be made to suit the actual calender frame.

SKF always recommends insulation of the journals of all kinds of heated rolls.

Bearing types

For the intermediate and queen rolls on the drive side in a calender, SKF recommends spherical roller bearings from series 230 and 231, whilst bearings from series 241 and 232 are used for the bottom rolls of plain type.

Spherical roller bearings can also be used on the front side, but CARB toroidal roller bearings are more suitable. For the intermediate and queen rolls, SKF recommends bearings from series C 30 or C 31, whilst bearings from series C 41 and C 32 are recommended for bottom rolls of plain type.

In modern high-speed two-roll soft calenders, the heated plain roll is in the top position of the first nip. This may lead to very light loads on the bearing. For such applications, SKF recommends use of spherical roller bearings from series 231 as the axially fixed bearing and CARB toroidal roller bearing from series C 31 as the free bearing. In cases of very light loads, SKF recommends NoWear bearings with coated rollers (L5DA) (→ **fig. 7, page 6**).

The bearings are mounted either on withdrawal sleeves or direct on tapered journals. For this bearing position, as well as all others with a nip, there is an increasing use of bearings having improved running accuracy (C08 or VQ424). The need for these bearings increases with faster paper speeds. For very high speeds, SKF recommends the VA460.

Depending on the operating temperature, if there is no journal insulation, bearings with case-hardened inner rings (HA3) may have to be selected. SKF should always be consulted where non-standard bearings are required.

The use of bearings with C3 or, when the temperature of the medium heating the roll is above 100 °C, C4 radial internal clearance is recommended.

Selection of bearing size

The pressure in the roll contact is brought about by the mass of the rolls and the applied press load from the top roll. The top and bottom roll bearings have to carry the main load, whilst the bearings of the intermediate rolls are only lightly loaded.

The bearing selection must always be based on proper calculations. The recommended L_{10h} and L_{10ah} lives are 120 000 hours.

Bearing arrangement for heated plain calender roll

Fig. 6

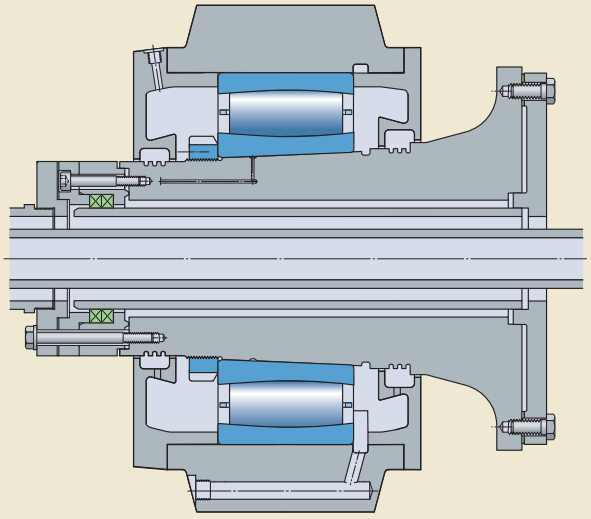

Journal and housing tolerances for heated plain calender rolls

Journal	Mounting on a sleeve	h9 (IT5/2)
	Mounting on a tapered journal, see *chapter 1*, **pages 14–16**	
Housing	Bore diameter	
	up to 400 mm	G7
	above 400 mm	F7

See also *chapter 1*, *General requirements and recommendations*, *Tolerances*, **pages 14–16**

Lubrication

The bearings in this particular application are lubricated by a circulating oil system in which the oil is supplied via the groove and holes in the outer ring of the spherical roller bearings or from the side for the CARB toroidal roller bearings.

Lubrication conditions such as oil viscosity, oil flow rate and bearing temperature, for heated calender rolls are calculated principally in the same way as for drying cylinders.

These calculations can be carried out by SKF using programs specially developed for heated calender rolls.

Sometimes upper roll bearings in soft calenders operate with loads less than the minimum load recommendations in the *SKF General Catalogue*. If so, NoWear bearings with coated rollers (L5DA) should be selected. Alternatively, approved polyglycol oils could be selected.

For further information, see *chapter 7*, *Lubrication* and *examples 33–35* in *chapter 8*, *Lubrication examples*, **pages 66–71**.

Fig. 7

CARB toroidal roller bearing in NoWear execution


MK2