rgab.ru Берг АБ bergab@ya.ru Тел. (495)-228-06-21, факс (495) 2

MOTION & CONTROL™
NSK

Precision Machine Components

NSK Linear Guides
Ball Screws
Monocarriers

rgab.ru Берг АБ bergab@ya.ru Тел. (495)-228-06-21, факс (495) 2

www.bergab.ru Берг АБ bergab@ya.ru Тел. (495)-228-06-21, факс (495) 223-3071

NSK New Product Series

2～89

A1 ～ A265

A. NSK Linear Rolling Guide Product

B1 ～ B553

B. Ball Screws

C1 ～ C77

C. Monocarrier™

D. Other

D1 ～ D23

E. Appendices and Product Index

E1 ～ E31

www.bergab.ru Берг АБ bergab@ya.ru Тел. (495)-228-06-21, факс (495) 223-3071

rgab.ru Берг АБ bergab@ya.ru Тел. (495)-228-06-21, факс (495) 2

MOTION & CONTROL

NSK

Precision Machine Components

NSK New Product Series

NSK Ball Screws for Standard stock
Compact FA Series 2

High-speed and Low-noise Ball Screw
BSS Series 18

High Dust-resistant Ball Screws
V1 Series 24

NSK Linear Guides™ Roller Guide RA Series 30

NSK Linear Guides™
Miniature PU Series/PE Series 46

NSK Linear Guides™
High-Accuracy Series 58

New Type of Rolling Element Linear Motion Bearing
Translide ™ 70

NSK Linear Guides™ for Contaminated Environments
V1 Series 76

rgab.ru Берг АБ bergab@ya.ru Тел. (495)-228-06-21, факс (495) 2

www.bergab.ru Берг АБ bergab@ya.ru Тел. (495)-228-06-21, факс (495) 223-3071

New Product Introduction
Table of Contents

1. NSK Ball Screws for Standard Compact FA Series · · · · · · 2

2. High-speed and Low-noise Ball Screw BSS Series · · 18

5. NSK Linear Guides™ Miniature PU Series/PE Series · · · · · · 46

6. NSK Linear Guides™ High-Accuracy Series · · · 58

3. High Dust-resistant Ball Screws V1 Series · · · · · · · · · · · · · 24

4. NSK Linear Guides™ Roller Guide RA Series · · · · · · · 30

7. New Type of Rolling Element Linear Motion Bearing Translide™ · · · · · · · · · · · · 70

8. NSK Linnear Guides™ for Contaminated Environments V1 Series · · · · · · · · · · · · · 76

www.bergab.ru Берг АБ bergab@ya.ru Тел. (495)-228-06-21, факс (495) 223-3071

www.bergab.ru Берг АБ bergab@ya.ru Тел. (495)-228-06-21, факс (495) 223-3071

MOTION & CONTROL™
NSK

NSK Ball Screws for Standard Stock

Compact FA Series

New!

Patent Pending

Next-generation compact ball screws offer quiet, high speed operating performance.
A standard stock series assures immediate delivery.

www.bergab.ru Берг АБ bergab@ya.ru Тел. (495)-228-06-21, факс (495) 223-3071

www.bergab.ru Берг АБ bergab@ya.ru Тел. (495)-228-06-21, факс (495) 223-3071

BSS Series next-generation compact ball screws offer quiet, high-speed performance, now available in standard stock.

BSS Series next-generation compact ball screws incorporate the new ball recirculation system and offer quiet, high-speed performance. In order to respond quickly to a wide range of needs, NSK keeps these ball screws in standard stock as the Compact FA Series. The exceptionally high performance ball screws are ready for use in a variety of fields such as semiconductor manufacturing equipment, LCD manufacturing equipment, chip mounting equipment, measuring apparatus, and medical equipment.

Comparison of conventional FA Series and Compact FA Series

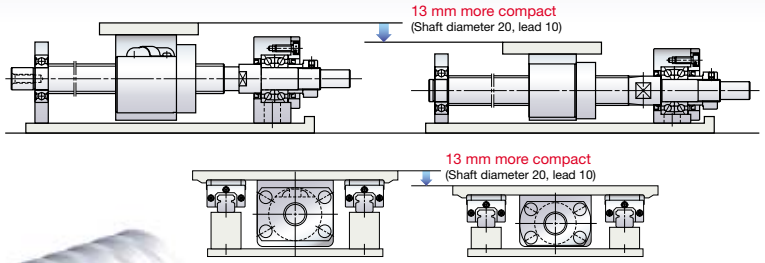

Features

6 dB less noise

The noise level of ball screws has been reduced by 6 dB, about half of what is sensed by the ear. Ball screws subsequently produce a quieter and gentler sound.

10%–30% more compact ball nut

The outside diameter of the ball nut is as much as 30% smaller than those of NSK conventional products. This contributes to more compact design of all sorts of equipment and devices such as thinner XY tables.

High-speed operation of up to 5 000 min^{-1}

The new ball screws offer 1.6 times faster rotational speed than conventional ball screws. They handle speeds up to 5 000 min^{-1}. This capability dramatically expands the range of service conditions. Note: Please refer to the dimension table for details of permissible rotational speed.

Grease fitting provided as standard equipment

The new ball screws are standardly equipped with a grease fitting (M5 × 0.8). Lubrication ports are provided in 2 places to facilitate maintenance. The ball screws can be easily connected to an integrated lubrication system.

New type of contact seal

A new model high-performance contact seal minimizes grease dispersion and helps to maintain a clean work environment.

Low-profile design

The low-profile support units especially compatible with the compact FA series are available for uniquely space-saving design.

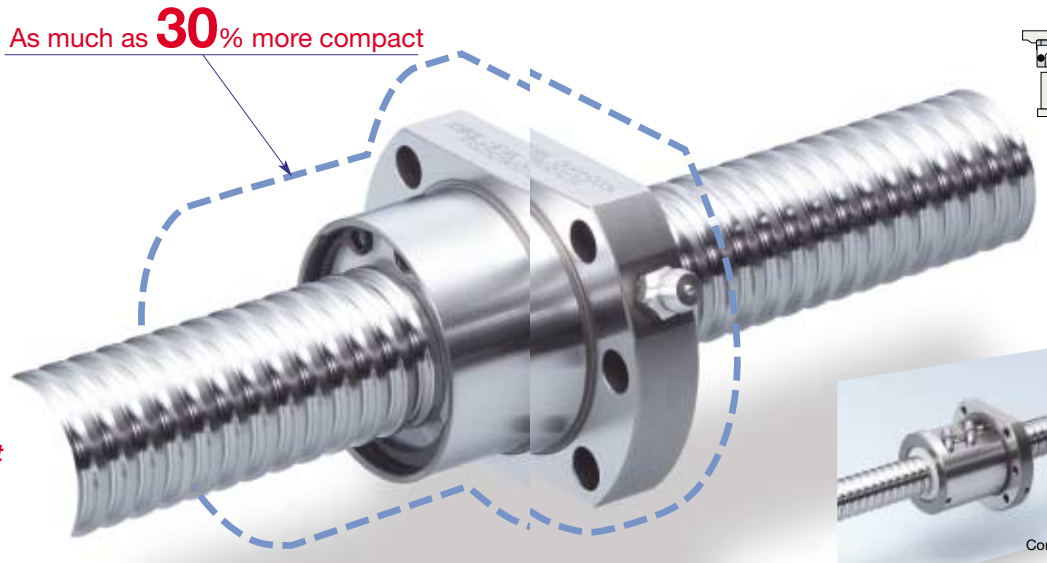

Compact & Silent

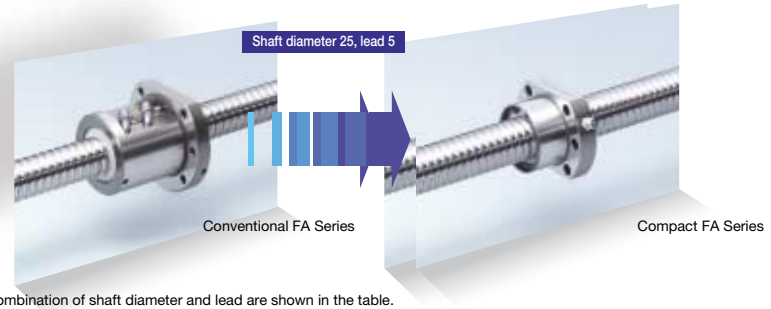

Specifications

- Accuracy grade: C5 class is available.
- Axial play: 0 (oversize ball preload)

Consult with NSK for information on surface treatment.

Existing support unit ⇒ New low-profile support unit

Example of reference number: **PSS 15 20 N1D 0561**

- PSS: Compact FA Series, Accuracy grade: C5
- 15: Screw shaft diameter (mm)
- 20: Lead (mm)
- N1D: NSK control No.
- 0561: Ball screw shaft length L_3 (mm)

Noise data

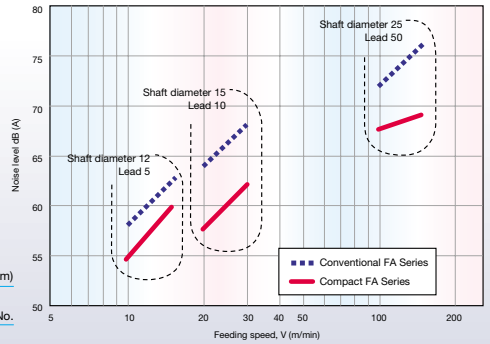

(Microphone was positioned at a distance of 400 mm for all noise measurements.)

Application: Combination of shaft diameter and lead are shown in the table.

Shaft diameter	Lead	Stroke														Recommended support unit	
		50	100	150	200	300	400	500	600	700	800	1 000	1 200	1 600	2 000	Fixed side support unit	Simple side support unit
10	5	●	●		●	●	●									WBK08-01B	WBK08S-01B
	10		●		●	●	●										
12	5	●	●		●	●	●	●								WBK08-01B	WBK08S-01B
	10		●		●	●	●	●									
	20		●		●	●	●	●									
	30		●		●	●	●	●									
15	5	●	●		●	●	●	●	●							WBK12-01B WBK10-01B	WBK12S-01B
	10		●		●	●	●	●	●	●	●	●					
	20		●		●	●	●	●	●	●	●	●					
	30		●		●	●	●	●	●	●	●	●					
20	5			●	●	●	●	●	●	●	●					WBK15-01B	WBK15S-01B
	10				●	●	●	●	●	●	●	●	●				
	20					●	●	●	●	●	●	●	●	●			
	30				●	●	●	●	●	●	●	●	●				
	40						●	●	●	●	●	●	●	●	●		
	60						●	●	●	●	●	●	●	●	●		
25	5			●	●	●	●	●		●	●	●				WBK20-01	WBK20S-01
	10					●	●	●	●	●	●	●		●			
	20							●	●	●	●	●	●	●	●		
	25							●	●	●	●	●	●	●	●		
	30							●	●	●	●	●	●	●	●		
	50							●	●	●	●	●	●	●	●		

Other support units are also available. See last page of catalog for details.

www.bergab.ru Берг АБ bergab@ya.ru Тел. (495)-228-06-21, факс (495) 223-3071

www.bergab.ru Берг АБ bergab@ya.ru Тел. (495)-228-06-21, факс (495) 223-3071

Screw shaft ϕ10

Lead 5, 10

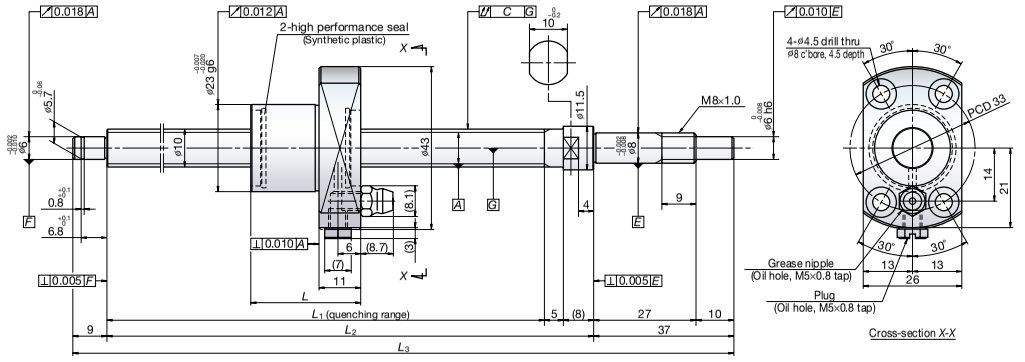

Ball screw specification

Preload type	Oversize ball preload (P-preload)
Ball diameter/screw shaft root diameter	2.000/8.2
Accuracy grade/axial play	C5/0
Factory pre-packed grease	NSK grease PS2

Recommended support unit

WBK08-01B	(square, fixed side)
WBK08S-01B	(square, simple side)
WBK08-11B	(round, fixed side)

Unit: mm

Reference number	Screw shaft diameter d	Lead ℓ	Basic load ratings (N) Dynamic C_a	Basic load ratings (N) Static C_{0a}	Stroke Nominal	Stroke Max. L_1-L	Nut length L	Screw shaft dimensions L_1	L_2	L_3	Lead accuracy Target value T	Error e_p	Variation υ_u	Shaft runout, C	Dynamic preload torque (N·cm) *1	Permissible rotational speed (min⁻¹) *2 Fixed-Simple
PSS1005N1D0171	10	5	2 930	4 790	50	83	29	112	125	171	0	0.020	0.018	0.030	0.7 – 3.3	5 000
PSS1005N1D0221					100	133		162	175	221		0.020	0.018	0.045	0.7 – 3.3	
PSS1005N1D0321					200	233		262	275	321		0.023	0.018	0.060	0.6 – 4.3	
PSS1005N1D0421					300	333		362	375	421		0.025	0.020	0.070	0.6 – 4.3	
PSS1005N1D0521					400	433		462	475	521		0.027	0.020	0.085	0.4 – 4.9	
PSS1010N1D0221		10	1 970	3 010	100	130	32	162	175	221		0.020	0.018	0.045	0.7 – 3.3	5 000
PSS1010N1D0321					200	230		262	275	321		0.023	0.018	0.060	0.6 – 4.3	
PSS1010N1D0421					300	330		362	375	421		0.025	0.020	0.070	0.6 – 4.3	
PSS1010N1D0521					400	430		462	475	521		0.027	0.020	0.085	0.4 – 4.9	

*1. Indicates ball screw preload control value. About 2.0 N·cm of torque is added due to high performance seal. *2. Contact NSK if permissible rotational speed is to be exceeded. *3. Service temperature range is -20℃ to 80℃.

Screw shaft ϕ12

Lead 5, 10, 20, 30

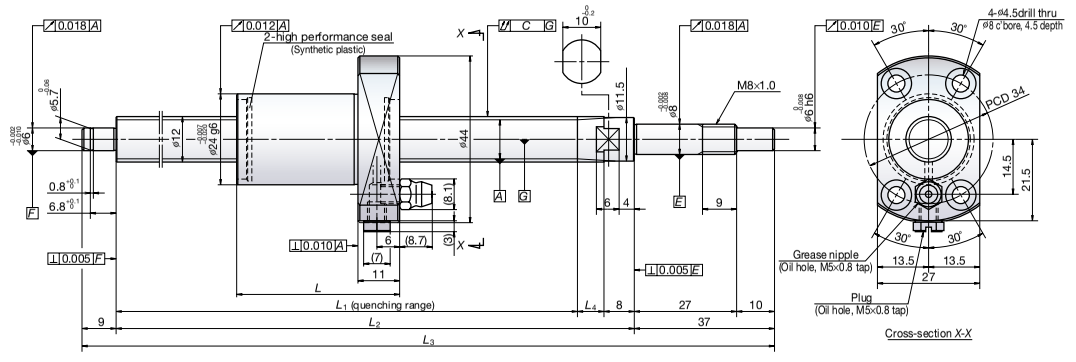

Ball screw specification

Preload type	Oversize ball preload (P-preload)
Ball diameter/screw shaft root diameter	2.000/10.2
Accuracy grade/axial play	C5/0
Factory pre-packed grease	NSK grease PS2

Recommended support unit

WBK08-01B	(square, fixed side)
WBK08S-01B	(square, simple side)
WBK08-11B	(round, fixed side)

Unit: mm

Reference number	Screw shaft diameter d	Lead ℓ	Basic load ratings (N) Dynamic C_a	Basic load ratings (N) Static C_{0a}	Stroke Nominal	Stroke Max. L_1-L	Nut length L	Screw shaft dimensions L_1	L_2	L_3	L_4	Lead accuracy Target value T	Error e_p	Variation υ_u	Shaft runout, C	Dynamic preload torque (N·cm) *1	Permissible rotational speed (min⁻¹) *2 Fixed-Simple
PSS1205N1D0171	12	5	3 200	5 860	50	80	30	110	125	171	7	0	0.020	0.018	0.030	0.7 – 3.3	5 000
PSS1205N1D0221					100	130		160	175	221			0.020	0.018	0.045	0.7 – 3.3	
PSS1205N1D0321					200	230		260	275	321			0.023	0.018	0.060	0.6 – 4.3	
PSS1205N1D0421					300	330		360	375	421			0.025	0.020	0.070	0.6 – 4.3	
PSS1205N1D0521					400	430		460	475	521			0.027	0.020	0.085	0.6 – 4.3	
PSS1205N1D0621					500	530		560	575	621			0.030	0.023	0.085	0.4 – 4.9	
PSS1210N1D0221		10	3 200	5 860	100	117	43	160	175	221	7		0.020	0.018	0.045	0.7 – 3.3	5 000
PSS1210N1D0321					200	217		260	275	321			0.023	0.018	0.060	0.6 – 4.3	
PSS1210N1D0421					300	317		360	375	421			0.025	0.020	0.070	0.6 – 4.3	
PSS1210N1D0521					400	417		460	475	521			0.027	0.020	0.085	0.6 – 4.3	
PSS1210N1D0621					500	517		560	575	621			0.030	0.023	0.085	0.4 – 4.9	
PSS1220N1D0271		20	2 150	3 610	100	158	50	208	225	271	9		0.023	0.018	0.045	1.4 – 4.5	5 000
PSS1220N1D0371					200	258		308	325	371			0.023	0.018	0.060	0.9 – 4.9	
PSS1220N1D0471					300	358		408	425	471			0.027	0.020	0.070	0.9 – 4.9	
PSS1220N1D0571					400	458		508	525	571			0.030	0.023	0.085	0.6 – 5.9	
PSS1220N1D0671					500	558		608	625	671			0.030	0.023	0.110	0.6 – 5.9	4 200
PSS1230N1D0271		30	2 150	3 610	100	133	70	203	225	271	14		0.023	0.018	0.045	1.4 – 4.5	5 000
PSS1230N1D0371					200	233		303	325	371			0.023	0.018	0.060	0.9 – 4.9	
PSS1230N1D0471					300	333		403	425	471			0.027	0.020	0.070	0.9 – 4.9	
PSS1230N1D0571					400	433		503	525	571			0.030	0.023	0.085	0.6 – 5.9	
PSS1230N1D0671					500	533		603	625	671			0.030	0.023	0.110	0.6 – 5.9	4 300

*1. Indicates ball screw preload control value. About 2.0 N·cm of torque is added due to high performance seal. *2. Contact NSK if permissible rotational speed is to be exceeded. *3. Service temperature range is -20℃ to 80℃.

NSK Ball Screws for standard applications www.bergab.ru Берг АБ bergab@ya.ru Тел. (495)-228-06-21, факс (495) 223-3071

www.bergab.ru Берг АБ bergab@ya.ru Тел. (495)-228-06-21, факс (495) 223-3071

Screw shaft ϕ15
Lead 5, 10

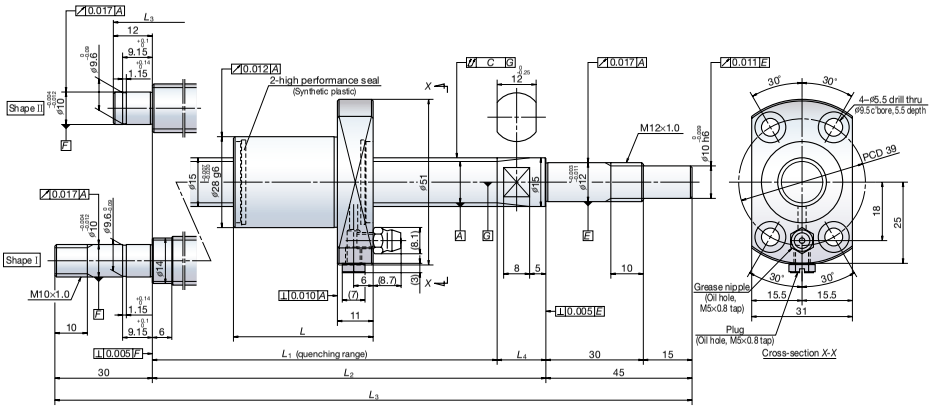

Ball screw specification

Preload type	Oversize ball preload (P-preload)
Ball diameter/screw shaft root diameter	2.7781/12.6
Accuracy grade/axial play	C5/0
Factory pre-packed grease	NSK grease LR3

Recommended support unit

WBK12-01B	(square, fixed side)
WBK12S-01B	(square, simple side)
WBK12-11	(round, fixed side)
*4 WBK10-01B	(square, fixed side)
WBK10-11	(round, fixed side)

Unit: mm

Reference number	Screw shaft diameter d	Lead ℓ	Basic load ratings (N) Dynamic C_a	Static C_{0a}	Stroke Nominal	Max. L_1-L	Nut length L	Screw shaft dimensions L_1	L_2	L_3	L_4	Lead accuracy Target value T	Error e_p	Variation υ_u	Shaft runout C	Dynamic preload torque (N·cm) *1	Permissible rotational speed (min⁻¹) *2 Fixed-Simple	Fixed-Fixed	Left shaft end (opposite driven side)
PSS1505N1D0211	15	5	5 460	10 200	50	109	30	139	154	211	15	0	0.020	0.018	0.035	0.2 – 6.9	5 000	–	Shape II
PSS1505N1D0261					100	159		189	204	261			0.020	0.018	0.035	0.2 – 6.9			
PSS1505N1D0361					200	259		289	304	361			0.023	0.018	0.045	0.2 – 6.9			
PSS1505N1D0461					300	359		389	404	461			0.025	0.020	0.050	0.4 – 9.8			
PSS1505N1D0561					400	459		489	504	561			0.027	0.020	0.060	0.4 – 9.8			
PSS1505N1D0661					500	559		589	604	661			0.030	0.023	0.075	0.4 – 9.8			
PSS1505N1D0761					600	659		689	704	761			0.035	0.025	0.075	0.4 – 11.8	3 600		
PSS1510N1D0261		10	5 460	10 200	100	146	43	189	204	261	15		0.020	0.018	0.035	0.6 – 7.4	5 000	–	Shape II
PSS1510N1D0361					200	246		289	304	361			0.023	0.018	0.045	0.6 – 7.4			
PSS1510N1D0461					300	346		389	404	461			0.025	0.020	0.050	0.4 – 9.8			
PSS1510N1D0561					400	446		489	504	561			0.027	0.020	0.060	0.4 – 9.8			
PSS1510N1D0661					500	546		589	604	661			0.030	0.023	0.075	0.4 – 9.8			
PSS1510N1D0761					600	646		689	704	761			0.035	0.025	0.075	0.4 – 11.8	3 600		
PSS1510N1D0879					700	746		789	804	879			0.035	0.025	0.095	0.4 – 11.8	2 700	3 400	Shape I
PSS1510N1D0979					800	846		889	904	979			0.040	0.027	0.095	0.4 – 11.8	2 200	3 400	
PSS1510N1D1179					1 000	1 046		1 089	1 104	1 179			0.046	0.030	0.120	0.4 – 11.8	1 400	2 300	

*1. Indicates ball screw preload control value. About 2.0 N·cm of torque is added due to high performance seal. *2. Contact NSK if permissible rotational speed is to be exceeded. *3. Service temperature range is -20℃ to 80℃. *4. WBK 10-01B and WBK 10-11 are for shape I.

Screw shaft ϕ15
Lead 20, 30

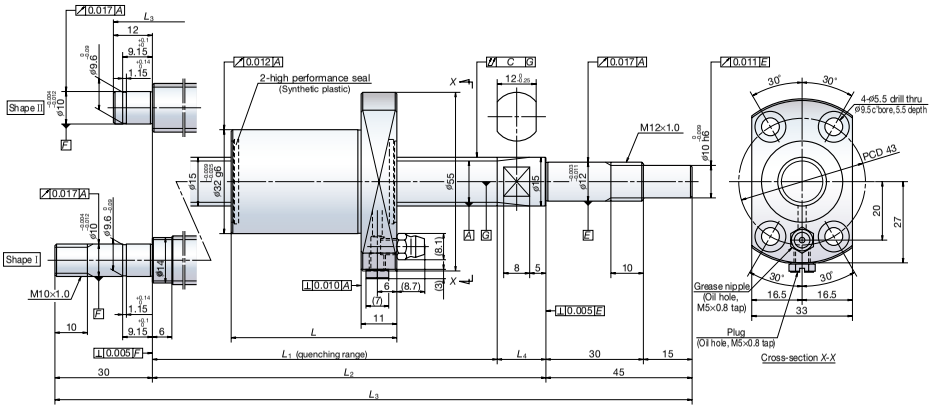

Ball screw specification

Preload type	Oversize ball preload (P-preload)
Ball diameter/screw shaft root diameter	3.175/12.2
Accuracy grade/axial play	C5/0
Factory pre-packed grease	NSK grease LR3

Recommended support unit

WBK12-01B	(square, fixed side)
WBK12S-01B	(square, simple side)
WBK12-11	(round, fixed side)
*4 WBK10-01B	(square, fixed side)
WBK10-11	(round, fixed side)

Unit: mm

Reference number	Screw shaft diameter d	Lead ℓ	Basic load ratings (N) Dynamic C_a	Static C_{0a}	Stroke Nominal	Max. L_1-L	Nut length L	Screw shaft dimensions L_1	L_2	L_3	L_4	Lead accuracy Target value T	Error e_p	Variation υ_u	Shaft runout C	Dynamic preload torque (N·cm) *1	Permissible rotational speed (min⁻¹) *2 Fixed-Simple	Fixed-Fixed	Left shaft end (opposite driven side)
PSS1520N1D0261	15	20	5 070	8 730	100	135	51	186	204	261	18	0	0.020	0.018	0.035	0.8 – 8.8	5 000	–	Shape II
PSS1520N1D0361					200	235		286	304	361			0.023	0.018	0.045	0.8 – 8.8			
PSS1520N1D0461					300	335		386	404	461			0.025	0.020	0.050	0.8 – 10.8			
PSS1520N1D0561					400	435		486	504	561			0.027	0.020	0.060	0.8 – 10.8			
PSS1520N1D0661					500	535		586	604	661			0.030	0.023	0.075	0.8 – 10.8			
PSS1520N1D0761					600	635		686	704	761			0.035	0.025	0.075	0.8 – 13.8	3 700		
PSS1520N1D0879					700	735		786	804	879			0.035	0.025	0.095	0.8 – 13.8	2 900	4 200	Shape I
PSS1520N1D0979					800	835		886	904	979			0.040	0.027	0.095	0.8 – 13.8	2 200	3 300	
PSS1520N1D1179					1 000	1 035		1 086	1 104	1 179			0.046	0.030	0.120	0.8 – 13.8	1 500	2 200	
PSS1530N1D0311		30	5 070	8 730	100	159	71	230	254	311	24		0.023	0.018	0.035	1.2 – 9.3	5 000	–	Shape II
PSS1530N1D0411					200	259		330	354	411			0.025	0.020	0.050	0.8 – 10.8			
PSS1530N1D0511					300	359		430	454	511			0.027	0.020	0.060	0.8 – 10.8			
PSS1530N1D0611					400	459		530	554	611			0.030	0.023	0.060	0.8 – 10.8			
PSS1530N1D0711					500	559		630	654	711			0.030	0.023	0.075	0.8 – 13.8	4 500		
PSS1530N1D0811					600	659		730	754	811			0.035	0.025	0.095	0.8 – 13.8	3 300		
PSS1530N1D0929					700	759		830	854	929			0.040	0.027	0.095	0.8 – 13.8	2 600	3 800	Shape I
PSS1530N1D1029					800	859		930	954	1 029			0.040	0.027	0.120	0.8 – 13.8	2 000	3 000	
PSS1530N1D1229					1 000	1 059		1 130	1 154	1 229			0.046	0.030	0.120	0.8 – 13.8	1 400	2 000	

*1. Indicates ball screw preload control value. About 2.0 N·cm of torque is added due to high performance seal. *2. Contact NSK if permissible rotational speed is to be exceeded. *3. Service temperature range is -20℃ to 80℃. *4. WBK 10-01B and WBK 10-11 are for shape I.

www.bergab.ru Берг АБ bergab@ya.ru Тел. (495)-228-06-21, факс (495) 223-3071

Screw shaft ϕ20
Lead 5, 10, 20, 30, 40, 60

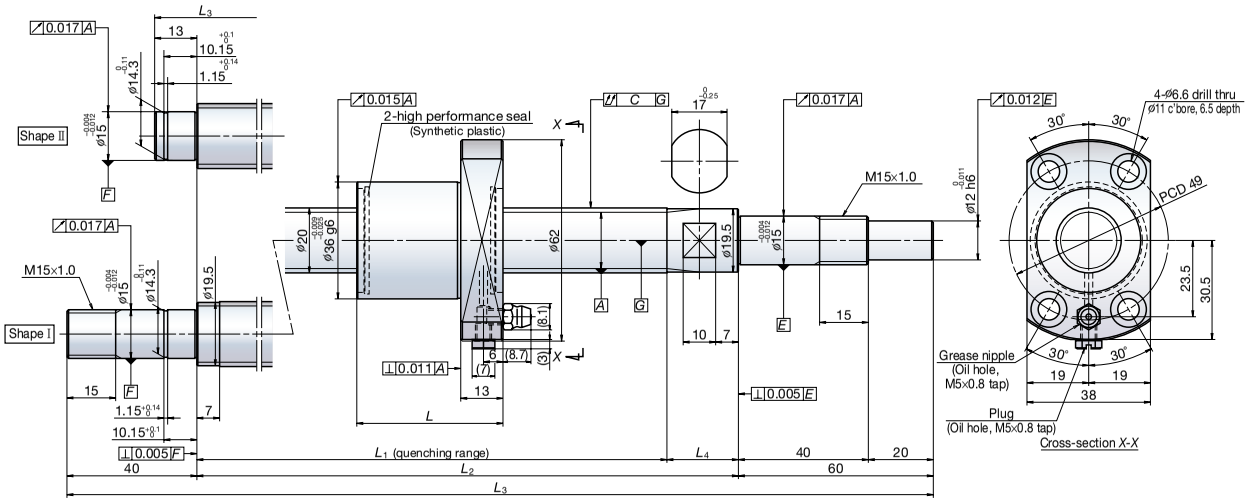

Ball screw specification

Preload type	Oversize ball preload (P-preload)
Ball diameter/screw shaft root diameter	3.175/17.2
Accuracy grade/axial play	C5/0
Factory pre-packed grease	NSK grease LR3

Recommended support unit

WBK15-01B	(square, fixed side)
WBK15S-01B	(square, simple side)
WBK15-11	(round, fixed side)

Unit: mm

Reference number	Screw shaft diameter d	Lead ℓ	Basic load ratings (N) Dynamic C_a	Basic load ratings (N) Static C_{0a}	Stroke Nominal	Stroke Max. L_1-L	Nut length L	Screw shaft dimensions L_1	L_2	L_3	L_4	Lead accuracy Target value T	Error e_p	Variation ν_u	Shaft runout C	Dynamic preload torque (N·cm) *1	Permissible rotational speed (min⁻¹) *2 Fixed-Simple	Fixed-Fixed	Left shaft end (opposite driven side)
PSS2005N1D0323	20	5	8 790	18 500	150	197	31	228	250	323	22	0	0.023	0.018	0.045	0.6 – 7.4	5 000	–	Shape II
PSS2005N1D0373					200	247		278	300	373			0.023	0.018	0.045	0.6 – 7.4			
PSS2005N1D0473					300	347		378	400	473			0.025	0.020	0.050	0.6 – 7.4			
PSS2005N1D0573					400	447		478	500	573			0.027	0.020	0.060	0.4 – 9.8			
PSS2005N1D0673					500	547		578	600	673			0.030	0.023	0.075	0.4 – 9.8			
PSS2005N1D0773					600	647		678	700	773			0.035	0.025	0.075	0.4 – 9.8			
PSS2005N1D0873					700	747		778	800	873			0.035	0.025	0.095	0.4 – 9.8	4 000		
PSS2005N1D1000					800	847		878	900	1000			0.040	0.027	0.095	0.4 – 11.8	3 200	4 700	Shape I
PSS2010N1D0387		10	8 790	18 500	200	247	45	292	314	387	22		0.023	0.018	0.045	1.2 – 9.3	5 000	–	Shape II
PSS2010N1D0487					300	347		392	414	487			0.025	0.020	0.050	1.2 – 9.3			
PSS2010N1D0587					400	447		492	514	587			0.027	0.020	0.060	0.8 – 10.8			
PSS2010N1D0687					500	547		592	614	687			0.030	0.023	0.075	0.8 – 10.8			
PSS2010N1D0787					600	647		692	714	787			0.035	0.025	0.075	0.8 – 10.8			
PSS2010N1D0887					700	747		792	814	887			0.035	0.025	0.095	0.8 – 10.8	4 000		
PSS2010N1D1014					800	847		892	914	1 014			0.040	0.027	0.120	0.8 – 13.8	3 100	4 600	Shape I
PSS2010N1D1214					1 000	1047		1 092	1 114	1 214			0.046	0.030	0.120	0.8 – 13.8	2 100	3 100	
PSS2010N1D1414					1 200	1247		1 292	1 314	1 414			0.054	0.035	0.160	0.8 – 13.8	1 500	2 200	
PSS2020N1D0508		20	5 900	11 700	300	359	54	413	435	508	22		0.027	0.020	0.060	1.4 – 11.8	5 000	–	Shape II
PSS2020N1D0608					400	459		513	535	608			0.030	0.023	0.060	1.4 – 11.8			
PSS2020N1D0708					500	559		613	635	708			0.030	0.023	0.075	1.4 – 11.8			
PSS2020N1D0808					600	659		713	735	808			0.035	0.025	0.095	1.4 – 11.8			
PSS2020N1D0908					700	759		813	835	908			0.040	0.027	0.095	0.8 – 13.8	3 700		
PSS2020N1D1035					800	859		913	935	1 035			0.040	0.027	0.120	0.8 – 13.8	3 000	4 500	Shape I
PSS2020N1D1235					1 000	1 059		1 113	1 135	1 235			0.046	0.030	0.120	0.8 – 13.8	2 000	3 000	
PSS2020N1D1435					1 200	1 259		1 313	1 335	1 435			0.054	0.035	0.160	0.8 – 13.8	1 400	2 100	
PSS2020N1D1835					1 600	1 659		1 713	1 735	1 835			0.065	0.040	0.200	0.8 – 13.8	800	1 200	
PSS2030N1D0408		30	5 900	11 700	200	234	74	308	335	408	27		0.023	0.018	0.050	1.6 – 9.8	5 000	–	Shape II
PSS2030N1D0508					300	334		408	435	508			0.027	0.020	0.060	1.4 – 11.8			
PSS2030N1D0608					400	434		508	535	608			0.030	0.023	0.060	1.4 – 11.8			
PSS2030N1D0708					500	534		608	635	708			0.030	0.023	0.075	1.4 – 11.8			
PSS2030N1D0808					600	634		708	735	808			0.035	0.025	0.095	1.4 – 11.8			
PSS2030N1D0908					700	734		808	835	908			0.040	0.027	0.095	0.8 – 13.8	3 900		
PSS2030N1D1035					800	834		908	935	1 035			0.040	0.027	0.120	0.8 – 13.8	3 100	4 600	Shape I
PSS2030N1D1235					1 000	1 034		1 108	1 135	1 235			0.046	0.030	0.120	0.8 – 13.8	2 100	3 000	
PSS2030N1D1435					1 200	1 234		1 308	1 335	1 435			0.054	0.035	0.160	0.8 – 13.8	1 500	2 200	
PSS2040N1D0658		40	5 900	11 700	400	461	92	553	585	658	32		0.030	0.023	0.075	2.2 – 12.8	5 000	–	Shape II
PSS2040N1D0758					500	561		653	685	758			0.035	0.025	0.075	2.2 – 12.8			
PSS2040N1D0858					600	661		753	785	858			0.035	0.025	0.095	2.2 – 12.8			
PSS2040N1D0958					700	761		853	885	958			0.040	0.027	0.095	1.8 – 14.8	3 500		
PSS2040N1D1085					800	861		953	985	1 085			0.040	0.027	0.120	1.8 – 14.8	2 800	4 200	Shape I
PSS2040N1D1285					1 000	1 061		1 153	1 185	1 285			0.046	0.030	0.160	1.8 – 14.8	1 900	2 800	
PSS2040N1D1485					1 200	1 261		1 353	1 385	1 485			0.054	0.035	0.160	1.8 – 14.8	1 400	2 000	
PSS2040N1D1885					1 600	1 661		1 753	1 785	1 885			0.065	0.040	0.200	1.8 – 14.8	800	1 200	
PSS2040N1D2285					2 000	2 061		2 153	2 185	2 285			0.077	0.046	0.240	1.8 – 14.8	500	800	
PSS2060N1D0708		60	5 900	11 700	400	464	129	593	635	708	42		0.030	0.023	0.075	2.7 – 13.8	5 000	–	Shape II
PSS2060N1D0808					500	564		693	735	808			0.035	0.025	0.095	2.7 – 13.8			
PSS2060N1D0908					600	664		793	835	908			0.035	0.025	0.095	2.7 – 13.8	4 200		
PSS2060N1D1008					700	764		893	935	1 008			0.040	0.027	0.120	1.8 – 14.8	3 300		
PSS2060N1D1135					800	864		993	1 035	1 135			0.040	0.027	0.120	1.8 – 14.8	2 600	3 900	Shape I
PSS2060N1D1335					1 000	1 064		1 193	1 235	1 335			0.046	0.030	0.160	1.8 – 14.8	1 800	2 700	
PSS2060N1D1535					1 200	1 264		1 393	1 435	1 535			0.054	0.035	0.160	1.8 – 14.8	1 300	1 900	
PSS2060N1D1935					1 600	1 664		1 793	1 835	1 935			0.065	0.040	0.200	1.8 – 14.8	800	1 100	
PSS2060N1D2335					2 000	2 064		2 193	2 235	2 335			0.077	0.046	0.240	1.8 – 14.8	500	700	

*1. Indicates ball screw preload control value. About 3.0 N·cm of torque is added due to high performance seal. *2. Contact NSK if permissible rotational speed is to be exceeded. *3. Service temperature range is -20°C to 80°C.

www.bergab.ru Берг АБ bergab@ya.ru Тел. (495)-228-06-21, факс (495) 223-3071

Screw shaft ϕ25
Lead 5, 10, 20, 25, 30, 50

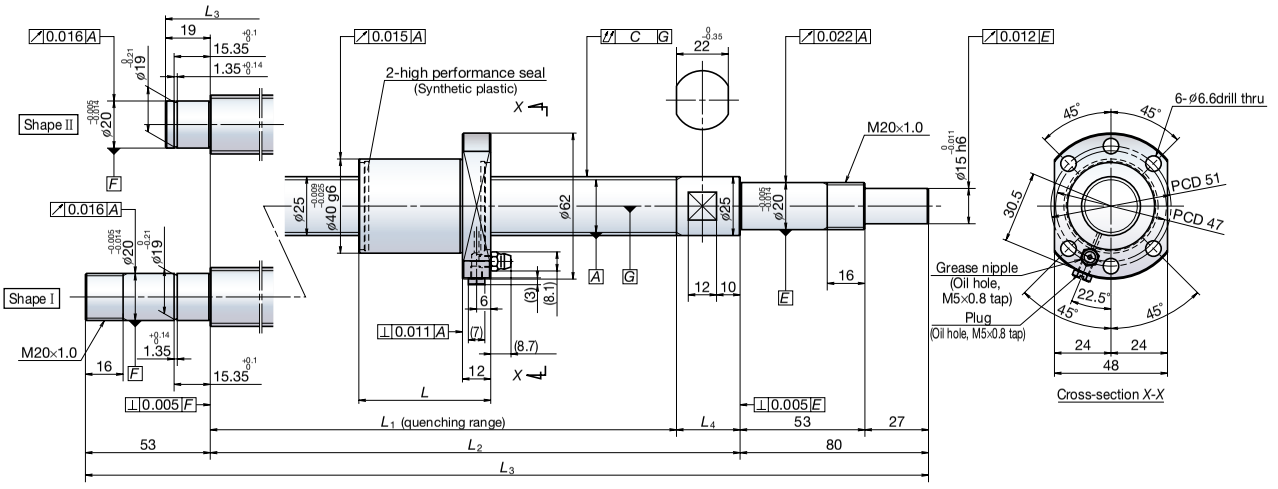

Ball screw specification

Preload type	Oversize ball preload (P-preload)
Ball diameter/screw shaft root diameter	3.175/22.2
Accuracy grade/axial play	C5/0
Factory pre-packed grease	NSK grease LR3

Recommended support unit

WBK20-01	(square, fixed side)
WBK20S-01	(square, simple side)
WBK20-11	(round, fixed side)

Unit: mm

Reference number	Screw shaft diameter d	Lead ℓ	Basic load ratings (N) Dynamic C_a	Basic load ratings (N) Static C_{0a}	Stroke Nominal	Stroke Max. L_1-L	Nut length L	Screw shaft dimensions L_1	L_2	L_3	L_4	Lead accuracy Target value T	Error e_p	Variation υ_u	Shaft runout C	Dynamic preload torque (N·cm) *1	Permissible rotational speed (min⁻¹) *2 Fixed-Simple	Fixed-Fixed	Left shaft end (opposite driven side)
PSS2505N1D0349	25	5	9 760	23 600	150	191	32	223	250	349	27	0	0.023	0.018	0.035	1.2 – 9.3	5 000	–	Shape II
PSS2505N1D0399					200	241		273	300	399			0.023	0.018	0.035	1.2 – 9.3			
PSS2505N1D0499					300	341		373	400	499			0.025	0.020	0.040	1.2 – 9.3			
PSS2505N1D0599					400	441		473	500	599			0.027	0.020	0.045	1.2 – 9.3			
PSS2505N1D0699					500	541		573	600	699			0.030	0.023	0.055	0.8 – 10.8			
PSS2505N1D0899					700	741		773	800	899			0.035	0.025	0.065	0.8 – 10.8			
PSS2505N1D0999					800	841		873	900	999			0.040	0.027	0.065	0.8 – 10.8	4 100		
PSS2505N1D1233					1 000	1 041		1 073	1 100	1 233			0.046	0.030	0.080	0.8 – 13.8	2 700	4 000	Shape I
PSS2510N1D0549		10	12 800	32 300	300	367	56	423	450	549	27		0.027	0.020	0.045	3.1 – 11.8	5 000	–	Shape II
PSS2510N1D0649					400	467		523	550	649			0.030	0.023	0.055	2.2 – 12.8			
PSS2510N1D0749					500	567		623	650	749			0.030	0.023	0.055	2.2 – 12.8			
PSS2510N1D0849					600	667		723	750	849			0.035	0.025	0.065	2.2 – 12.8			
PSS2510N1D0949					700	767		823	850	949			0.040	0.027	0.065	2.2 – 12.8			
PSS2510N1D1049					800	867		923	950	1 049			0.040	0.027	0.080	2.2 – 12.8	3 600		
PSS2510N1D1283					1 000	1 067		1 123	1 150	1 283			0.046	0.030	0.100	1.8 – 14.8	2 500	3 700	Shape I
PSS2510N1D1883					1 600	1 667		1 723	1 750	1 883			0.065	0.040	0.130	1.8 – 14.8	1 000	1 600	
PSS2520N1D0729		20	6 560	14 600	500	550	54	604	630	729	26		0.030	0.023	0.055	2.2 – 12.8	5 000	–	Shape II
PSS2520N1D0829					600	650		704	730	829			0.035	0.025	0.065	2.2 – 12.8			
PSS2520N1D0929					700	750		804	830	929			0.040	0.027	0.065	2.2 – 12.8	4 800		
PSS2520N1D1029					800	850		904	930	1 029			0.040	0.027	0.080	2.2 – 12.8	3 800		
PSS2520N1D1263					1 000	1 050		1 104	1 130	1 263			0.046	0.030	0.100	1.8 – 14.8	2 600	3 800	Shape I
PSS2520N1D1463					1 200	1 250		1 304	1 330	1 463			0.054	0.035	0.100	1.8 – 14.8	1 800	2 700	
PSS2520N1D1863					1 600	1 650		1 704	1 730	1 863			0.065	0.040	0.130	1.8 – 14.8	1 100	1 600	
PSS2520N1D2263					2 000	2 050		2 104	2 130	2 263			0.077	0.046	0.170	1.8 – 14.8	700	1 000	
PSS2525N1D0779		25	6 560	14 600	500	587	63	650	680	779	30		0.035	0.025	0.055	2.7 – 13.8	5 000	–	Shape II
PSS2525N1D0879					600	687		750	780	879			0.035	0.025	0.065	2.7 – 13.8			
PSS2525N1D0979					700	787		850	880	979			0.040	0.027	0.065	2.7 – 13.8	4 300		
PSS2525N1D1079					800	887		950	980	1 079			0.040	0.027	0.080	2.7 – 13.8	3 400		
PSS2525N1D1313					1 000	1 087		1 150	1 180	1 313			0.046	0.030	0.100	1.8 – 14.8	2 300	3 500	Shape I
PSS2525N1D1513					1 200	1 287		1 350	1 380	1 513			0.054	0.035	0.100	1.8 – 14.8	1 700	2 600	
PSS2525N1D1913					1 600	1 687		1 750	1 780	1 913			0.065	0.040	0.130	1.8 – 14.8	1 000	1 500	
PSS2525N1D2313					2 000	2 087		2 150	2 180	2 313			0.077	0.046	0.170	1.8 – 14.8	700	1 000	
PSS2530N1D0779		30	6 560	14 600	500	576	74	650	680	779	30		0.035	0.025	0.055	2.7 – 13.8	5 000	–	Shape II
PSS2530N1D0879					600	676		750	780	879			0.035	0.025	0.065	2.7 – 13.8			
PSS2530N1D0979					700	776		850	880	979			0.040	0.027	0.065	2.7 – 13.8	4 300		
PSS2530N1D1079					800	876		950	980	1 079			0.040	0.027	0.080	2.7 – 13.8	3 400		
PSS2530N1D1313					1 000	1 076		1 150	1 180	1 313			0.046	0.030	0.100	1.8 – 14.8	2 300	3 600	Shape I
PSS2530N1D1513					1 200	1 276		1 350	1 380	1 513			0.054	0.035	0.100	1.8 – 14.8	1 700	2 600	
PSS2530N1D1913					1 600	1 676		1 750	1 780	1 913			0.065	0.040	0.130	1.8 – 14.8	1 000	1 500	
PSS2530N1D2313					2 000	2 076		2 150	2 180	2 313			0.077	0.046	0.170	1.8 – 14.8	700	1 000	
PSS2550N1D0829		50	6 560	14 600	500	576	114	690	730	829	40		0.035	0.025	0.065	5.4 – 17.6	5 000	–	Shape II
PSS2550N1D0929					600	676		790	830	929			0.035	0.025	0.065	5.4 – 17.6	4 800		
PSS2550N1D1029					700	776		890	930	1 029			0.040	0.027	0.080	5.4 – 17.6	3 800		
PSS2550N1D1129					800	876		990	1 030	1 129			0.040	0.027	0.080	5.4 – 17.6	3 100		
PSS2550N1D1363					1 000	1 076		1 190	1 230	1 363			0.046	0.030	0.100	4.1 – 19.6	2 200	3 400	Shape I
PSS2550N1D1563					1 200	1 276		1 390	1 430	1 563			0.054	0.035	0.100	4.1 – 19.6	1 600	2 500	
PSS2550N1D1963					1 600	1 676		1 790	1 830	1 963			0.065	0.040	0.130	4.1 – 19.6	900	1 500	
PSS2550N1D2363					2 000	2 076		2 190	2 230	2 363			0.077	0.046	0.170	4.1 – 19.6	600	1 000	

*1. Indicates ball screw preload control value. About 3.0 N·cm of torque is added due to high performance seal. *2. Contact NSK if permissible rotational speed is to be exceeded. *3. Service temperature range is -20℃ to 80℃.

www.bergab.ru Берг АБ bergab@ya.ru Тел. (495)-228-06-21, факс (495) 223-3071

Precautions

◇ Design

(1) If a ball screw of which left shaft end (opposite driven side) is the shape I, and is supported with the "fixed-fixed" supporting method, you should be aware that the operating life of support bearings may drop due to thermal expansion of the screw shaft, depending on usage conditions. In this case, you should consider a structure that can absorb thermal expansion of the screw shaft if necessary. Please consult with NSK for a detailed examination.

(2) If using an NSK linear guide, the maximum speed of a linear guide of standard specifications under ordinary conditions is limited to 100 m/min. A linear guide with high-speed specifications is available if higher operating speed is required. Contact NSK for further information.

(3) For general precautions concerning ball screws, please see NSK Catalog No. E3161 "Precision Machine Components."

◇ Usage and handling

Ball screws are precision products and should be treated as follows:

[Lubrication]

(1) Compact FA Series ball screws are packed and coated with lubrication grease at the factory, and require no further lubrication under ordinary circumstances. If the surface of the grease becomes contaminated with dirt and metal powder under operation, clean it with white kerosene and replenish with new grease of the same kind through the oil hole (grease nipple) on the ball nut. Avoid mixing different types of grease.

(2) Lubricant should be checked after the first 2 to 3 months of operation. If excessively dirty, we recommend you wipe away the old grease and replenish with a generous quantity of grease. After that, grease should be checked and replenished once a year under ordinary circumstances, but the period may vary depending upon the service environment.

[Handling]

(1) Never disassemble the ball screw, otherwise dirt may contaminate the inside of the unit and affect precision or result in equipment failure.

(2) Compact FA Series ball screws incorporate a new ball re-circulation system. Consequently, only NSK authorized plants should conduct disassembly and reassembly. If the nut accidentally comes off the screw shaft or is dropped, NSK will check precision, problems or perform repairs at your expense.

(3) When the ball screw is erected upright, the screw shaft or nut could fall by force of its own weight and result in injury. If dropped, the ball grooves could be dented or re-circulation parts damaged, resulting in loss of function. This would require the ball screw to be inspected by NSK. If so, be sure to send the ball screw to NSK and we will check it for a fee.

[Usage]

(1) Ball screws should be used in a clean environment. The ball screws should be provided with a dust cover to prevent the entry of debris such as dust and metal powder. If foreign matter is allowed to contaminate the ball screw, this could not only cause the ball screw to lose some of its function, but also result in clogging and damaging the re-circulation system parts, or cause the table to fall or a similar serious accident.

(2) Compact FA Series ball screws are designed to be used in a service temperature environment of 80°C or lower. Do not allow the service temperature limit to be exceeded. In some cases, using ball screws in temperatures above 80°C might lead to damage of re-circulation system parts or seal parts. Contact NSK if 80°C must be exceeded.

◇ Compact FA Series options

Consult with NSK for information about optional specification not given in the catalog such as shaft end machining, reverse direction ball nut, alternative grease, surface treatment, and alternative preload.

Low-profile Support Units for Compact FA Series

NSK has developed a series of low-profile support unit to be used with the ball screws of compact FA series. A combination of the ball screw and the support unit offers a compact design for downsizing of many kinds of machinery.

Features

The low-profile support units offer the low center height construction suited for the compact FA series ball screws.

Product configuration

All parts required for ball screw mounting are provided as a set (see the table below). The bearing housing of support unit for fixed side contains a built-in angular contact ball bearings and oil seal and should not be disassembled.

Fixed side support unit

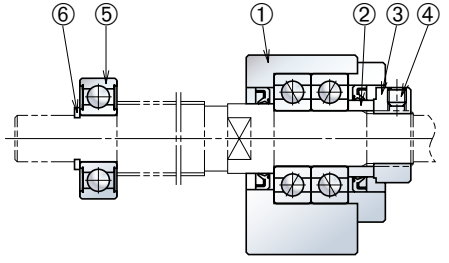

Part No.	Part	Remarks (surface treatment, grease)
①	Bearing housing	Triiron tetroxide film
	Angular contact ball bearing,	PS2
	Oil seal	
	Cover	Triiron tetroxide film
②	Spacer	
③	Lock nut	Triiron tetroxide film
④	Setscrew	Triiron tetroxide film
	Set piece (pad)	
⑤	Deep groove ball bearing	Comes with support side, PS2
⑥	Snap ring	Triiron tetroxide film

Other machine screws are either made of stainless steel or coated with triiron tetroxide film.

Simple side support unit

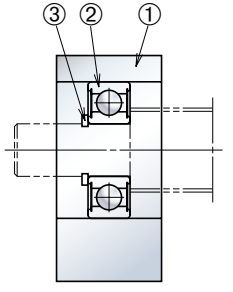

Part No.	Part	Remarks (surface treatment, grease)
①	Bearing housing	Triiron tetroxide film
②	Deep groove ball bearing	PS2
③	Snap ring	Triiron tetroxide film

Reference number

Example: **WBK 08 S - 01 B**

- WBK: Support unit product code
- 08: Nominal size code (internal bore of bearing)*
- S: Mounting code — No code: Fixed side support unit; S: Simple side support unit
- 01: 01: Square type, 11: Round type
- B: No code or A: conventional standard support unit; B: Low-profile support unit

*For simple side support units, please note that size codes of 12 or less do not represent internal bores of bearing.

www.bergab.ru Берг АБ bergab@ya.ru Тел. (495)-228-06-21, факс (495) 223-3071

www.bergab.ru Берг АБ bergab@ya.ru Тел. (495)-228-06-21, факс (495) 223-3071

Fixed side support unit (square type)

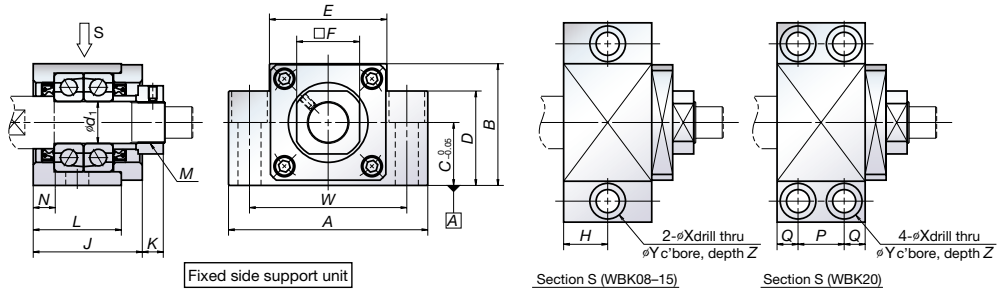

Unit: mm

Screw shaft diameter	Fixed side support unit (square type)																			
	Reference number	d_1	A	B	C	D	E	F	H	J	K	L	N	P	Q	W	X	Y	Z	M
ø10	WBK08-01A	8	52	32	17	26	25	14	11.5	23	7	—	4	—	—	38	6.6	11	12	M8×1
ø12	WBK08-01B	8	62	31	15.5	—	—	14	11	25.5	4.5	21.5	3.5	—	—	46	9	14	18	M8×1
ø15	WBK10-01B*	10	70	38	20	—	—	17	12	30	5.5	24	6	—	—	52	9	14	19	M10×1
	WBK12-01A	12	70	43	25	35	36	19	12	30	5.5	24	6	—	—	52	9	14	11	M12×1
	WBK12-01B	12	70	38	20	—	—	19	12	30	5.5	24	6	—	—	52	9	14	19	M12×1
ø20	WBK15-01A	15	80	50	30	40	41	22	12.5	31	12	25	5	—	—	60	11	17	15	M15×1
	WBK15-01B	15	80	42	22	—	—	22	12.5	31	12	25	5	—	—	60	11	17	23	M15×1
ø25	WBK20-01	20	95	58	30	45	56	30	—	52	10	42	10	22	10	75	11	17	15	M20×1

*Use support unit for fixing side for opposite drive side of shaft diameter ø15.

Remarks 1. Mount to the base using side A as the reference.
2. Tighten the setscrew after tightening the lock nut and adjusting.
3. Insert the set piece and then tighten the setscrew.

Fixed side support unit (round type)

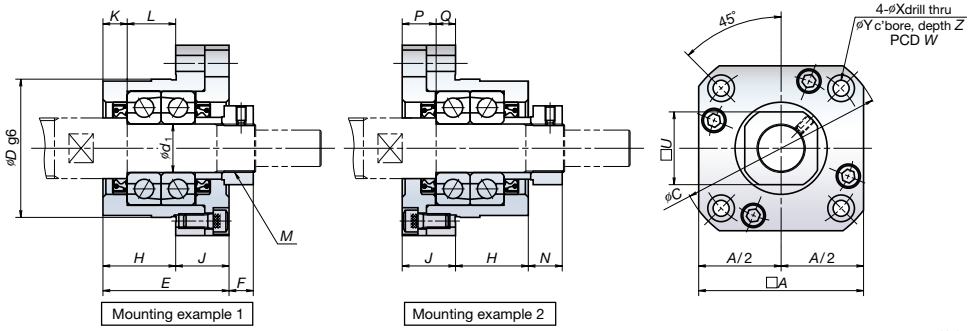

Unit: mm

Screw shaft diameter	Fixed side support unit (round type)																			
	Reference number	d_1	A	C	D	E	F	H	J	K	L	N	P	Q	U	W	X	Y	Z	M
ø10	WBK08-11	8	35	43	28	23	7	14	9	4	10	8	5	4	14	35	3.4	6.5	4	M8×1
ø12	WBK08-11B	8	42	52	34	25.5	4.5	15.5	10	3.5	12	7	6	4	14	42	4.5	8	4	M8×1
ø15	WBK10-11*	10	42	52	34	27	7.5	17	10	5	12	8.5	6	4	17	42	4.5	8	4	M10×1
	WBK12-11	12	44	54	36	27	7.5	17	10	5	12	8.5	6	4	19	44	4.5	8	4	M12×1
ø20	WBK15-11	15	52	63	40	32	12	17	15	6	11	14	8	7	22	50	5.5	9.5	6	M15×1
ø25	WBK20-11	20	68	85	57	52	10	30	22	10	20	14	14	8	30	70	6.6	11	10	M15×1

*Use support unit for fixing side for opposite drive side of shaft diameter ø15.

Remarks 1. Tighten the setscrew after tightening the lock nut and adjusting.
2. Insert the set piece and then tighten the setscrew.

Simple side support unit

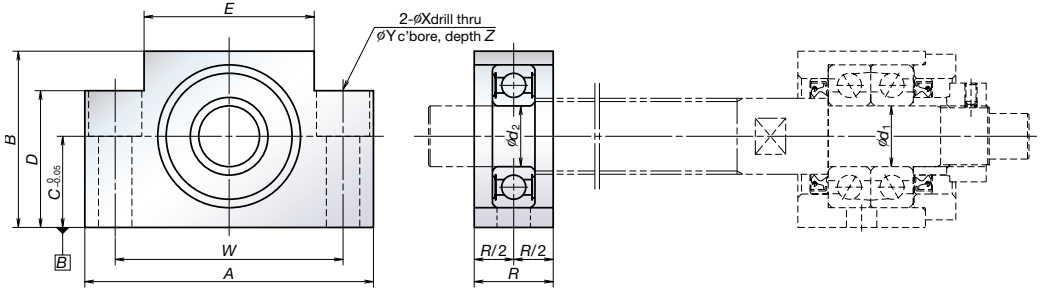

Simple side support unit

Unit: mm

Screw shaft diameter	Simple side support unit											
	Reference number	d_2	A	B	C	D	E	R	W	X	Y	Z
ø10	WBK08S-01	6	52	32	17	26	25	15	38	6.6	11	12
ø12	WBK08S-01B	6	62	31	15.5	—	—	16	46	9	14	18
ø15	WBK12S-01	10	70	43	25	35	36	20	52	9	14	11
	WBK12S-01B	10	70	38	20	—	—	20	52	9	14	19
ø20	WBK15S-01	15	80	50	30	40	41	20	60	9	14	11
	WBK15S-01B	15	80	42	22	—	—	20	60	9	14	23
ø25	WBK20S-01	20	95	58	30	45	56	26	75	11	17	15

Remarks 1. Mount to the base using side B as the reference.

Specifications of support unit

Screw shaft diameter	Fixed side support unit							Simple side support unit		
	Support unit reference number	Axial load		Maximum starting torque [N·cm]	Tightening torque [N·cm]			Support unit reference number	Bearing number	Radial load
		Basic load ratings C_a [N]	Load limit [N]		Lock nut	Setscrew				Basic load ratings C [N]
ø10	WBK08-01A (square type)	4 400	1 450	0.88	490	69 (M3)		WBK08S-01	606ZZ	2 260
ø12	WBK08-11 (round type)							—		
	WBK08-01B (square low-profile type)	6 600	2 730	1.9				WBK08S-01B		
	WBK08-11B (round type)							—		
ø15	WBK10-01B (square low-profile type)*	6 600	2 730	1.9	930	147 (M4)		—	6000ZZ	4 550
	WBK10-11 (round type)							—		
	WBK12-01A (square type)	7 100	3 040	2.1	1 370	147 (M4)		WBK12S-01		
	WBK12-01B (square low-profile type)							WBK12S-01B		
	WBK12-11 (round type)							—		
ø20	WBK15-01A (square type)	7 600	3 380	2.3	2 350	147 (M4)		WBK15S-01	6002ZZ	5 600
	WBK15-01B (square low-profile type)							WBK15S-01B		
	WBK15-11 (round type)							—		
ø25	WBK20-01 (square type)	17 900	8 240	5.4	4 700	147 (M4)		WBK20S-01	6204ZZ	12 800
	WBK20-11 (round type)							—		

*Use support unit for fixing side for opposite drive side of shaft diameter ø15.

www.bergab.ru Берг АБ bergab@ya.ru Тел. (495)-228-06-21, факс (495) 223-3071

www.bergab.ru Берг АБ bergab@ya.ru Тел. (495)-228-06-21, факс (495) 223-3071

MOTION & CONTROL™
NSK

High-speed and Low-noise Ball Screws

BSS Series

Patent Pending

Quiet and compact, with unparalleled high speed performance. Reduced-noise BSS Series ball screws for an extensive range of uses, from machine tools to transportation equipment.

New development New!

www.bergab.ru Берг АБ bergab@ya.ru Тел. (495)-228-06-21, факс (495) 223-3071

www.bergab.ru Берг АБ bergab@ya.ru Тел. (495)-228-06-21, факс (495) 223-3071

BSS Series—Next-generation ball screws with quiet, high-speed performance in a compact size, the result of joining NSK's advanced technology with an innovative recirculation method

A new series has joined the NSK ball screws lineup that delivers unrivaled precision. Developed with the advanced technology NSK has gained over years of earning customer trust with proven performance, this series represents a groundbreaking achievement in reduced noise and high-speed operation in an amazingly compact size. The quiet performance is especially appreciated in machine tools, medical equipment, semiconductor-manufacturing equipment, LCD manufacturing equipment, and chip mounting equipment.

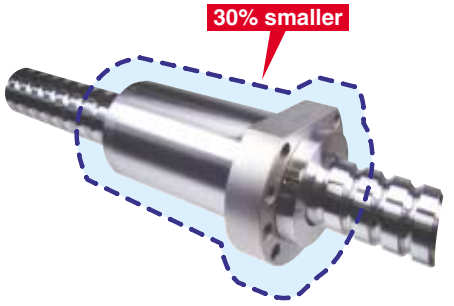

Features

Quieter by 6 dB; nearly silent in typical applications

The average noise level is reduced by more than 6 dB compared with our conventional products. At low-speed rotation, the ball screws are nearly silent, while the lowest noise level is achieved at high-speed rotation*.

*Noise level measured with a microphone at a distance of 400 mm.

High-speed operation of up to 220,000 dN

Realizes high-speed operation at a maximum of dN 220,000—outstanding for ball screws and far surpassing the 135,000 dN maximum performance of conventional return tube type products. For high lead ball screws, high-speed operation at over 200m/min is also possible.

30% smaller

The external diameter of the ball nut is 30% smaller than our conventional models. Compact configurations are possible for low-profile XY tables as well as for other devices and equipment.

Grease fitting provided as standard equipment

The ball screws with shaft diameters of less than ϕ25 are standardly equipped with a grease fitting (M5 × 0.8). Lubrication ports are provided in 2 places to facilitate maintenance. The ball screws can be easily connected to an integrated lubrication system.

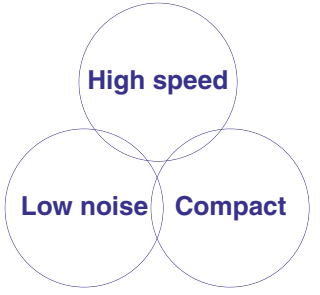

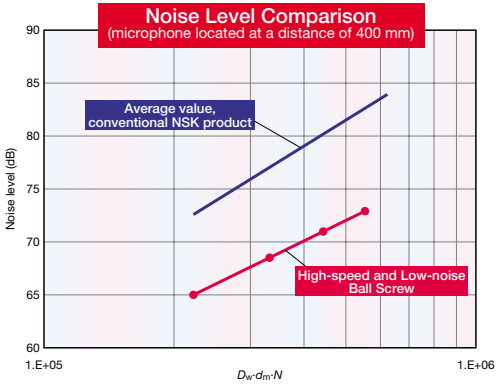

Application

Combinations of shaft diameter and lead of the high-speed and low-noise ball screws are shown in the table.

Shaft diameter	Lead													
	5	10	12	16	20	25	30	32	40	50	60	64	80	100
10	●	●												
12	●	●			●		●							
15	●	●			●		●							
20	●	●			●		●		●		●			
25	●	●			●	●	●			●				
32	●	●	●	●	●			●				●		
36	●	●	●	●	●									
40		●	●	●	●	●	●		●				●	
45		●	●	●	●	●	●							
50		●	●	●	●	●	●			●				●

Specifications

Recirculation method

A new internal ball recirculation method is applied for simpler, more compact ball nuts.

Preload and axial play

Adopts oversized ball preload, suitable for compact devices. Axial play can be selected from less than or equal to 0.005 mm (code T), 0.020 mm (code S), or 0.050 mm (code N). For more information, please see the general catalog of precision machine components.

Sealing

Adopts a new compact design high performance sealing.
Minimal grease scattering contributes to maintenance of a clean environment.

Options

- Optional NSK K1™ lubrication unit, molded from resin and impregnated with lubrication oil, supplies fresh oil onto ball rolling surfaces, ensuring long-term, maintenance-free usage. Please contact NSK when using NSK K1.
- Please contact NSK about hollow shaft ball screws that are compatible with the forced cooling of the shaft center, which are effective for stabilizing positioning accuracy and shortening the warm-up period.

www.bergab.ru Берг АБ bergab@ya.ru Тел. (495)-228-06-21, факс (495) 223-3071

www.bergab.ru Берг АБ bergab@ya.ru Тел. (495)-228-06-21, факс (495) 223-3071

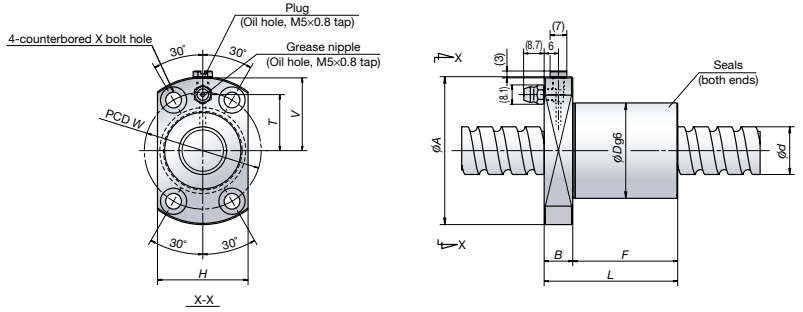

Type Ⅰ Flange

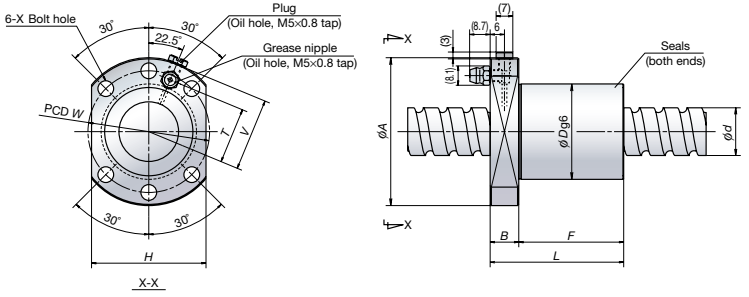

Type Ⅱ Flange

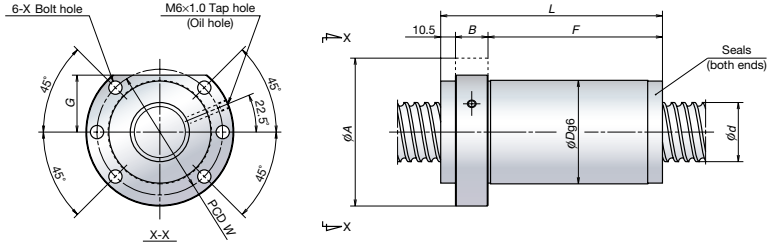

Type Ⅲ Flange

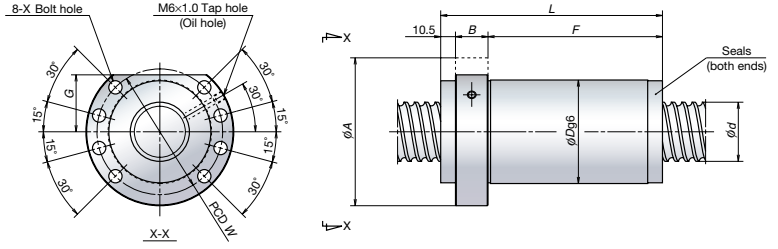

Type Ⅳ Flange

Model No.	Screw shaft diameter *d* (mm)	Lead ℓ (mm)	Effective turns of balls	Basic load rating Dynamic C_a(N)	Basic load rating Static C_{oa}(N)	Axial rigidity (N/μm)	Ball nut dimensions (mm) *D*	*A*	*L*	*B*	*F*	*H*×*V*	TYPE	*W*	*X*	*T*
BSS1005-3E	10	5	3	2 930	4 790	126	23	43	29	11	18	26×21	Ⅰ	33	M4	14
BSS1010-2E		10	2	1 970	3 010	77			32		21					
BSS1205-3E	12	5	3	3 200	5 860	146	24	44	30	11	19	27×21.5	Ⅰ	34	M4	14.5
BSS1210-3E		10	3	3 200	5 860	142			43		32					
BSS1220-2E		20	2	2 150	3 610	83			50		39					
BSS1230-2E		30	2	2 150	3 610	75			70		59					
BSS1505-3E	15	5	3	5 460	10 200	183	28	51	30	11	19	31×25	Ⅰ	39	M5	18
BSS1510-3E		10	3	5 460	10 200	181			43		32					
BSS1520-2E		20	2	5 070	8 730	127	32	55	51		40	33×27		43		20
BSS1530-2E		30	2	5 070	8 730	116			71		60					
BSS2005-3E	20	5	3	8 790	18 500	268	36	62	31	13	18	38×30.5	Ⅰ	49	M6	23.5
BSS2010-3E		10	3	8 790	18 500	268			45		32					
BSS2020-2E		20	2	5 900	11 700	167			54		41					
BSS2030-2E		30	2	5 900	11 700	159			74		61					
BSS2040-2E		40	2	5 900	11 700	147			92		79					
BSS2060-2E		60	2	5 900	11 700	128			129		116					
BSS2505-3E	25	5	3	9 760	23 600	325	40	62	32	12	20	48×30.5	Ⅱ	51	M6	23.5
BSS2510-4E		10	4	12 800	32 300	437			56		44					
BSS2520-2E		20	2	6 560	14 600	203			54		42					
BSS2525-2E		25	2	6 560	14 600	197			63		51					
BSS2530-2E		30	2	6 560	14 600	194			74		62					
BSS2550-2E		50	2	6 560	14 600	177			114		102					

Note: Rigidity values in this table are theoretical values derived from elastic displacement between screw grooves and balls when axial load is applied to a ball nut for which preload is set at 3% of the basic dynamic load rating (C_a).
The shape and dimension of ball screws with shaft diameters less than ϕ25 are the same as NSK ball screws held in standard stock as the Compact FA Series.

Model No.	Screw shaft diameter *d* (mm)	Lead ℓ (mm)	Effective turns of balls	Basic load rating Dynamic C_a(N)	Basic load rating Static C_{oa}(N)	Axial rigidity (N/μm)	Ball nut dimensions (mm) *D*	*A*	*L*	*B*	*F*	*G*	TYPE	*W*	*X*
BSS3205-5E	32	5	5	17 500	52 900	672	56	86	60	12	37.5	34	Ⅲ	71	M8
BSS3210-6E		10	6	43 300	111 000	865			104	18	75.5				
BSS3212-5E		12	5	36 700	90 800	716			103		74.5				
BSS3216-5E		16	5	36 700	90 800	716			122		93.5				
BSS3220-5E		20	5	36 700	90 800	708			141		112.5				
BSS3232-2E		32	2	15 300	32 400	261			94		65.5				
BSS3264-2E		64	2	15 300	32 400	232			153		124.5				
BSS3605-5E	36	5	5	18 400	59 500	740	65	95	60	12	37.5	36	Ⅳ	80	M8
BSS3610-6E		10	6	55 200	142 000	970			109	22	76.5				
BSS3612-6E		12	6	55 200	142 000	967			120		87.5				
BSS3616-6E		16	6	55 200	142 000	961			143		110.5				
BSS3620-6E		20	6	55 200	142 000	959			166		133.5				
BSS4010-6E	40	10	6	58 200	158 000	1 060	70	100	109	22	76.5	38.5	Ⅳ	85	M8
BSS4012-6E		12	6	58 200	158 000	1 050			120		87.5				
BSS4016-6E		16	6	58 200	158 000	1 050			143		110.5				
BSS4020-6E		20	6	58 200	158 000	1 050			166		133.5				
BSS4025-4E		25	4	40 100	103 000	686			145		112.5				
BSS4030-3E		30	3	30 600	74 000	505			134		101.5				
BSS4040-2E		40	2	20 600	46 600	319			110		77.5				
BSS4080-2E		80	2	20 600	46 600	286			184		151.5				
BSS4510-6E	45	10	6	60 700	178 000	1 160	75	110	109	22	76.5	43	Ⅳ	93	M10
BSS4512-6E		12	6	60 700	178 000	1 160			120		87.5				
BSS4516-6E		16	6	60 700	178 000	1 160			143		110.5				
BSS4520-6E		20	6	60 700	178 000	1 150			166		133.5				
BSS4525-5E		25	5	51 400	146 000	954			170		137.5				
BSS4530-4E		30	4	41 800	116 000	752			164		131.5				
BSS5010-6E	50	10	6	64 600	198 000	1 270	82	118	109	22	76.5	46	Ⅳ	100	M10
BSS5012-6E		12	6	64 600	198 000	1 270			120		87.5				
BSS5016-6E		16	6	64 600	198 000	1 270			143		110.5				
BSS5020-6E		20	6	64 600	198 000	1 260			166		133.5				
BSS5025-5E		25	5	54 700	164 000	1 040			170		137.5				
BSS5030-5E		30	5	54 700	164 000	1 040			194		161.5				
BSS5050-2E		50	2	22 800	58 300	383			130		97.5				
BSS50100-2E		100	2	22 800	58 300	342			224		191.5				

Note: Rigidity values in this table are theoretical values derived from elastic displacement between screw grooves and balls when axial load is applied to a ball nut for which preload is set at 3% of the basic dynamic load rating (C_a).

www.bergab.ru Берг АБ bergab@ya.ru Тел. (495)-228-06-21, факс (495) 223-3071

www.bergab.ru Берг АБ bergab@ya.ru Тел. (495)-228-06-21, факс (495) 223-3071

MOTION & CONTROL™
NSK

High Dust-resistant Ball Screws

V1 Series

New!

Patent Pending

NSK's advanced, high performance seal delivers more than four times longer service life under contaminated environments than existing products.

www.bergab.ru Берг АБ bergab@ya.ru Тел. (495)-228-06-21, факс (495) 223-3071

www.bergab.ru Берг АБ bergab@ya.ru Тел. (495)-228-06-21, факс (495) 223-3071

High Dust-resistant Ball Screws V1 Series

With dramatically improved sealing performance, the V1 series delivers outstanding functionality and long operating life under contaminated environments.
A wide range of options enables users to select the ideal choice for specific application needs, from processing machinery to large-sized tables and conveyors.

Applications
Laser cutting machines, Tire buffing machines
Woodworking machines, Chip mounter
Precision transporting equipments,
Positioning units, Robots, Welding lines, and others

Features

High dust-resistance

Reduces particle penetration rate to less than 1/15

Specially profiled screw shaft grooves and high performance seals prevent the entry of fine contaminants. Reduces particle penetration rate to less than 1/15 of existing standard products.

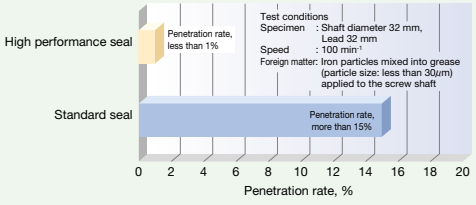

Fig. 1 Particle penetration rate

Before passage through high performance seal — After passage through high performance seal

All contaminants adhering to the screw shaft are swept away after passage through high performance seals.

Contamination before and after particle penetration test

Long life

More than four times longer service life under contaminated environments

High performance seals extend ball screw durability under severely contaminated environments with iron powder.
Extreme durability tests under contaminated environments show the durability of the V1 series extends more than four times longer than our existing series with a standard seal.

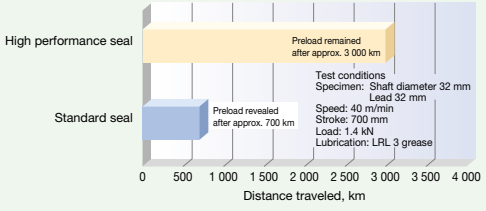

Fig. 2 Extreme durability test results using iron particles

High speed

High-speed operation up to 150 000 d·n

For ultimate smoothness of ball recirculation, the internal ball recirculation method enables high-speed operation at a maximum of d·n 150 000. Large lead specifications allow high-speeds of 150 m/min.

Note: Critical speed due to resonance of the screw shaft should be examined for individual strokes. To determine critical speed, refer to the NSK General Catalog of Precision Machine Components (CAT No. E3161).

Low-noise

Quieter by 6 dB

Reduces noise level by more than 6 dB compared with our conventional tube-type ball screws, thereby providing low-noise and good noise tone features.

Compact size

25% smaller diameter saves space

Ball nut external diameter is up to 25% smaller than our conventional models, making possible compact configurations for low-profile XY tables as well as for other devices and equipment.

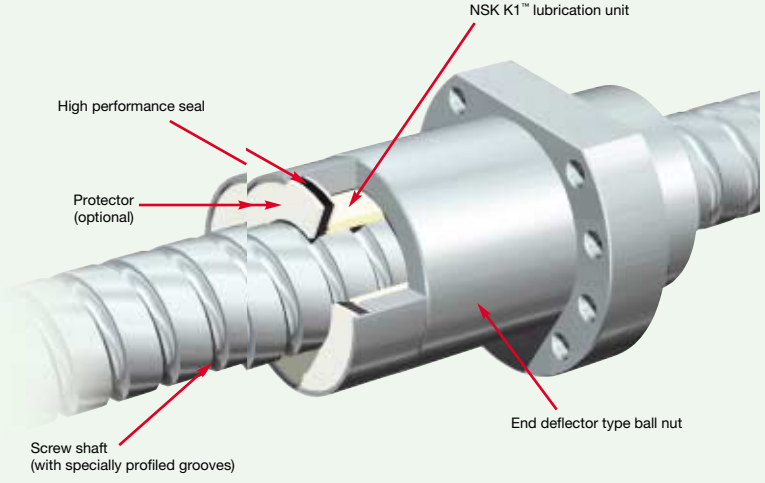

Specifications

1. High performance seal

High performance seal (Japan patents: 3646452, 3692203) with special lip that contacts screw shaft cross-section and prevents entry of fine contaminants.

2. NSK K1™ lubrication unit

Incorporates NSK K1™ lubrication unit to sufficiently lubricate the high performance seal lip, reduce friction, and improve durability.

3. Recirculation method

Adopts end deflector recirculation method instead of conventional ball recirculation method using a return tube; deflector mounted inside the nut smoothly scoops up balls in their moving direction.

4. Accuracy

JIS C5 lead accuracy is available as standard.
For additional information about accuracy, please contact NSK.

5. Preload and axial play

- Preloading ··· Adopts oversized ball preload, suitable for compact devices.
- Axial play ··· Axial play can be selected from less than or equal to 0 (code Z), 0.005 mm (code T), or 0.02 mm (code S).

6. Screw shaft design

Ball screw shaft diameter on either shaft end should be less than or equal to root diameter (d_r in Table 1).

7. Protector (optional)

Non-contact metal protector that traces the ball screw grooves and safeguards the seal against high-temperature foreign matter.

Handling Precautions

Observe the following precautions to maintain the long-term efficiency of these high performance seals:

1. Permissible temperature range ···Maximum operating temperature: 50 ˚C
   Maximum momentary operating temperature: 80 ˚C
   Note: High performance seals may increase torque, which may in turn increase temperature. Please consult with NSK prior to usage under severe service conditions.
2. Chemical precautions ···Never expose the ball screw to grease-removing organic solvents such as hexane or thinner. Never immerse the ball screw in kerosene or rust preventive oils which contain kerosene.

www.bergab.ru Берг АБ bergab@ya.ru Тел. (495)-228-06-21, факс (495) 223-3071

www.bergab.ru Берг АБ bergab@ya.ru Тел. (495)-228-06-21, факс (495) 223-3071

V1 Series Dimensions

Specification number

Specification numbers may be used as a guide for customers and NSK prior to finalizing specifications. It is used when requesting estimates or inquiring about specifications. Please provide a drawing to specify shaft end profile.

Example: **VSS 32 16 - C5 Z 850 / 1234**

- VSS (High dust-resistant ball screws V1 series)
- Screw shaft diameter (mm): 32, 40, 50
- Lead (mm): 10, 16, 20, 32, 40, 50
- Accuracy grade code (C5)
- Axial play code (Z, T, S)
- Screw length (mm)
- Total screw shaft length (mm)

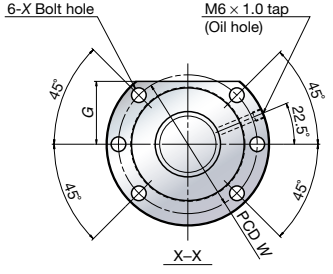

Type I Flange

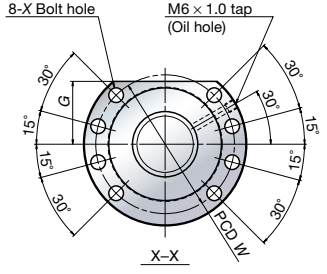

Type II Flange

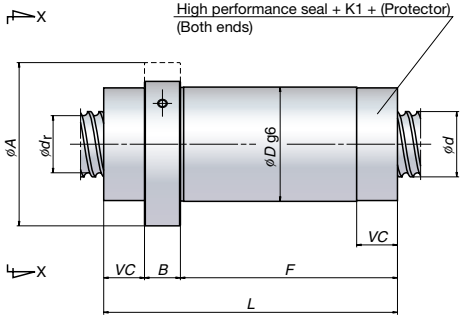

Table 1 Dimensions

Model No.	Screw shaft diameter d (mm)	Lead (mm)	Root diameter d_r (mm)	Effective turns of balls
VSS3210-6E	32	10	27.2	6
VSS3216-5E		16		5
VSS3220-5E		20		5
VSS3232-4E		32		4
VSS4040-4E	40	40	34.4	4
VSS5050-4E	50	50	44.4	4

Basic load rating		Axial rigidity*1	Nut dimensions (mm)										Maximum shaft length*2 (mm)
Dynamic C_a (N)	Static C_{0a} (N)	(N/μm)	D	A	L	B	F	G	VC	TYPE	W	X	
43 300	111 000	682	56	86	132	18	89.5	34	24.5	I	71	M8	2 800
36 700	90 800	563			150		107.5						
36 700	90 800	561			169		126.5						
25 000	58 300	387			122		79.5						
33 600	83 900	472	70	100	144	22	94	38.5	27.5	II	85	M8	3 800
37 300	105 000	559	82	118	164	22	114.5	46	27.5	II	100	M10	5 000

Rigidity values in this table are theoretical values derived from elastic deformation between screw grooves and balls when axial load is applied to a ball nut for which preload is set at 1.5% of the basic dynamic load rating (C_a).

*2 Products with axial play may have a partially negative play (preloaded condition) depending on screw length. Refer to the NSK general catalog of Precision Machine Components CAT. No. E3161: "Manufacturing range of effective screw length in combination of accuracy grade and axial play."

www.bergab.ru Берг АБ bergab@ya.ru Тел. (495)-228-06-21, факс (495) 223-3071

www.bergab.ru Берг АБ bergab@ya.ru Тел. (495)-228-06-21, факс (495) 223-3071

MOTION & CONTROL™
NSK

NSK Linear Guides™

Roller Guide RA Series

A roller guide series employing advanced analysis technology offers super-high load capacity and rigidity. The RA series includes a complete lineup to handle a wide range of applications.

Extended series

www.bergab.ru Берг АБ bergab@ya.ru Тел. (495)-228-06-21, факс (495) 223-3071

www.bergab.ru Берг АБ bergab@ya.ru Тел. (495)-228-06-21, факс (495) 223-3071

The fruits of comprehensive technology of NSK RA series roller guides handle a diversity of applications

The RA series of roller guides is the product of a combination of NSK's extensive experience in roller bearings and linear guide technologies. The result is an optimal design that takes full advantage of NSK's unique expertise to realize super-high load capacity, rigidity and motion accuracy, plus smooth motion. Capable of handling a variety of applications, the RA series supports high machine performance.

RA series features support high machine performance

Super-long Life

Super-high load capacity

NSK has realized super-high load capacity, now the highest performance in the world, and achieved unprecedented operating life.

Maintenance-free

Installing an NSK K1™ lubrication unit assures long-term, maintenance-free operation.

Highly dust-proof

The high performance seals as standard equipment completely block the entry of foreign matter and maintain primary performance over the long term.

Contribution to High-precision Manufacturing

Super-high rigidity

Super-high rigidity provides high-precision manufacturing.

Super-high motion accuracy

Coupled with NSK's unique design approach, the vibration caused by roller passage has been substantially reduced. This will greatly contribute to improve machining quality.

Smooth motion

The installation of a retaining piece achieves smooth motion, resulting in stable positioning accuracy.

Five sizes (RA15, RA20, RA25, RA30 and RA65) have been added to the RA series. NSK also introduces a low-profile size (doesn't apply to RA20 and RA65).

Used in Many Fields

Complete series

Series includes a full lineup from small to large, including low-profile sizes. You can choose the model according to the application.

Interchangeable mounting dimensions

Outside dimensions and mounting dimensions conform to standard dimensions for the market, so RA series roller guides can be used without having to alter machine design. (See page 10 for mounting surface dimensions)

Low friction

Uses rollers for rolling elements to hold down dynamic friction.

Optimal design through integration of NSK technologies

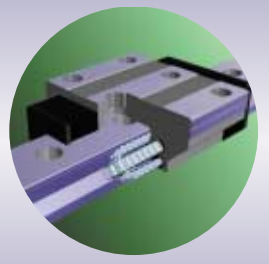

Smooth motion by use of retaining pieces

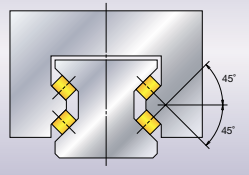

Balanced four-directional iso-load specifications

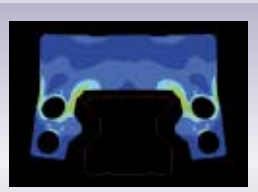

Example of roller slide deformation analysis

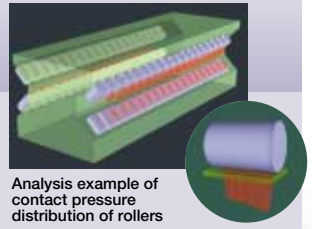

Analysis example of contact pressure distribution of rollers

NSK executed a comprehensive, detailed performance simulation of roller guides by integrating its analysis technology and the tribology technology that the company had been developing over many years. Down to the dimensions and shapes of component details, we have attained an optimal design completely.

www.bergab.ru Берг АБ bergab@ya.ru Тел. (495)-228-06-21, факс (495) 223-3071

www.bergab.ru Берг АБ bergab@ya.ru Тел. (495)-228-06-21, факс (495) 223-3071

NSK roller guide RA series exhibits the world's highest load capacity and enhance the performance of machine through a variety of features, including super-high rigidity, super-high motion accuracy, and low friction variation.

Features

Super-high load capacity

By installing rollers that are the largest possible diameter and length within the existing standard cross-section dimension in a rational layout based on analysis technology, we have realized the world's highest load capacity,* far superior to conventional roller guides. Super-long life is achieved and impact load can be sufficiently handled.

* Compared with products of the same size, as of September 1, 2003, researched by NSK.

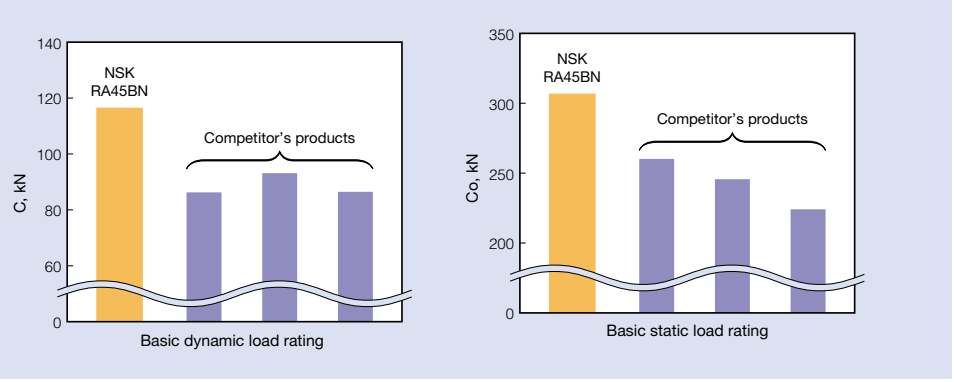

The basic load rating which is shown in the figures complies with ISO standards.
Standards for basic dynamic load rating: ISO14728-1
Standards for basic static load rating: ISO14728-2

Super-high rigidity

Using NSK's advanced analysis technology, we pursued a complete, optimal design, down to the detailed shape of roller slides and rails, thereby realizing super-high rigidity superior to that of competitor's roller guides.

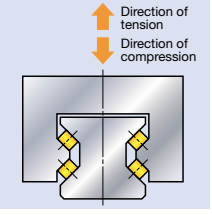

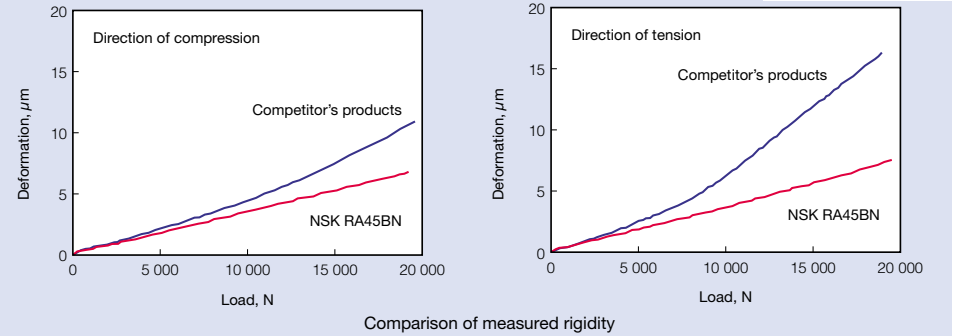

Comparison of measured rigidity

Super-high motion accuracy

NSK has developed its own unique method of simulating rolling element passage vibration and method of designing optimal roller slide specifications for damping roller passage vibration. These developments have dramatically enhanced roller slide motion accuracy for the RA series.

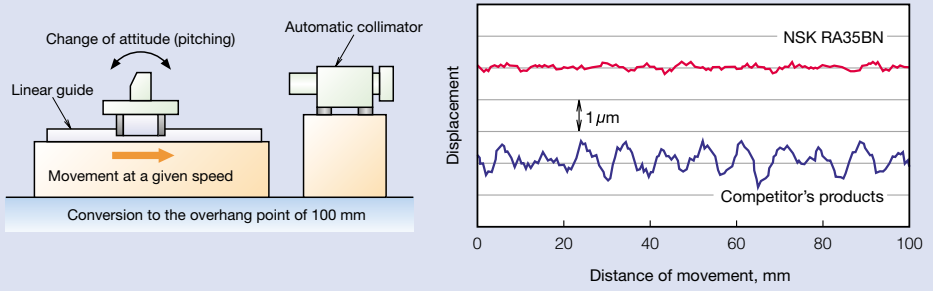

Comparison of measured motion accuracy

Smooth motion

Installing a retaining piece between rollers and restraining the skew peculiar to roller bearings achieve smooth motion. The reduction of friction variation provides stable tracking in the complicated trajectory control.

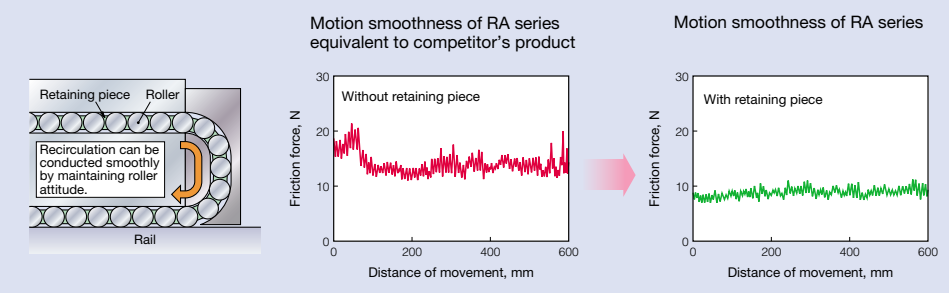

Measured motion smoothness

Mounting dimensions compatibility

The outer and mounting dimensions of RA series are based on market standards. RA series can be replaced without altering equipment design. (See page 10 for mounting surface dimensions)

www.bergab.ru Берг АБ bergab@ya.ru Тел. (495)-228-06-21, факс (495) 223-3071

www.bergab.ru Берг АБ bergab@ya.ru Тел. (495)-228-06-21, факс (495) 223-3071

Low friction

Using rollers for rolling elements helps minimize dynamic friction.

Measurement conditions
- Lubrication: Oil (VG68)
- Feeding speed: 1 m/min

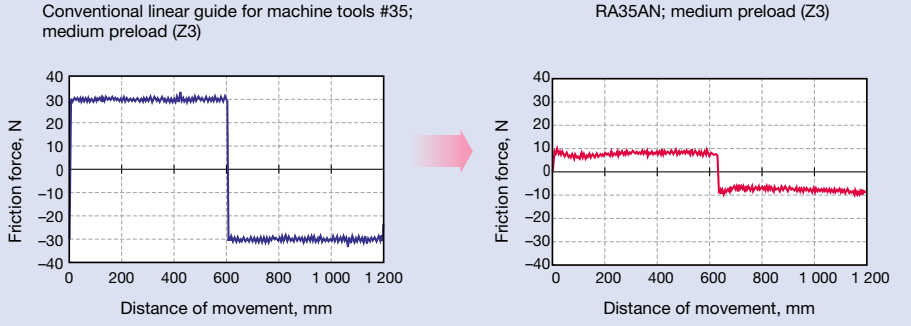

Comparison of measured dynamic friction force

Highly dust-proof and maintenance-free operation

Roller slides include high performance seals as standard equipment. The seal completely blocks the entry of foreign matter in to the rolling surface and prevents loss of performance. In addition, rail covers are also available for severe operating conditions. (Rail covers reduce the amount of foreign matter to 1/10 that of conventional linear guide for machine tools.)
The highly regarded NSK K1™ lubrication unit is also available to satisfy customer needs for long-term, maintenance-free operation.

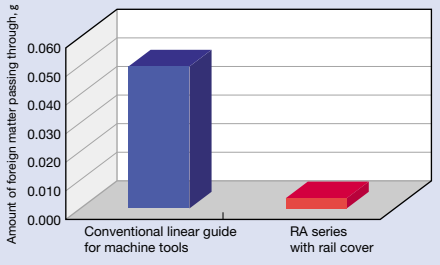

Example results of foreign matter invasion test

Low noise

A retaining piece is provided between rollers to prevent collision of rollers to minimize noise.

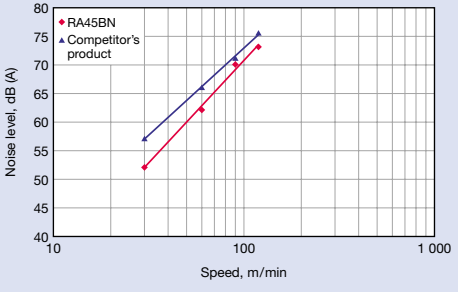

Example measurement of noise test

Microphone position: 500 mm above rail
Lubrication: Oil (VG68)

Specifications

1. Roller Slide Types and Shapes

- Two types of roller slides are available in this series: one with a mounting flange and a square type with tapped holes and no flange.
- A compact, low-profile square type is now available.
- On the mounting hole of the flange type, the tapped part is used to fix the roller slide from the top surface, and the minor diameter can be used as a bolt hole from the bottom. This provides mounting from both directions, top and bottom.
- Roller slide length can be specified by standard high load type or special long, super-high load type.

Fig. 1 Square type

Roller slide shape code

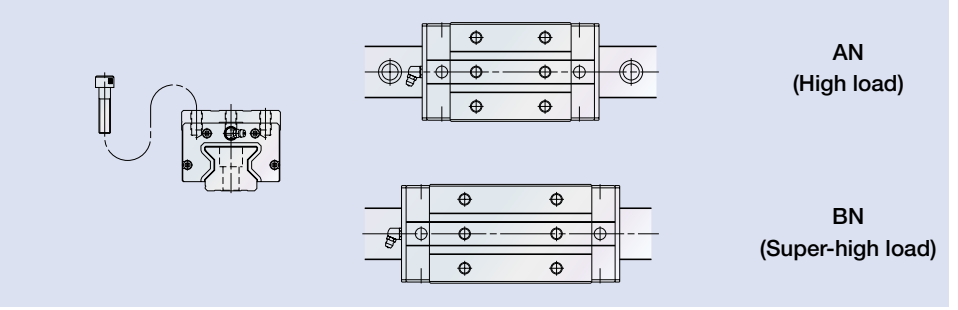

Fig. 2 Low-profile type

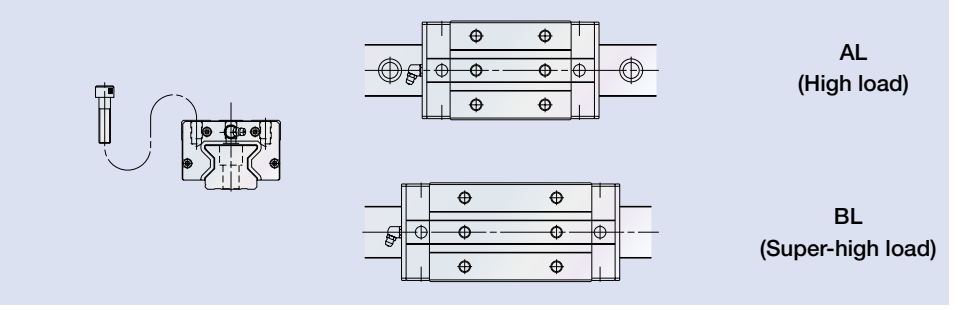

Fig. 3 Flange type

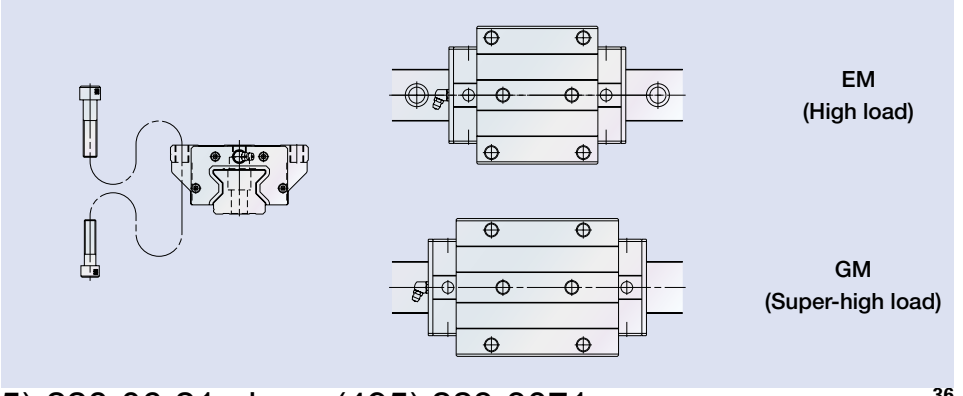

www.bergab.ru Берг АБ bergab@ya.ru Тел. (495)-228-06-21, факс (495) 223-3071

www.bergab.ru Берг АБ bergab@ya.ru Тел. (495)-228-06-21, факс (495) 223-3071

2. Accuracy

Four accuracy grades are available: ultra super precision P3, super precision P4, high precision P5, and precision P6.
∗: Difference in roller slides on the reference side roller guide.

Table 1 Accuracy standards

Unit: mm

Accuracy standards	Accuracy grades			
	Ultra super precision P3	Super precision P4	High precision P5	Precision P6
Mounting height: Dimensions in mounting height H	±0.008	±0.010	±0.020	±0.040
Mounting width: Dimensions in mounting width W_2 or W_3	±0.010	±0.015	±0.025	±0.050
Variation of mounting height dimension H	0.003	0.005	0.007	0.015
Variation of mounting width dimension W_2 or W_3*	0.003	0.007	0.010	0.020
Running parallelism of face C against face A Running parallelism of face D against face B	Refer to Table 2			

Table 2 Running parallelism

Unit: μm

Rail length (mm)	Ultra super precision P3	Super precision P4	High precision P5	Precision P6
Over – 50 or less	2	2	2	4.5
50 – 80	2	2	3	5
80 – 125	2	2	3.5	5.5
125 – 200	2	2	4	6
200 – 250	2	2.5	5	7
250 – 315	2	2.5	5	8
315 – 400	2	3	6	9
400 – 500	2	3	6	10
500 – 630	2	3.5	7	12
630 – 800	2	4	8	14
800 – 1 000	2.5	4.5	9	16
1 000 – 1 250	3	5	10	17
1 250 – 1 600	4	6	11	19
1 600 – 2 000	4.5	7	13	21
2 000 – 2 500	5	8	15	22
2 500 – 3 000	6	9.5	17	25

Fig. 4 Specifications of accuracy

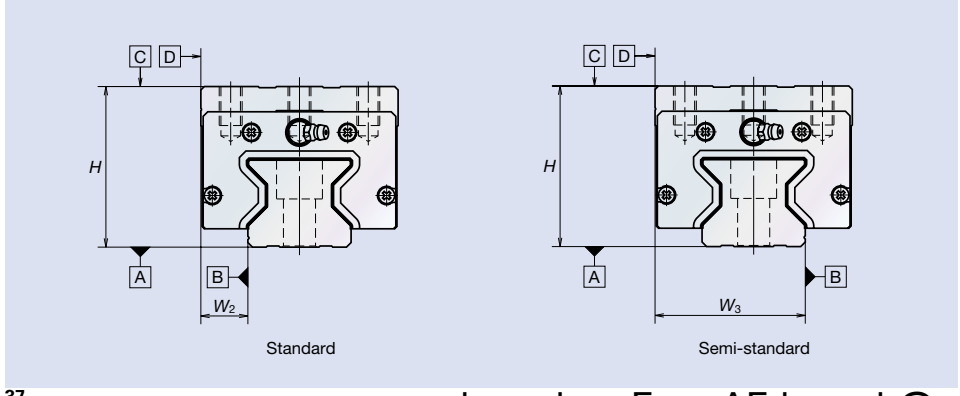

3. Preload and Rigidity

Preload is set for the RA series by slightly changing the size of the roller used. Applying preload enhances rigidity and minimizes elastic deformation.
With the characteristics of the roller guide, there is minimal variation in rigidity according to amount of preload. Because the RA series offers stable, high rigidity, only medium preload type Z3 (preload: 10% of C, where C is the basic dynamic load rating) is set. Typical measurements for preload and rigidity are as follows.

Table 3 Preload and rigidity

Model No.	Preload (N)	
	Medium preload (Z3)	
	High load capacity type AL, AN, EM	Ultra high load capacity type BL, BN, GM
RA15	1 030	1 300
RA20	1 920	2 400
RA25	2 920	3 540
RA30	3 890	4 760
RA35	5 330	6 740
RA45	9 280	11 600
RA55	12 900	16 800
RA65	21 000	28 800

Fig. 5 Direction of load

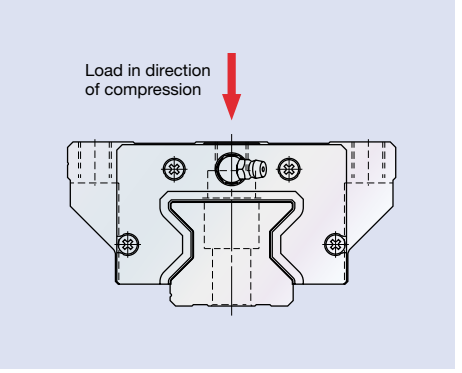

Fig. 6 Rigidity measurement data

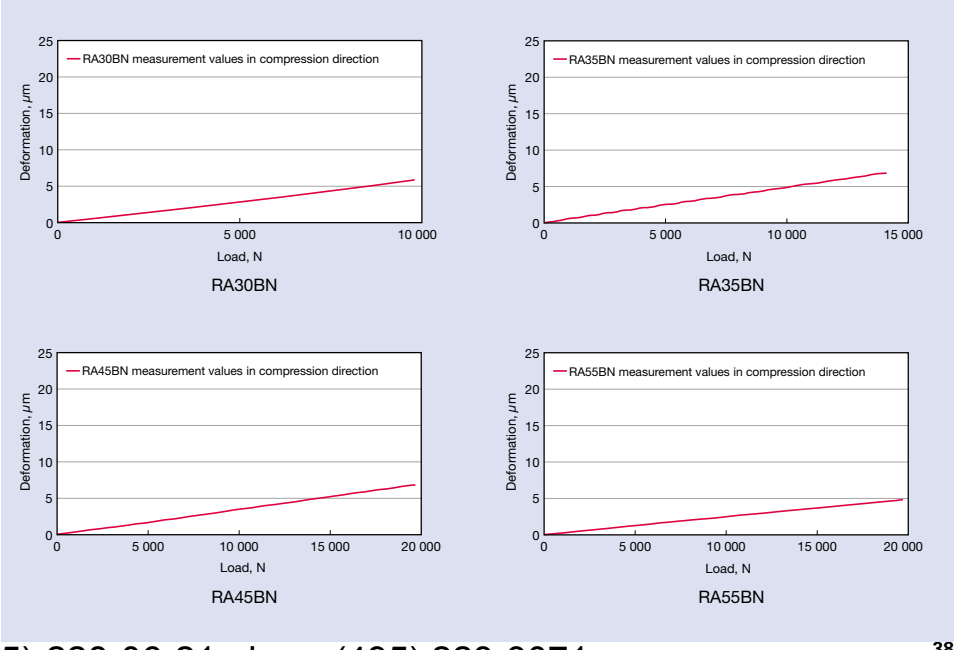

www.bergab.ru Берг АБ bergab@ya.ru Тел. (495)-228-06-21, факс (495) 223-3071

www.bergab.ru Берг АБ bergab@ya.ru Тел. (495)-228-06-21, факс (495) 223-3071

4. Basic Load Rating and Rated Life

Basic dynamic load rating that expresses load capacity is established by ISO standards (ISO14728-1) for linear guides. With basic dynamic load rating, direction and size do not fluctuate so that rated fatigue life is 100 km. Load rating for NSK linear guides complies with ISO standards. With the RA series, dynamic load rating is the same in both the vertical and horizontal directions (4-way equal load specs.). Rated fatigue life L is calculated by the following formula when load F is applied to the roller slide in the horizontal or vertical direction only.

- This life formula is different from that for linear guides with ball rolling elements.
- fw is load factor. Refer to the respective value from the following table 4 as a guideline according to potential vibration and the impact of the machine in which the linear guide is used, and select the load factor.

$$L = 100 \times \left(\frac{C}{fw \cdot F} \right)^{\frac{10}{3}} \text{ (km)}$$

- When load R in the horizontal direction and load S in the vertical direction are simultaneously applied, use the following dynamic equivalent load F for the calculation:

$$F = R + 0.5S \ (R \geq S)$$
$$F = S + 0.5R \ (R < S)$$

Table 3 Load factor *fw*

Impact and/or vibration	Load factor
No impact and vibration from the outside	1.0 – 1.5
With impact and/or vibration from the outside	1.5 – 2.0
With heavy impact and/or vibration from the outside	2.0 – 3.0

Fig. 7 Two directional load

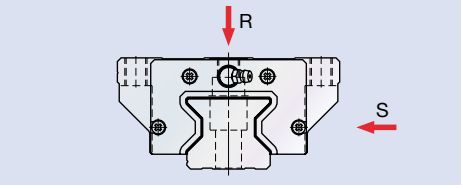

5. Lubrication Specifications

With standard specifications, grease fittings are mounted on the side of the roller slide for the RA series, but can also be mounted on the side of the end cap with optional specifications. A lubrication hole can also be provided on the top of the end cap.
Openings are not provided on the top or side with standard specifications in order to prevent dust.
Contact NSK for more information.

Fig. 8 Optional lubrication hole positions

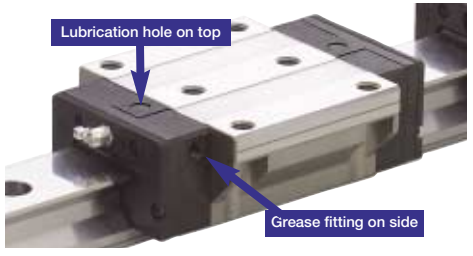

6. Dust-proof

RA series is equipped with side, inner* and bottom seals to prevent foreign matter from entering the inside of the roller slide. Under normal applications, the RA series can be used without modification.
For severe usage conditions, optional rail covers are available. Contact NSK for information on how to mount the cover. The linear guide can also be equipped with a lubrication unit (NSK K1™) that has already proven its effectiveness with other NSK linear guides.

Fig. 9 Rail cover**

Table 5 Optional parts for dust-proofing

Name	Objective
NSK K1	Porous part containing oil enhances lubrication function.
Double seal	Sealing effect is enhanced by using pairs of side seals.
Protector	Removes large dust particles and protects side seals from hot and hard dust particles.
Rail cover**	Covers top of rail to prevent foreign matter from getting in the rail mounting holes.
Bolt hole cap	Prevents foreign matter such as cutting dust from collecting in the rail mounting holes.

* Inner seals for RA15 and RA20 are available as options. ** Rail cover is applicable to RA25 to 65.

7. Installation

(1) Mounting tolerance

Mounting tolerance results in harmful effects such as shortened operating life, deterioration in motion accuracy, and friction variation.
NSK particularly focuses on operating life, and sets an operating life value of more than 20 000 km calculated under the following conditions as mounting tolerance:

- The load per roller slide is 10% of basic dynamic load rating C.
- The rigidity of machine is infinite.

The tolerance in Fig. 10 is shown in the Table 6 as typical tolerance.

Fig. 10 Mounting tolerance

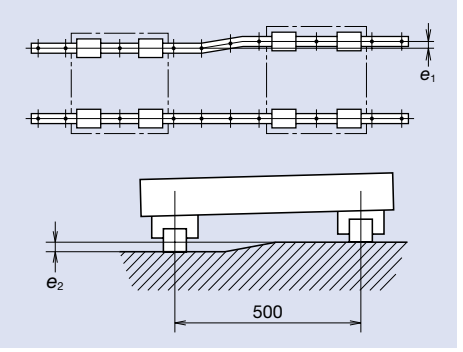

Table 6 Mounting tolerance of RA series

Unit: μm

Model No.	Parallelism tolerance of two roller guides e_1	Height tolerance of two roller guides e_2
RA15	5	150 μm / 500 mm
RA20	7	
RA25	9	
RA30	11	
RA35	13	
RA45	17	
RA55	19	
RA65	30	

(2) Shoulder height and corner radius of mounting surface

When using the shoulders, which rise perpendicularly to the mounting surface, for accurate installation of a roller guide, refer to Fig. 11 and Table 7 for the dimensions.

Fig. 11 Datum face of roller guide and shoulder

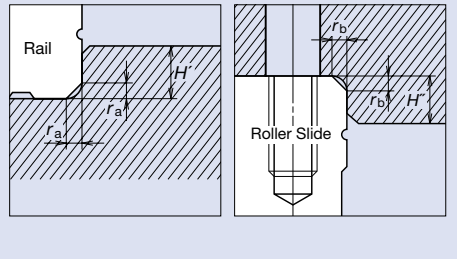

Table 7 Shoulder height and corner radius of attachment

Unit: mm

Model No.	Shoulder Height		Chamfer (maximum)	
	H´	H´´	r_a	r_b
RA15	3	4	0.5	0.5
RA20	4	5	0.5	0.5
RA25	4	5	0.5	1.0
RA30	5	6	1.0	1.0
RA35	5	6	1.0	1.0
RA45	6	8	1.5	1.0
RA55	7	10	1.5	1.5
RA65	11	11	1.5	1.5

Handling Precautions

① If oil lubrication is used, the oil may not pervade the rolling surface according to the roller slide mounting conditions such as upside down mounting and wall mounting. In these situations, consult with NSK.

② Operating temperature limits should normally be less than 80 ˚C.

③ If using NSK K1™, service temperature should not exceed 50 ˚C (or 80 ˚C instantaneously). Make sure the unit does not come in contact with organic solvents with that can be used for degreasing. Do not place the unit in a location exposed to white kerosene or rust prevention oil containing white kerosene.

www.bergab.ru Берг АБ bergab@ya.ru Тел. (495)-228-06-21, факс (495) 223-3071

Square type (tapped mounting holes)

RA–AL / RA–AN (High load type)

RA–BL / RA–BN (Super-high load type)

Example of specification number: RA 35 1000 AN C 2 - ** P4 3 - II

- Series code: RA
- Size No.: 35
- Rail length (mm): 1000
- Roller slide shape code AL, AN, BL, BN: AN
- Material and surface treatment code, C: Special carbon steel (NSK standard): C
- Number of roller slides per rail: 2
- Design number: **
- Accuracy grade (Without NSK K1): P3, P4, P5, P6 (With NSK K1): K3, K4, K5, K6: P4
- Preload code Z3: Medium preload: 3
- *II: two rails per axis / No code: single-rail: II

*Please note that the appropriate design number will be inserted into the reference number and the tag end code (–II) will be omitted.

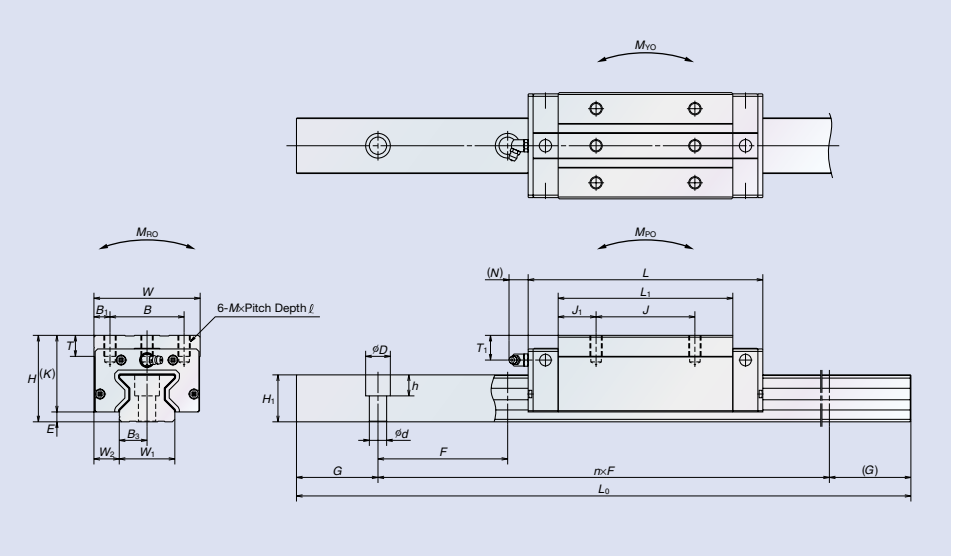

Model No.	Assembly Height H	E	W_2	Roller slide Width W	Length L	Tapped hole B	J	M×Pitch×ℓ	B_1	L_1	J_1	K	T	Grease nipple Mounting hole	T_1	N
RA15AL	24	4	9.5	34	70	26	26	M4×0.7×5.5	4	44.8	9.4	20	8	ϕ3	4	3
RA15AN	28							M4×0.7×6				24			8	
RA15BL	24				85.4			M4×0.7×5.5		60.2	17.1	20			4	
RA15BN	28							M4×0.7×6				24			8	
RA20AN	30	5	12	44	86.5	32	36	M5×0.8×6	6	57.5	10.75	25	12	ϕ3	4	3
RA20BN					106.3		50			77.3	13.65					
RA25AL	36	5	12.5	48	97.5	35	35	M6×1×8	6.5	65.5	15.25	31	12	M6×0.75	6	11
RA25AN	40							M6×1×9				35			10	
RA25BL	36				115.5		50	M6×1×8		83.5	16.75	31			6	
RA25BN	40							M6×1×9				35			10	
RA30AL	42	6.5	16	60	110.8	40	40	M8×1.25×11	10	74	17	35.5	14	M6×0.75	7	11
RA30AN	45											38.5			10	
RA30BL	42				135.4		60			98.6	19.3	35.5			7	
RA30BN	45											38.5			10	
RA35AL	48	6.5	18	70	123.8	50	50	M8×1.25×12	10	83.2	16.6	41.5	15	M6×0.75	8	11
RA35AN	55											48.5			15	
RA35BL	48				152		72			111.4	19.7	41.5			8	
RA35BN	55											48.5			15	
RA45AL	60	8	20.5	86	154	60	60	M10×1.5×16	13	105.4	22.7	52	17	R_C1/8	10	14
RA45AN	70							M10×1.5×17				62			20	
RA45BL	60				190		80	M10×1.5×16		141.4	30.7	52			10	
RA45BN	70							M10×1.5×17				62			20	
RA55AL	70	9	23.5	100	184	75	75	M12×1.75×18	12.5	128	26.5	61	18	R_C1/8	11	14
RA55AN	80											71			21	
RA55BL	70				234		95			178	41.5	61			11	
RA55BN	80											71			21	
RA65AN	90	13	31.5	126	228.4	76	70	M16×2×20	25	155.4	42.7	77	22	R_C1/8	19	14
RA65BN					302.5		120			229.5	54.75					

Rail width W_1	Rail height H_1	Rail: Bolt pitch F	Bolt hole d×D×h	B_3	G (recommended)	Maximum length L_{0max}	Basic load rating: Dynamic C (N)	Static C_0 (N)	Static moment (N·m) M_{R0}	M_{P0}	M_{Y0}	Weight: Bearing (kg)	Rail (kg/m)
15	16.3	60* (30)	4.5×7.5×5.3	7.5	20	2 000	10 300	27 500	260	210	210	0.17	1.6
												0.21	
							13 000	37 000	350	375	375	0.25	
												0.30	
20	20.8	60* (30)	6×9.5×8.5	10	20	3 000	19 200	52 500	665	505	505	0.38	2.6
							24 000	70 000	890	900	900	0.50	
23	24	30	7×11×9	11.5	20	3 000	29 200	72 700	970	760	760	0.45	3.4
												0.60	
							35 400	92 900	1 240	1 240	1 240	0.80	
												0.91	
28	28	40	9×14×12	14	20	3 500	38 900	93 500	1 670	1 140	1 140	0.85	4.9
												1.0	
							47 600	121 000	2 170	1 950	1 950	1.1	
												1.3	
34	31	40	9×14×12	17	20	3 500	53 300	129 000	2 810	1 800	1 800	1.2	6.8
												1.6	
							67 400	175 000	3 810	3 250	3 250	1.7	
												2.1	
45	38	52.5	14×20×17	22.5	22.5	3 500	92 800	229 000	6 180	4 080	4 080	2.5	10.9
												3.0	
							116 000	305 000	8 240	7 150	7 150	3.4	
												4.1	
53	43.5	60	16×23×20	26.5	30	3 500	129 000	330 000	10 200	7 060	7 060	4.1	14.6
												4.9	
							168 000	462 000	14 300	13 600	13 600	5.7	
												6.7	
63	55	75	18×26×22	31.5	35	3 500	210 000	504 000	19 200	12 700	12 700	9.3	22.0
							288 000	756 000	28 700	28 600	28 600	12.2	

* Either 60 mm or 30 mm of bolt pitch F is applicable for RA15 and RA20.
60 mm bolt pitch will be provided if not specified.

- The basic load rating complies with ISO standards (ISO14728-1, ISO14728-2).
  If the above basic dynamic load rating (100 km rating) is converted into 50 km rating, use the following formula:
  $C_{50\,km} = 1.23 \times C_{100\,km}$
- If the rail length exceeds the above limitation, you may be able to cope with the problem by rails for butting connections. Contact NSK for more information.

www.bergab.ru Берг АБ bergab@ya.ru Тел. (495)-228-06-21, факс (495) 223-3071

Flange type (for both tapped and bolt mounting holes)

RA–EM (High load type)

RA–GM (Super-high load type)

Example of specification number: RA 35 1000 EM C 2 - ** P4 3 - II

- Series code: RA
- Size No.: 35
- Rail length (mm): 1000
- Roller slide shape code EM, GM: EM
- Material and surface treatment code, C: Special carbon steel (NSK standard): C
- Number of roller slides per rail: 2
- Design number: **
- Accuracy grade: P4 (Without NSK K1): P3, P4, P5, P6 (With NSK K1): K3, K4, K5, K6
- Preload code Z3: Medium preload: 3
- *II: two rails per axis; No code: single-rail: II

*Please note that the appropriate design number will be inserted into the reference number and the tag end code (–II) will be omitted.

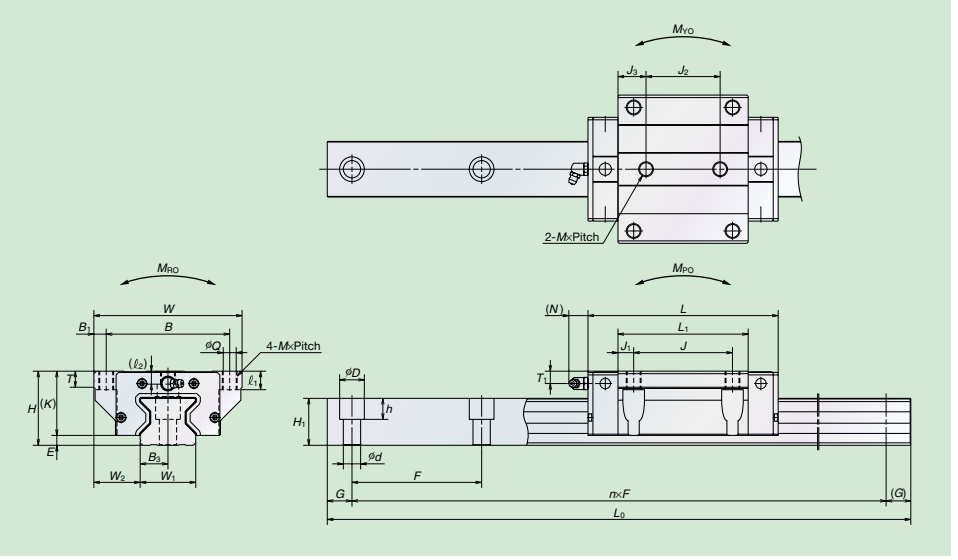

Model No.	Assembly Height H	E	W_2	Roller slide Width W	Length L	Tapped hole, Fixing bolt B	J	J_2	M×Pitch×ℓ_1(ℓ_2)	Q×ℓ_1(ℓ_2)	B_1	L_1	J_1	J_3	K	T
RA15EM RA15GM	24	4	16	47	70 85.4	38	30	26	M5×0.8×8.5 (6.5)	4.4×8.5 (6.5)	4.5	44.8 60.2	7.4 15.1	9.4 17.1	20	8
RA20EM RA20GM	30	5	21.5	63	86.5 106.3	53	40	35	M6×1×9.5 (8)	5.3×9.5 (8)	5	57.5 77.3	8.75 18.65	11.25 21.15	25	10
RA25EM RA25GM	36	5	23.5	70	97.5 115.5	57	45	40	M8×1.25×10 (11)	6.8×10 (11)	6.5	65.5 83.5	10.25 19.25	12.75 21.75	31	11
RA30EM RA30GM	42	6.5	31	90	110.8 135.4	72	52	44	M10×1.5×12 (12.5)	8.6×12 (12.5)	9	74 98.6	11 23.3	15 27.3	35.5	11
RA35EM RA35GM	48	6.5	33	100	123.8 152	82	62	52	M10×1.5×13 (7)	8.6×13 (7)	9	83.2 111.4	10.6 24.7	15.6 29.7	41.5	12
RA45EM RA45GM	60	8	37.5	120	154 190	100	80	60	M12×1.75×15 (10.5)	10.5×15 (10.5)	10	105.4 141.4	12.7 30.7	22.7 40.7	52	13
RA55EM RA55GM	70	9	43.5	140	184 234	116	95	70	M14×2×18 (13)	12.5×18 (13)	12	128 178	16.5 41.5	29 54	61	15
RA65EM RA65GM	90	13	53.5	170	228.4 302.5	142	110	82	M16×2×24 (18.5)	14.6×24 (18.5)	14	155.4 229.5	22.7 59.75	36.7 73.75	77	22

Grease nipple Mounting hole	T_1	N	Rail Rail width W_1	Rail height H_1	Bolt pitch F	Bolt hole d×D×h	B_3	G (recommended)	Maximum length L_{0max}	Basic load rating Dynamic C (N)	Static C_0 (N)	Static moment (N·m) M_{R0}	M_{P0}	M_{Y0}	Weight Bearing (kg)	Rail (kg/m)
ϕ3	4	3	15	16.3	60* (30)	4.5×7.5×5.3	7.5	20	2 000	10 300 13 000	27 500 37 000	260 350	210 375	210 375	0.21 0.28	1.6
ϕ3	4	3	20	20.8	60* (30)	6×9.5×8.5	10	20	3 000	19 200 24 000	52 500 70 000	665 890	505 900	505 900	0.45 0.65	2.6
M6×0.75	6	11	23	24	30	7×11×9	11.5	20	3 000	29 200 35 400	72 700 92 900	970 1 240	760 1 240	760 1 240	0.80 1.1	3.4
M6×0.75	7	11	28	28	40	9×14×12	14	20	3 500	38 900 47 600	93 500 121 000	1 670 2 170	1 140 1 950	1 140 1 950	1.3 1.7	4.9
M6×0.75	8	11	34	31	40	9×14×12	17	20	3 500	53 300 67 400	129 000 175 000	2 810 3 810	1 800 3 250	1 800 3 250	1.7 2.3	6.8
R_C1/8	10	14	45	38	52.5	14×20×17	22.5	22.5	3 500	92 800 116 000	229 000 305 000	6 180 8 240	4 080 7 150	4 080 7 150	3.2 4.3	10.9
R_C1/8	11	14	53	43.5	60	16×23×20	26.5	30	3 500	129 000 168 000	330 000 462 000	10 200 14 300	7 060 13 600	7 060 13 600	5.4 7.5	14.6
R_C1/8	19	14	63	55	75	18×26×22	31.5	35	3 500	210 000 288 000	504 000 756 000	19 200 28 700	12 700 28 600	12 700 28 600	12.2 16.5	22.0

* Either 60 mm or 30 mm of bolt pitch *F* is applicable for RA15 and RA20.
60 mm bolt pitch will be provided if not specified.

- The basic load rating complies with ISO standards (ISO14728-1, ISO14728-2).
  If the above basic dynamic load rating (100 km rating) is converted into 50 km rating, use the following formula:
  $C_{50\,km} = 1.23 \times C_{100\,km}$
- If the rail length exceeds the above limitation, you may be able to cope with the problem by rails for butting connections. Contact NSK for more information.

www.bergab.ru Берг АБ bergab@ya.ru Тел. (495)-228-06-21, факс (495) 223-3071

MOTION & CONTROL™
NSK

NSK Linear Guides™
Miniature PU Series/PE Series

Series of interchangeable products that enable random matching between rails and ball slides. Miniature PU and PE series support diverse applications, from semiconductor manufacturing devices to medical equipment.

Patent Pending

New development

New product

www.bergab.ru Берг АБ bergab@ya.ru Тел. (495)-228-06-21, факс (495) 223-3071

www.bergab.ru Берг АБ bergab@ya.ru Тел. (495)-228-06-21, факс (495) 223-3071

Easy-to-handle, lightweight design. NSK Miniature Linear Guide provides smoother motion with unprecedented lightness.

The new generation PU series/PE series inherit the outstanding lineage of the NSK miniature linear guides LU series/LE series. Resin ball recirculation components improve dynamic friction characteristics and create smoother motion with reduced noise intensity. High performance features enhanced dust-proofing, low dust generation, and high corrosion resistance. The new design supports a wide variety of applications.

Ergonomic, gentler tone and low dust generation. NSK Linear Guides Miniature PU Series (Interchangeable with the LU Series)

Ideal for wide, single-rail applications. NSK Linear Guides Miniature PE Series (Interchangeable with the LE Series)

1 Features

1. Motion performance
Newly designed recirculation component facilitates smooth circulation of steel balls.

2. Lightweight
The ball slide is fabricated to be approximately 20% lighter than conventional models by the application of resin to a part of its body.*

* Miniature LU series/LE series

3. Reduced noise intensity
Resin components applied in ball circulating circuits reduce collision noise between steel balls.

4. Low dust generation
The structure of the ball slide is designed to prevent dust generation.

5. Excellent dust-proofing
The labyrinth structure adopted for the side of the rails and the inner walls of the ball slide allows effects equivalent to an under seal.

6. High corrosion resistance
High corrosion-resistant martensite stainless steel incorporated as a standard feature provides excellent resistance to corrosion

7. Easy to handle
Safety design includes a retainer that prevents steel balls from dropping out of the ball slide even when the slide is removed from the rail.

8. Long-term maintenance-free
Equipped with NSK K1™ Lubrication unit realizes long-term, maintenance-free use.

9. Fast delivery
Lineup of interchangeable rails and ball slides in the series supports random matching and facilitates fast delivery.

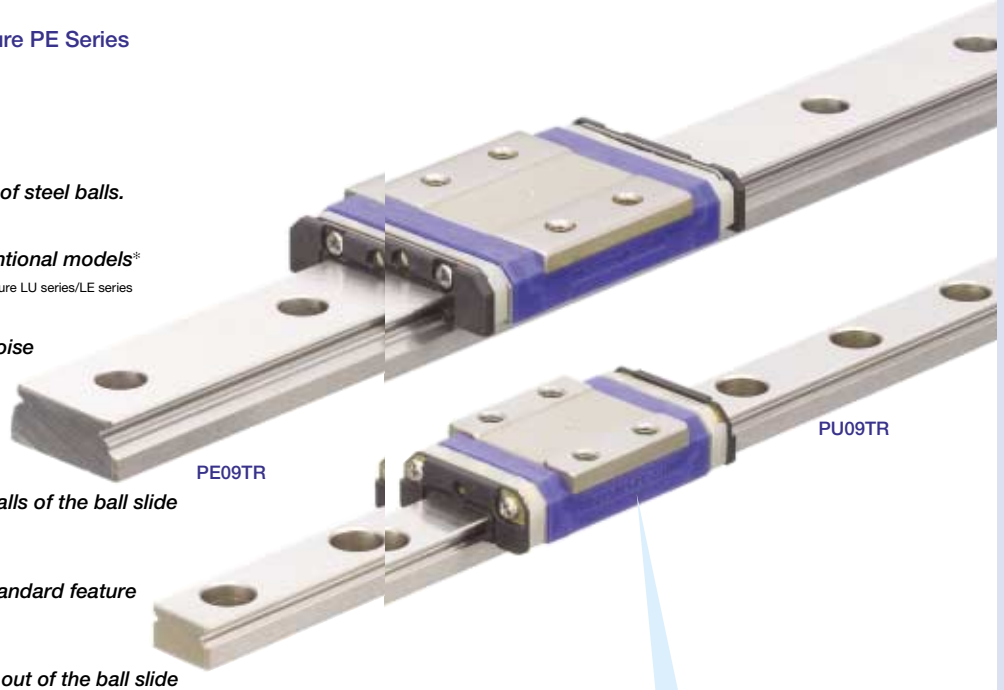

New *Smoother motion with resin recirculation circuits. Gentler tone and low dust generation.*

NSK Linear Guides Miniature PU Series PE Series

Smoother motion

The resin ball recirculation component creates an optimal configuration allowing gentler contact with steel balls, resulting in improved dynamic friction characteristics and smoother motion.

Test conditions: Oil lubrication (VG68)
Operating speed: 1,000 mm/min
Load cell rated capacity: 5N

Fig. 1-1 Fluctuations in dynamic friction

Low dust generation

The PU series/PE series, with resin ball recirculation components, generates less dust than a conventional ball recirculation hole that goes right through the ball slide.

Test conditions: Grease lubrication (LG2)
Operating speed: 600 mm/min
Stroke: 200 mm

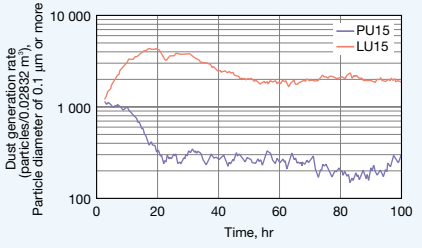

Fig. 1-2 Dust generation rate

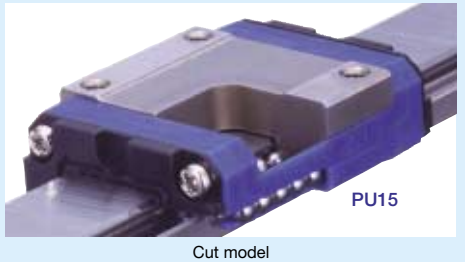

Cut model

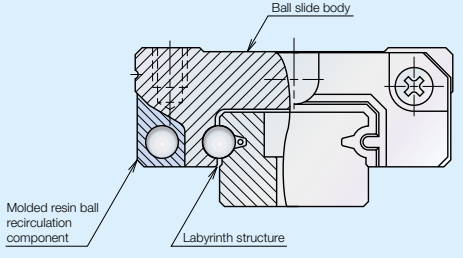

Fig. 2 Cross sectional front view

www.bergab.ru Берг АБ bergab@ya.ru Тел. (495)-228-06-21, факс (495) 223-3071

www.bergab.ru Берг АБ bergab@ya.ru Тел. (495)-228-06-21, факс (495) 223-3071

2 Reference number

Reference numbers will be used as reference before finalizing all specifications. These numbers indicate outline specifications. Please specify the reference number, except design serial number, to identify the product when ordering, requesting estimates, or inquiring about specifications from NSK. The reference number is a set number for a single rail. For multiple rails, at least two sets of reference numbers are required.

2.1 Preloaded assembly type

Example: PU 15 0470 AL K 2 - P5 1 - II**

- Series name
- Size
- Rail length (mm)
- Ball slide shape code
- Material/surface treatment K: Stainless steel / H: Stainless steel + surface treatment
- Number of ball slides per rail
- Design serial number
- Accuracy grade PN: Normal, P6: Precision, P5: High precision, P4: Super precision (with NSK K1) KN: Normal, K6: Precision, K5: High precision, K4: Super precision
- Preload code 0: Fine clearance (Z0), 1: Slight preload (Z1)
- No end code: Single rail, -II: Two rails (*)

(*) Please note that the appropriate design number will be inserted into the reference number and the tag end code (-II) will be omitted.

2.2 Interchangeable type

(1) Reference number for rail and ball slide assembly

Example: PU 15 0470 AL K 2 - PC T - II**

- Series name
- Size
- Rail length (mm)
- Ball slide shape code
- Material/surface treatment K: Stainless steel / H: Stainless steel + surface treatment
- Number of ball slides per rail
- Design serial number
- Accuracy grade PC: Normal (with NSK K1) KC: Normal
- Preload code T: Fine clearance compatible (ZT)
- No end code: Single rail, -II: Two rails (*)

(*) Please note that the appropriate design number will be inserted into the reference number and the tag end code (-II) will be omitted.

(2) Reference number for ball slide of interchangeable type

Example: PA U 15 AL S - K

- Single ball slide code
- Series name U: PU, E: PE
- Size
- Ball slide shape code
- Material code S: Stainless steel
- Option code -K: products with NSK K1

(3) Reference number for rail of interchangeable type

Example: P1 U 15 0470 R K N - PC T**

- Single rail code
- Series name U: PU, E: PE
- Size
- Rail length (mm)
- Rail shape code S: PU09·12, R: PU05·15 PE05·07·09·12, P: PE15
- Material/surface treatment K: Stainless steel / H: Stainless steel + surface treatment
- Joint rail code (*) N: non-jointed rails, L: joint rails
- Design serial number
- Accuracy grade PC: Normal (with NSK K1) KC: Normal
- Preload code T: Fine clearance compatible (ZT)

(*) Please contact with NSK for more details regarding joint rails.

3 Accuracy standard

We offer the following product accuracy grades: Super precision grade P4, High precision grade P5, Precision grade P6, and Normal grade PN for preloaded assembly type, and Normal grade PC for interchangeable type.

Table 1 Accuracy standard for preloaded assembly types Unit: μm

Item \ Accuracy grade	Super precision P4	High precision P5	Precision P6	Normal PN
Mounting height H	±10	±15	±20	±40
Variation of Mounting height H (All ball slides on a pair of rails)	5	7	15	25
Mounting width dimension W_2 or W_3	±15	±20	±30	±50
Variation of Mounting width dimension W_2 or W_3 (All ball slides on datum rails)	7	10	20	30
Running parallelism of face C against face A	Refer to Table 3, Fig. 3, Fig. 4			
Running parallelism of face D against face B				

Table 2 Accuracy standard for interchangeable type Unit: μm

Item \ Accuracy grade	Normal PC
Mounting height H	±20
Variation of Mounting height H (one rail)	15
Variation of Mounting height H (multiple rails)	30
Mounting width dimension W_2 or W_3	±20
Variation of Mounting width dimension W_2 or W_3 (All ball slides on datum rails)	20
Running parallelism of face C against face A	Refer to Table 3, Fig. 3, Fig. 4
Running parallelism of face D against face B	

Table 3 Running parallelism tolerance Unit: μm

Rail length (mm) over	or less	Preloaded assembly type P4	P5	P6	PN	Interchangeable type PC
	50	2	2	4.5	6	6
50 ~	80	2	3	5	6	6
80 ~	125	2	3.5	5.5	6.5	6.5
125 ~	200	2	4	6	7	7
200 ~	250	2.5	5	7	8	8
250 ~	315	2.5	5	8	9	9
315 ~	400	3	6	9	11	11
400 ~	500	3	6	10	12	12
500 ~	630	3.5	7	12	14	14
630 ~	800	4.5	8	14	16	16
800 ~	1000	5	9	16	18	18
1000 ~	1250	6	10	17	20	20

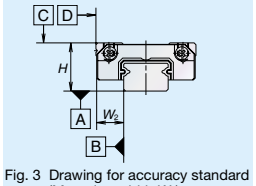

Fig. 3 Drawing for accuracy standard (Mounting width W_2)

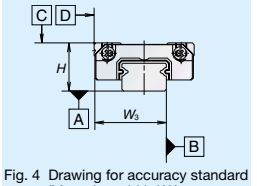

Fig. 4 Drawing for accuracy standard (Mounting width W_3)

www.bergab.ru Берг АБ bergab@ya.ru Тел. (495)-228-06-21, факс (495) 223-3071

www.bergab.ru Берг АБ bergab@ya.ru Тел. (495)-228-06-21, факс (495) 223-3071

4 Preload and rigidity

We offer three levels of preload: Slight preload (Z1) and Fine clearance (Z0), along with interchangeable types of Fine clearance (ZT). Values for preload and rigidity of the preloaded assembly types are shown in Tables 4 and 5.

Table 4 Preload and rigidity of preloaded assembly of PU series

Model No.	Preload (N)	Rigidity (N /μm)
	Slight preload (Z1)	Slight preload (Z1)
PU05TR	0 ~ 3	17
PU07AR	0 ~ 8	22
PU09TR	0 ~ 10	30
PU12TR	0 ~ 17	33
PU15AL	0 ~ 33	45

Table 5 Preload and rigidity of preloaded assembly of PE series

Model No.	Preload (N)	Rigidity (N /μm)
	Slight preload (Z1)	Slight preload (Z1)
PE05AR	0 ~ 28	45
PE07TR	0 ~ 29	46
PE09TR	0 ~ 37	61
PE12AR	0 ~ 40	63
PE15AR	0 ~ 49	66

Clearance of fine clearance Z0 is 0-3 μm. Therefore, preload is zero.
Clearance values of the interchangeable types are shown in Tables 6 and 7.

Table 6 Clearance of interchangeable type of PU series Unit: μm

Model No.	Fine clearance ZT
PU05TR	Less than 3
PU07AR	
PU09TR	
PU12TR	
PU15AL	

Table 7 Clearance of interchangeable type of PE series Unit: μm

Model No.	Fine clearance ZT
PE05AR	Less than 3
PE07TR	
PE09TR	
PE12AR	
PE15AR	

5 Applications

- Smoother motion and low dust generation
  Liquid crystal manufacturing and printed circuit board manufacturing devices
- Lightweight and low dust generation
  Semiconductor manufacturing devices (mounter, die bonder, and exposure device)
- Gentler tone and excellent dust proof features
  Medical machinery and various precision devices

6 Height and corner configuration of the mount face

Figs. 5, 6 and Tables 8, 9 show the shoulder height and corner radius dimensions, when fixing the linear guide horizontally by pushing it onto the shoulder (projected portion from the mount face) of the bed or table.

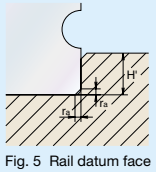

Fig. 5 Rail datum face

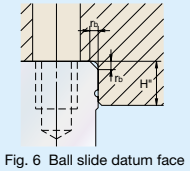

Fig. 6 Ball slide datum face

Table 8 Shoulder height and corner radius of the mount face (PU series) Unit: mm

Model No.	Corner radius (Maximum)		Shoulder height	
	r_a	r_b	H'	H"(*)
PU05TR	0.2	0.2	0.7	2.3
PU07AR	0.2	0.3	1.2	2.5
PU09TR	0.3	0.3	1.9	2.6
PU12TR	0.3	0.3	2.5	3.4
PU15AL	0.3	0.5	3.5	4.4

(*) H" is the minimum recommended value based on the dimension *T* in Table 13.

Table 9 Shoulder height and corner radius of the mount face (PE series) Unit: mm

Model No.	Corner radius (Maximum)		Shoulder height	
	r_a	r_b	H'	H"(*)
PE05AR	0.2	0.2	1.1	2.5
PE07TR	0.2	0.3	1.7	3
PE09TR	0.3	0.3	3.5	2.8
PE12AR	0.3	0.3	3.5	3.2
PE15AR	0.3	0.5	3.5	4.1

(*) H" is the minimum recommended value based on the dimension *T* in Table 14.

7 Lubrication

Selection of grease: Table 10 below shows grease that is suitable for the PU series/PE series. We specify PS2 as the standard grease for NSK miniature linear guides.

Table 10 Grease list

Grease code	Thickener	Base oil	Base oil kinematic viscosity mm^2/s (40°c)	Temperature range for use (°C)	Characteristic Application
PS2	Lithium type	Synthetic oil + Mineral oil	15	-50 to 110	• Better low temperature and dynamic characteristics • Suitable for high speed and light load application
LG2	Lithium type	Mineral oil + Synthetic hydrocarbon oil	30	-10 to 80	• Low duct emission grease for clean room application
LGU	Diurea type	Synthetic hydrocarbon oil	100	-30 to 120	• Low dust emission grease for high temperature, clean room application

8 Dust proofing

Side seal: Provided to both sides of the ball slide as a standard feature.
Bottom seal function: A labyrinth structure of the ball slide bottom face functions as sealing effect.
NSK K1™: Lubrication unit. Tables 11 and 12 shows the related dimensions when attaching NSK K1™.

Table 11 Dimensions when attaching NSK K1 (PU series) Unit: mm

Model No.	Ball slide length when attaching two NSK K1s, *L*	Thickness of single NSK K1, V_1	Thickness of protection cover, V_2
PU05TR	24.4	2	0.5
PU07AR	29.4	2.5	0.5
PU09TR	36.4	2.7	0.5
PU12TR	42	3	0.5
PU15AL	51.2	3.5	0.6

Table 12 Dimensions when attaching NSK K1 (PE series) Unit: mm

Model No.	Ball slide length when attaching two NSK K1s, *L*	Thickness of single NSK K1, V_1	Thickness of protection cover, V_2
PE05AR	28.9	2	0.4
PE07TR	37.1	2.5	0.5
PE09TR	46.8	3	0.5
PE12AR	53	3.5	0.5
PE15AR	66.2	4	0.8

* Ball slide length when attaching NSK K1 = ("Standard ball slide length") + ("Thickness of single NSK K1, V_1 × Numbers of NSK K1s) + ("Thickness of protection cover", V_2 × 2)

www.bergab.ru Берг АБ bergab@ya.ru Тел. (495)-228-06-21, факс (495) 223-3071

www.bergab.ru Берг АБ bergab@ya.ru Тел. (495)-228-06-21, факс (495) 223-3071

9 Dimensions

9.1 Rail and ball slide assembly (preloaded type, interchangeable type)

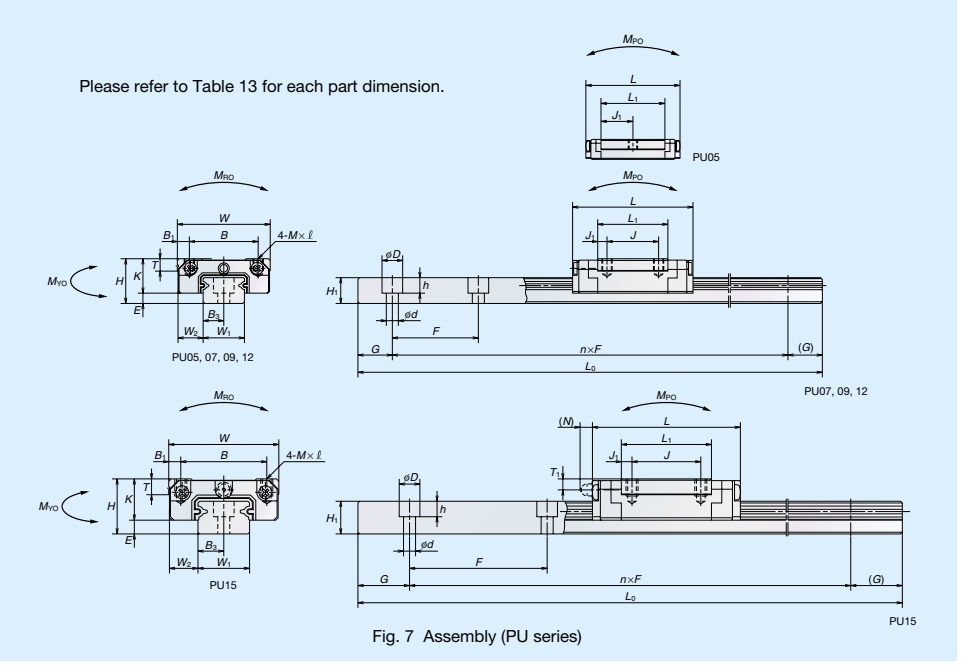

Fig. 7 Assembly (PU series)

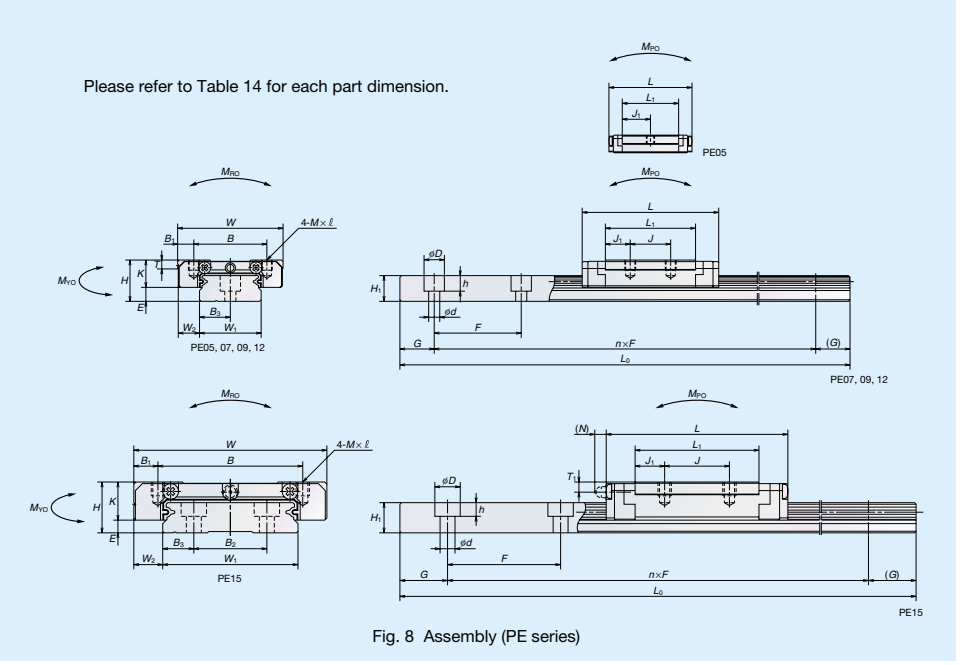

Fig. 8 Assembly (PE series)

Table 10 Dimensions (PU series)

Unit: mm

Model No.	Assembly			Ball slide																					
	Height			Width	Length	Mounting tap hole									Grease fitting			Rail							Basic load rating (*)						Ball diameter	Weight	
	H	E	W_2	W	L	B	J	$M\times$Pitch$\times\ell$	B_1	L_1	J_1	K	T	Port diameter	T_1	N	Width W_1	Height H_1	Pitch F	Mounting bolt hole $d\times D\times h$	B_3	G (recommended)	Maximum length L_{0max}	Dynamic C(N)	Static C_0(N)	Static moment (N·m) M_{R0}	M_{P0}	M_{Y0}	D_W	Ball slide (g)	Rail (g/100mm)
PU05TR	6	1	3.5	12	19.4	8	—	$M2\times0.4\times1.5$	2	11.4	5.7	5	2.3	—	—	—	5	3.2	15	$2.3\times3.3\times0.8$	2.5	5	210	520	775	2	1	1	1	4	11
PU07AR	8	1.5	5	17	23.4	12	8	$M2\times0.4\times2.4$	2.5	13.3	2.65	6.5	2.45	—	—	—	7	4.7	15	$2.4\times4.2\times2.3$	3.5	5	375	1 090	1 370	5	3	3	1.5875	8	23
PU09TR	10	2.2	5.5	20	30	15	10	$M3\times0.5\times3$	2.5	19.6	4.8	7.8	2.6	—	—	—	9	5.5	20	$3.5\times6\times4.5$	4.5	7.5	600	1 490	2 150	10	6	6	1.5875	16	35
PU12TR	13	3	7.5	27	35	20	15	$M3\times0.5\times3.5$	3.5	20.4	2.7	10	3.4	—	—	—	12	7.5	25	$3.5\times6\times4.5$	6	10	800	2 830	3 500	21	11	11	2.3812	32	65
PU15AL	16	4	8.5	32	43	25	20	$M3\times0.5\times5$	3.5	26.2	3.1	12	4.4	$\phi3$	3.2	(3.3)	15	9.5	40	$3.5\times6\times4.5$	7.5	15	1 000	5 550	6 600	50	26	26	3.175	59	105

(*)The basic load rating complies with ISO standards.

Table 11 Dimensions (PE series)

Unit: mm

Model No.	Assembly			Ball slide																					
	Height			Width	Length	Mounting tap hole									Grease fitting			Rail							Basic load rating (*)						Ball diameter	Weight	
	H	E	W_2	W	L	B	J	$M\times$Pitch$\times\ell$	B_1	L_1	J_1	K	T	Port diameter	T_1	N	Width W_1	Height H_1	B_2	Pitch F	Mounting bolt hole $d\times D\times h$	B_3	G (recommended)	Maximum length L_{0max}	Dynamic C(N)	Static C_0(N)	Static moment (N·m) M_{R0}	M_{P0}	M_{Y0}	D_W	Ball slide (g)	Rail (g/100mm)
PE05AR	6.5	1.4	3.5	17	24.1	13	—	$M2.5\times0.45\times1.5$	2	16.4	8.2	5.1	2.5	—	—	—	10	4	—	20	$3\times5\times1.6$	5	7.5	150	690	1 160	6	3	3	1	7	34
PE07TR	9	2	5.5	25	31.1	19	10	$M3\times0.5\times2.8$	3	20.8	5.4	7	3	—	—	—	14	5.2	—	30	$3.5\times6\times3.2$	7	10	600	1 580	2 350	17	7	7	1.5875	19	55
PE09TR	12	4	6	30	39.8	21	12	$M3\times0.5\times3$	4.5	26.6	7.3	8	2.8	—	—	—	18	7.5	—	30	$3.5\times6\times4.5$	9	10	800	3 000	4 500	37	17	17	2	35	95
PE12AR	14	4	8	40	45	28	15	$M3\times0.5\times4$	6	31	8	10	3.2	—	—	—	24	8.5	—	40	$4.5\times8\times4.5$	12	15	1 000	4 350	6 350	71	29	29	2.3812	66	140
PE15AR	16	4	9	60	56.6	45	20	$M4\times0.7\times4.5$	7.5	38.4	9.2	12	4.1	$\phi3$	3.2	(3.3)	42	9.5	23	40	$4.5\times8\times4.5$	9.5	15	1 200	7 600	10 400	207	59	59	3.175	140	275

(*)The basic load rating complies with ISO standards.

www.bergab.ru Берг АБ bergab@ya.ru Тел. (495)-228-06-21, факс (495) 223-3071

www.bergab.ru Берг АБ bergab@ya.ru Тел. (495)-228-06-21, факс (495) 223-3071

9.2 Interchangeable type

(1) Ball slide of interchangeable types

Please refer to Table 13 for each part dimension.

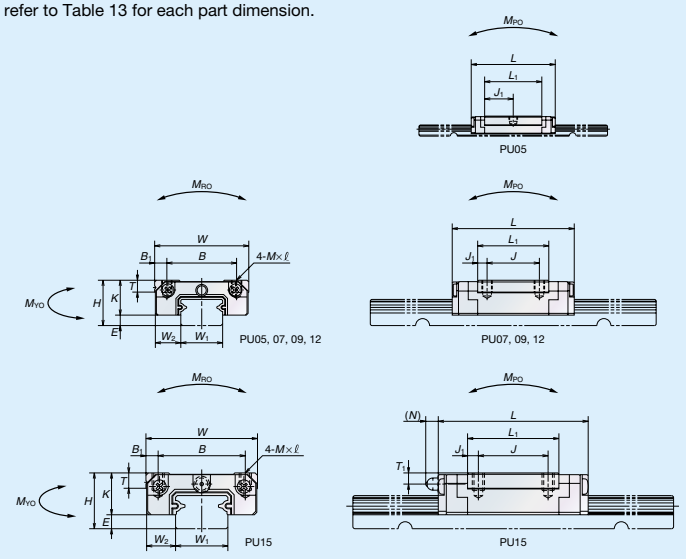

Fig. 9 Ball slide of interchangeable types (PU series)

Please refer to Table 14 for each part dimension.

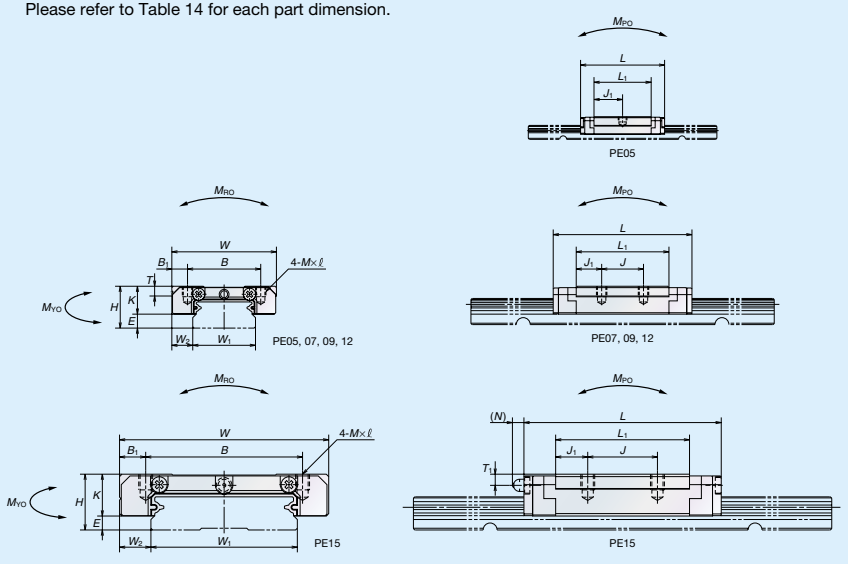

Fig. 10 Ball slide of interchangeable types (PE series)

(2) Rail of interchangeable types

Please refer to Table 13 for each part dimension.

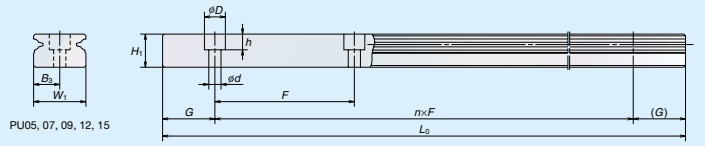

Fig. 11 Rail of interchangeable types (PU series)

Please refer to Table 14 for each part dimension.

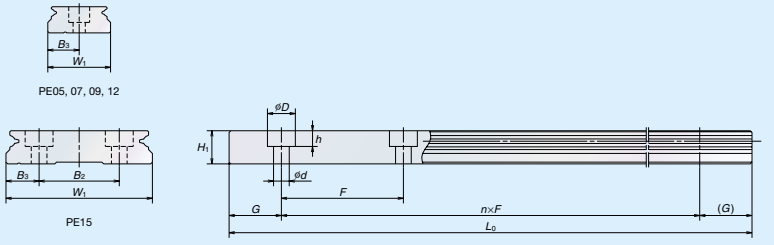

Fig. 12 Rail of interchangeable types (PE series)

10 Interchangeability with LU series/LE series

The PU series/PE series is designed to be interchangeable with the LU series/LE series for its mounting dimensions and load ratings(*).
Refer to Figs. 7, 8 and Tables 13, 14 for more details.

(*) Not including load rating of PU05 and PE05.

11 Handling precautions

(1) Resin parts such as the end cap may become damaged when struck or hit.
(2) Maximum operating temperature must be 80˚C or below. Exceeding this limit may damage resin parts.
(3) Maximum operating temperature must be 50˚C (max. momentary 80˚C) when attaching NSK K1™. Also, avoid exposure to organic solvents with a degreasing effect. Do not immerse in kerosene or rust preventative oil (with kerosene ingredients).
(4) Handing of interchangeable types
① Interchangeable ball slide will be delivered with a provisional rail (inserting fixture).
② Be sure to use the provisional rail when removing ball slide(s) from a rail.
③ Do not remove the ball slide from provisional rail until inserting into a rail.

www.bergab.ru Берг АБ bergab@ya.ru Тел. (495)-228-06-21, факс (495) 223-3071

www.bergab.ru Берг АБ bergab@ya.ru Тел. (495)-228-06-21, факс (495) 223-3071

MOTION & CONTROL
NSK

NSK Linear Guides™
High-Accuracy Series

New!

Patent Pending

Suitable for equipment ranging from machine tools to high-precision instruments—high-performance linear guides with premier motion accuracy

www.bergab.ru Берг АБ bergab@ya.ru Тел. (495)-228-06-21, факс (495) 223-3071

www.bergab.ru Берг АБ bergab@ya.ru Тел. (495)-228-06-21, факс (495) 223-3071

Realizing outstanding motion accuracy with high rigidity and load capacity—High-Accuracy Series high-performance linear guides, HA Type and HS Type

Trends toward higher performance and enhanced quality of electronics equipment and precision instruments have been accelerating. At the same time, demand has been growing for highly precise production systems that manufacture such equipment and instruments. NSK strives to always stay ahead of competition by providing the industry with products that keep pace with trends and needs of the times. Part of these products are the high-performance linear guides, High-Accuracy Series. The innovative design makes full use of NSK's world-class proprietary technologies to achieve high motion accuracy, high rigidity and high load capacity while reducing frictional resistance.
The High-Accuracy Series is available for machine tools such as machining centers and high-precision lathes, as well as for high-precision instruments for manufacturing semi-conductors and liquid crystal displays, among other applications, all of which are required to meet the ever-increasing demand for higher accuracy. These linear guides are therefore well-suited for a broad variety of machinery and equipment that are expected to deliver high-level performance.

Features

1. *High motion accuracy*

High motion accuracy is achieved in both narrow and wide ranges by adopting ultra-long ball slides and optimum design features for the ball recirculation component.

2. *Ball passage vibration reduced to one-third of our conventional models*

Tests show ball passage vibration has been reduced to one-third of our conventional models, dramatically improving table straightness.

3. *Installation of rail with greater accuracy*

Increased counterbore depth of the rail mounting hole reduces rail deflection, which is caused by bolt tightening when fixing the rail to the base component, to 50% or less. This feature restrains the pitching motion of ball slide whose frequency matches to the mounting hole pitch. In addition, the length of mounting hole pitch has been reduced by one-half of the conventional models, so the rail can be more accurately installed in position.

4. *High rigidity and load capacity with lower friction*

High rigidity, high load capacity and low friction are achieved by increasing the number of balls.

5. *Compact design*

Reduced body size enables more compact machinery.

Table 1 Examples of High-Accuracy Series applications (based on actual results)

Application	Adverse effects from ball passage vibration	Advantages of High-Accuracy Series
Machining center, grinding machine, dicer, and slicer	Poor finish of worked surface	● Ultra-long ball slides control posture changes in bearing which may be caused by ball passage vibration and rail waviness. ● Optimum design of ball recirculation components enables the ball to move smoothly and restrain ball passage vibration. ● Deep counterbore of mounting hole for rail contributes to reducing possible rail deformation and restricting ball slide pitching motion.
Coater (linear motion type)	Uneven coated surface of resist	
Plastics processing equipment	Flaw nearly twice as large as ball diameter in pitch occurs in worked surface	
High-precision table	Deterioration in motion accuracy of table	

High-performance linear guides, High-Accuracy Series

● Dust proof seals

Highly dust-tight end seals, bottom seals, and inner seals are built-in as standard features, facilitating long-term machining capability with high accuracy.

Fig. 1 Fitting positions of each seal

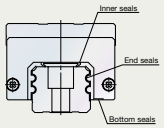

Linear Guide HA type

HA Type applications

The HA Type linear guides feature improved dust resistance and are ideal for such machines as machining centers, high-precision lathes and grinding machines, for which higher motion accuracy is required. In addition, they are suitable for discharge machines because of their low friction and high rigidity.

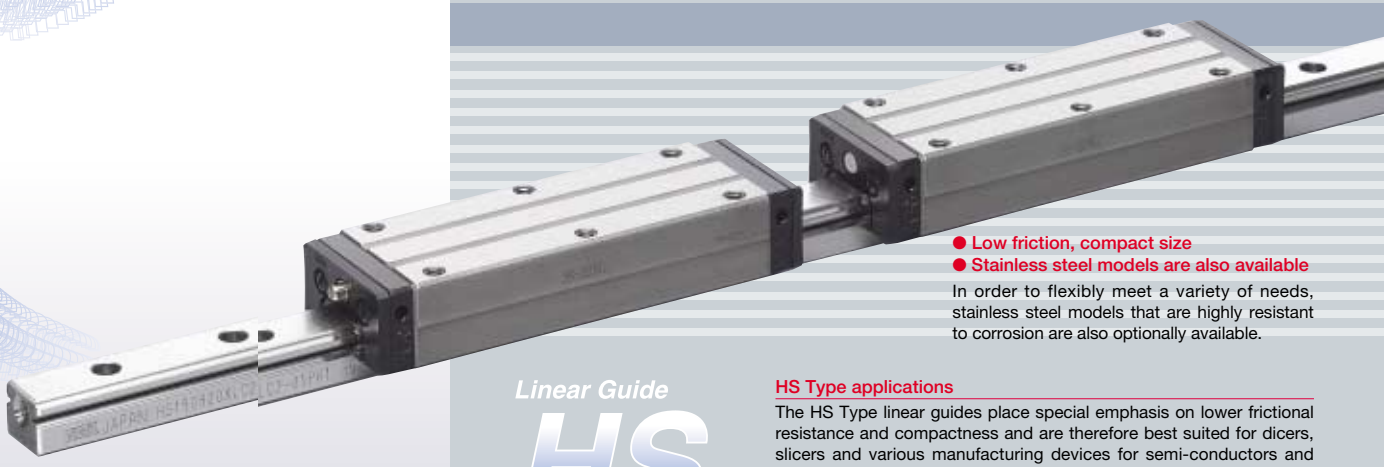

● Low friction, compact size
● Stainless steel models are also available

In order to flexibly meet a variety of needs, stainless steel models that are highly resistant to corrosion are also optionally available.

Linear Guide HS type

HS Type applications

The HS Type linear guides place special emphasis on lower frictional resistance and compactness and are therefore best suited for dicers, slicers and various manufacturing devices for semi-conductors and liquid crystal displays, for which high-grade accurate surface finish operations are required, including measuring instruments for making highly accurate measurements.

www.bergab.ru Берг АБ bergab@ya.ru Тел. (495)-228-06-21, факс (495) 223-3071

www.bergab.ru Берг АБ bergab@ya.ru Тел. (495)-228-06-21, факс (495) 223-3071

Test results of ball passage vibration

Ball passage vibration can translate into posture changes in the ball slide which result from ball passage (circulation). In the High-Accuracy Series, this vibration has been substantially reduced to one-third of conventional models.

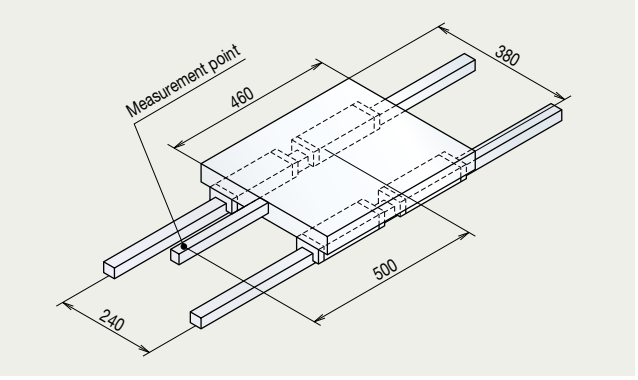

Fig. 2 Schematic view of measurement of ball passage vibration

HA Type

Model No.: HA30
Preload: Z3
Table dimensions: 460mm × 380mm

Conventional models

Model No.: LA30
Preload: Z3
Table dimensions: 460mm × 380mm

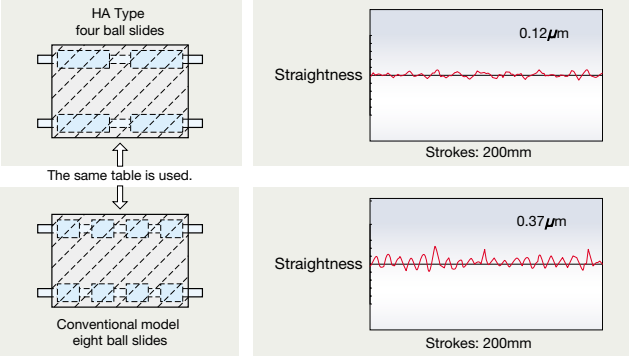

Fig. 3 Measurement results of HA Type and conventional models

HS Type

Model No.: HS30
Preload: Z1
Table dimensions: 460mm × 380mm

Conventional models

Model No.: LS30
Preload: Z1
Table dimensions: 460mm × 380mm

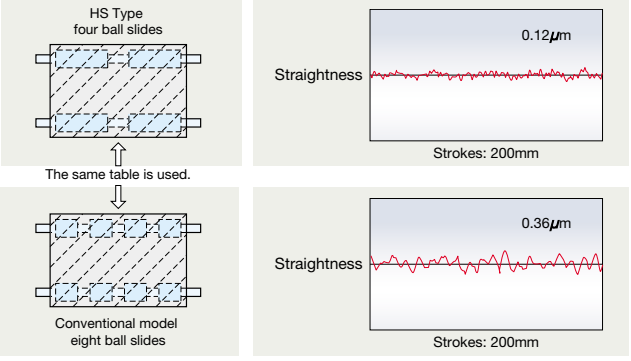

Fig. 4 Measurement results of HS Type and conventional models

High rigidity and high load capacity with low friction

Substantially increasing the number of balls in both HA Type and HS Type achieves higher rigidity and load capacity as well as reduced frictional resistance, compared to our conventional models.

HA Type

For example, compared with LA35, the following HA models feature:

- the same dynamic load rating, at one size smaller (HA30)
- the same rigidity, at two sizes smaller (HA25)
- 120% higher rigidity with one-sixth friction (HA35)

HS Type

For example, compared with LS30, the following HS models feature:

- the same dynamic load rating, at one size smaller (HS25)
- the same rigidity, at three sizes smaller (HS15)
- 110% higher rigidity with one-fifth friction (HS30)

Fig. 5 Comparisons of dynamic load rating

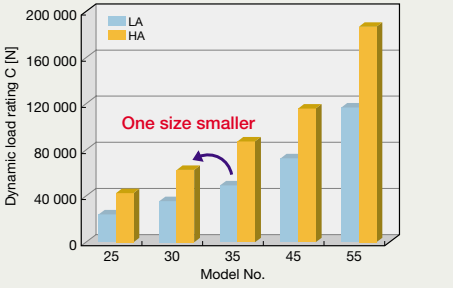

Fig. 8 Comparisons of dynamic load rating

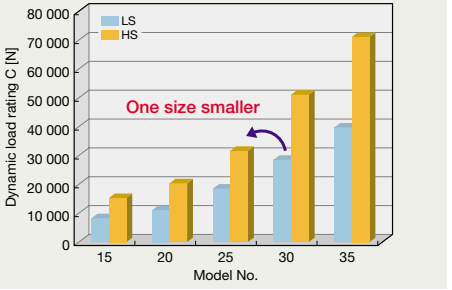

Fig. 6 Comparisons of rigidity

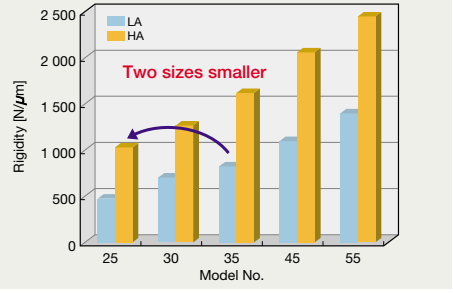

Fig. 9 Comparisons of rigidity

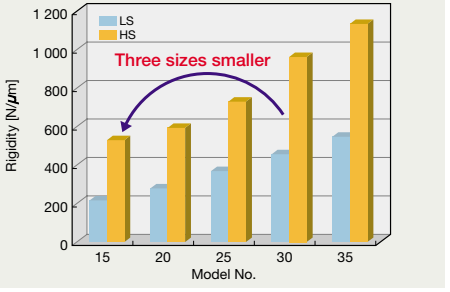

Fig. 7 Comparisons of dynamic friction force and rigidity

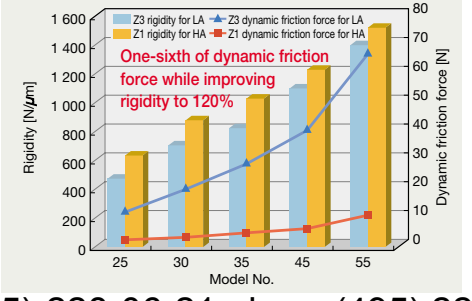

Fig. 10 Comparisons of dynamic friction force and rigidity

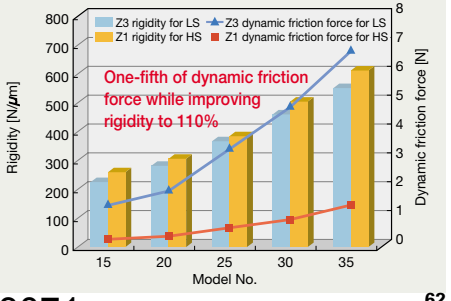

www.bergab.ru Берг АБ bergab@ya.ru Тел. (495)-228-06-21, факс (495) 223-3071

www.bergab.ru Берг АБ bergab@ya.ru Тел. (495)-228-06-21, факс (495) 223-3071

Accuracy standard and preload

Three accuracy grades are available: ultra super precision P3, super precision P4, and high precision P5.
Slight preload Z1 and medium preload Z3 are available for preload, which can be selected for specific applications.

Table 2 Accuracy standard

unit: μm

Items \ Accuracy grade	Ultra super precision P3	Super precision P4	High precision P5
Assembly height H	±10	±10	±20
Variation of assembly height H (All slides on a pair of rails)	3	5	7
Mounting width W_2 or W_3	±15	±15	±25
Variation of mounting width W_2 or W_3 (All slides on datum rails)	3	7	10
Running parallelism of face C against face A Running parallelism of face D against face B	Refer to Table 3 for tolerance. See Fig. 11 and Fig.12.		

Table 3 Running parallelism tolerance

unit: μm

Total rail length (mm) \ Accuracy grade	P3	P4	P5
Over—200 or less	2	2	4
200—250	2	2.5	5
250—315	2	2.5	5
315—400	2	3	6
400—500	2	3	6
500—630	2	3.5	7
630—800	2	4.5	8
800—1 000	2.5	5	9
1 000—1 250	3	6	10
1 250—1 600	4	7	11
1 600—2 000	4.5	8	13
2 000—2 500	5	10	15
2 500—3 150	6	11	17
3 150—4 000	9	16	23

Fig. 11 Mounting width (W_2) and running parallelism

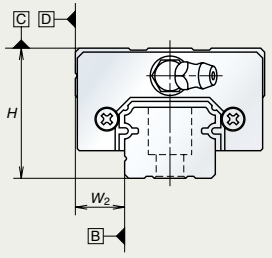

Fig. 12 Mounting width (W_3) and running parallelism

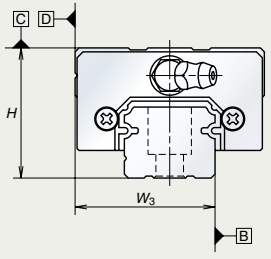

Table 4 Preload and rigidity

HA Type

Model No.	Preload (N)		Rigidity (N/μm)	
	Slight preload (Z1)	Medium preload (Z3)	Slight preload (Z1)	Medium preload (Z3)
HA25	735	2 990	635	1 030
HA30	1 030	4 400	880	1 270
HA35	1 470	6 100	1 030	1 620
HA45	1 960	8 150	1 230	2 060
HA55	3 150	13 100	1 520	2 450

HS Type

Model No.	Preload (N)		Rigidity (N/μm)	
	Slight preload (Z1)	Medium preload (Z3)	Slight preload (Z1)	Medium preload (Z3)
HS15	98	785	260	530
HS20	147	1 030	305	600
HS25	245	1 620	385	735
HS30	390	2 550	505	965
HS35	590	3 550	610	1 140

Specification number

The specification number indicates main specifications through numbers and codes. The specification number is used until the final reference number, indicated in a specification drawing, is assigned upon confirming specifications with the user. The reference number consists of the specification code, the design serial number, and additional information as applicable.

Example: HS 30 1000 AL C 2 - ＊＊ K5 1 - Ⅱ

Series code
Size No.
Rail length, mm
Ball slide shape code
AN: Square, AL: Low square, EM: Flange
(*1) Material and surface treatment code
C: Special high-carbon steel
K: Stainless steel
D: Special high-carbon steel + Surface treatment
H: Stainless steel + Surface treatment
Number of ball slides per rail
(*2) Design serial number
Accuracy grade
Without K1 P3: Ultra super precision, P4: Super precision, P5: High precision
With K1 K3: Ultra super precision, K4: Super precision, K5: High precision
Preload code
1: Slight preload 2: Medium preload
No code : One rail
Ⅱ : Two rails (*2)

(*1) Surface treatment is provided by low-temperature black chrome plating (black surface coating by electrolytic protection against corrosion).
Optional low-temperature chrome plating treatment that further improves anticorrosion properties by means of fluorocarbon resin coating is also available.
(*2) Design serial number is appended to delivery reference number (model number), which in turn does not reflect the final number.

Long-term, maintenance-free operation

Optional

The NSK K1 lubrication unit can be installed to ensure long-term, maintenance-free operation.

Table 5 Dimensions of linear guides equipped with NSK K1 lubrication unit

HA Type

unit: mm

Model No.	Ball slide length equipped with two NSK K1, L	Thickness of NSK K1, V_1	Thickness of protection cover, V_2
HA25	159.8	5.0	1.0
HA30	190.2	5.5	1.0
HA35	216.6	5.5	1.0
HA45	248.4	6.5	1.0
HA55	299.4	6.5	1.0

HS Type

unit: mm

Model No.	Ball slide length equipped with two NSK K1, L	Thickness of NSK K1, V_1	Thickness of protection cover, V_2
HS15	115.6	4.0	0.8
HS20	130.3	4.5	0.8
HS25	158.6	4.5	0.8
HS30	188.1	5.0	1.0
HS35	216.6	5.5	1.0

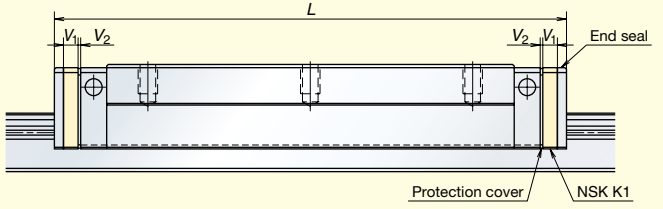

Fig. 13 Ball slide equipped with NSK K1

- Ball slide length equipped with NSK K1 = (Standard bearing length) + (Thickness of NSK K1, V_1 × Number of NSK K1) + (Thickness of protection cover, V_2 × 2)

Pioneering in the industry with super-finished ball groove feature

Optional

The super-finished ball groove with a super-precision rolling groove is also available as an option for even higher accuracy.

(The super-finished ball groove can be applied for the ultra super precision P3 grade.)

Precautions for proper use and handling

- Balls will fall out if a bearing is removed from the rail. Also, remember the bearing may shift and fall out if the rail is tilted without a stopper.
- Take appropriate safety measures against falling loads when mounting the bearing upside down (e.g., when using the bearing facing downward from a ceiling-mounted rail).
- Ensure that ambient temperature does not exceed 50℃ (80℃, instantaneous) when installing NSK K1. In addition, do not allow the unit to come into contact with degreasing organic solvents.

www.bergab.ru Берг АБ bergab@ya.ru Тел. (495)-228-06-21, факс (495) 223-3071

www.bergab.ru Берг АБ bergab@ya.ru Тел. (495)-228-06-21, факс (495) 223-3071

Three HA Type linear guides are available in the High-Accuracy Series: AN Type, AL Type, and EM Type, any of which can be selected for specific applications.

Fig. 14 AN Type

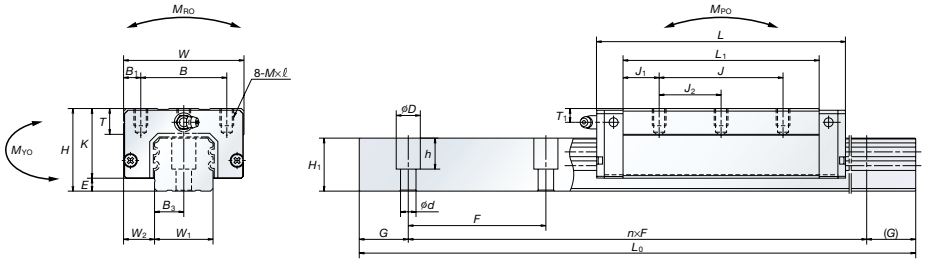

Fig. 15 AL Type

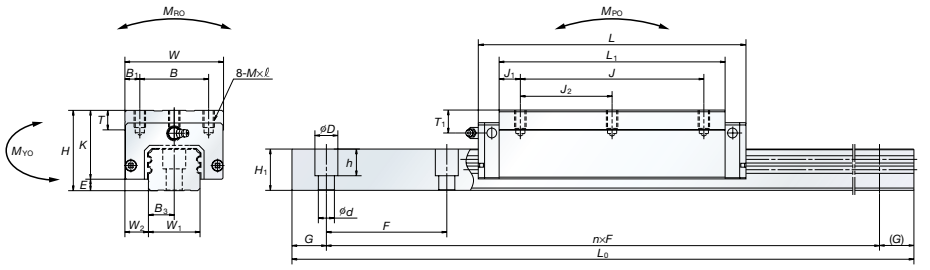

Fig. 16 EM Type

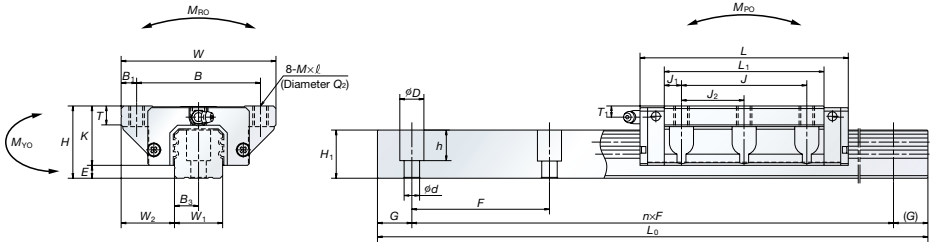

Table 6 Assembly dimensions for AN Type and AL Type

Model No.	Assembly dimension			Ball slide dimension														
	Height			Width	Length	Hole position			Tapped hole						Grease nipple		
	H	E	W_2	W	L	B	J	J_2	M×pitch×ℓ	B_1	L_1	J_1	K	T	Mounting hole	T_1	N
HA25AN	40	5.5	12.5	48	147.8	35	100	50	M6×1.0×10	6.5	126	13	34.5	12	M6×0.75	10	11
HA30AN	45	7.5	16	60	177.2	40	120	60	M8×1.25×11	10	149	14.5	37.5	14	M6×0.75	9.5	11
HA35AN HA35AL	55 48	7.5	18	70	203.6	50	140	70	M8×1.25×12	10	173	16.5	47.5 40.5	15	M6×0.75	15 8	11
HA45AN HA45AL	70 60	10	20.5	86	233.4	60	160	80	M10×1.5×16	13	197	18.5	60	17	R_C1/8	20 10	13
HA55AN HA55AL	80 70	12	23.5	100	284.4	75	206	103	M12×1.75×18	12.5	245	19.5	68	18	R_C1/8	21 11	13

Rail dimension							Basic load rating					Ball diameter	Weight	
Rail width	Rail height	Bolt pitch	Bolt hole		G	Maximum length	Dynamic	Static	Static moment (N·m)				Ball slide	Rail
W_1	H_1	F	d×D×h	B_3	(recommended)	L_0max	C (N)	C_0 (N)	M_{RO}	M_{PO}	M_{YO}	D_W	(kg)	(kg/m)
23	22	30	7×11×16.5	11.5	20	3 960	54 000	115 000	670	2 060	2 060	3.968	1.2	3.7
28	28	40	9×14×21	14	20	4 000	79 500	166 000	1 140	3 550	3 550	4.762	1.8	5.8
34	30.8	40	9×14×23.5	17	20	4 000	111 000	226 000	1 950	5 650	5 650	5.556	3.0 2.6	7.7
45	36	52.5	14×20×27	22.5	22.5	3 990	147 000	295 000	3 700	8 450	8 450	6.350	6.0 5.0	12.0
53	43.2	60	16×23×32.5	26.5	30	3 960	232 000	445 000	6 500	15 400	15 400	7.937	9.4 7.8	17.2

Table 7 Assembly dimensions for EM Type

Model No.	Assembly dimension			Ball slide dimension														
	Height			Width	Length	Hole position			Tapped hole	Drill hole					Grease nipple		
	H	E	W_2	W	L	B	J	J_2	M×pitch×ℓ	Diameter Q_2	B_1	L_1	J_1	K	T	Mounting hole	T_1	N
HA25EM	36	5.5	23.5	70	147.8	57	100	50	M8×1.25×10	6.8	6.5	126	13	30.5	11	M6×0.75	6	11
HA30EM	42	7.5	31	90	177.2	72	120	60	M10×1.5×12	8.6	9	149	14.5	34.5	11	M6×0.75	6.5	11
HA35EM	48	7.5	33	100	203.6	82	140	70	M10×1.5×13	8.6	9	173	16.5	40.5	12	M6×0.75	8	11
HA45EM	60	10	37.5	120	233.4	100	160	80	M12×1.75×15	10.5	10	197	18.5	50	13	R_C1/8	10	13
HA55EM	70	12	43.5	140	284.4	116	206	103	M14×2×21	12.5	12	245	19.5	58	15	R_C1/8	11	13

Rail dimension							Basic load rating					Ball diameter	Weight	
Rail width	Rail height	Bolt pitch	Bolt hole		G	Maximum length	Dynamic	Static	Static moment (N·m)				Ball slide	Rail
W_1	H_1	F	d×D×h	B_3	(recommended)	L_0max	C (N)	C_0 (N)	M_{RO}	M_{PO}	M_{YO}	D_W	(kg)	(kg/m)
23	22	30	7×11×16.5	11.5	20	3 960	54 000	11 500	670	2 060	2 060	3.968	1.6	3.7
28	28	40	9×14×21	14	20	4 000	79 500	166 000	1 140	3 550	3 550	4.762	2.6	5.8
34	30.8	40	9×14×23.5	17	20	4 000	111 000	226 000	1 950	5 650	5 650	5.556	3.8	7.7
45	36	52.5	14×20×27	22.5	22.5	3 990	147 000	295 000	3 700	8 450	8 450	6.350	6.6	12.0
53	43.2	60	16×23×32.5	26.5	30	3 960	232 000	445 000	6 500	15 400	15 400	7.937	11	17.2

www.bergab.ru Берг АБ bergab@ya.ru Тел. (495)-228-06-21, факс (495) 223-3071

www.bergab.ru Берг АБ bergab@ya.ru Тел. (495)-228-06-21, факс (495) 223-3071

Two HS Type linear guides are available in the High-Accuracy Series: AL Type and EM Type, any of which can be selected for specific applications.

Fig. 17 AL Type

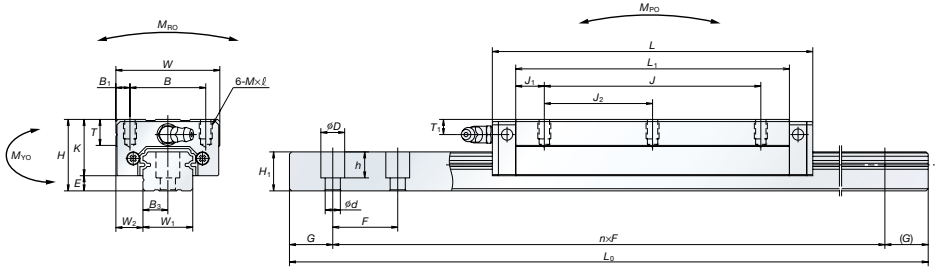

Fig. 18 EM Type

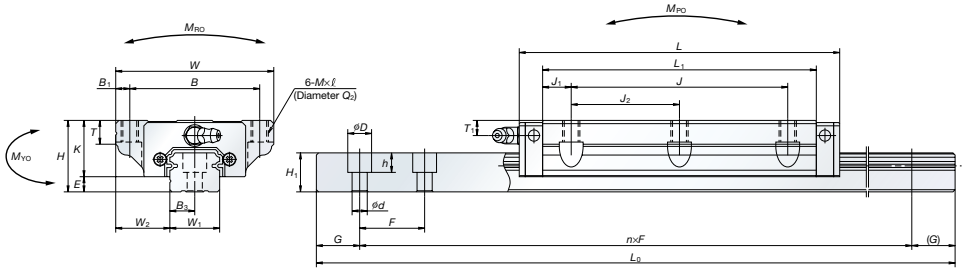

Table 8 Assembly dimensions for AL Type

Model No.	Assembly dimension			Ball slide dimension																					
	Height			Width	Length	Hole position			Tapped hole							Grease nipple			Rail width	Rail height	Bolt pitch	Bolt hole		G (recommended)	Maximum length	Dynamic	Static	Static moment (N·m)			Ball diameter	Weight	
	H	E	W_2	W	L	B	J	J_2	M×pitch×ℓ	B_1	L_1	J_1	K	T	Mounting hole	T_1	N	W_1	H_1	F	d×D×h	B_3		L_0max	C (N)	C_0 (N)	M_{RO}	M_{PO}	M_{YO}	D_W	Ball slide (kg)	Rail (kg/m)
HS15AL	24	4.6	9.5	34	106	26	60	30	M4×0.7×6	4	89.2	14.6	19.4	10	ϕ3	6	3	15	12.5	30	(*) 3.5×6×8.5 4.5×7.5×8.5	7.5	20	2 000 (1 700)	15 300	40 000	199	395	335	2.778	0.34	1.4
HS20AL	28	6	11	42	119.7	32	80	40	M5×0.8×7	5	102.5	11.25	22	12	M6×0.75	5.5	11	20	15.5	30	6×9.5×10.5	10	20	3 960 (3 500)	20 400	52 000	350	590	495	3.175	0.52	2.3
HS25AL	33	7	12.5	48	148	35	100	50	M6×1×9	6.5	126.4	13.2	26	12	M6×0.75	7	11	23	18	30	7×11×12	11.5	20	3 960 (3 500)	32 000	78 000	605	1 090	910	3.968	0.85	3.1
HS30AL	42	9	16	60	176.1	40	120	60	M8×1.25×12	10	150.7	15.35	33	13	M6×0.75	8	11	28	23	40	7×11×16	14	20	4 000 (3 500)	51 500	127 000	1 190	2 120	1 780	4.762	1.7	4.8
HS35AL	48	10.5	18	70	203.6	50	140	70	M8×1.25×12	10	175.6	17.8	37.5	14	M6×0.75	8.5	11	34	27.5	40	9×14×20	17	20	4 000 (3 500)	71 500	172 000	1 980	3 350	2 820	5.556	2.5	7.0

(*) The standard rail mounting bolt hole for HS15 is specified as the hole for M3 (3.5×6×8.5). Please contact us to request a different hole for M4 (4.5×7.5×8.5). Dimensions in parentheses apply to stainless steel models.

Table 9 Assembly dimensions for EM Type

Model No.	Assembly dimension			Ball slide dimension																					
	Height			Width	Length	Hole position			Tapped hole	Drill hole						Grease nipple			Rail width	Rail height	Bolt pitch	Bolt hole		G (recommended)	Maximum length	Dynamic	Static	Static moment (N·m)			Ball diameter	Weight	
	H	E	W_2	W	L	B	J	J_2	M×pitch×ℓ	Diameter Q_2	B_1	L_1	J_1	K	T	Mounting Hole	T_1	N	W_1	H_1	F	d×D×h	B_3		L_0max	C (N)	C_0 (N)	M_{RO}	M_{PO}	M_{YO}	D_W	Ball slide (kg)	Rail (kg/m)
HS15EM	24	4.6	18.5	52	106	41	60	30	M5×0.8×7	4.4	5.5	89.2	14.6	19.4	8	ϕ3	6	3	15	12.5	30	(*) 3.5×6×8.5 4.5×7.5×8.5	7.5	20	2 000 (1 700)	15 300	40 000	199	395	335	2.778	0.45	1.4
HS20EM	28	6	19.5	59	119.7	49	80	40	M6×1.0×9 (M6×1.0×9.5)	5.3	5	102.5	11.25	22	10	M6×0.75	5.5	11	20	15.5	30	6×9.5×10.5	10	20	3 960 (3 500)	20 400	52 000	350	590	495	3.175	0.67	2.3
HS25EM	33	7	25	73	148	60	100	50	M8×1.25×10 (M8×1.25×11.5)	6.8	6.5	126.4	13.2	26	11 (12)	M6×0.75	7	11	23	18	30	7×11×12	11.5	20	3 960 (3 500)	32 000	78 000	605	1 090	910	3.968	1.3	3.1
HS30EM	42	9	31	90	176.1	72	120	60	M10×1.5×12 (M10×1.5×14.5)	8.6	9	150.7	15.35	33	11 (15)	M6×0.75	8	11	28	23	40	7×11×16	14	20	4 000 (3 500)	51 500	127 000	1 190	2 120	1 780	4.762	2.4	4.8
HS35EM	48	10.5	33	100	203.6	82	140	70	M10×1.5×13 (M10×1.5×14.5)	8.6	9	175.6	17.8	37.5	12 (15)	M6×0.75	8.5	11	34	27.5	40	9×14×20	17	20	4 000 (3 500)	71 500	172 000	1 980	3 350	2 820	5.556	3.4	7.0

(*) The standard rail mounting bolt hole for HS15 is specified as the hole for M3 (3.5×6×8.5). Please contact us to request a different hole for M4 (4.5×7.5×8.5). Dimensions in parentheses apply to stainless steel models.

www.bergab.ru Берг АБ bergab@ya.ru Тел. (495)-228-06-21, факс (495) 223-3071

www.bergab.ru Берг АБ bergab@ya.ru Тел. (495)-228-06-21, факс (495) 223-3071

MOTION & CONTROL™
NSK

New Type of Rolling Element Linear Motion Bearing

Translide™

Extended lineup with individual parts for rails and sliders available for purchase. Innovative rolling element linear motion bearing achieves superior cost effectiveness. Standard features include NSK K1™ lubrication unit and high performance seal; especially suitable for transport equipment.

Patent Pending

tended ne p New!

www.bergab.ru Берг АБ bergab@ya.ru Тел. (495)-228-06-21, факс (495) 223-3071

www.bergab.ru Берг АБ bergab@ya.ru Тел. (495)-228-06-21, факс (495) 223-3071

New Type of Rolling Element Linear Motion Bearing—Translide™

Translide™, a new type of rolling element linear motion bearing, is well suited to transportation equipment; for example, manufacturing lines of automobiles, automobile parts, and the like. It defies all traditional understanding within the industry in every aspect, and is surely a landmark in the progress of linear motion bearing technology.

1 Features

Inexpensive ····· Newly developed manufacturing process of rail, and design review of ball slide contribute to substantial cost reductions.

High capacity ····· Optimum ball diameter for higher capacity design.

High dust proof capability ····· Dust-tight high performance end seals, bottom seals, and inner seals are built-in as a standard feature. (Optional protector is available for protection against hot debris such as welding spatters or hard contamination.)

Maintenance free ····· NSK K1™ lubrication unit is equipped as a standard specification for long-term maintenance-free operation.

Rust prevention ····· NSK provides a lineup of products with antirust surface treatment for corrosive environments.

Interchangeable rails and ball slides (New product) ····· Launched interchangeable type of rails and ball slides for random matching.

2 Structure

Enhanced dustproof design and simple structure has contributed toward longer life. (Refer to Fig. 1)

Balls are glued to the tracks in order to take this picture.

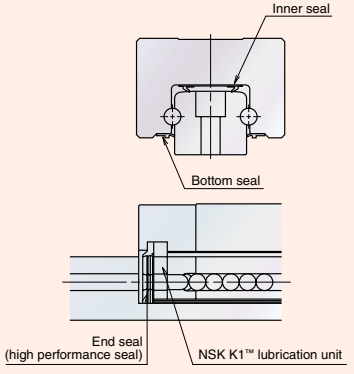

Fig. 1 Structure

3 Accuracy and Clearance

Accuracy grade: Normal grade for transportation **Running parallelism:** 100 μm or less **Clearance:** 60 μm or less

4 Application

Suitable for transporting equipment ····· Automobile manufacturing, machine tools (loader/un-loader), tire manufacturing equipment, woodworking machines, automatic doors, and the like.

5 Reference Number

Reference numbers are assigned to identify a Translide after finalizing all specifications. These reference numbers will be shown on a specification drawing. Please specify the reference number to identify the product when ordering.

5.1 Assembled Type

Example: TS 30 2400 AN P 2 - ** KL S

- TS — Translide
- 30 — Model number
- 2400 — Rail length (mm)
- AN — Shape code of ball slide
- P — Surface treatment/Rails design code
  - P: No surface treatment/Counterbores on a rail top face (Type I)
  - V: No surface treatment/Tapped holes on a rail bottom face (Type II)
  - R: Fluoride low temperature chrome plating/Counterbores on the top face of rail (Type I)
  - W: Fluoride low temperature chrome plating/Tapped holes on the bottom face of rail (Type II)
- 2 — Number of ball sliders assembled to a rail
- ** — Design serial number
- KL — Accuracy grade KL: Normal grade for transportation
- S — Preload code S: Clearance of 60 μm or less

5.2 Interchangeable

(1) Interchangeable ball slide

Example: TAS 30 AN - F

- TAS — Translide: Interchangeable ball slide
- 30 — Model number
- AN — Shape code of ball slide
- F — No code: No surface treatment + AV2 Grease
  - F: Fluoride low temperature chrome plating + AV2 Grease
  - F50: Fluoride low temperature chrome plating + LG2 Grease

(2) Interchangeable rail

Example: T1S 30 2400 L P N T ** PL S

- T1S — Translide: Interchangeable rail
- 30 — Model number
- 2400 — Rail length (mm)
- P — Surface treatment/Rail design code
  - P: No surface treatment/Counterbores on a rail top face (Type I)
  - V: No surface treatment/Tapped holes on a rail bottom face (Type II)
  - R: Fluoride low temperature chrome plating/Counterbores on a rail top face (Type I)
  - W: Fluoride low temperature chrome plating/Tapped holes on a rail bottom face (Type II)
- N — Butting rail code
  - N: No butting
  - L: Rail for butting
- ** — Design serial number
- PL — Accuracy grade PL: Normal grade for transportation
- S — Clearance code S: Clearance of 60 μm or less

www.bergab.ru Берг АБ bergab@ya.ru Тел. (495)-228-06-21, факс (495) 223-3071

www.bergab.ru Берг АБ bergab@ya.ru Тел. (495)-228-06-21, факс (495) 223-3071

6 Dimensions

6.1 Assembled Type

Dimensions are shown in Table 1.

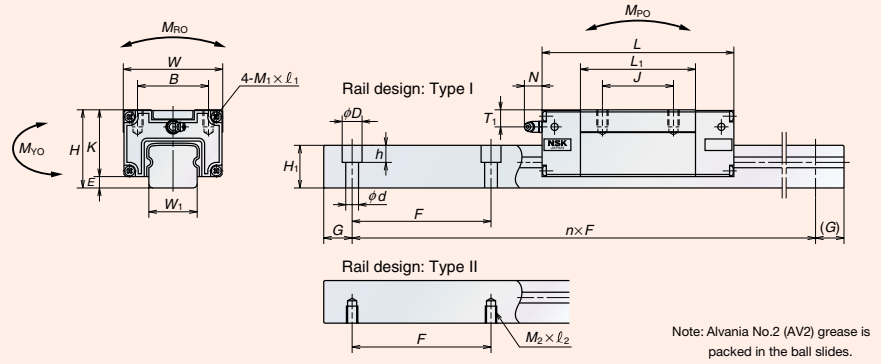

Note: Alvania No.2 (AV2) grease is packed in the ball slides.

6.2 Interchangeable Type

(1) Interchangeable ball slide

Refer to Table 1 for details of dimensions.

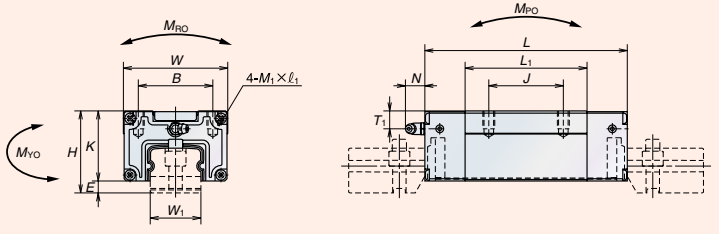

(2) Interchangeable rail

Refer to 6.1 Assembled Type for rail type, and Table 1 for details of dimensions.

7 Result of Endurance Test

Deterioration in surface roughness is not observed on ball tracks of a rail after running the distance of the estimated life. (Refer to Fig. 2)

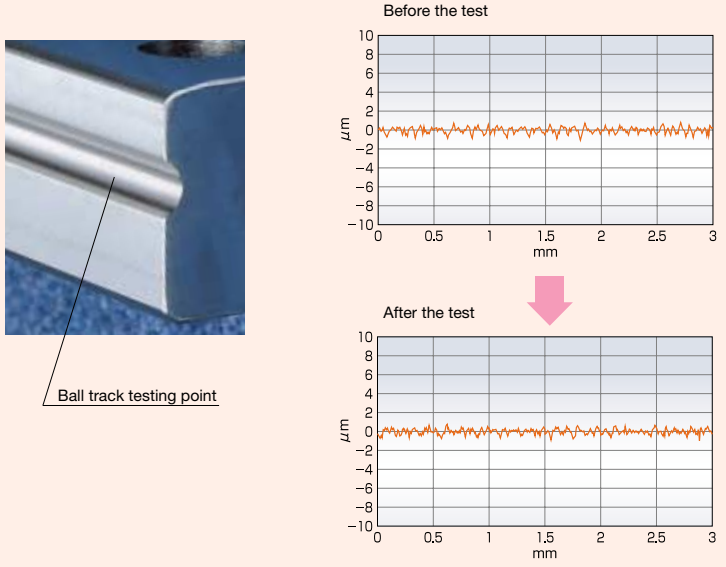

Fig. 2 Comparison of surface roughness before and after the test

Precautions for using Translide™

Please follow the precautions below for your safety.

- Ambient temperature: 50°C maximum (80°C, instantaneous), Maximum speed: 200 m/min.
- Allowable mounting accuracy: Parallelism of two sets: 100 μm, Height variation of two sets: 500 μm/500 mm.
- Consult with NSK when using a Translide in a single rail configuration.
- Be sure to take safety measures against falling loads if you mount a Translide upside down.
- Never use in an environment where degreasing solvents are present.
- Balls fall out if a ball slide is removed from a rail. Use a provisional rail if you need to dismount a ball slide from a rail. NSK assembles interchangeable ball slides on provisional rails for shipping. Take great care when inserting a ball slide in a rail.

Table 1 Dimensions

Unit: mm

Model number	Assembly		Ball slide													Rail				Basic load rating					Ball diameter	Mass	
	Height		Width	Length	Tapped hole					Grease fitting			Width	Height	Pitch	Type I	Type II	G	Max. length	Dynamic	Static	Allowable static moment load (N·m)				Ball slide	Rail
	$H^{\pm 0.1}$	E	W	L	B	J	$M_1 \times$ Pitch $\times \ell_1$	L_1	K	Screw size	T_1	N	W_1	H_1	F	$d \times D \times h$	$M_2 \times$ Pitch $\times \ell_2$	(Recommended)	L_{0max}*	C (N)	C_0 (N)	M_{R0}	M_{P0}	M_{Y0}	D_w	(kg)	(kg/m)
TS15AN	28	3	34	72.2	26	26	M4 × 0.7 × 6	39	25	φ3	6.5	(5)	15	14	120	4.5 × 7.5 × 5.3	M4 × 0.7 × 6	20	1 960	9 800	11 800	92	64	64	3.968	0.21	1.5
TS20AN	30	3	44	87	32	36	M5 × 0.8 × 8	50	27	M6 × 0.75	6.5	(14)	20	15	120	6 × 9.5 × 8.5	M5 × 0.8 × 8	20	2 920	15 700	19 100	196	137	137	4.762	0.37	2.1
TS25AN	40	4	48	100	35	35	M6 × 1 × 9	58	36	M6 × 0.75	9.5	(14)	23	20	120	7 × 11 × 9	M6 × 1 × 9	20	4 000	21 800	26 000	320	217	217	5.556	0.47	3.4
TS30AN	45	6.5	60	115	40	40	M8 × 1.25 × 10	70	38.5	M6 × 0.75	9.5	(14)	28	25	160	9 × 14 × 12	M8 × 1.25 × 12	20	4 040**	31 000	37 500	565	395	395	6.350	0.77	5.3
TS35AN	55	8	70	135.8	50	50	M8 × 1.25 × 12	81.8	47	M6 × 0.75	12	(14)	34	30	160	9 × 14 × 12	M8 × 1.25 × 12	20	4 040**	46 500	53 000	970	635	635	7.937	1.3	7.7

* For a rail over the maximum length, rails for butting connection are available. Please consult with NSK.
** The maximum length of fluoride low temperature chrome plated products is 4 000 (G=80).

The basic dynamic load rating C is a load that furnishes 50 km rating fatigue life; it is a vertical and constant load to the ball slide mounting surface. To convert C to C100 for a 100 km fatigue life, divide C by 1.26.

www.bergab.ru Берг АБ bergab@ya.ru Тел. (495)-228-06-21, факс (495) 223-3071

www.bergab.ru Берг АБ bergab@ya.ru Тел. (495)-228-06-21, факс (495) 223-3071

MOTION & CONTROL™
NSK

NSK Linear Guides™ for Contaminated Environments

V1 Series

NSK's advanced, high-performance seal dramatically reduces the entry of fine contaminants to less than one-tenth of existing products and provides five-times longer service life.

New!

Patent Pending

www.bergab.ru Берг АБ bergab@ya.ru Тел. (495)-228-06-21, факс (495) 223-3071

www.bergab.ru Берг АБ bergab@ya.ru Тел. (495)-228-06-21, факс (495) 223-3071

With dramatically improved sealing performance, the V1 Series delivers outstanding functionality and long operating life under contaminated environments.

NSK V1 Series linear guides are designed to dramatically improve sealing capability for machinery such as equipment used for woodworking and graphite milling, which is exposed to fine particles and requires protection against the entry of fine contaminants. By adopting high-performance seals and the proven NSK K1, the V1 Series reduces the entry of fine contaminants into ball slides to less than one-tenth of existing products and realizes outstanding lubrication performance. Operating life is five times longer in dusty environments.
As a result, the V1 Series linear guides are extremely reliable and demonstrate excellent capability in contaminated environments.

Applications

- Woodworking machines
- Graphite milling machines
- Buff polishers for tires
- Laser cutting machines
- Welding lines
- Conveyers and others

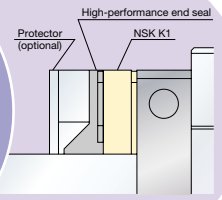

Structure of V1 Series

Features

Comparison with NSK standard products:

Less than 1/10 the level of fine contaminants

Results of dust-proof tests reveal that the entry of fine contaminants is reduced to less than one-tenth of existing standard series due to improvements in sealing capability.

Test conditions

Specimen	VH30AN
Speed	16.7 mm/sec
Foreign matter	Graphite powder (average grain size: 0.037 mm) and Grease

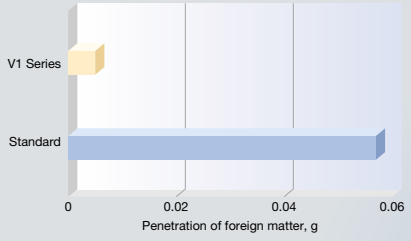

Operating life under contaminated environments is more than 5 times longer

Durability test with rubber fragments

Extreme durability tests under contaminated environments using rubber fragments show that durability of the V1 Series extended more than five times longer than the existing standard series, as shown in the graph.

Test conditions

Specimen	VH30AN, preload with Z1 (preload of 245 N)
Rail orientation	Horizontal (wall mount)
Speed	500 mm/sec
Lubrication	Grease (charged only at the beginning)
Foreign matter	Rubber fragments

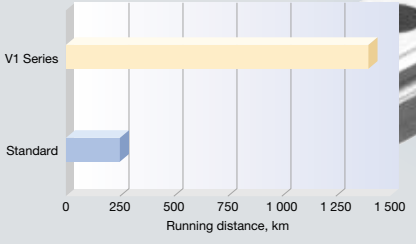

Durability test with fine wood particles

Extreme durability tests in a contaminated environment using fine wood particles show that durability of the V1 Series is more than doubled compared to the standard series, as shown in the graph.

Test conditions

Specimen	VH30AN, preload with Z1 (preload of 3 200 N)
Rail orientation	Horizontal (wall mount)
Feed rate	400 mm/sec
Lubrication	Grease (charged only at the beginning)
Foreign matter	Fine wood particles

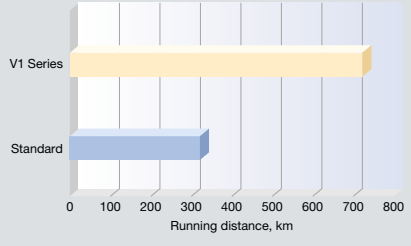

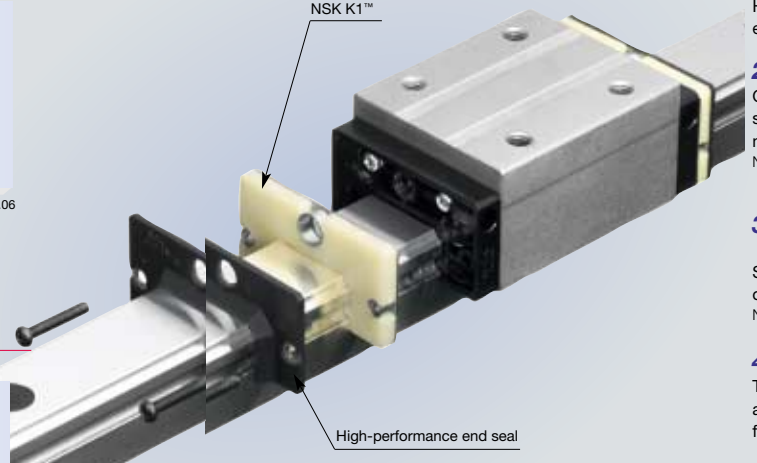

Before passage of ball slide
(Significant foreign matter remains after passage of the slider)

After passage of ball slide
(All foreign matter is swept away)

Because poor sealing capability allows foreign matter to enter the slider, foreign matter remains on the rail after the slider passes.

Specifications

1. High-performance end seals

High-performance side seals with a multi-lip structure prevent the entry of various foreign matters.

2. NSK K1™ lubrication unit (standard)

Outstanding lubrication support of NSK K1™ further improves sealing capability and durability. Additional NSK K1™ units can be mounted for specific usage conditions and environments.
Note: Two K1™ units, one at each end, are mounted as standard equipment on each ball slide of the V1 Series.

3. Caps for rail mounting holes enhance sealing performance

Sealing the holes for mounting bolts to eliminate the accumulation of foreign matter prevents the entry of contaminants into ball slides.
Note: Bolt hole caps are packed in linear guides prior to delivery.

4. Surface treatment

Two types of surface treatment that are optimum for linear guides are available: low-temperature chrome plating and low-temperature fluorinated chrome plating.

5. Protector (optional)

Non-contact metal protectors can be installed on the exterior of the end seal to protect the seal from heat and hard dust particles.

6. Tapped holes on a rail bottom face (optional)

In addition to standard mounting bolt holes (counterbores on a rail top face), a specification for tapped holes on a rail bottom face for enhanced sealing capability is available for the V1 Series.

Notes:

- Accuracy grade is compatible with high grade (K6) and normal grades (KN and KC)
- Minimum rail length for production is 400 mm.
- Tapping pitch is the same as the pitch for regular mounting bolt holes. Please refer to the dimensions provided in Table 10–12.
- Estimate the length of the bolt by adding 2–5 mm extra length to the effective depth of tapping.

www.bergab.ru Берг АБ bergab@ya.ru Тел. (495)-228-06-21, факс (495) 223-3071

www.bergab.ru Берг АБ bergab@ya.ru Тел. (495)-228-06-21, факс (495) 223-3071

Reference number

The reference number may be used as a guide prior to finalizing specifications. The components of the reference number represent particular specifications; therefore when requesting estimates or inquiring about specifications, please refer to the reference number, except the design number. The reference numbers also identify single rail specifications. At least two sets of reference numbers are required for multiple rails.

Example: VH 30 1000 AN C 2 - ＊＊ K5 1 - Ⅱ

- Series name
- Size No.
- Rail length (mm)
- Ball slide shape code: refer to Table 1
- Material/surface treatment code: refer to Table 3
- Number of ball slides per rail
- Design serial number
- Accuracy grade code: refer to Table 4
- Preload code: refer to Table 5
- No code: single rail; Ⅱ: two rails*

* Please note that the appropriate design number will be inserted into the reference number and the end code (-Ⅱ) will be omitted.

Table 1 V1 Series product line

Assembly height	Length of ball slides	Ball slide shape code/mounting code			
		Square type	Flange type		
		Tapped mounting holes	Tapped mounting holes	Bolt mounting hole	For both tapped and bolt mounting holes
High type	Standard (high load)	AN	—	—	—
	Long (super high load)	BN	—	—	—
Low type	Standard (high load)	AL	EL	FL	EM
	Long (super high load)	BL	GL	HL	GM

Table 2 Ball slide mounting methods

Square type	Flange type		
Tapped mounting holes	Tapped mounting holes	Bolt mounting hole	For both tapped and bolt mounting holes

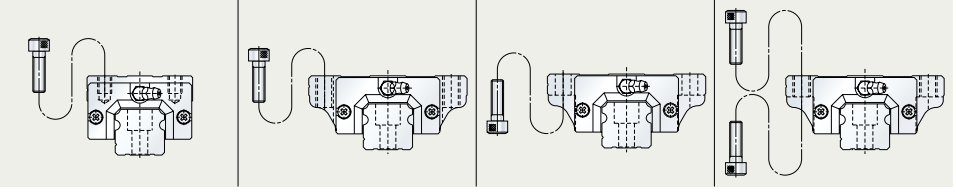

Table 3 Material and surface treatment

Code	Content	Code	Content
C	Special carbon steel (NSK standard) + counterbores on a rail top face	V	Special carbon steel (NSK standard) + tapped holes on a rail bottom face
K	Stainless steel + counterbores on a rail top face	J	Stainless steel + tapped holes on a rail bottom face
D	Special carbon steel + surface treatment + counterbores on a rail top face	W	Special carbon steel + surface treatment + tapped holes on a rail bottom face
H	Stainless steel + surface treatment + counterbores on a rail top face	S	Stainless steel + surface treatment + tapped holes on a rail bottom face
Z	Others, special	Only VH15, 20, 25 and 30 are available with stainless steel.	

Table 4 Accuracy grade

Preloaded assembly types					Interchangeable types
Ultra super precision	Super precision	High precision	Precision	Normal	Normal
K3	K4	K5	K6	KN	KC

Table 5 Preload types

Preloaded assembly types			Interchangeable type	
Medium preload	Slight preload	Fine clearance	Slight preload	Normal
Z3	Z1	Z0	ZZ	ZT

Z is omitted in the reference number.

Table 6 Range of rail production

Unit: mm

Material \ Size	15	20	25	30	35	45	55
Special carbon steel	2 000	3 960	3 960	4 000	4 000	3 990	3 960
Stainless steel	1 800	3 500	3 500	3 500	—	—	—

Rails for butting connections may be used for rail lengths that exceed the above limitation. Please consult with NSK.

Accuracy

Table 7 Accuracy standard for preloaded assembly types

Unit: μm

Item \ Accuracy Grade	Ultra super precision K3	Super precision K4	High precision K5	Precision K6	Normal KN
Mounting height H	±10	±10	±20	±40	±80
Variations of mounting height H (All ball slides on a pair of rails)	3	5	7	15	25
Mounting width dimensions W_2 or W_3	±15	±15	±25	±50	±100
Variation of mounting width dimensions W_2 or W_3 (All ball slides on datum rails)	3	7	10	20	30
Running parallelism of face C against face A Running parallelism of face D against face B	Refer to Table 9, Fig. 1 and Fig. 2				

Table 8 Accuracy standard for interchangeable type

Unit: μm

Accuracy grade	Normal KC	
Item \ Types	VH15, 20, 25, 30, 35	VH45, 55
Mounting H	±20	±30
Variation of mounting height H (one rail)	15	20
Variation of mounting height H (multiple rails)	30	35
Mounting width dimension W_2 or W_3	±30	±35
Variation of mounting width dimension W_2 or W_3	25	30
Running parallelism of face C against face A Running parallelism of face D against face B	Refer to Table 9, Fig. 1 and Fig. 2	

Fig. 1 Drawing for accuracy standard (mounting with W_2)

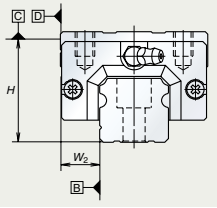

Fig. 2 Drawing for accuracy standard (mounting with W_3)

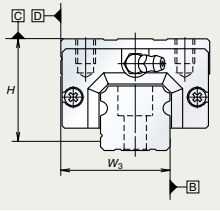

Table 9 Running parallelism tolerance

Unit: μm

Rail length (mm) over	or less	Accuracy grade: Preloaded assembly types K3	K4	K5	K6	KN	Interchangeable type KC
	50	2	2	2	4.5	6	6
50—	80	2	2	3	5	6	6
80—	125	2	2	3.5	5.5	6.5	6.5
125—	200	2	2	4	6	7	7
200—	250	2	2.5	5	7	8	8
250—	315	2	2.5	5	8	9	9
315—	400	2	3	6	9	11	11
400—	500	2	3	6	10	12	12
500—	630	2	3.5	7	12	14	14
630—	800	2	4.5	8	14	16	16
800—	1 000	2.5	5	9	16	18	18
1 000—	1 250	3	6	10	17	20	20
1 250—	1 600	4	7	11	19	23	23
1 600—	2 000	4.5	8	13	21	26	26
2 000—	2 500	5	10	15	22	29	29
2 500—	3 150	6	11	17	25	32	32
3 150—	4 000	9	16	23	30	34	34

Handling Precautions

- Observe the following precautions to maintain the long-term efficiency of the high performance seals:
  1. Permissible temperature range ····· Maximum operating temperature: 50°C
     Maximum instantaneous peak temperature: 80°C
  2. Chemical precautions ····· Never leave the linear guide near grease-removing organic solvents such as hexane or thinner. Never immerse the the linear guide in kerosene or rust preventive oils which contain kerosene.
- Carefully remove ball slides from the rails, as the balls can fall out. When the rails are tilted without the stopper, the ball slides may move along the rail and fall out.
- When ball slides are used upside down (for example, when the rails are attached to the ceiling with the ball slides down), take special precautions such as installing a safety device to prevent the ball slides from falling.

www.bergab.ru Берг АБ bergab@ya.ru Тел. (495)-228-06-21, факс (495) 223-3071

www.bergab.ru Берг АБ bergab@ya.ru Тел. (495)-228-06-21, факс (495) 223-3071

VH-AL (high load/low type)
VH-AN (high load/high type)
VH-BL (super high load/low type)
VH-BN (super high load/high type)

Example: **VH 30 1000 AN C 2 - ＊＊ K5 1 - Ⅱ**

- Series name
- Size No.
- Rail length (mm)
- Ball slide shape code: refer to Table 1
- Material/surface treatment code: refer to Table 3
- Number of ball slides per rail
- Accuracy grade code: refer to Table 4
- Design serial number
- Preload code: refer to Table 5
- No code: single rail; Ⅱ: two rails*

* Please note that the appropriate design number will be inserted into the reference number and the end code (-Ⅱ) will be omitted.

● Without protector

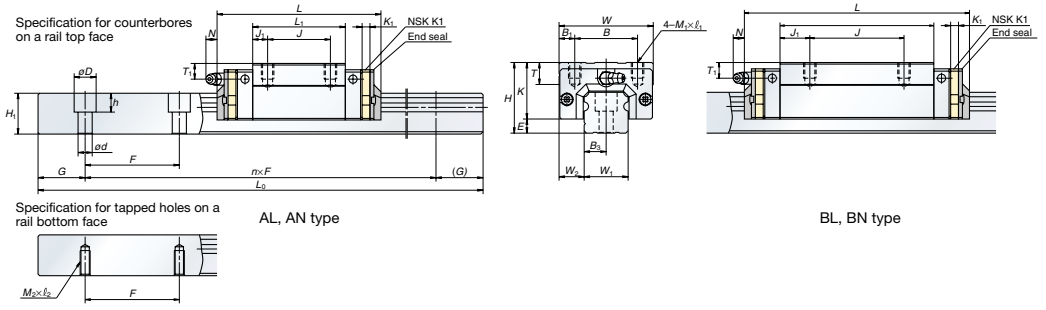

AL, AN type

BL, BN type

● With protector

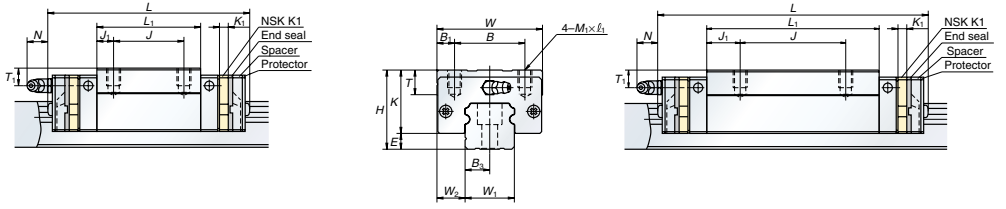

AL, AN type

BL, BN type

Table 10 Dimensions

Unit: mm

Model No.	Assembly Height H	Assembly E	Assembly W_2	Roller slide Width W	Roller slide Length L	Tapped mounting hole B	Tapped mounting hole J	Tapped mounting hole M_1×Pitch×ℓ_1	B_1	L_1	J_1	K	T	K_1	Grease nipple Mounting hole	Grease nipple T_1	Grease nipple N
VH15AN	28	4.6	9.5	34	70.6〈 77〉	26	26	M4×0.7×6	4	39	6.5	23.4	8	4.5	ϕ3	8.5	1 〈 8.2〉
VH15BN					89.6〈 96〉					58	16						
VH20AN	30	5	12	44	87.4〈 94.2〉	32	36	M5×0.8×6	6	50	7	25	12	4.5	M6×0.75	5	11.1 〈12.3〉
VH20BN					109.4〈116.2〉		50			72	11						
VH25AL	36	7	12.5	48	97 〈104.4〉	35	35	M6×1×6	6.5	58	11.5	29	12	5	M6×0.75	6	9.6 〈12.9〉
VH25AN	40							M6×1×9				33				10	
VH25BL	36				125 〈132.4〉		50	M6×1×6		86	18	29				6	
VH25BN	40							M6×1×9				33				10	
VH30AL	42	9	16	60	104.4〈114.8〉	40	46	M8×1.25×8	10	59	9.5	33	14	5	M6×0.75	7	11.4 〈14.2〉
VH30AN	45							M8×1.25×10				36				10	
VH30BL	42				143.4〈153.8〉		60	M8×1.25×8		98	19	33				7	
VH30BN	40							M8×1.25×10				36				10	
VH35AL	48	9.5	18	70	128.8〈139.2〉	50	50	M8×1.25×8	10	80	15	38.5	15	5.5	M6×0.75	8	10.9 〈13.7〉
VH35AN	55							M8×1.25×12				45.5				15	
VH35BL	48				162.8〈173.2〉		72	M8×1.25×8		114	21	38.5				8	
VH35BN	55							M8×1.25×12				45.5				15	
VH45AL	60	14	20.5	86	161.4〈174.2〉	60	60	M10×1.5×13	13	105	22.5	46	17	6.5	Rc1/8	10	12.5 〈14.1〉
VH45AN	70							M10×1.5×17				56				20	
VH45BL	60				193.4〈206.2〉		80	M10×1.5×13		137	28.5	46				10	
VH45BN	70							M10×1.5×17				56				20	
VH55AL	70	15	23.5	100	185.4〈198.2〉	75	75	M12×1.75×12	12.5	126	25.5	55	18	6.5	Rc1/8	11	12.5 〈14.1〉
VH55AN	80							M12×1.75×18				65				21	
VH55BL	70				223.4〈236.2〉		95	M12×1.75×12		164	34.5	55				11	
VH55BN	80							M12×1.75×18				65				21	

Model No.	Rail width W_1	Rail height H_1	Rail Pitch F	Rail Counterbore d×D×h	Rail Tapped hole M_2×Pitch×ℓ_2	Rail B_3	Rail G (recommended)	Rail Maximum length L_{0max}	Basic load rating Dynamic C(N)	Basic load rating Static C_0(N)	Static moment (N·m) M_{R0}	Static moment (N·m) M_{P0}	Static moment (N·m) M_{Y0}	Ball diameter D_W	Weight Ball slide (kg)	Weight Rail (kg/m)
VH15AN	15	15	60	4.5×7.5×5.3	M5×0.8×8	7.5	20	2 000	10 800	20 700	108	95	80	3.175	0.18	1.6
VH15BN								[1 800]	14 600	32 000	166	216	181		0.26	
VH20AN	20	18	60	6×9.5×8.5	M6×1×10	10	20	3 960	17 400	32 500	219	185	155	3.968	0.33	2.6
VH20BN								[3 500]	23 500	50 500	340	420	355		0.48	
VH25AL	23	22	60	7×11×9	M6×1×12	11.5	20	3 960	25 600	46 000	360	320	267	4.762	0.46	3.6
VH25AN								[3 500]							0.55	
VH25BL									34 500	71 000	555	725	610		0.69	
VH25BN															0.82	
VH30AL	28	26	80	9×14×12	M8×1.25×15	14	20	4 000	31 000	51 500	490	350	292	5.556	0.69	5.2
VH30AN								[3 500]							0.77	
VH30BL									46 000	91 500	870	1 030	865		1.16	
VH30BN															1.3	
VH35AL	34	29	80	9×14×12	M8×1.25×17	17	20	4 000	47 500	80 500	950	755	630	6.350	1.2	7.2
VH35AN															1.5	
VH35BL									61 500	117 000	1 380	1 530	1 280		1.7	
VH35BN															2.1	
VH45AL	45	38	105	14×20×17	M12×1.75×24	22.5	22.5	3 990	81 000	140 000	2 140	1 740	1 460	7.937	2.2	12.3
VH45AN															3.0	
VH45BL									99 000	187 000	2 860	3 000	2 520		2.9	
VH45BN															3.9	
VH55AL	53	44	120	16×23×20	M14×2×24	26.5	30	3 960	119 000	198 000	3 600	3 000	2 510	9.525	3.7	16.9
VH55AN															4.7	
VH55BL									146 000	264 000	4 850	51 500	4 350		4.7	
VH55BN															6.1	

Figure inside < > is the dimension when equipped with the protector.
Figure inside [ ] is applied to stainless products.

www.bergab.ru Берг АБ bergab@ya.ru Тел. (495)-228-06-21, факс (495) 223-3071

www.bergab.ru Берг АБ bergab@ya.ru Тел. (495)-228-06-21, факс (495) 223-3071

VH-EL (high load/low type)
VH-GL (super high load/low type)

Example: **VH 30 1000 EL C 2 - ＊＊ K5 1 - Ⅱ**

- Series name
- Size No.
- Rail length (mm)
- Ball slide shape code: refer to Table 1
- Material/surface treatment code: refer to Table 3
- No code: single rail; Ⅱ: two rails*
- Preload code: refer to Table 5
- Accuracy grade code: refer to Table 4
- Design serial number
- Number of ball slides per rail

* Please note that the appropriate design number will be inserted into the reference number and the end code (-Ⅱ) will be omitted.

● Without protector

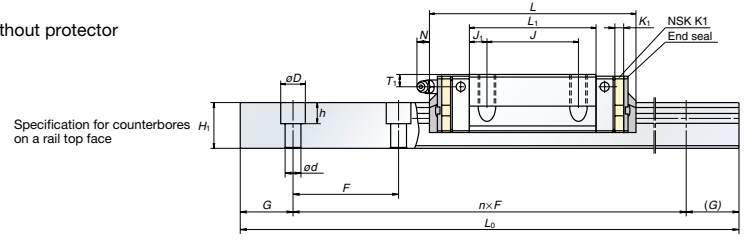

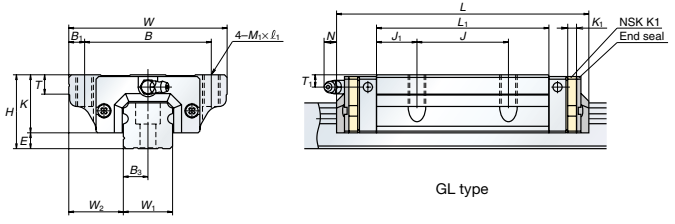

● With protector

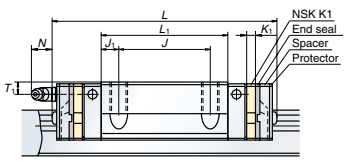

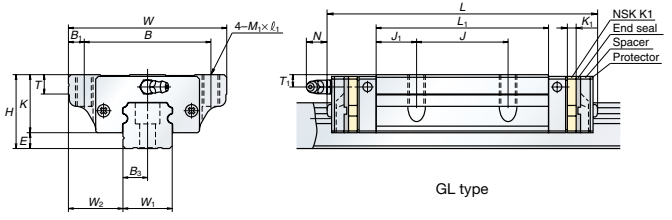

Table 11 Dimensions

Unit: mm

Model No.	Assembly: Height H	E	W_2	Roller slide: Width W	Length L	Tapped mounting hole B	J	M_1×Pitch×ℓ_1	B_1	L_1	J_1	K	T	K_1	Grease nipple: Mounting hole	T_1	N
VH15EL	24	4.6	16	47	70.6 〈 77〉	38	30	M5×0.8×8	4.5	39	4.5	19.4	8	4.5	ϕ3	4.5	1 〈 8.2〉
VH15GL					89.6 〈 96〉					58	14						
VH20EL	30	5	21.5	63	87.4 〈 94.2〉	53	40	M6×1×10	5	50	5	25	10	4.5	M6×0.75	5	11.1 〈12.3〉
VH20GL					109.4 〈116.2〉					72	16						
VH25EL	36	7	23.5	70	97 〈104.4〉	57	45	M8×1.25×16	6.5	58	6.5	29	11	5	M6×0.75	6	9.6 〈12.9〉
VH25GL					125 〈132.4〉			[M8×1.25×12]		86	20.5		[12]				
VH30EL	42	9	31	90	117.4 〈127.8〉	72	52	M10×1.5×18	9	72	10	33	11	5	M6×0.75	7	11.4 〈14.2〉
VH30GL					143.4 〈153.8〉			[M10×1.5×15]		98	23		[15]				
VH35EL	48	9.5	33	100	128.8 〈139.2〉	82	62	M10×1.5×20	9	80	9	38.5	12	5.5	M6×0.75	8	10.9 〈13.7〉
VH35GL					162.8 〈173.2〉					114	26						
VH45EL	60	14	37.5	120	161.4 〈174.2〉	100	80	M12×1.75×24	10	105	12.5	46	13	6.5	Rc1/8	10	12.5 〈14.1〉
VH45GL					193.4 〈206.2〉					137	28.5						
VH55EL	70	15	43.5	140	185.4 〈198.2〉	116	95	M14×2×28	12	126	15.5	55	15	6.5	Rc1/8	11	12.5 〈14.1〉
VH55GL					223.4 〈236.2〉					164	34.5						

Model No.	Rail: Rail width W_1	Rail height H_1	Pitch F	Counterbore d×D×h	Tapped hole M_2×Pitch×ℓ_2	B_3	G (recommended)	Maximum length L_{0max}	Basic load rating: Dynamic C(N)	Static C_0(N)	Static moment (N·m) M_{R0}	M_{P0}	M_{Y0}	Ball diameter D_W	Weight: Ball slide (kg)	Rail (kg/m)
VH15EL	15	15	60	4.5×7.5×5.3	M5×0.8×8	7.5	20	2 000	10 800	20 700	108	95	80	3.175	0.17	1.6
VH15GL								[1 800]	14 600	32 000	166	216	181		0.25	
VH20EL	20	18	60	6×9.5×8.5	M6×1×10	10	20	3 960	17 400	32 500	219	185	155	3.968	0.45	2.6
VH20GL								[3 500]	23 500	50 500	340	420	355		0.65	
VH25EL	23	22	60	7×11×9	M6×1×12	11.5	20	3 960	25 600	46 000	360	320	267	4.762	0.63	3.6
VH25GL								[3 500]	34 500	71 000	555	725	610		0.93	
VH30EL	28	26	80	9×14×12	M8×1.25×15	14	20	4 000	35 500	63 000	600	505	425	5.556	1.2	5.2
VH30GL								[3 500]	46 000	91 500	870	1 030	865		1.6	
VH35EL	34	29	80	9×14×12	M8×1.25×17	17	20	4 000	47 500	80 500	950	755	630	6.350	1.7	7.2
VH35GL									61 500	117 000	1 380	1 530	1 280		2.4	
VH45EL	45	38	105	14×20×17	M12×1.75×24	22.5	22.5	3 990	81 000	140 000	2 140	1 740	1 460	7.937	3.0	12.3
VH45GL									99 000	187 000	2 860	3 000	2 520		3.9	
VH55EL	53	44	120	16×23×20	M14×2×24	26.5	30	3 960	119 000	198 000	3 600	3 000	2 510	9.525	5.0	16.9
VH55GL									146 000	264 000	4 850	5 150	4 350		6.5	

Figure inside < > is the dimension when equipped with the protector.
Figure inside [ ] is applied to stainless products.

www.bergab.ru Берг АБ bergab@ya.ru Тел. (495)-228-06-21, факс (495) 223-3071

www.bergab.ru Берг АБ bergab@ya.ru Тел. (495)-228-06-21, факс (495) 223-3071

VH-FL (high load/low type)
VH-EM (high load/low type)
VH-HL (super high load/low type)
VH-GM (super high load/low type)

Example: **VH 30 1000 FL C 2 - ＊＊ K5 1 - Ⅱ**

- Series name: VH
- Size No.: 30
- Rail length (mm): 1000
- Ball slide shape code: refer to Table 1: FL
- Material/surface treatment code: refer to Table 3: C
- Number of ball slides per rail: 2
- Design serial number: ＊＊
- Accuracy grade code: refer to Table 4: K5
- Preload code: refer to Table 5: 1
- No code: single rail; Ⅱ: two rails*

* Please note that the appropriate design number will be inserted into the reference number and the end code (-Ⅱ) will be omitted.

● Without protector

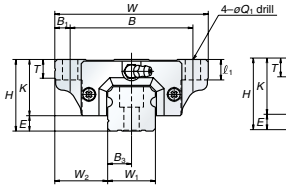

EM, GM type

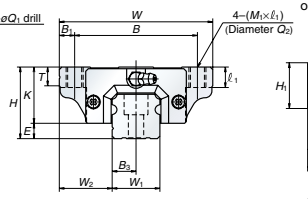

FL, HL type

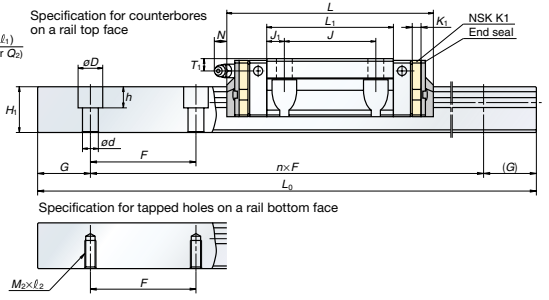

● With protector

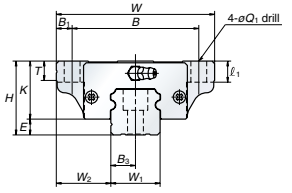

FL, HL type

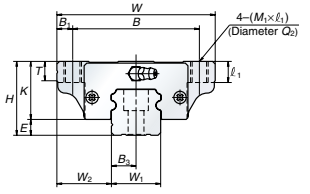

EM, GM type

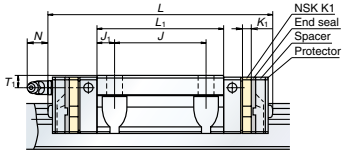

Table 12 Dimensions

Unit: mm

Model No.	Assembly Height H	Assembly E	Assembly W_2	Roller slide Width W	Roller slide Length L	Tapped mounting hole B	Tapped mounting hole J	Tapped mounting hole Q_1×ℓ_1 M_1×Pitch×ℓ_1	Q_2	B_1	L_1	J_1	K	T	K_1	Grease nipple Mounting hole	Grease nipple T_1	Grease nipple N
VH15FL	24	4.6	16	47	70.6〈 77〉	38	30	4.5×7	—	4.5	39	4.5	19.4	8	4.5	φ3	4.5	1 〈 8.2〉
VH15EM								M5×0.8×7	4.4									
VH15HL					89.6〈 96〉			4.5×7	—		58	14						
VH15GM								M5×0.8×7	4.4									
VH20FL	30	5	21.5	63	87.4〈 94.2〉	53	40	6×9.5	—	5	50	5	25	10	4.5	M6×0.75	5	11.1〈12.3〉
VH20EM								M6×1.0×9.5	5.3									
VH20HL					109.4〈116.2〉			6×9.5	—		72	16						
VH20GM								M6×1.0×9.5	5.3									
VH25FL	36	7	23.5	70	97 〈104.4〉	57	45	7×10 [7×11.5]	—	6.5	58	6.5	29	11 [12]	5	M6×0.75	6	9.6〈12.9〉
VH25EM								M8×1.25×10 [M8×1.25×11.5]	6.8									
VH25HL					125 〈132.4〉			7×10 [7×11.5]	—		86	20.5						
VH25GM								M8×1.25×10 [M8×1.25×11.5]	6.8									
VH30FL	42	9	31	90	117.4〈127.8〉	72	52	9×12 [9×14.5]	—	9	72	10	33	11 [15]	5	M6×0.75	7	11.4〈14.2〉
VH30EM								M10×1.5×12 [M10×1.5×14.5]	8.6									
VH30HL					143.4〈153.8〉			9×12 [9×14.5]	—		98	23						
VH30GM								M10×1.5×12 [M10×1.5×14.5]	8.6									
VH35FL	48	9.5	33	100	128.8〈139.2〉	82	62	9×13	—	9	80	9	38.5	12	5.5	M6×0.75	8	10.9〈13.7〉
VH35EM								M10×1.5×13	8.6									
VH35HL					162.8〈173.2〉			9×13	—		114	26						
VH35GM								M10×1.5×13	8.6									
VH45FL	60	14	37.5	120	161.4〈174.2〉	100	80	11×15	—	10	105	12.5	46	13	6.5	Rc1/8	10	12.5〈14.1〉
VH45EM								M12×1.75×15	10.5									
VH45HL					193.4〈206.2〉			11×15	—		137	28.5						
VH45GM								M12×1.75×15	10.5									
VH55FL	70	15	43.5	140	185.4〈198.2〉	116	95	14×18	—	12	126	15.5	55	15	6.5	Rc1/8	11	12.5〈14.1〉
VH55EM								M12×2.0×18	12.5									
VH55HL					223.4〈236.2〉			14×18	—		164	34.5						
VH55GM								M14×2.0×18	12.5									

Rail width W_r	Rail height H_r	Rail Pitch F	Rail Counterbore d×D×h	Rail Tapped hole M_2×Pitch×ℓ_2	B_3	G (recommended)	Maximum length L_{0max}	Basic load rating Dynamic C(N)	Basic load rating Static C_0(N)	Static moment (N·m) M_{R0}	Static moment (N·m) M_{P0}	Static moment (N·m) M_{Y0}	Ball diameter D_W	Weight Ball slide (kg)	Weight Rail (kg/m)
15	15	60	4.5×7.5×5.3	M5×0.8×8	7.5	20	2 000 [1 800]	10 800	20 700	108	95	80	3.175	0.17	1.6
								14 600	32 000	166	216	181		0.25	
20	18	60	6×9.5×8.5	M6×1×10	10	20	3 960 [3 500]	17 400	32 500	219	185	155	3.968	0.45	2.6
								23 500	50 500	340	420	355		0.65	
23	22	60	7×11×9	M6×1×12	11.5	20	3 960 [3 500]	25 600	46 000	360	320	267	4.762	0.63	3.6
								34 500	71 000	555	725	610		0.93	
28	26	80	9×14×12	M8×1.25×15	14	20	4 000 [3 500]	35 500	63 000	600	505	425	5.556	1.2	5.2
								46 000	91 500	870	1 030	865		1.6	
34	29	80	9×14×12	M8×1.25×17	17	20	4 000	47 500	80 500	950	755	630	6.350	1.7	7.2
								61 500	117 000	1 380	1 530	1 280		2.4	
45	38	105	14×20×17	M12×1.75×24	22.5	22.5	3 990	81 000	140 000	2 140	1 740	1 460	7.937	3.0	12.3
								99 000	187 000	2 860	3 000	2 520		3.9	
53	44	120	16×23×20	M14×2×24	26.5	30	3 960	119 000	198 000	3 600	3 000	2 510	9.525	5.0	16.9
								146 000	264 000	4 850	5 150	4 350		6.5	

Figure inside < > is the dimension when equipped with the protector. Figure inside [ ] is applied to stainless products.

www.bergab.ru Берг АБ bergab@ya.ru Тел. (495)-228-06-21, факс (495) 223-3071

Memo

www.bergab.ru Берг АБ bergab@ya.ru Тел. (495)-228-06-21, факс (495) 223-3071

MOTION & CONTROL™
NSK

Precision Machine Components

CAT.No.E3161d

www.bergab.ru Берг АБ bergab@ya.ru Тел. (495)-228-06-21, факс (495) 223-3071

www.bergab.ru Берг АБ bergab@ya.ru Тел. (495)-228-06-21, факс (495) 223-3071

Preface

It is our pleasure to announce the publication of a new catalogue which contains all NSK linear motion products. We believe this publication is one way to show our deep appreciation of your patronage.

Market demand for more sophisticated and diversified machines and equipment is rapidly escalating. NSK precision products are not only used widely in these machines, but also are crucial elements.

In response to this trend, ball screws and NSK linear guides, which are crucial mechanical components of these machines, are required to be highly reliable, maintenance-free, smaller in size and lightweight. They also are expected to heighten efficiency and satisfy uses in special environment.

Publishing a catalogue to introduce our entire product line is especially meaningful under such circumstances. This is an improved version of the previous catalogue; products are categorized, and each product category has two sections. The first section contains an explanation of products and dimension tables for easy selection. The second half is a technical explanation including results of the latest experiments and research to assist thorough technological discussion. Last, “Other,” whose pages are in color, explains special environments and lubrications such as grease, which are general issues for NSK precision products.

We hope abundant NSK products in the new catalogue will be your aide in selecting the most suitable products for your purpose.
We solicit your continued patronage.

It is the principal policy of NSK Ltd. not to export products or technologies which are subject to export prohibition under the Foreign Exchange Law, Foreign Trade Control Law, and other export-related regulations.
Please consult your local NSK representative prior to exporting our product by the unit.

Please give your inquiry NSK representative for the specifications and dimensions of the product shown in this catalog to avoid mistakes caused by the reasons below.
* Specifications and dimensions are subject to change without notice.
* Though every care has been taken to ensure accuracy of the data contained in this catalogue, some errors or omissions may be involved.

www.bergab.ru Берг АБ bergab@ya.ru Тел. (495)-228-06-21, факс (495) 223-3071

Contents

www.bergab.ru Берг АБ bergab@ya.ru Тел. (495)-228-06-21, факс (495) 223-3071

A. NSK Linear Rolling Guide

Characteristics of NSK Linear Rolling Guides A1
Types of NSK Linear Rolling Guides A2

A-Ⅰ Selection Guide to NSK Linear Guides
1. Structure of NSK Linear Guides A7
2. Characteristics of NSK Linear Guides A7
3. Procedures for Selecting Linear Guide A16
4. When Placing Orders A26
5. Model Number and Dimension Table of NSK Linear Guides A28
6. NSK S1™ Series Precision Linear Guides A103
7. MF Series Equipped with NSK K1™ Lubrication Unit A125
8. Linear Guide New Series A137
9. Guide to Technical Services A149
10. Handling Precautions A150

A-Ⅱ Technical Description of NSK Linear Guides
1. Accuracy A151
2. Preload and Rigidity A155
3. Rating Life A163
4. Lubrication A178
5. Dust Proof of Linear Guide A180
6. Rust Prevention and Surface Treatment A193
7. Linear Guides for Special Environment A194
8. Noise A195
9. Arrangement and Mounting of Linear Guide A196
10. Drills to Select Linear Guide A208
11. Reference A221

A-Ⅲ Other Linear Rolling Guide Products
1. Linear Rolling Bushing A223
2. Crossed Roller Guide A234
3. Roller Pack A240
4. Linear Roller Bearings A247
5. Cam Follower A252
6. Roller Follower A259

B. Ball Screws

B-Ⅰ Selection Guide to NSK Ball Screw
1. Features of NSK Ball Screws B1
2. Structure of a Ball Screw B3
3. Ball Screw Classification and Series B7
4. Procedures to Select Ball Screw B16
5. When Placing Orders B31
6. Dimension Table and Reference Number of Standard Stock Ball Screws B37
7. Custom Made Ball Screw Series: Dimension Table and Model Number B307
8. Special Ball Screws: Dimension Table and Model Numbers B417
9. Guide to Technical Services B496
10. Precautions When Handling Ball Screws B497

B-Ⅱ Technical Description of Ball Screws
1. Accuracy B499
2. Static Load Limitation B505
3. Permissible Rotational Speed B509
4. Supporting Conditions for Calculation of Buckling Load and Critical Speed B513
5. Life (dynamic load limitation) B515
6. Preload and Rigidity B518
7. Friction Torque and Drive Torque B523
8. Lubrication of Ball Screw B525
9. Dust Prevention for Ball Screw B526
10. Rust Prevention and Surface Treatment of Ball Screws B526
11. Ball Screw Specifications for Special Environment B527
12. Noise and Vibration B529
13. Installation of Ball Screw B531
14. Precautions for Designing Ball Screw B538
15. Drills for Selecting Ball Screw B540
16. Reference B550

C. Monocarrier™

C-Ⅰ Monocarrier™
1. Features C1
2. Classifications and Series C3
3. Optional Components C5
4. Selection of Monocarrier
4.1. Procedures for Selecting Monocarrier C6
4.2. Rigidity C6
4.3. Maximum Rotational Speed C7
4.4. Accuracy Grade C9
4.5. Stroke and Ball Screw Lead C9
4.6. Basic Load Rating C11
4.7. Estimation of Life Expectancy C13
4.8. Example of Life Estimation C15
5. Maintenance
5.1. Maintenance Method C16
5.2. NSK K1™ Lubrication Unit C17
6. NSK Clean Grease LG2 Specification C18
7. Characteristics and Evaluation Method
7.1. Positioning Accuracy C18
7.2. Repeatability C18
8. Sensor Specification
8.1. Proximity Switch C19
8.2. Photo Sensor C20

C-Ⅱ MCM Series
1. MCM Series Reference Number Coding C23
2. MCM Series Dimension Table of Standard Products C24
3. MCM Series Option Part C35

C-Ⅲ MCH Series
1. MCH Series Reference Number Coding C59
2. MCH Series Dimension Table of Standard Products C60
3. MCH Series Option Part C67

D. Other

1 Special Environments
1. Specifications for Special Environments D1
2. Lubrication and Materials D3
3. Rust Prevention and Surface Treatment D5
4. Measures against Special Environments D7
5. Table to Cope with Special Environments D11
6. Precautions for Handling D12

2 Lubrication
1. Grease Lubrication D13
2. Oil lubrication D18
3. NSK Grease Unit D19

E. Appendices: Tables and Product Index

1 Tables
1. Conversion from International Systems of Units (SI) E1
2. Conversion table between N and kgf E3
3. Conversion table between kg and lb E4
4. Hardness conversion table E5
5. Variations of shaft used in common fits E7
6. Variations of housing holes in common fits E9

2 Product index E11

www.bergab.ru Берг АБ bergab@ya.ru Тел. (495)-228-06-21, факс (495) 223-3071

www.bergab.ru Берг АБ bergab@ya.ru Тел. (495)-228-06-21, факс (495) 223-3071

A BLOCK

NSK Linear Rolling Guide

A-Ⅰ Selection Guide to NSK Linear Guides --- A7
1. Structure of NSK Linear Guides --- A7
2. Characteristics of NSK Linear Guides --- A7
2.1 Types and Characteristics of NSK Linear Guides --- A9
2.2 Models in Each Series and Ball Slide Models --- A15
3. Procedures for Selecting Linear Guide --- A16
3.1 Flow Chart for Selection --- A16
3.2 Selection of Linear Guide Size (Model number) --- A17
3.3 Examples of Linear Guide Selection Size (Model number) --- A21
3.4 Accuracy and Preload --- A22
(1) Accuracy grades and types of preload --- A22
(2) Application examples of accuracy grade and preload --- A24
3.5 Available Length of Rail (Single rail) --- A25
4. Coding for Reference Number of Linear Guides --- A26
4.1 Preloaded assembly --- A26
4.2 Interchangeable type --- A26
5. Model Number and Dimension Table of NSK Linear Guides --- A28
5.1 LH Series --- A28
LH Series (Interchangeable part) --- A35
5.2 LS Series --- A42
LS Series (Interchangeable part) --- A49
5.3 LA Series --- A56
5.4 LY Series --- A66
5.5 LW Series --- A76
LW Series (Interchangeable part) --- A79
5.6 LE Series --- A82
LE Series (Interchangeable part) --- A89
5.7 LU Series (Miniature type) --- A92
LU Series (Interchangeable part) --- A97
5.8 LL Series --- A100
6. NSK S1™ Series Precision Linear Guides --- A103
7. MF Series Equipped with NSK K1™ Lubrication Unit --- A125
(Preloaded assembly and Interchangeable part)
8. Guide to Technical Services --- A149
(1) CAD drawing data
(2) Technical support
9. Handling Precautions --- A150

A-Ⅱ Technical Description of NSK Linear Guides --- A151
1. Accuracy --- A151
1.1 Accuracy Standard --- A151
1.2 Running Parallelism of Ball Slide --- A152
1.3 Accuracy Standard in Each Series --- A153
2. Preload and Rigidity --- A155
2.1 Preload and Rigidity --- A155
2.2 Preload and Rigidity of Each Series --- A156
2.3 Calculating Friction Force by Preload --- A163
3. Rating Life --- A163
3.1 Rating Life and Basic Load Rating --- A163
3.2 How to Calculate Life --- A166
4. Lubrication --- A178
4.1 Lubrication Accessories --- A178
5. Dust Proof of Linear Guide --- A180
5.1 Standard Specification --- A180
5.2 NSK K1™ Lubrication Unit --- A181
5.3 Dust Proof Components --- A181
(1) Double seal --- A182
(2) Protector --- A183
(3) Cap to cover the bolt hole for rail mounting A184
(4) Inner seal --- A185
(5) Bellows --- A185
6. Rust Prevention and Surface Treatment --- A193
7. Linear Guides for Special Environment --- A194
8. Noise --- A195
9. Arrangement and Mounting of Linear Guide --- A196
9.1 Arrangement --- A196
9.2 Mounting Accuracy --- A198
9.3 Installation --- A201
9.4 Assemble Interchangeable Linear Guide --- A206
9.5 Mark for Butting Rails --- A206
9.6 Handling Preloaded Assembly --- A207
10. Drills to Select Linear Guide --- A208
10.1 Single Axis Material Handling System --- A208
10.2 Machining Center --- A213
11. Reference --- A221

A-Ⅲ Other Linear Rolling Guide Products --- A223
1. Linear Rolling Bushing --- A223
2. Crossed Roller Guide --- A234
3. Roller Pack --- A240
4. Linear Roller Bearings --- A247
5. Cam Follower --- A252
6. Roller Follower --- A259

www.bergab.ru Берг АБ bergab@ya.ru Тел. (495)-228-06-21, факс (495) 223-3071

www.bergab.ru Берг АБ bergab@ya.ru Тел. (495)-228-06-21, факс (495) 223-3071

Characteristics of NSK Linear Rolling Guides

The following describes comparative characteristics of rolling and slide guide way, which are the most commonly used.

Comparative characteristics of rolling and sliding guide way

Function	Rolling guide	Sliding guide
Friction	• Friction coefficient: 0.01 or lower • Difference between static and dynamic friction is small. • Change by speed is slight.	• Friction is great. • Static and dynamic friction vary greatly.
Positioning accuracy	• Lost motion is slight. • Stick-slip is slight. • Easy to acheive sub-micron positioning	• Lost motion is great. • Stick-slip at low speed is great. • Difficult to achieve sub-micron positioning
Life	• Possible to estimate life	• Difficult to estimate life
Static rigidity	• Generally high • No play because of preload • Easy-to estimate rigidity	• Rigidity is great against load from a single direction. • There is mechanical play. • Difficult to estimate rigidity
Speed	• Wide range of use from low to high speed.	• Unsuitable for extremely low and high speed
Maintenance, reliability	• Long life through simple maintenance	• Precision is lost greatly by deteriorated guide surface.

In response to the demand for guide with high-speed, high-precision, high-quality, as well as to the demand for easy maintenance, rolling guides which have above features are becoming prevalent.
Utilizing the technology we sharpened in anti-friction rotating bearings, NSK makes various types of linear guides which are highly accurate and reliable.

Characteristics of the NSK linear rolling guides are:

- **Designs are simple and economic. This contributes to high precision and low cost.**
- **Ultra-high purity of materials and superb processing technology assure reliability.**
- **Prompt delivery thanks to interchangeable components and abundant stock.**
- **The user can select the most suitable guide from a wide choice.**

Types of NSK Linear Rolling Guides

Product	Appearance	Features	Major applications
NSK Linear Guide	 MF Series (equipped with lubrication Unit "NSK K1®") main tenance free series Page A125	"NSK K1®" is equipped. Lubricating oil seeps from the special resin, maintaining smooth operation. NSK K1 can be installed in all series listed below.	• Automobile manufacturing equipment • Semiconductor, liquid crystal display manufacturing equipment • Industrial robots • Printing, book binding, paper manufacturing machines • Woodworking and construction machines • Optic and glass production machines • Food and medical equipment • Machine tools • Electric and communication systems

Rigidity ; ◎ : Superb ◎ : Fare ○ : Low

Product	Appearance	Rolling element, etc.	Rigidity	Major applications
NSK Linear Guide	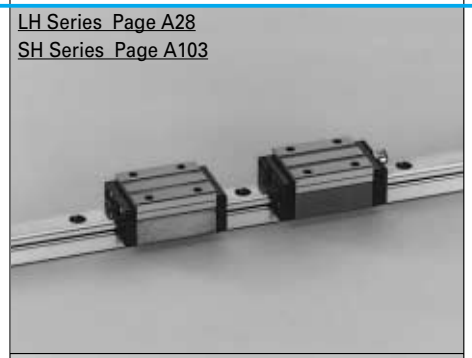 LH Series Page A28 SH Series Page A103	Balls Infinite stroke	◎	• Industrial robots • Materials handling • Electric discharge machines • Woodworking machines • Laser processing machines • Semiconductor manufacturing equipment • Precision measuring equipment • Packaging/packing machines • Food processing machines • Medical equipment • Tool grinders • Flat surface grinders
	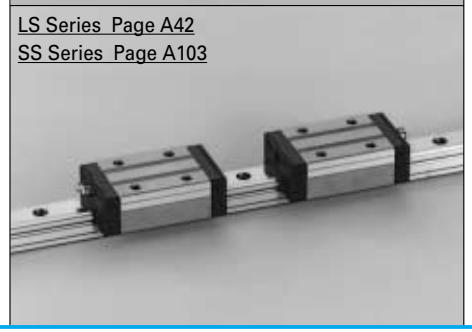 LS Series Page A42 SS Series Page A103	Guided by rail	◎	• Industrial robots • Materials handling • Electric discharge machines • Woodworking machines • Laser processing machines • Semiconductor manufacturing equipment • Precision measuring equipment • Packaging/packing machines • Food processing machines • Medical equipment • Pneumatic components

www.bergab.ru Берг АБ bergab@ya.ru Тел. (495)-228-06-21, факс (495) 223-3071

www.bergab.ru Берг АБ bergab@ya.ru Тел. (495)-228-06-21, факс (495) 223-3071

Rigidity ; ◎ : Superb ◎ : Fare ○ : Low

Product	Appearance	Rolling element, etc.	Rigidity	Major applications
NSK Linear Guides	LA Series 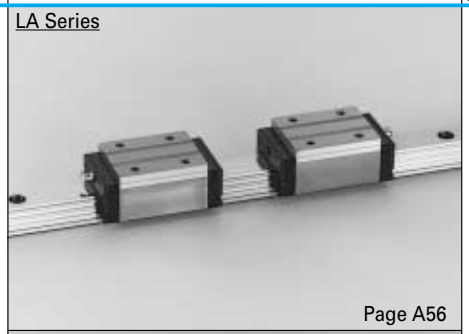 Page A56	Balls Infinite stroke Guided by rail	◎	• Machining centers • NC lathes • Heavy cutting machine tools • Grinders • Gear cutting machines • Press • Electric discharge machines
	LY Series 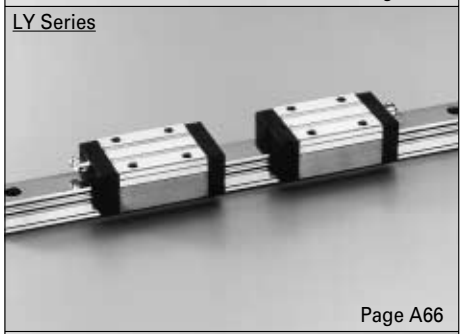 Page A66		◎	• Machining centers • NC lathes • Heavy cutting machine tools • Grinders • Gear cutters
	LW Series 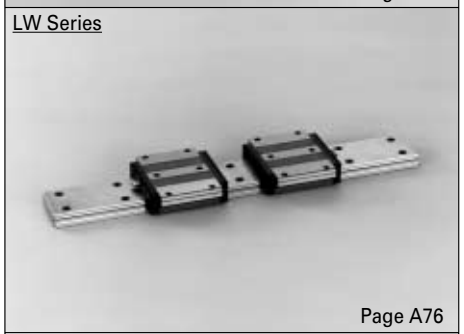 Page A76		◎	• Semiconductor manufacturing equipment • Materials handling • Measuring/Test equipment • Electric discharge machines • Punch press • Industrial robots
	LE Series 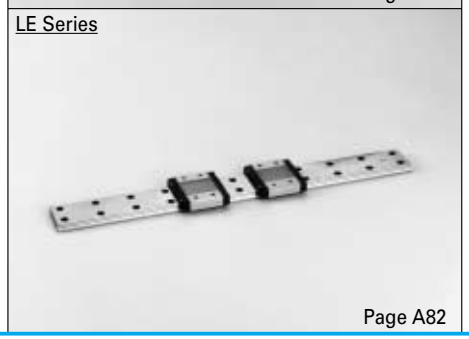 Page A82		○	• Semiconductor manufacturing equipment • Liquid crystal display manufacturing equipment • Medical equipment • Optical stage • Microscope XY stage • Transporting optical fiber • Small robots

Rigidity ; ◎ : Superb ◎ : Fare ○ : Low

Product	Appearance	Rolling element, etc.	Rigidity	Major applications
NSK Linear Guides	LU Series 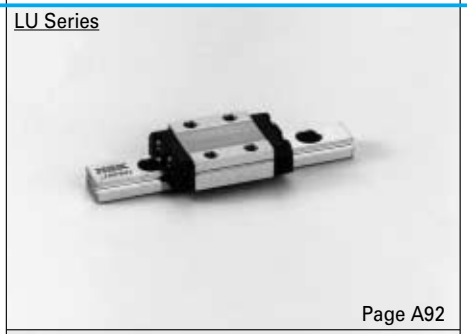 Page A92	Balls Infinite stroke Guided by rail	○	• Semiconductor manufacturing equipment • Liquid crystal display manufacturing equipment • Medical equipment • Optical stage • Microscope XY stage • Transporting optical fiber • Small robots • Computer peripheral equipment • Pneumatic equipment
	LL Series 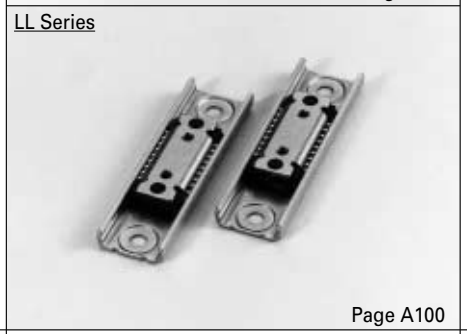 Page A100		○	• Knitting machines • Computer peripheral equipment • Pneumatic equipment • Office equipment
Linear rolling bushing	Page A223	Balls Infinite stroke Round guide shaft	○	• Materials handling • Packaging machines • Medical equipment • Pneumatic equipment • Office equipment • Assembling machines
Crossed roller guide	Page A234	Rollers Limited stroke Rail guide	◎	• Precision stage • Measuring equipment • Test equipment • Printed circuit board assembly

www.bergab.ru Берг АБ bergab@ya.ru Тел. (495)-228-06-21, факс (495) 223-3071

www.bergab.ru Берг АБ bergab@ya.ru Тел. (495)-228-06-21, факс (495) 223-3071

Rigidity ; ◎ : Superb ◎ : Fare ○ : Low

Product	Appearance	Rolling element, etc.	Rigidity	Major applications
Roller pack	Page A240	Roller Infinite stroke Flat surface guide	◎	• Large machine tools • Conveyor system for heavy objects (guide for heavy load)
Linear roller bearing	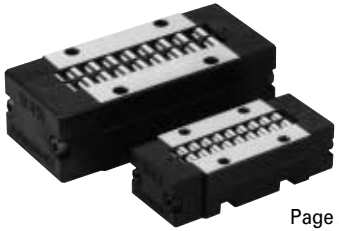 Page A247		◎	
Cam-follower/ roller-follower	Page A252 Page A259		○	• Conveyor systems • Packaging machines • Pallet changers • Office equipment
Translide		balls Infinite stroke Guided by rail	◎	• Automotiue manufacturing equipment • Peripheral equipment of machine tool • Tire molding machine • wood working machine • Automatic doors etc.

www.bergab.ru Берг АБ bergab@ya.ru Тел. (495)-228-06-21, факс (495) 223-3071

www.bergab.ru Берг АБ bergab@ya.ru Тел. (495)-228-06-21, факс (495) 223-3071

A-I Selection Guide to NSK Linear Guides

A-I-1 Structure of NSK Linear Guides

By avoiding structural complexity, and by reducing the number of components, we not only enhanced the precision of linear guides, but also are able to keep costs low. We have added NSK's patented unique structural feature to the original invention (Fig. I-1-1). This contributes to higher precision and lower prices.

NSK linear guide consists of a rail and a ball slide (Fig. I-1.2). The balls roll on the grooves on the rail and the ball slide, and scooped up by the end caps attached to both ends of the ball slide. Then, the balls go through the opening made in the ball slide, and circulate back to the other end.

A-I-2 Characteristics of NSK Linear Guides

The use of a unique offset gothic arch groove (Fig. I-1•3) allows the NSK linear guides to satisfy groove designs required for specific purposes.

The precise measurement of the ball groove leads to stable production of highly accurate linear guides and interchangeable linear guides.

(Fig. I-1•4).

Such technologies eusure the feature of NSK linear guides outlined below.

(1) Abundant in type for any purpose

* Various series are available, and their ball slide models and size categories are standardized to satisfy any requirement. Our technology, polished by abundant experience in the use of special materials and surface treatments, meets the customer's most demanding expectations.

(2) High precision and quality

* High precision and quality come from our superb production and measuring technologies, strengthened by extensive experience in antifriction rotary bearings and ball screw production. Our quality assurance extends to the smallest components.

(3) High reliability and durability

* Logical simplicity in shape, along with stable processing, maintains high precision and reliability.
* Super-clean materials, our advanced heat treatment and processing technologies increase product durability.

(4) Component compatibility shortens delivery time

* Interchangeable parts: The adoption of the gothic-arch groove which makes measuring easy, and a new reliable quality control method has made random-matching of the rails and the ball slides possible. The parts are stocked as standard products, thereby reducing delivery time.

(5) Patented static load carrying capacity (shock-resistance)

* When a super-high load (impact) is applied, our gothic-arch groove spreads the load to surfaces which usually do not come into contact. This increases shock resistance (Fig. I-1•5).

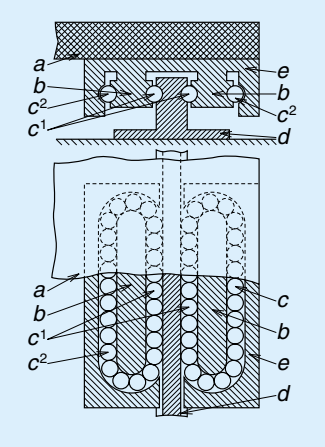

Fig. I-1•1 • French Patent in 1932.
• Inventor : Gretsh (German)

NSK added its patented technology to the invention in Fig. I-1-1, and improved the linear guide structure and realized low cost design.

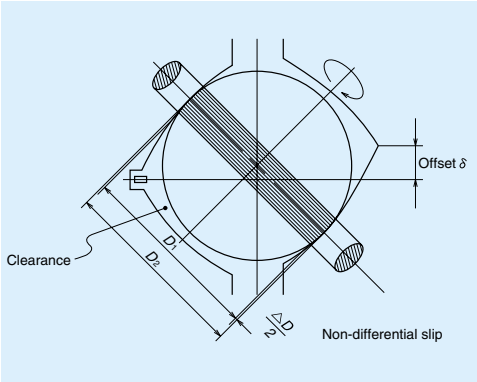

Fig. I-1•3 Offset gothic-arch groove

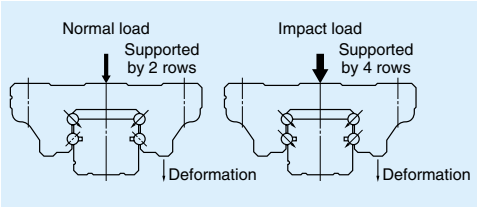

Fig. I-1•5 Shock-resistance

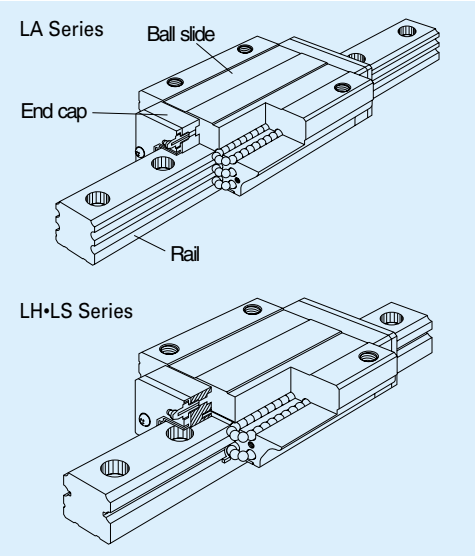

Fig. I-1•2 Structure of NSK linear guides

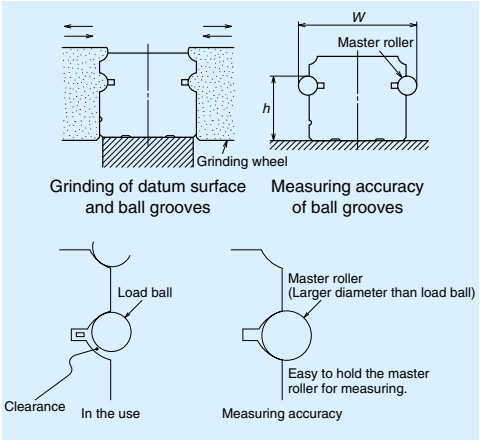

Fig. I-1•4 Processing and measuring grooves

Measuring grooves is easy, and you can obtain highly accurate results for all types of NSK series. This is why you can purchase rail and ball slide separately (interchangeability).

www.bergab.ru Берг АБ bergab@ya.ru Тел. (495)-228-06-21, факс (495) 223-3071

www.bergab.ru Берг АБ bergab@ya.ru Тел. (495)-228-06-21, факс (495) 223-3071

A-I-2.1 Types and Characteristics of NSK Linear Guides

We have abundant types of linear guide for any purpose to accommodate the most special needs of the users.

(1) Types of series and classification by feature

- There are two types of NSK linear guide:
  1. Rigidity and load carrying capacity against the vertical direction are greater than the rigidity and load carrying capacity against the load from the lateral direction (high vertical load carrying capacity type);
  2. Load is equally distributed to four directions (four-directional iso-load carrying capacity type)

- There are three types of NSK linear guide by the length of the ball slide
  1. Standard length ball slide with high-load carrying capacity;
  2. Long ball slide with super-high load carrying capacity;
  3. Short ball slide for mid-level load carrying capacity.
- Four-row ball grooves linear guide has two types:
  1. Self-aligning capability- which absorbs certain amount of installation error;
  2. High moment carrying type with great moment rigidity.
- Two-row ball grooves linear guide has mid-level moment rigidity.
- Interchangeable parts: Thanks to the ease of measuring gothic-arch groove, we can precisely manufacture rails and ball slides, and thus, you can purchase the rails and the ball slides individually and assemble them randomly.
- Stainless steel is also available as standard material for some series.

Table I-2.1 Classification of NSK linear guides

Category		Series	Ball slide model	Shape/installation method	Load direction/capacity	Ball groove structure	Characteristics	Applications	Page
High vertical load carrying capacity type	Self-aligning type	LH SH	AL AN BN BL	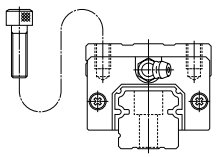	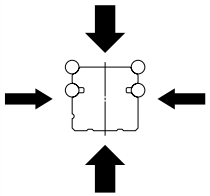	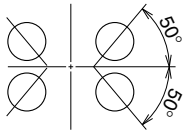	• High load capacity type. • The contact angle between the ball and ball raceway is set at 50 degrees. The load carrying capacity against the vertical directions, which is prevalent in most operations, increases by this design. • The DF contact structure greatly absorbs the error in the perpendicular direction to rail at the time of installation. • Balls make contacts at two points thanks to the offset Gothic-arch groove. This keeps friction to a minimum. • Structural resistance against shock load. • Gothic-arch groove renders measuring of ball grooves accurate and easy. • Standardized interchangeable assemblies allows separate purchase of rails and ball slides. • Stainless steel type is also available for small sizes (- #30). Characteristics of SH series • Lower noise and gentler tone. • Smoother motion. • Low dust generation.	• Cartesian type robots • Robots that remove plastic molds from injection machine • Material hardling • Food processing machines • Packaging/packing machines • Printing machines • Woodworking machines • Paper machines • Measuring equipment • Inspecting equipment • Semiconductor manufacturing equipment • Liquid crystal display manufacturing equipment • Medical equipment • Electric discharge machines • Laser cutting machines • Press • Tool grinders • Flat surface grinders • NC lathes • Machining centers • ATC	A42 A111
			EL GL	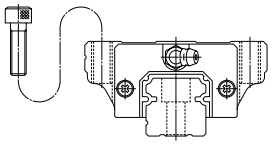					
			FL HL	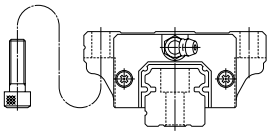					
			EM GM	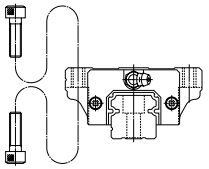					

www.bergab.ru Берг АБ bergab@ya.ru Тел. (495)-228-06-21, факс (495) 223-3071

www.bergab.ru Берг АБ bergab@ya.ru Тел. (495)-228-06-21, факс (495) 223-3071

Category		Series	Ball slide model	Shape/installation method	Load direction/capacity	Ball groove structure	Characteristics	Applications	Page
High vertical load carrying capacity type	Self-aligning type	LS SS	AL CL	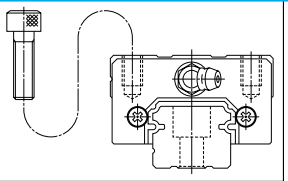	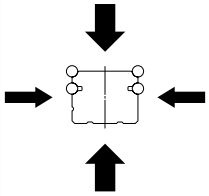	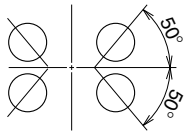	● Compact, low in height ● The contact angle between the ball and the raceway is set at 50 degrees. The load carrying capacity against vertical directions, which is prevalent in most operations, increases by this design. ● The DF contact structure greatly absorbs the error in the perpendicular direction of rail at time of installation. ● Thanks to the offset gothic arch groove, balls make contacts at two points. This keeps friction small. ● Great resistance against shock load. ● Gothic arch groove renders measuring groove accurate and easy. ● Standardized interchangeablility allows separate purchase of rails and ball slide. ● Some are standardized stainless steel type. ● Low-noise type <u>SS series</u> ● Lower noise and gentler tone. ● Smoother motion. ● Low dust generation.	• Cartesian type robots • Robots that remove plastic molds from injection machine • Material handling • Food processing machines • Packaging/packing machines • Printing machines • Woodworking machines • Paper machines • Measuring equipment • Inspection equipment • Semiconductor manufacturing equipment • Liquid crystal display manufacturing equipment • Medical equipment • Electric discharge machines • Laser cutting machines • Press	A42 A119
			EL JL	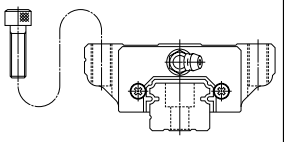					
			FL KL	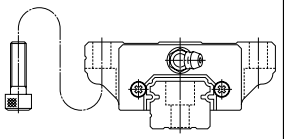					
			EM JM	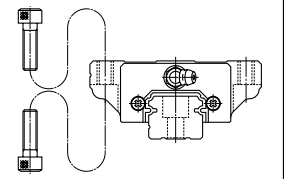					
Four-directional iso-load carrying type	Super-rigid type	LA	AN BN AL BL	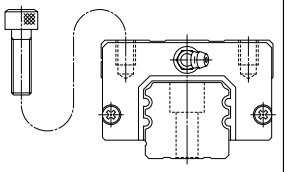	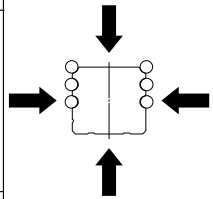	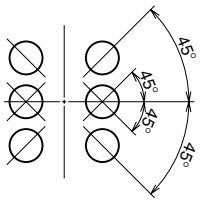	● The contact angle between the ball and the raceway is set at 45 degrees. This makes load carrying capacity and rigidity equal in vertical and lateral directions. ● Six-row ball grooves support load from vertical and lateral directions, enhancing rigidity and increasing load carrying capacity. ● Appropriate friction ● Best for machine tools.	• Machining centers • NC lathes • Heavy cutting machine tools • Gear cutters • Electric discharge machines • Press • Grinders	A56
			EL GL	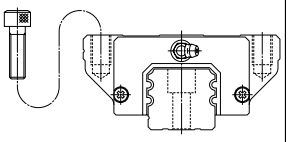					
			FL HL	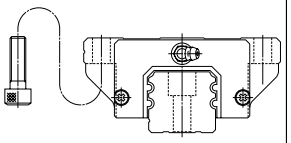					

www.bergab.ru Берг АБ bergab@ya.ru Тел. (495)-228-06-21, факс (495) 223-3071

www.bergab.ru Берг АБ bergab@ya.ru Тел. (495)-228-06-21, факс (495) 223-3071

Category		Series	Ball slide model	Shape/installation method	Load direction/capacity	Ball groove structur	Characteristics	Applications	Page
Four-directional iso-load carrying type	High rigidity type	LY	AN BN AL BL	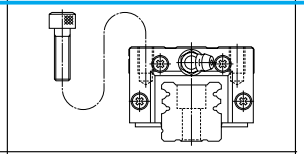	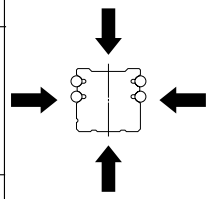	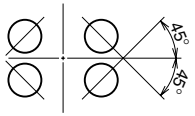 **At time of light preload** 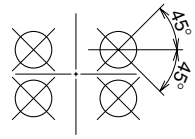 **At time of high preload**	● The contact angle between the ball and the raceway is set at 45 degrees. Therefore, load carrying capacity and rigidity are equal in vertical and lateral directions. ● Balls contact at four points during high preload. The four-row ball groove supports the load from vertical and lateral directions. This makes the linear guide highly rigid. ● Rigidity against moment load is great due to the DB contact (at time of light preload) or the four-point contact (at time of high preload) ● Sliding resistance slightly increases, absorbing vibration to the rail longitudinal direction due to the four-point contact at time of high preload. ● Ideal for heavy cutting machine tools. ● Strong against shock load	• Machining centers • NC lathes • Heavy cutting machine tools • Gear cutters	A66
			EL GL	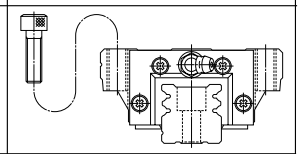					
			FL HL	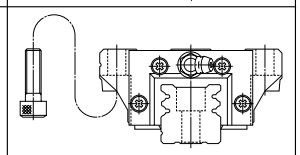					
High vertical load carrying capacity type	High moment capacity type	LW	EL	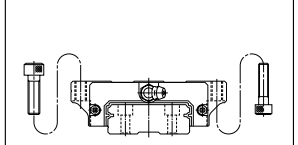	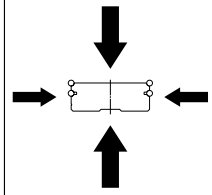	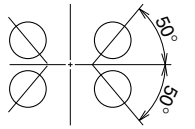	● The contact angle between the ball and the raceway is set at 50 degrees. The load carrying capacity against vertical directions, which is prevalent in most operations, increases with this design ● The rail is wide. This contributes to a high rolling moment carrying capacity and to great moment rigidity when only single linear guide is in use ● Balls contact at two points in the offset gothic arch groove, keeping friction small. ● High resistance against shock load ● Standardized interchangeable assemblies allows separate purchase of rails and ball slides.	• Semiconductor manufacturing equipment • Liquid crystal display manufacturing equipment • Conveyor systems • Inspection equipment • Punch press	A76
Miniature	High moment capacity type	LE	AL TL BL UL CL SL AR TR	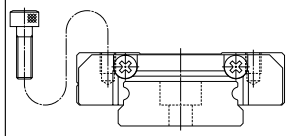	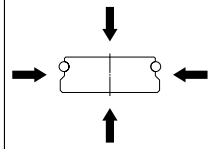	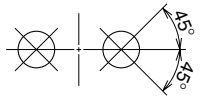	● Extremely thin, and wide in shape. This is ideal in use of only single linear guide. ● Available in standardized stainless steel ● Standardized series with ball retainer. ● Standardized interchangeability allows separate purchase of rails and ball slide.	• Semiconductor manufacturing equipment • Liquid crystal display manufacturing equipment • Medical equipment • Optical stage • Microscope XY stage • Conveying optical fiber • Small robots • Computer peripheral equipment • Pneumatic equipment	A82
Miniature		LU	AL TL BL UL AR TR	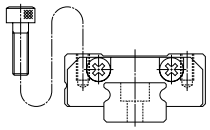	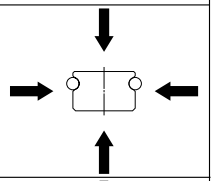		● Super-small size ● Stainless steel is standard as the material. ● Series with a ball retainer is standardized. ● Interchangeability is standardized, allowing separate purchase of rails and ball slide.		A92
Lightweight miniature		LL	PL	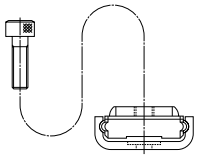	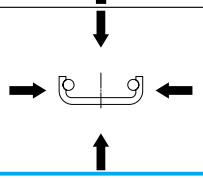		● Light-weight and compact ● Stainless steel as standard material is available.	• Knitting machines • Hard disk carriage damper	A100

www.bergab.ru Берг АБ bergab@ya.ru Тел. (495)-228-06-21, факс (495) 223-3071

www.bergab.ru Берг АБ bergab@ya.ru Тел. (495)-228-06-21, факс (495) 223-3071

A-I-2.2 Models in Each Series and Ball Slide Shape

- "Model" refers to a combination of the linear guide series and its size number with the shape code and height code of the ball slide. Ball slide codes for shape and height are sometimes omitted.

Example of a model:

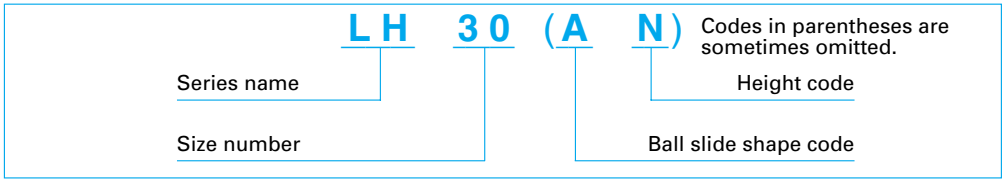

Note: Height code R of LE and LU series refers to low type with ball retainer.

- The combination of ball slide shape and height are shown in table I-2•2

Table I-2•2 Ball slide shape and height codes

Series	Height	Ball slide length	Square type	Flanged type		
			Mounting tap	Mounting tap	Mounting bolt hole	Dual use for tap and bolt holes
LH SH	High	Standard	AN			
		Long	BN			
	Low	Standard	AL	EL	FL	EM
		Long	BL	GL	HL	GM
LS SS	Low	Standard	AL	EL	FL	EM
		Short	CL	JL	KL	JM
LA	High	Standard	AN			
		Long	BN			
	Low	Standard	AL	EL	FL	
		Long	BL	GL	HL	
LY	High	Standard	AN			
		Long	BN			
	Low	Standard	AL	EL	FL	
		Long	BL	GL	HL	
LW	Low	Standard		EL		
LE	Low	Standard	AL, TL, AR, TR			
		Long	BL, UL			
		Short	CL, SL			
LU	Low	Standard	AL, TL, AR, TR			
		Long	BL, UL			
LL	Low	Standard	PL			

A-I-3 Procedures for Selecting Linear Guide

A-I-3.1 Flow Chart for Selection

The flow chart below shows general steps for selection.

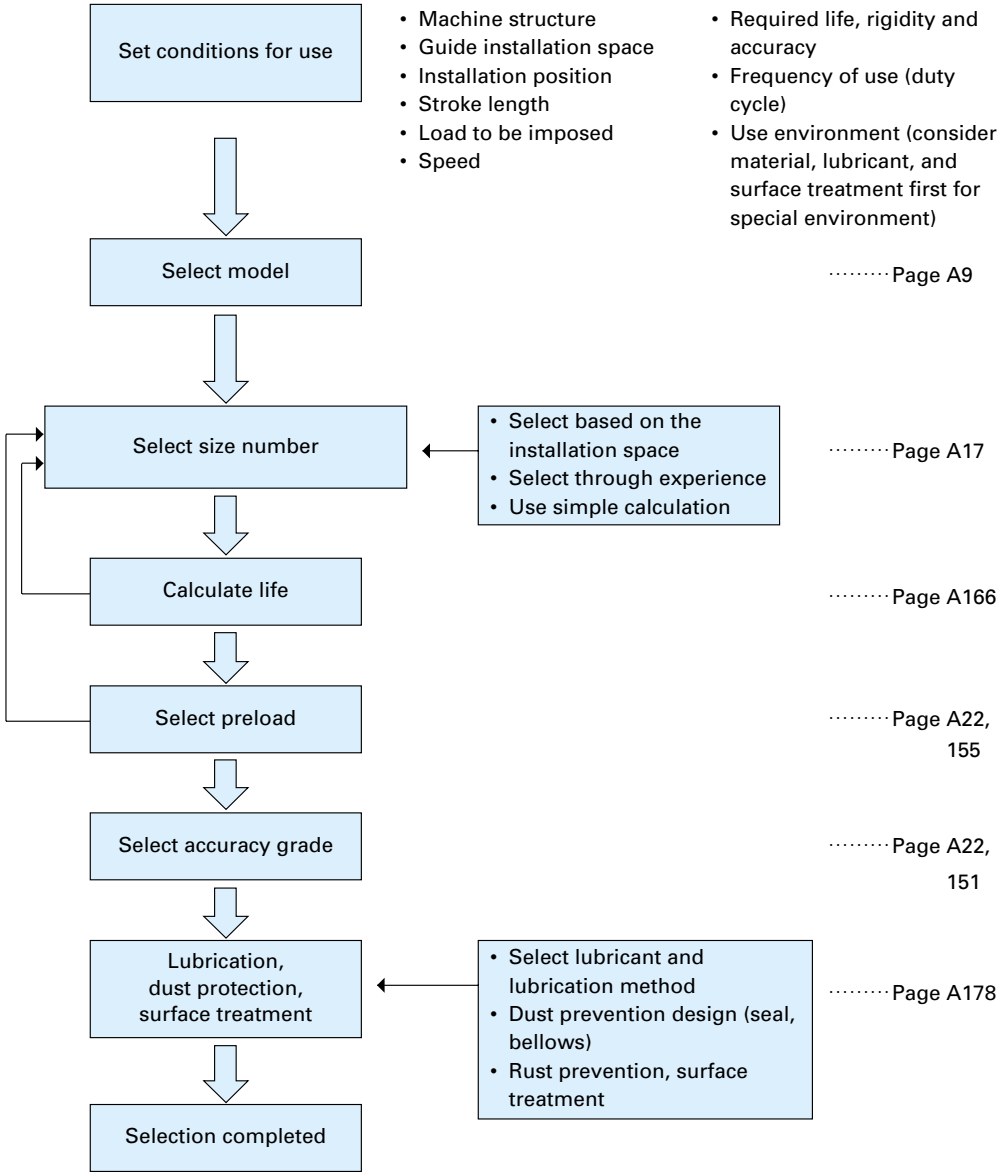

www.bergab.ru Берг АБ bergab@ya.ru Тел. (495)-228-06-21, факс (495) 223-3071

www.bergab.ru Берг АБ bergab@ya.ru Тел. (495)-228-06-21, факс (495) 223-3071

A-Ⅰ-3.2 Selection of Linear Guide Size (Model number)

To select a linear guide of satisfactory durability; it is a standard practice to calculate its expected life. Prior to calculating the linear guide's life expectancy, select an appropriate size of the linear guide.
Below is an easy selection method. After selecting the size by this method, check the life by using the **"A-Ⅱ-3.2: Calculation of Life Expectancy."**

(1) Select the size based on the space to be used.

Select a linear guide which matches the space in which it is used. Select directly from the **"A-Ⅰ-5: Model Number and Dimension Table."**

(2) Select the size based on the ball screw size.

Always select a linear guide which matches the size of the screw shaft diameter, or the size closest to it, e.g., when the ball screw shaft diameter is 32, select linear guide type LH30, or LH35.

(3) Select the size based on the estimated load on one ball slider.

Most linear guides are table-shaped and have two rails and four ball slides for an axis.
Assuming the linear guide is this type, calculate a rough load per ball slide using the formula below:

$$P = \sum \frac{F}{4} + \sum \frac{K_p \cdot F}{2} \qquad \cdots\cdots (3.1)$$

P : Load per ball slide

K_p : Load position coefficient

F : Load

Load position coefficient K_p should be found for each load by the proportion of the distance between ball slide span and load point, and the distance between rail span and load point.

(A) When load is vertical

(Fig. Ⅰ-3•1)

$$K_p = \left|\frac{X_0}{L_b}\right| + \left|\frac{Y_0}{L_r}\right|$$

(B) When the load is in the axial direction

(Fig. Ⅰ-3•2)

$$K_p = \left|\frac{Z_1}{L_b}\right| + \left|\frac{Y_1}{L_b}\right|$$

(C) When the load is lateral to the rail

(Fig. Ⅰ-3•3)

$$K_p = \left|\frac{X_0}{L_b}\right| + \left|\frac{Z_0}{L_r}\right|$$

The load position is normally the coordinate position. Disregard + or - symbols, and use absolute values.

Upon obtaining the load value P per ball slide by using the above position coefficient K_p in (3.1), select the matching size (model number) from Fig. Ⅰ-3•4.
Because the above calculation formula is a simple one, the load obtained by the above formula may be larger than the actual case if the value of K_p is over 1, or in the case three patterns (A), (B), and (C) are combined. In such case, the size to be selected (model number) should be larger; however, the life will be longer.

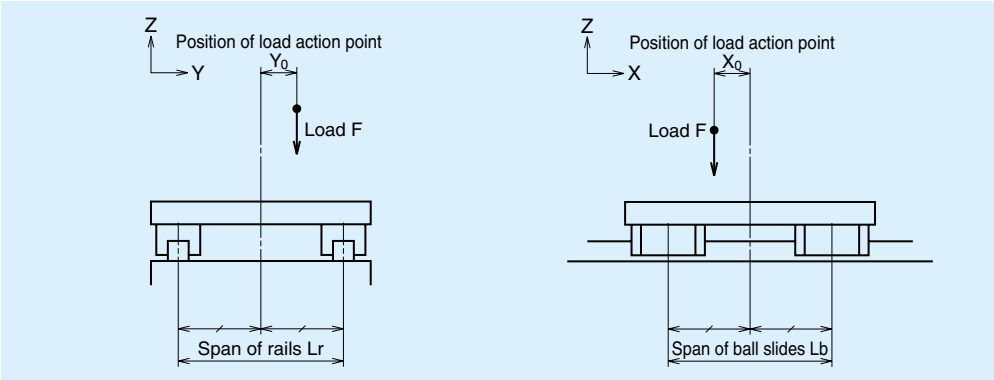

Fig. Ⅰ-3•1 Load from vertical direction

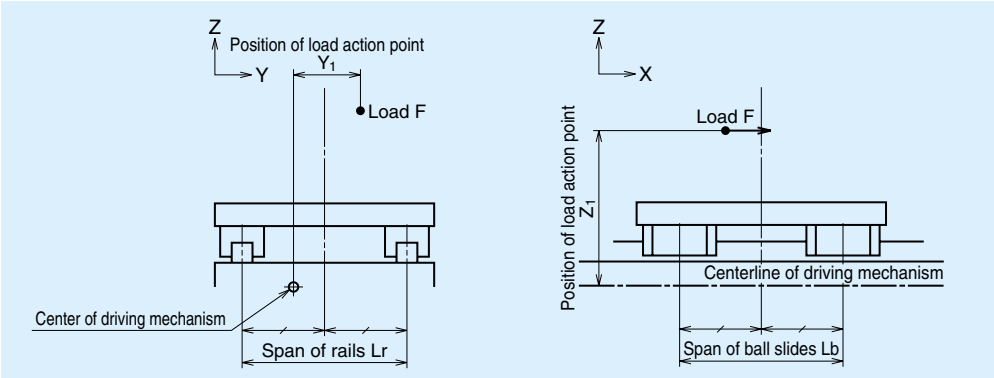

Fig. Ⅰ-3•2 Load to the axis direction

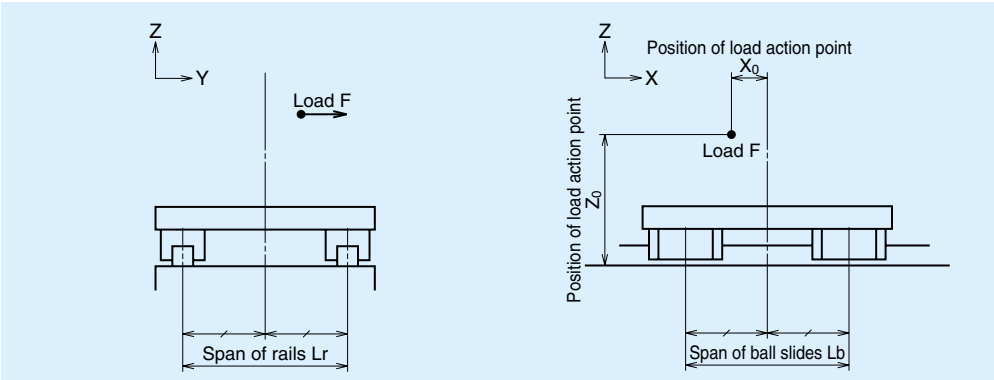

Fig. Ⅰ-3•3 Load from lateral direction

www.bergab.ru Берг АБ bergab@ya.ru Тел. (495)-228-06-21, факс (495) 223-3071

www.bergab.ru Берг АБ bergab@ya.ru Тел. (495)-228-06-21, факс (495) 223-3071

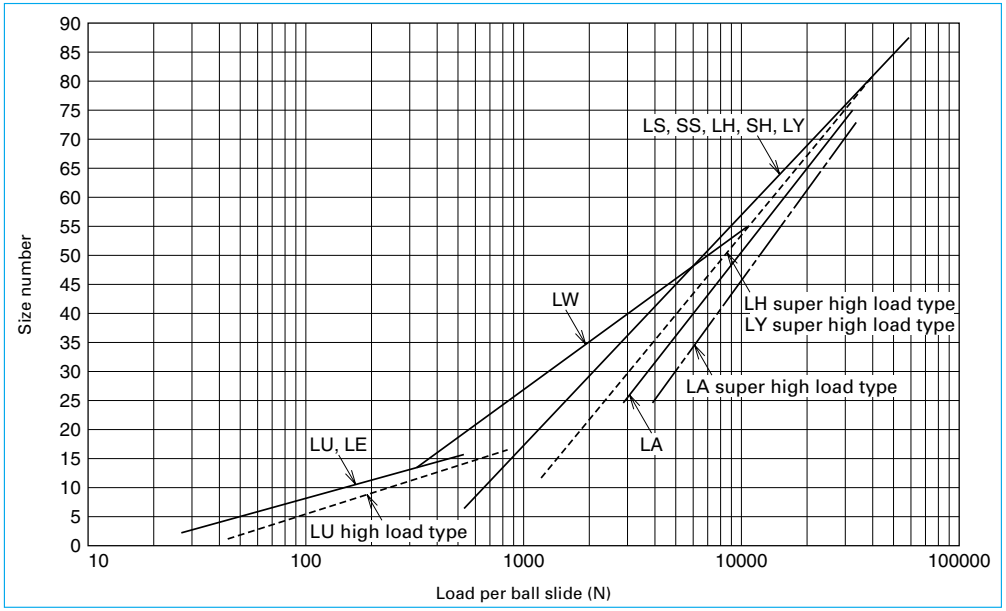

Fig. I-3•4 Selection based on the load

(4) Selection based on the moment load per ball slide

- In cases shown in Fig. I-3•5 to •6, •7, it is necessary to consider the moment load applied to the ball slide.
- Moment directions that have to be taken into account are only those shown by the arrow in the Figures.
- When the load is applied from more than one direction, select the value of the direction which applies the largest moment load.
- Select the size (model number) based on the moment load per ball slide referring to either Fig. I-3•8 or Fig. I-3•9.
- Consult NSK when: moment load and vertical load are applied at the same time; or moment load and horizontal load are applied at the same time.

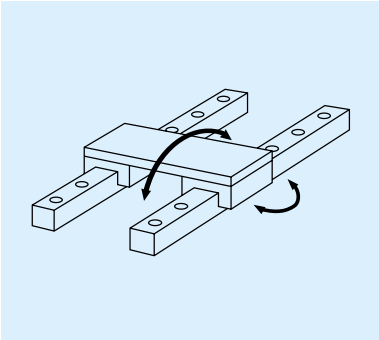

Fig. I-3•5 Pitching and yawing direction

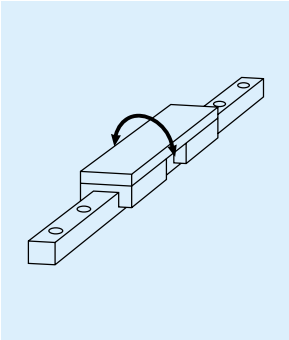

Fig. I-3•6 Rolling direction

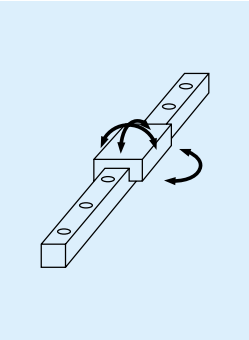

Fig. I-3•7 Pitching, rolling and yawing directions

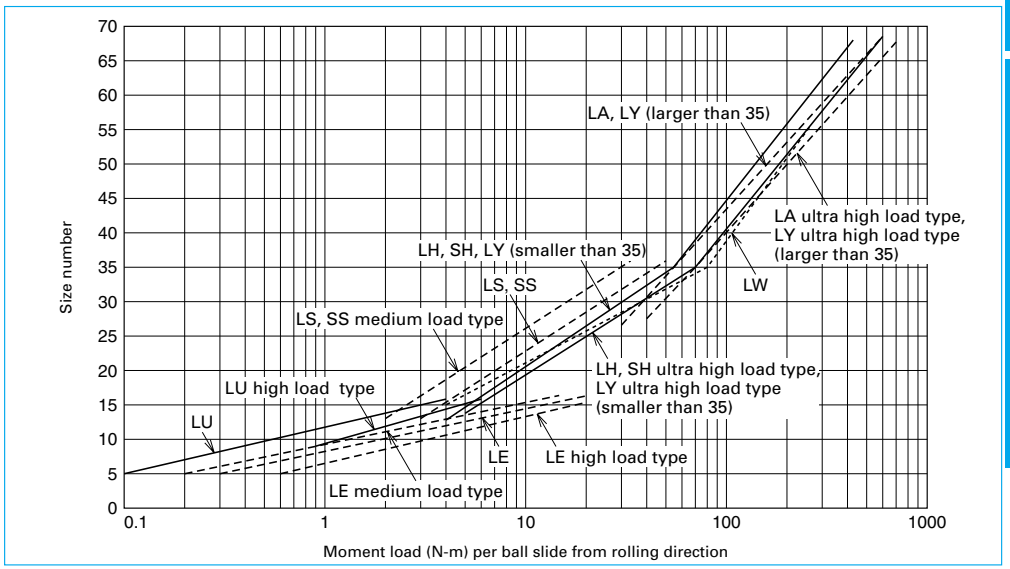

Fig. I-3•8 Selection based on the moment load, rolling direction

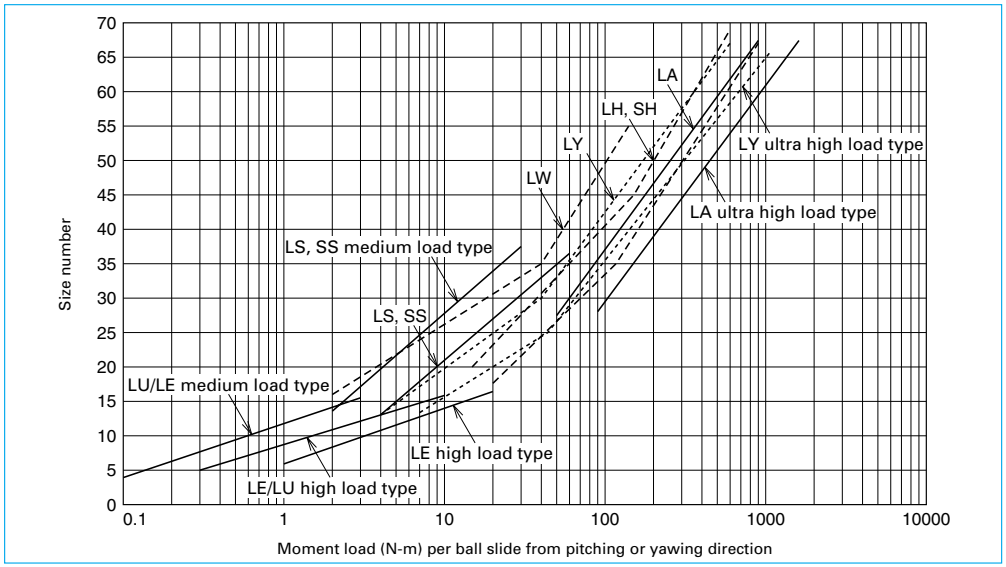

Fig. I-3•9 Selection based on the moment load, pitching or yawing direction

- Loads applied to the types recommended in Fig. I-3•4, I-3•8, and I-3•9 are equivalent to 8% of the basic dynamic load rating of the linear guide. This contributes to select a size numfer with a longer life.

www.bergab.ru Берг АБ bergab@ya.ru Тел. (495)-228-06-21, факс (495) 223-3071

www.bergab.ru Берг АБ bergab@ya.ru Тел. (495)-228-06-21, факс (495) 223-3071

A-I-3.3 Example of Linear Guide Selection (Model number)

The selection below used "**A-I-3.2 (3) Selection based on load per ball slide.**"
In this example, let us select a linear guide for a single axis table as illustrated below.
Use LH-AN type in LH Series which is selected based on "**A-I-2.1 Types and Characteristics of NSK Linear Guides.**"

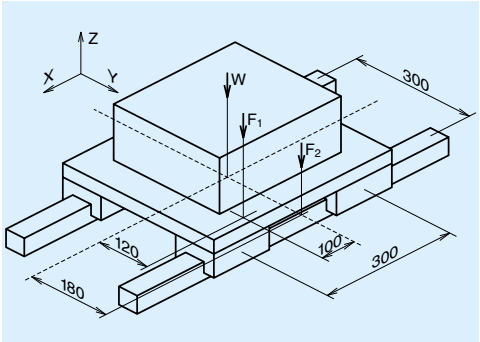

Weight and coordinates of Table *W* :
500N, (0, 0, —)
Weight and coordinates of Weight F_1:
2500N, (100, 120, —)
Weight and coordinates of Weight F_2:
1000N, (0, 180, —)
Since the above is all vertical load, we do not consider Z axis coordinates.
Therefore, the formula "**(A) When vertical load is applied**" is.:

$$K_{p0} = \left|\frac{X_0}{L_b}\right| + \left|\frac{Y_0}{L_r}\right| = \frac{0}{300} + \frac{0}{300} = 0$$

(1) Also $K_{p1} = \frac{100}{300} + \frac{120}{300} = 0.73$

$$K_{p2} = \frac{0}{300} + \frac{180}{300} = 0.6$$

obtain the load per ball slide *P* using formula (3.1) as follows.

$$P = \sum \frac{F}{4} + \sum \frac{K_p \cdot F}{2}$$
$$= \frac{W + F_1 + F_2}{4} + \frac{K_{p0} \cdot W + K_{p1} \cdot F_1 + K_{p2} \cdot F_2}{2}$$
$$= \frac{500 + 2500 + 1000}{4}$$
$$+ \frac{0 \times 500 + 0.73 \times 2500 + 0.6 \times 1000}{2}$$
$$= 2212.5\ (N)$$

The appropriate size is around 30 for LH, LS, and LY types according to Fig. I-3.4. Confirm the size (Model number) in "**A-I-5 Model Number and Dimension Table.**" The correct linear guide size is **LH30AN**.
Calculate the life expectancy using "**A-II-3.2 How to Calculate Life.**"

$$L = 50 \times \left(\frac{f_H \cdot C}{f_W \cdot F_m}\right)^3$$
$$= 50 \times \left(\frac{1 \times 31000}{1.2 \times 2212.5}\right)^3$$
$$= 79590\text{km}$$

Under the condition that:
f_H : Hardness coefficient — 1
f_W : Load coefficient — 1.2
C : Basic dynamic load rating — LH30AN=31000N
F_m: P=2212.5N

A-I-3.4 Accuracy and Preload

(1) Accuracy grades and types of preload

① **Accuracy grades**
- The accuracy grade which matches the characteristic of each series is set for NSK linear guides.
- Table I-3•1 shows accuracy grade set for each series.
- See Page A153 for accuracy specifications of each series.
- Refer to "**(2) Application examples of accuracy grades and preload**" which shows cases of appropriate accuracy grade and preload type for specific purpose.

Table I-3•1 Accuracy grades and applicable series

	Preloaded assembly (non-interchangeable)					Interchangeable assembly
	Ultra precision	Super precision	High precision	Precision	Normal grade	Normal grade
Series	P3	P4	P5	P6	PN	PC
LH, SH	○	○	○	○	○	○
LS, SS	○	○	○	○	○	○
LA	○	○	○	○		
LY	○	○	○	○		
LW			○	○	○	○
LE			○	○	○	○
LU		○	○	○	○	○
LL					○	

www.bergab.ru Берг АБ bergab@ya.ru Тел. (495)-228-06-21, факс (495) 223-3071

www.bergab.ru Берг АБ bergab@ya.ru Тел. (495)-228-06-21, факс (495) 223-3071

② **Preload**

- Several types of preload that match the characteristic of each series are set for NSK linear guides.
- Types of preload for each series are shown in Table I-3•2.
- Radial clearance, preload, and rigidity of each series are shown in Page A155.
- "**(2) Application examples of accuracy grade and preload**" show cases of appropriate preload and accuracy grades for specific purposes.

Table I-3.2 Classification of preload

	Preloaded assembly (non-interchangeable)					Interchangeable assembly	
	Heavy preload	Medium preload	Light preload	Slight preload	Fine clearance	Slight preload	Fine clearance
Series	Z4	Z3	Z2	Z1	Z0	ZZ	ZT
LH, LS		○		○	○	○	○
SH, SS		○		○	○	○	
LA	○	○					
LY	○	○	○	○	○		
LW		(○)		○	○	○	○
LE				○	○		○
LU				○	○		○
LL					○		

Note: • Z3 preload types for LW Series are LW35, 50 only.
• "Z" is omitted from the specification number (See A-I-4.1).

③ **Combinations of accuracy grade and preload**

- Combinations of accuracy grade and preload are shown in Table I-3•3.

Table I-3•3 Combinations of accuracy grade and preload type

	Accuracy grade	Preload
Preloaded assembly	P3～P6	Z4～Z0
	PN	Z1, Z0
Interchangeable assembly	PC	ZZ, ZT

(2) Application examples of accuracy grade and preload

Table I-3.4 shows examples of accuracy grade and preload" of NSK linear guides for specific purposes.

Refer to this table when selecting accuracy grade and preload type for your application.

Table I-3•4 Examples of accuracy grade and preload for specific purpose

Type of machine	Application	Accuracy grade					Preload				
		Ultra precision P3	Super precision P4	High precision P5	Precision P6	Normal grade PN, PC	Heavy preload Z4	Medium preload Z3	Light preload Z2	Slight preload Z1, ZZ	Fine clearance Z0, ZT
Machine tools	• Machining centers		○	○	○		○	○			
	• Grinders	○	○	○			○	○	○		
	• Lathes		○	○	○		○	○			
	• Milling machines		○	○	○		○	○			
	• Drilling machines			○	○		○	○			
	• Boring machines		○	○	○		○	○			
	• Gear cutters		○	○	○		○	○	○		
	• Diesinking machine		○	○	○			○	○	○	
	• Laser cutting machine		○	○	○			○	○	○	
	• Electric discharge machine	○	○	○			○	○			
Industrial machines and equipment	• Punch press			○	○			○	○	○	
	• Press machine				○	○				○	○
	• Welding machine				○	○		○	○	○	○
	• Painting machine				○	○				○	○
	• Textile machine				○	○				○	○
	• Coil winder				○	○		○	○	○	
	• Woodworking machine			○	○	○		○	○	○	○
	• Glass processing machine				○	○				○	○
	• Stone cutting machine				○	○				○	○
	• Tire forming machine					○				○	○
	• ATC				○	○				○	○
	• Industrial robot			○	○	○		○	○	○	○
	• Materials handling				○	○				○	○
	• Packing machine				○	○				○	○
	• Construction machine					○					○
Semiconductor facilities	• Prober	○						○		○	
	• Wire bonder		○	○				○	○	○	
	• PCB driller			○	○			○	○	○	
	• Slicer	○	○						○		
	• Dicer	○	○						○		
	• Chip mounter			○	○			○	○	○	
	• IC handler			○	○					○	
	• Scanner			○	○					○	
	• Lithographic machine	○	○					○	○	○	
Others	• Measuring / inspection equipment	○	○	○	○					○	
	• Three-dimensional measuring equipment	○	○	○	○			○	○	○	
	• Medical equipment		○	○	○					○	○
	• OA equipment				○	○				○	○
	• Railway cars					○				○	○
	• Stage systems					○					○
	• Pneumatic equipment				○	○				○	○

Only "slight preload (Z1, ZZ)" and "fine clearance (Z0, ZT)" are available for normal grade (PN and PC).
For interchangeable type, only accuracy grade "PC," and preload (ZZ) and (ZT) are available.
Refer to Page A151 for the explanation of accuracy grade and preload.

www.bergab.ru Берг АБ bergab@ya.ru Тел. (495)-228-06-21, факс (495) 223-3071

www.bergab.ru Берг АБ bergab@ya.ru Тел. (495)-228-06-21, факс (495) 223-3071

A-I-3.5 Available Length of Rail (single rail)

- Table I-3•5 and Table I-3•6 show the limitations of rail length (maximum length). However, the limitations vary by accuracy grade.

Table-I-3•5 Limitations of rail length (single rail)

Unit : mm

Series	Material \ Size	05	07	09	12	15	20	25	30	35	45	55	65	85
LH SH	Special high carbon steel					2000	3960	3960	4000	4000	3990	3960	3900	2520
	Stainless steel					1800	3500	3500	3500					
LS SS	Special high carbon steel					2000	3960	3960	4000	4000				
	Stainless steel					1800	3500	3500	3500	3500				
LA	Special high carbon steel							3960	4000	4000	3990	3960	3900	
LY	Special high carbon steel					2000	2000	2200	3000	3000	3700	3000	3000	
LE	Stainless steel	150	600	800	1000	1200								
LU	Special high carbon steel			1200	1800	2000								
	Stainless steel	210	375	600	800	1000								

Table-I-3•6 Length limitations of LW Series rails

Unit : mm

Series	Material \ Size	17	21	27	35	50
LW	Special high carbon steel	1000	1600	2000	2400	3000

- Rails can be butted if user requirement exceeds the rail length shown in the Table. Please consult NSK.
- Rails for butting connection are available for LH and LS interchangeable rails. Please consult with NSK.

A-I-4 Coding for Reference Number of Linear Guides

When inquiring about or ordering linear guide products from the catalog, please use the reference number of the coding system detailed below. Please omit the design serial number (-**) as this is an internal NSK code that is assigned after a design is created for an application. Once an order is placed, the product reference number and design serial number are combined into the final part number.
A matched set of assemblies is a set of rails and slider blocks where the rails and slider blocks are ground simultaneously to ensure matching assembly height tolerances depending on the accuracy grade required. If you would like to order a matched set, be sure to indicate as such by including the "-II" with your reference number.

1. Preloaded assembly

LH 30 1200 AN C 2 – P5 Z3 –II

- Series
- Size
- Rail length (mm)
- Ball slide shape code (See Table I-2•2 in page A15)
- Material/surface treatment code (See Table I-4•1 in page A27)
- Number of the ball slide per rail
- *Design serial number
- Accuracy grade code (See Table I-3•2 and I-4•2 in page A22)
- Preload code (See Table I-3•2 in page A23)
- *-II: Set of two guides for an axis Default: One guide

* Please note that we assign the design number, and omit the last code (II) that indicates a use of two rails as a set to finalize the reference number as product identification.

2. Interchangeable type

Interchangeable rails and ball slides for random matching are available for LH, LS, SH, SS, LE, LU, and LW series. The rails and ball slides may be purchased separately.

(1) Reference number coding for assembled rail and ball slide

LH 30 1200 AN C 2 – P5 Z3 –II

- Series
- Size
- Rail length (mm)
- Ball slide shape code (See Table I-2•2 in page A15)
- Material/surface treatment code (See Table I-4•1 in page A27)
- Number of the ball slide per rail
- *Design number
  T: Domestic standard
  K and J: Domestic semi-standard
  B and D: International user standard
- Accuracy code (See Table I-3•2 and I-4•2)
- Preload code (See Table I-3•2)
- *-II: Set of two guides for an axis Default: One guide

* Please note that we assign the design number, and omit the last code (II) that indicates a use of two rails as a set to finalize the reference number as product identification.

www.bergab.ru Берг АБ bergab@ya.ru Тел. (495)-228-06-21, факс (495) 223-3071

www.bergab.ru Берг АБ bergab@ya.ru Тел. (495)-228-06-21, факс (495) 223-3071

(2) Reference number coding for interchangeable ball slide

L A H 3 5 A N S Z - K

- Interchangeable ball slide code
- Series
- Size
- Ball slide shape code (See Table I-2•2)
- Option code
  - -K: Equipped with standard NSK K1
  - -F: Fluoride low temperature chrome platin + standard grease
  - -F50: Fluoride low temperature chrome platin + LG2 grease
- Preload code
  - Default: Fine clearance
  - Z: Slight preload
- Material code
  - Default Standard material
  - S: Stainless steel

(3) Reference number coding for interchangeable rail

L 1 H 3 0 1 2 0 0 L C N T ** P C Z

- Interchangeable rail code
- Series
- Size
- Rail length (mm)
- Shape code
  - L: standard
  - R: LU09, LU12 and LE standard equipped with ball retainer
  - S: LU09 and LU12 M3 with ball retainer and bolt holes for M3
  - T: LS15 with bolt holes for M4
- Material/surface treatment code (See Table I-4•1)
- *Butting rail specification
  - N: Non-butting
  - L: Butting specification
- *Design serial number
  - T: Domestic standard
  - K: Domestic semi-standard
  - B: International user standard
- Accuracy code: PC (PC grade is only available)
- Preload code
  - T: Fine clearance
  - Z: Slight preload

* Please consult with NSK for butting rail specification.

Table I-4•1 Material/surface treatment code

Code	Description
P	Special high carbon steel + high performance seal
R	Special high carbon steel + surface treatment + high performance seal
T	Stainless steel + high performance seal
U	Stainless steel + surface treatment + high performance seal
C	Special high carbon steel (NSK standard)
K	Stainless steel
D	Special high carbon steel with surface treatment
H	Stainless steel with surface treatment
Z	Other, special

Table I-4•2 Accuracy code

accuracy	Non NSK K1	with NSK K1
Ultra precision grade	P3	K3
Super precision grade	P4	K4
High precision grade	P5	K5
Precision grade	P6	K6
Normal grade	PN	KN
Normal interchan geade	PC	KC

Note: Refer to Page A125 for NSK K1® lubrication unit.

A-I-5 Model Number and Dimension Table of NSK Linear Guides

A-I-5.1 LH Series

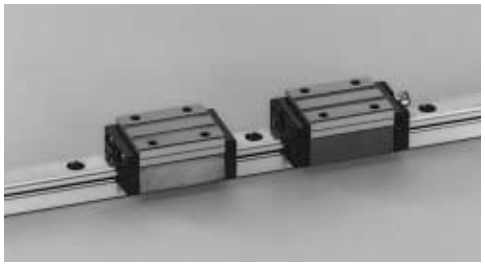

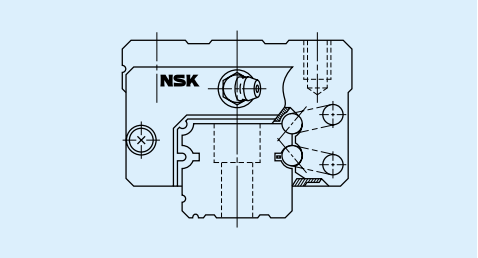

Fig. I-5.1 LH Series

(1) High self-aligning capability (rolling direction)

Same as the DF combination in angular contact bearings, self-aligning capability is high because the cross point of the contact lines of balls and grooves comes inside, reducing moment rigidity.

This increases the capacity to absorb the error of installation.

(2) High load carrying capacity to vertical direction

The contact angle is set at 50 degrees, increasing load carrying capacity as well as rigidity in vertical direction.

(3) High resistance against impact load

The bottom ball groove is formed in gothic-arch and the center of the top and bottom grooves are offset as shown in Fig.I-5•2. The vertical load is generally carried by the top rows, at where balls are contacting at two points. Because of this design, the bottom rows will carry load when a large impact load is applied vertically as shown in Fig.I-5•3. This assures high resistance to the impact load.

(4) High accuracy

I-5.4, fixing the master rollers is easy thanks to the gothic-arch groove. This makes easy and accurate measuring of ball grooves.

(5) Easy to handle, and designed with safety in mind.

Balls are retained in the retainer, therefore they do not fall out when the ball slider is withdrawn from the rail.

(6) Abundant models and sizes

Each series has various models of ball slides, rendering the linear guide available for numerous uses.

(7) Interchangeable series is available (prompt delivery)

The series enables random matching of rails and ball slides (interchangeability) for prompt delivery.

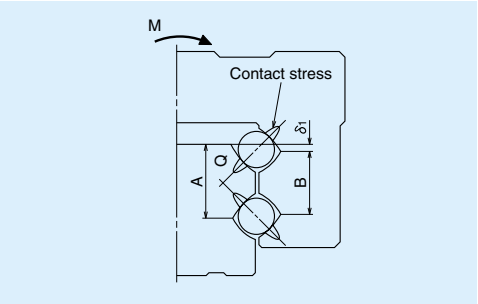

Fig. I-5.2 Enlarged illustration of the offset gothic-arch groove

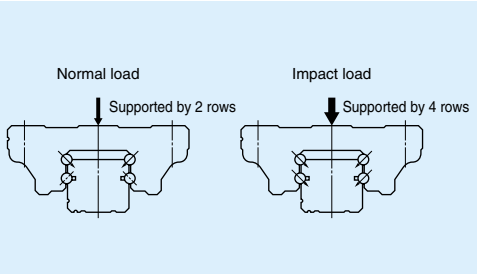

Fig. I-5.3 When load is applied

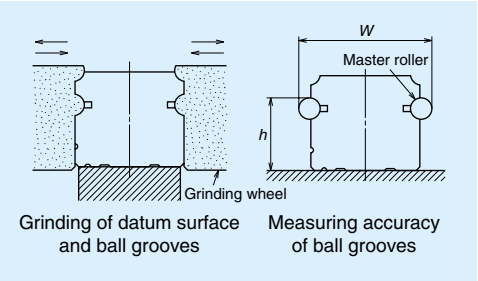

Fig. I-5.4 Rail grinding and measuring

www.bergab.ru Берг АБ bergab@ya.ru Тел. (495)-228-06-21, факс (495) 223-3071

www.bergab.ru Берг АБ bergab@ya.ru Тел. (495)-228-06-21, факс (495) 223-3071

Dimensions of LH Series (Preloaded assembly)

LH-AL, AN (High load type)
LH-BL, BN (Super high load type)

LH 35 0840 AN C 2 – PN 0 –Ⅱ**

- **Series**
- **Size**
- **Rail length (mm)**
- **Ball slide shape code**
- **Material/surface treatment code (See Page A26)**
  C: Standard (Special high carbon steel)
  K: Stainless steel (Applicable only LH15-30)
- **Number of ball slides per rail**
- *** Design serial number**
- **Accuracy code (See table Ⅰ-3·1 and Ⅰ-4·2)**
- **Preload code 0: Z0 / 1: Z1 / 3: Z3(See page A23)**
- ***-Ⅱ: Use two rails as a set. Default: One rail use**

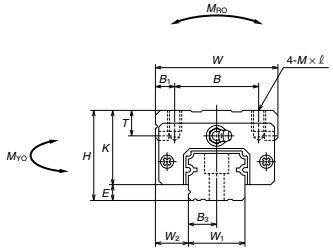

* Please note that we assign the design number, and omit the last code (Ⅱ) that indicates a use of two rails as a set to finalize the reference number as product identification.

BN type

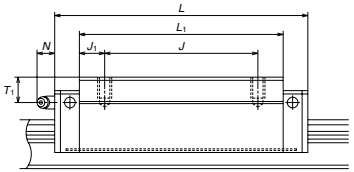

AN type

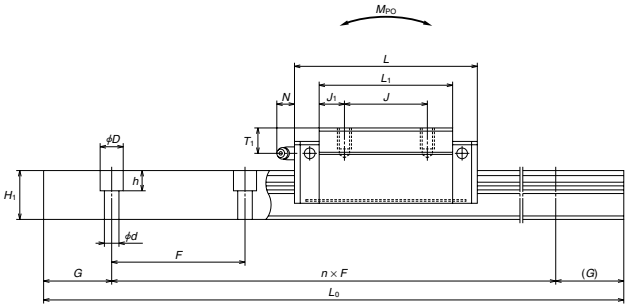

Unit: mm

Table. Ⅰ-5•1

Model No.	Assembly Height H	Assembly E	Assembly W_2	Ball slide Width W	Ball slide Length L	Mounting hole B	Mounting hole J	Mounting hole M×pitch×ℓ	B_1	L_1	J_1	K	T	Grease fitting Hole size	Grease fitting T_1	Grease fitting N
LH15AN	28	4.6	9.5	34	55	26	26	M4×0.7×6	4	39	6.5	23.4	8	φ3	8.5	3.3
LH15BN					74					58	16					
LH20AN	30	5	12	44	69.8	32	36	M5×0.8×6	6	50	7	25	12	M6×0.75	5	11
LH20BN					91.8		50			72	11					
LH25AL	36	7	12.5	48	79	35	35	M6×1×6	6.5	58	11.5	29	12	M6×0.75	6	11
LH25AN	40							M6×1×9				33			10	
LH25BL	36				107		50	M6×1×6		86	18	29			6	
LH25BN	40							M6×1×9				33			10	
LH30AL	42	9	16	60	85.6	40	40	M8×1.25×8	10	59	9.5	33	14	M6×0.75	7	11
LH30AN	45							M8×1.25×10				36			10	
LH30BL	42				124.6		60	M8×1.25×8		98	19	33			7	
LH30BN	45							M8×1.25×10				36			10	
LH35AL	48	9.5	18	70	109	50	50	M8×1.25×8	10	80	15	38.5	15	M6×0.75	8	11
LH35AN	55							M8×1.25×12				45.5			15	
LH35BL	48				143		72	M8×1.25×8		114	21	38.5			8	
LH35BN	55							M8×1.25×12				45.5			15	
LH45AN	70	14	20.5	86	139	60	60	M10×1.5×17	13	105	22.5	56	17	Rc1/8	20	13
LH45BN					171		80			137	28.5					
LH55AN	80	15	23.5	100	163	75	75	M12×1.75×18	12.5	126	25.5	65	18	Rc1/8	21	13
LH55BN					201		95			164	34.5					
LH65AN	90	16	31.5	126	193	76	70	M16×2×20	25	147	38.5	74	23	Rc1/8	19	13
LH65BN					253		120			207	43.5					

Model No.	Rail Width W_1	Rail Height H_1	Rail Pitch F	Rail Mounting bolt hole d×D×h	Rail B_3	Rail G (recommended)	Rail Max. length L_{0max} ( ) for stainless	Basic load rating Dynamic C (N)	Basic load rating Static C_0 (N)	Static moment M_{RO} (N·m)	Static moment M_{PO} (N·m)	Static moment M_{YO} (N·m)	Ball dia. D_W	Weight Ball slide (kg)	Weight Rail (kg/m)
LH15AN	15	15	60	4.5×7.5×5.3	7.5	20	2000 (1800)	10800	20700	108	95	80	3.175	0.18	1.6
LH15BN								14600	32000	166	216	181		0.26	
LH20AN	20	18	60	6×9.5×8.5	10	20	3960 (3500)	17400	32500	219	185	155	3.968	0.33	2.6
LH20BN								23500	50500	340	420	355		0.48	
LH25AL	23	22	60	7×11×9	11.5	20	3960 (3500)	25600	46000	360	320	267	4.762	0.46	3.6
LH25AN														0.55	
LH25BL								34500	71000	555	725	610		0.69	
LH25BN														0.82	
LH30AL	28	26	80	9×14×12	14	20	4000 (3500)	31000	51500	490	350	292	5.556	0.69	5.2
LH30AN														0.77	
LH30BL								46000	91500	870	1030	865		1.16	
LH30BN														1.3	
LH35AL	34	29	80	9×14×12	17	20	4000	47500	80500	950	755	630	6.350	1.2	7.2
LH35AN														1.5	
LH35BL								61500	117000	1380	1530	1280		1.7	
LH35BN														2.1	
LH45AN	45	38	105	14×20×17	22.5	22.5	3990	81000	140000	2140	1740	1460	7.937	3.0	12.3
LH45BN								99000	187000	2860	3000	2520		3.9	
LH55AN	53	44	120	16×23×20	26.5	30	3960	119000	198000	3600	3000	2510	9.525	4.7	16.9
LH55BN								146000	264000	4850	5150	4350		6.1	
LH65AN	63	53	150	18×26×22	31.5	35	3900	181000	281000	6150	4950	4150	11.906	7.7	24.3
LH65BN								235000	410000	8950	10100	8450		10.8	

The basic dynamic load rating is a load that furnishes 50 km rating fatigue life; it is a vertical and constant load to the ball slide mounting surface.
When converting the basic dynamic load rating C to the dynamic load rating C_{100} for 100 km rating fatigue life, divide the C by 1.26

www.bergab.ru Берг АБ bergab@ya.ru Тел. (495)-228-06-21, факс (495) 223-3071

www.bergab.ru Берг АБ bergab@ya.ru Тел. (495)-228-06-21, факс (495) 223-3071

LH-EL (High load type)
LH-GL (Super high load type)

LH 35 0840 EL C 2 – ** **PN 0 –Ⅱ**

- **Series**
- **Size**
- **Rail length (mm)**
- **Ball slide shape code**
- **Material/surface treatment code (See Page A26)**
  C: Standard (Special high carbon steel)
  K: Stainless steel (Applicable only LH15-30)
- **Number of ball slides per rail**
- *** Design serial number**
- **Accuracy code (See table Ⅰ-3·1 and Ⅰ-4·2)**
- **Preload code 0: Z0 / 1: Z1 / 3: Z3(See page A23)**
- ***-Ⅱ: Use two rails as a set. Default: One rail use**

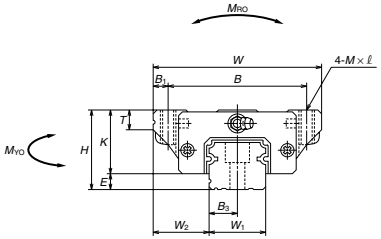

* Please note that we assign the design number, and omit the last code (Ⅱ) that indicates a use of two rails as a set to finalize the reference number as product identification.

GL type

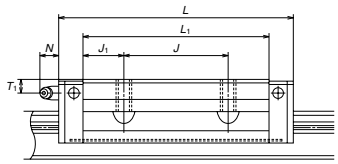

EL type

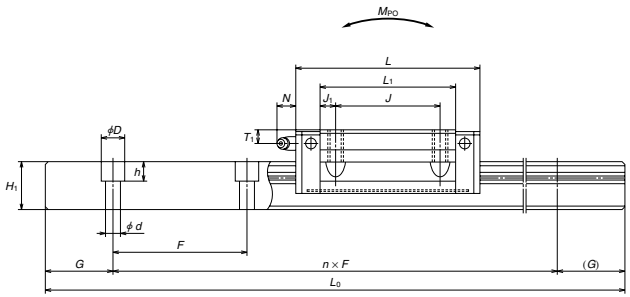

Unit: mm

Table. Ⅰ-5•2

Model No.	Assembly Height H	Assembly E	Assembly W2	Ball slide Width W	Ball slide Length L	Mounting hole B	Mounting hole J	Mounting hole M×pitch×ℓ	B1	L1	J1	K	T	Grease fitting Hole size	Grease fitting T1	Grease fitting N
LH15EL	24	4.6	16	47	55	38	30	M5×0.8×8	4.5	39	4.5	19.4	8	ϕ3	4.5	3.3
LH15GL					74					58	14					
LH20EL	30	5	21.5	63	69.8	53	40	M6×1×10	5	50	5	25	10	M6×0.75	5	11
LH20GL					91.8					72	16					
LH25EL	36	7	23.5	70	79	57	45	M8×1.25×16	6.5	58	6.5	29	11	M6×0.75	6	11
LH25GL					107			(M8×1.25×12)		86	20.5		(12)			
LH30EL	42	9	31	90	98.6	72	52	M10×1.5×18	9	72	10	33	11	M6×0.75	7	11
LH30GL					124.6			(M10×1.5×15)		98	23		(15)			
LH35EL	48	9.5	33	100	109	82	62	M10×1.5×20	9	80	9	38.5	12	M6×0.75	8	11
LH35GL					143					114	26					
LH45EL	60	14	37.5	120	139	100	80	M12×1.75×24	10	105	12.5	46	13	Rc1/8	10	13
LH45GL					171					137	28.5					
LH55EL	70	15	43.5	140	163	116	95	M14×2×28	12	126	15.5	55	15	Rc1/8	11	13
LH55GL					201					164	34.5					
LH65EL	90	16	53.5	170	193	142	110	M16×2×24	14	147	18.5	74	23	Rc1/8	19	13
LH65GL					253					207	48.5					
LH85GL	110	18	65	215	303	185	140	M20×2.5×30	15	243	51.5	92	30	Rc1/8	23	13

Model No.	Rail Width W1	Rail Height H1	Rail Pitch F	Rail Mounting bolt hole d×D×h	Rail B3	Rail G (recommended)	Rail Max. length L0max. ( ) for stainless	Basic load rating Dynamic C (N)	Basic load rating Static C0 (N)	Static moment MRO (N·m)	Static moment MPO (N·m)	Static moment MYO (N·m)	Ball dia. DW	Weight Ball slide (kg)	Weight Rail (kg/m)
LH15EL	15	15	60	4.5×7.5×5.3	7.5	20	2000 (1800)	10800	20700	108	95	80	3.175	0.17	1.6
LH15GL								14600	32000	166	216	181		0.25	
LH20EL	20	18	60	6×9.5×8.5	10	20	3960 (3500)	17400	32500	219	185	155	3.968	0.45	2.6
LH20GL								23500	50500	340	420	355		0.65	
LH25EL	23	22	60	7×11×9	11.5	20	3960 (3500)	25600	46000	360	320	267	4.762	0.63	3.6
LH25GL								34500	71000	555	725	610		0.93	
LH30EL	28	26	80	9×14×12	14	20	4000 (3500)	35500	63000	600	505	425	5.556	1.2	5.2
LH30GL								46000	91500	870	1030	865		1.6	
LH35EL	34	29	80	9×14×12	17	20	4000	47500	80500	950	755	630	6.350	1.7	7.2
LH35GL								61500	117000	1380	1530	1280		2.4	
LH45EL	45	38	105	14×20×17	22.5	22.5	3990	81000	140000	2140	1740	1460	7.937	3.0	12.3
LH45GL								99000	187000	2860	3000	2520		3.9	
LH55EL	53	44	120	16×23×20	26.5	30	3960	119000	198000	3600	3000	2510	9.525	5.0	16.9
LH55GL								146000	264000	4850	5150	4350		6.5	
LH65EL	63	53	150	18×26×22	31.5	35	3900	181000	281000	6150	4950	4150	11.906	10.0	24.3
LH65GL								235000	410000	8950	10100	8450		14.1	
85	65	180	24×35×28	42.5	45	2520	345000	585000	17300	17400	14600	14.287	24.5	38.3	

※Dimensions in parenthesis are for items made of stainless steel.
※LH85 is the item on order.
※The external appearance of stainless steel ball slides differs from those of standard material ball slide.

The basic dynamic load rating is a load that furnishes 50 km rating fatigue life; it is a vertical and constant load to the ball slide mounting surface.
When converting the basic dynamic load rating C to the dynamic load rating C_{100} for 100 km rating fatigue life, divide the C by 1.26

www.bergab.ru Берг АБ bergab@ya.ru Тел. (495)-228-06-21, факс (495) 223-3071

www.bergab.ru Берг АБ bergab@ya.ru Тел. (495)-228-06-21, факс (495) 223-3071

LH-EM **LH-FL** **(High load type)**
LH-GM **LH-HL** **(Super high load type)**

LH 35 0840 FL C 2 – ** **PN 0 –Ⅱ**

- **Series**
- **Size**
- **Rail length (mm)**
- **Ball slide shape code**
- **Material/surface treatment code (See Page A26)**
  C: Standard (Special high carbon steel)
  K: Stainless steel (Applicable only LH15-30)
- **Number of ball slides per rail**
- *** Design serial number**
- **Accuracy code (See table Ⅰ-3·1 and Ⅰ-4·2)**
- **Preload code 0: Z0 / 1: Z1 / 3: Z3(See page A23)**
- ***-Ⅱ: Use two rails as a set. Default: One rail use**

* Please note that we assign the design number, and omit the last code (Ⅱ) that indicates a use of two rails as a set to finalize the reference number as product identification.

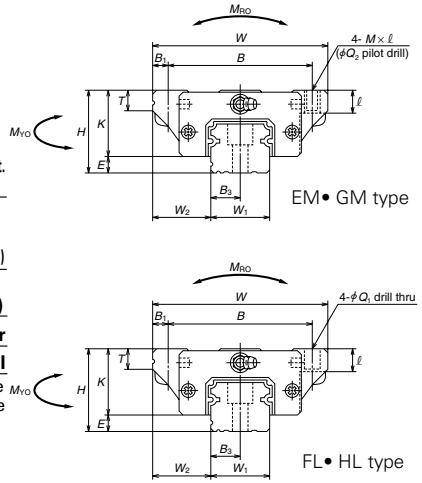

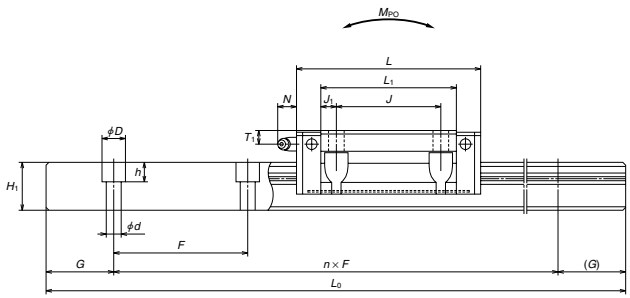

Table. Ⅰ-5•3

Unit: mm

Model No.	Assembly Height H	Assembly E	Assembly W_2	Ball slide Width W	Ball slide Length L	Mounting hole B	Mounting hole J	Mounting hole $Q_1 \times \ell$ / $M \times$ pitch $\times \ell$	Mounting hole Q_2	B_1	L_1	J_1	K	T	Grease fitting Hole size	Grease fitting T_1	Grease fitting N
LH15FL	24	4.6	16	47	55	38	30	4.5×7	—	4.5	39	4.5	19.4	8	ϕ3	4.5	3.3
LH15EM								M5×0.8×7	4.4								
LH15HL					74			4.5×7	—		58	14					
LH15GM								M5×0.8×7	4.4								
LH20FL	30	5	21.5	63	69.8	53	40	6×9.5	—	5	50	5	25	10	M6×0.75	5	11
LH20EM								M6×1.0×9.5	5.3								
LH20HL					91.8			6×9.5	—		72	16					
LH20GM								M6×1×9.5	5.3								
LH25FL	36	7	23.5	70	79	57	45	7×10 (7×11.5)	—	6.5	58	6.5	29	11 (12)	M6×0.75	6	11
LH25EM								M8×1.25×10 (M8×1.25×11.5)	6.8								
LH25HL					107			7×10 (7×11.5)	—		86	20.5					
LH25GM								M8×1.25×10 (M8×1.25×11.5)	6.8								
LH30FL	42	9	31	90	98.6	72	52	9×12 (9×14.5)	—	9	72	10	33	11 (15)	M6×0.75	7	11
LH30EM								M10×1.5×12 (M10×1.5×14.5)	8.6								
LH30HL					124.6			9×12(9×14.5)	—		98	23					
LH30GM								M10×1.5×12 (M10×1.5×14.5	8.6								
LH35FL	48	9.5	33	100	109	82	62	9×13	—	9	80	9	38.5	12	M6×0.75	8	11
LH35EM								M10×1.5×13	8.6								
LH35HL					143			9×13	—		114	26					
LH35GM								M10×1.5×13	8.6								
LH45FL	60	14	37.5	120	139	100	80	11×15	—	10	105	12.5	46	13	Rc1/8	10	13
LH45EM								M12×1.75×15	10.5								
LH45HL					171			11×15	—		137	28.5					
LH45GM								M12×1.75×15	10.5								
LH55FL	70	15	43.5	140	163	116	95	14×18	—	12	126	15.5	55	15	Rc1/8	11	13
LH55EM								M14×2×18	12.5								
LH55HL					201			14×18	—		164	34.5					
LH55GM								M14×2×18	12.5								
LH65FL	90	16	53.5	170	193	142	110	16×24	—	14	147	18.5	74	23	Rc1/8	19	13
LH65EM								M16×2×24	146								
LH65HL					253			16×24	—		207	48.5					
LH65GM								M16×2×24	14.6								
LH85HL	110	18	65	215	303	185	140	18×30	—	15	243	51.5	92	30	Rc1/8	23	13

Model No.	Rail Width W_1	Rail Height H_1	Rail Pitch F	Rail Mounting bolt hole $d \times D \times h$	Rail B_3	G (recommended)	aMax. length L_{0max}. ( ) for stainless	Basic load rating Dynamic C (N)	Basic load rating Static C_0 (N)	Static moment M_{RO} (N·m)	Static moment M_{PO} (N·m)	Static moment M_{YO} (N·m)	Ball dia. D_W	Weight Ball slide (kg)	Weight Rail (kg/m)
LH15FL	15	15	60	4.5×7.5×5.3	7.5	20	2000 (1800)	10800	20700	108	95	80	3.175	0.17	1.6
LH15EM															
LH15HL								14600	32000	166	216	181		0.25	
LH15GM															
LH20FL	20	18	60	6×9.5×8.5	10	20	3960 (3500)	17400	32500	219	185	155	3.968	0.45	2.6
LH20EM															
LH20HL								23500	50500	340	420	355		0.65	
LH20GM															
LH25FL	23	22	60	7×11×9	11.5	20	3960 (3500)	25600	46000	360	320	267	4.762	0.63	3.6
LH25EM															
LH25HL								34500	71000	555	725	610		0.93	
LH25GM															
LH30FL	28	26	80	9×14×12	14	20	4000 (3500)	35500	63000	600	505	425	5.556	1.2	5.2
LH30EM															
LH30HL								46000	91500	870	1030	865		1.6	
LH30GM															
LH35FL	34	29	80	9×14×12	17	20	4000	47500	80500	950	755	630	6.35	1.7	7.2
LH35EM															
LH35HL								61500	117000	1380	1530	1280		2.4	
LH35GM															
LH45FL	45	38	105	14×20×17	22.5	22.5	3990	81000	140000	2140	1740	1460	7.937	3	12.3
LH45EM															
LH45HL								99000	187000	2860	3000	2520		3.9	
LH45GM															
LH55FL	53	44	120	16×23×20	26.5	30	3990	119000	198000	3600	3000	2510	9.525	5	16.9
LH55EM															
LH55HL								146000	264000	4850	5150	4350		6.5	
LH55GM															
LH65FL	63	53	150	18×26×22	31.5	35	3900	181000	281000	6150	4950	4150	11.906	10	24.3
LH65EM															
LH65HL								235000	410000	8950	10100	8450		14.1	
LH65GM															
LH85HL	85	65	180	24×35×28	42.5	45	2520	345000	585000	17300	17400	14600	14.287	24.5	38.3

※Dimensions in parenthesis are for items made of stainless steel.
※LH85 is the item on order.
※The external appearance of stainless steel ball slides differs from those of standard material ball slide.

The basic dynamic load rating is a load that furnishes 50 km rating fatigue life; it is a vertical and constant load to the ball slide mounting surface.
When converting the basic dynamic load rating C to the dynamic load rating C_{100} for 100 km rating fatigue life, divide the C by 1.26

www.bergab.ru Берг АБ bergab@ya.ru Тел. (495)-228-06-21, факс (495) 223-3071

www.bergab.ru Берг АБ bergab@ya.ru Тел. (495)-228-06-21, факс (495) 223-3071

Dimensions of LH Series (Interchangeable ball slide)

LAH-AN (High load type)
LAH-BN (Super high load type)

• See Page A27 Reference Number of each interchangeable part.

LA H 30 AN S Z – K

- Interchangeable ball slide code
- Series
- Size
- Ball slide shape code (See Table I-2•2)
- Material code
  Default Standard material
  S: Stainless steel
  (Applicable only LH15-30)
- Preload code
  Default: Fine clearance
  Z: Slight preload
- Option code
  -K: Equipped with standard NSK K1
  -F: Fluoride low temperature chrome platin + standard grease
  -F50: Fluoride low temperature chrome platin + LG2 grease

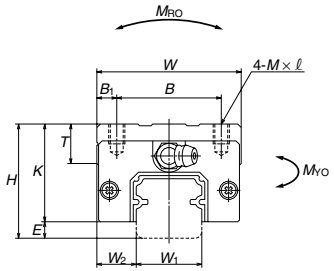

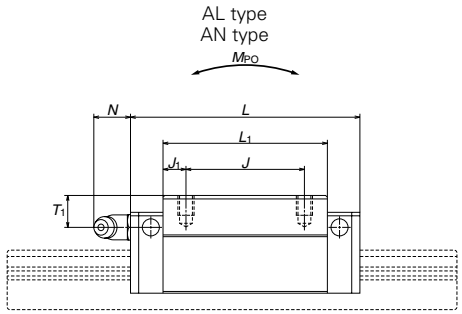

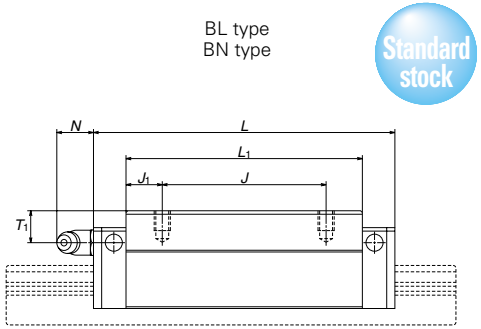

Table. I-5•4

Unit: mm

Model No.	Assembly Height H	E	W_2	Ball slide Width W	Length L	Mounting hole B	J	M×pitch×ℓ	B_1	L_1	J_1	K	T
LAH15AN	28	4.6	9.5	34	55	26	26	M4×0.7×6	4	39	6.5	23.4	8
LAH15BN					74					58	16		
LAH20AN	30	5	12	44	69.8	32	36	M5×0.8×6	6	50	7	25	12
LAH20BN					91.8		50			72	11		
LAH25AL	36	7	12.5	48	79	35	35	M6×1×6	6.5	58	11.5	29	12
LAH25AN	40							M6×1×9				33	
LAH25BL	36				107		50	M6×1×6		86	18	29	
LAH25BN	40							M6×1×9				33	
LAH30AL	42	9	16	60	85.6	40	40	M8×1.25×8	10	59	9.5	33	14
LAH30AN	45							M8×1.25×10				36	
LAH30BL	42				124.6		60	M8×1.25×8		98	19	33	
LAH30BN	45							M8×1.25×10				36	
LAH35AL	48	9.5	18	70	109	50	50	M8×1.25×8	10	80	15	38.5	15
LAH35AN	55							M8×1.25×12				45.5	
LAH35BL	48				143		72	M8×1.25×8		114	21	38.5	
LAH35BN	55							M8×1.25×12				45.5	
LAH45AN	70	14	20.5	86	139	60	60	M10×1.5×17	13	105	22.5	56	17
LAH45BN					171		80			137	28.5		
LAH55AN	80	15	23.5	100	163	75	75	M12×1.75×18	12.5	126	25.5	65	18
LAH55BN					201		95			164	34.5		
LAH65AN	90	16	31.5	126	193	76	70	M16×2×20	25	147	38.5	74	23
LAH65BN					253		120			207	43.5		

Model No.	Grease fitting Hole size	T_1	N	Basic load rating Dynamic C (N)	Static C_0 (N)	Static moment M_{RO} (N·m)	M_{PO} (N·m)	M_{YO} (N·m)	Ball dia. D_W	Weight Ball slide (kg)
LAH15AN	ϕ3	8.5	3.3	10800	20700	108	95	80	3.175	0.18
LAH15BN				14600	32000	166	216	181		0.26
LAH20AN	M6×0.75	5	11	17400	32500	219	185	155	3.968	0.33
LAH20BN				23500	50500	340	420	355		0.48
LAH25AL	M6×0.75	6	11	25600	46000	360	320	267	4.762	0.46
LAH25AN		10								0.55
LAH25BL		6		34500	71000	555	725	610		0.69
LAH25BN		10								0.82
LAH30AL	M6×0.75	7	11	31000	51500	490	350	292	5.556	0.69
LAH30AN		10								0.77
LAH30BL		7		46000	91500	870	1030	865		1.16
LAH30BN		10								1.3
LAH35AL	M6×0.75	8	11	47500	80500	950	755	630	6.350	1.2
LAH35AN		15								1.5
LAH35BL		8		61500	117000	1380	1530	1280		1.7
LAH35BN		15								2.1
LAH45AN	Rc1/8	20	13	81000	140000	2140	1740	1460	7.937	3.0
LAH45BN				99000	187000	2860	3000	2520		3.9
LAH55AN	Rc1/8	21	13	119000	198000	3600	3000	2510	9.525	4.7
LAH55BN				146000	264000	4850	5150	4350		6.1
LAH65AN	Rc1/8	19	13	181000	281000	6150	4950	4150	11.906	7.7
LAH65BN				235000	410000	8950	10100	8450		10.8

The basic dynamic load rating is a load that furnishes 50 km rating fatigue life, it is a vertical and constant load to the ball slide mounting surface.
When converting the basic dynamic load rating C to the dynamic load rating C_{100} for 100 km rating fatigue life, divide the C by 1.26

www.bergab.ru Берг АБ bergab@ya.ru Тел. (495)-228-06-21, факс (495) 223-3071

www.bergab.ru Берг АБ bergab@ya.ru Тел. (495)-228-06-21, факс (495) 223-3071

LAH-EL (High load type)
LAH-GL (Super high load type)

• See Page A27 Reference Number of each interchangeable part.

LA H 30 EL S Z – K

- Interchangeable ball slide code
- Series
- Size
- Ball slide shape code (See Table I-2•2)
- Material code
  Default Standard material
  S: Stainless steel
  (Applicable only LH15-30)
- Preload code
  Default: Fine clearance
  Z: Slight preload
- Option code
  -K: Equipped with standard NSK K1
  -F: Fluoride low temperature chrome platin + standard grease
  -F50: Fluoride low temperature chrome platin + LG2 grease

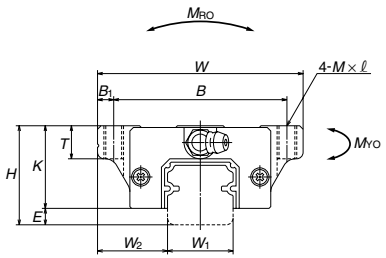

EL type

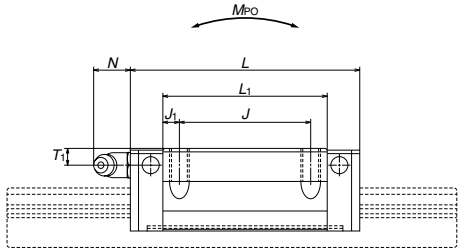

GL type

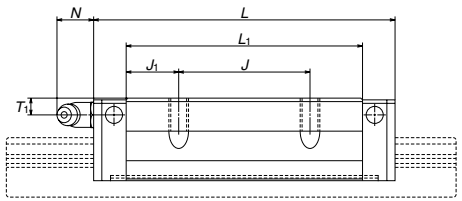

Table. I-5•5

Unit: mm

Model No.	Assembly Height H	E	W_2	Ball slide Width W	Length L	Mounting hole B	J	M × pitch × ℓ	B_1	L_1	J_1	K	T
LAH15EL	24	4.6	16	47	55	38	30	M5×0.8×8	4.5	39	4.5	19.4	8
LAH15GL					74					58	14		
LAH20EL	30	5	21.5	63	69.8	53	40	M6×1×10	5	50	5	25	10
LAH20GL					91.8					72	16		
LAH25EL	36	7	23.5	70	79	57	45	M8×1.25×16	6.5	58	6.5	29	11
LAH25GL					107			(M8×1.25×12)		86	20.5		(12)
LAH30EL	42	9	31	90	98.6	72	52	M10×1.5×18	9	72	10	33	11
LAH30GL					124.6			(M10×1.5×15)		98	23		(15)
LAH35EL	48	9.5	33	100	109	82	62	M10×1.5×20	9	80	9	38.5	12
LAH35GL					143					114	26		
LAH45EL	60	14	37.5	120	139	100	80	M12×1.75×24	10	105	12.5	46	13
LAH45GL					171					137	28.5		
LAH55EL	70	15	43.5	140	163	116	95	M14×2×28	12	126	15.5	55	15
LAH55GL					201					164	34.5		
LAH65EL	90	16	53.5	170	193	142	110	M16×2×24	14	147	18.5	74	23
LAH65GL					253					207	48.5		

Model No.	Grease fitting Hole size	T_1	N	Basic load rating Dynamic C (N)	Static C_0 (N)	Static moment M_{RO} (N·m)	M_{PO} (N·m)	M_{YO} (N·m)	Ball dia. D_W	Weight Ball slide (kg)
LAH15EL	ϕ3	4.5	3.3	10800	20700	108	95	80	3.175	0.17
LAH15GL				14600	32000	166	216	181		0.25
LAH20EL	M6×0.75	5	11	17400	32500	219	185	155	3.968	0.45
LAH20GL				23500	50500	340	420	355		0.65
LAH25EL	M6×0.75	6	11	25600	46000	360	320	267	4.762	0.63
LAH25GL				34500	71000	555	725	610		0.93
LAH30EL	M6×0.75	7	11	35500	63000	490	505	425	5.556	1.2
LAH30GL				46000	91500	870	1030	865		1.6
LAH35EL	M6×0.75	8	11	47500	80500	950	755	630	6.350	1.7
LAH35GL				61500	117000	1380	1530	1280		2.4
LAH45EL	Rc1/8	10	13	81000	140000	2140	1740	1460	7.937	3.0
LAH45GL				99000	187000	2860	3000	2520		3.9
LAH55EL	Rc1/8	11	13	119000	198000	3600	3000	2510	9.525	5.0
LAH55GL				146000	264000	4850	5150	4350		6.5
LAH65EL	Rc1/8	19	13	181000	281000	6150	4950	4150	11.906	10.0
LAH65GL				235000	410000	8950	10100	8450		14.1

※Dimensions in parenthesis are for items made of stainless steel.
※The external appearance of stainless steel ball slides differs from those of standard material ball slide.

The basic dynamic load rating is a load that furnishes 50 km rating fatigue life; it is a vertical and constant load to the ball slide mounting surface.
When converting the basic dynamic load rating C to the dynamic load rating C for 100 km rating fatigue life, divide the C by 1.26

www.bergab.ru Берг АБ bergab@ya.ru Тел. (495)-228-06-21, факс (495) 223-3071

www.bergab.ru Берг АБ bergab@ya.ru Тел. (495)-228-06-21, факс (495) 223-3071

LAH-EM
LAH-FL **(High load type)**
LAH-HL
LAH-GM **(Super high load type)**

• See Page A27 Reference Number of each interchangeable part.

LA H 30 FL S Z – K

- Interchangeable ball slide code
- Series
- Size
- Ball slide shape code (See Table I-2•2)
- Material code
  Default Standard material
  S: Stainless steel
  (Applicable only LH15-30)
- Preload code
  Default: Fine clearance
  Z: Slight preload
- Option code
  -K: Equipped with standard NSK K1
  -F: Fluoride low temperature chrome platin + standard grease
  -F50: Fluoride low temperature chrome platin + LG2 grease

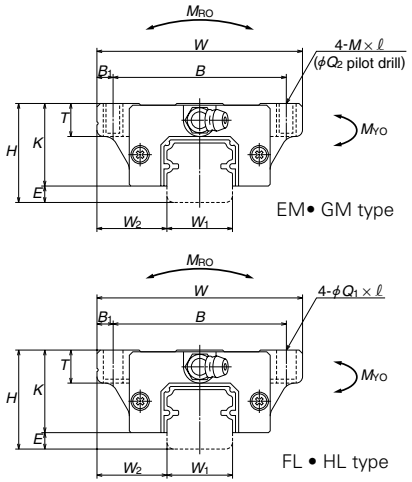

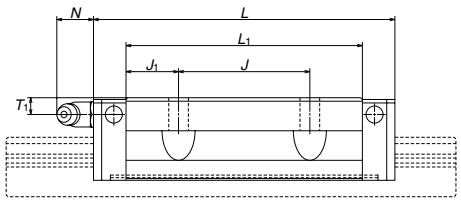

Table. I-5•6

Unit: mm

Model No.	Assembly Height H	E	W_2	Ball slide Width W	Length L	Mounting hole B	J	$Q_1 \times \ell$ M × pitch × ℓ	Q_2	B_1	L_1	J_1	K	T
LAH15FL	24	4.6	16	47	55	38	30	4.5×7	—	4.5	39	4.5	19.4	8
LAH15EM								M5×0.8×7	4.4					
LAH15HL					74			4.5×7	—		58	14		
LAH15GM								M5×0.8×7	4.4					
LAH20FL	30	5	21.5	63	69.8	53	40	6×9.5	—	5	50	5	25	10
LAH20EM								M6×1×9.5	5.3					
LAH20HL					91.8			6×9.5	—		72	16		
LAH20GM								M6×1×9.5	5.3					
LAH25FL	36	7	23.5	70	79	57	45	7×10 (7×11.5)	—	6.5	58	6.5	29	11 (12)
LAH25EM								M8×1.25×10 (M8×1.25×11.5)	6.8					
LAH25HL								7×10 (7×11.5)	—					
LAH25GM					107			M8×1.25×10 (M8×1.25×11.5)	6.8		86	20.5		
LAH30FL	42	9	31	90	98.6	72	52	9×12 (9×14.5)	—	9	72	10	33	11 (15)
LAH30EM								M10×1.5×12 (M10×1.5×14.5)	8.6					
LAH30HL								9×12 (9×14.5)	—					
LAH30GM					124.6			M10×1.5×12 (M10×1.5×14.5)	8.6		98	23		
LAH35FL	48	9.5	33	100	109	82	62	9×13	—	9	80	9	38.5	12
LAH35EM								M10×1.5×13	8.6					
LAH35HL					143			9×13	—		114	26		
LAH35GM								M10×1.5×13	8.6					
LAH45FL	60	14	37.5	120	139	100	80	11×15	—	10	105	12.5	46	13
LAH45EM								M12×1.75×15	10.5					
LAH45HL					171			11×15	—		137	28.5		
LAH45GM								M12×1.75×15	10.5					
LAH55FL	70	15	43.5	140	163	116	95	14×18	—	12	126	15.5	55	15
LAH55EM								M14×2×18	12.5					
LAH55HL					201			14×18	—		164	34.5		
LAH55GM								M14×2×18	12.5					
LAH65FL	90	16	53.5	170	193	142	110	16×24	—	14	147	18.5	74	23
LAH65EM								M16×2×24	146					
LAH65HL					253			16×24	—		207	48.5		
LAH65GM								M16×2×24	14.6					

Model No.	Grease fitting Hole size	T_1	N	Basic load rating Dynamic C (N)	Static C_0 (N)	Static moment M_{RO} (N·m)	M_{PO} (N·m)	M_{YO} (N·m)	Ball dia. D_W	Weight Ball slide (kg)
LAH15FL	φ3	4.5	3.3	10800	20700	108	95	80	3.175	0.17
LAH15EM				14600	32000	166	216	181		0.25
LAH20FL	M6×0.75	5	11	17400	32500	219	185	155	3.968	0.45
LAH20EM				23500	50500	340	420	355		0.65
LAH25FL	M6×0.75	6	11	25600	46000	360	320	267	4.762	0.63
LAH25EM				34500	71000	555	725	610		0.93
LAH30FL	M6×0.75	7	11	35500	63000	600	505	425	5.556	1.2
LAH30EM				46000	91500	870	1030	865		1.6
LAH35FL	M6×0.75	8	11	47500	80500	950	755	630	6.35	1.7
LAH35EM				61500	117000	1380	1530	1280		2.4
LAH45FL	Rc1/8	10	13	81000	140000	2140	1740	1460	7.937	3
LAH45EM				99000	187000	2860	3000	2520		3.9
LAH55FL	Rc1/8	11	13	119000	198000	3600	3000	2510	9.525	5
LAH55EM				146000	264000	4850	5150	4350		6.5
LAH65FL	Rc1/8	19	13	181000	281000	6150	4950	4150	11.906	10
LAH65EM				235000	410000	8950	10100	8450		14.1

※Dimensions in parenthesis are for items made of stainless steel.
※The external appearance of stainless steel ball slides differs from those of standard material ball slide.

The basic dynamic load rating is a load that furnishes 50 km rating fatigue life; it is a vertical and constant load to the ball slide mounting surface.
When converting the basic dynamic load rating C to the dynamic load rating C_{100} for 100 km rating fatigue life, divide the C by 1.26

www.bergab.ru Берг АБ bergab@ya.ru Тел. (495)-228-06-21, факс (495) 223-3071

www.bergab.ru Берг АБ bergab@ya.ru Тел. (495)-228-06-21, факс (495) 223-3071

Dimensions of LH Series (Interchangeable rail)

Standard stock

Example of reference number

Regular rail (non-butting rail)

L1 H 30 1200 L C N T PC Z**

- **interchangeable rail code**
- **Series code**
- **Size code**
- **Rail length (mm)**
- **Shape code (L: Standard)**
- **Material/surface treatment code (See Table I-4•1)**
- ***Butting rail specification**
  N: Non-butting
  L: Butting specification
- ***Design serial number**
  T: Domestic standard
  K: Domestic semi-standard
  B: International user standard
- **Accuracy code: PC**
  (PC grade is only available)
- **Preload code**
  T: Fine clearance
  Z: Slight preload

* Please consult with NSK for butting rail specification.

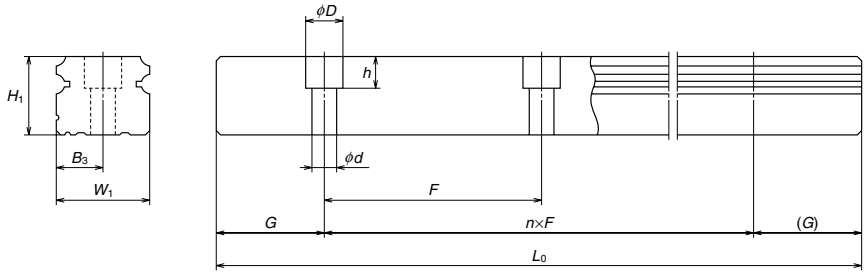

Table I-5•7

Unit: mm

Model No.	Rail							Weight
	Width W_1	Height H_1	Pitch F	Mounting bolt hole $d \times D \times h$	B_3	G Recommended	Max. length L_{0MAX} ( )for stainless	Rail (Kg / m)
L1H15	15	15	60	4.5×7.5×5.3	7.5	20	2000 (1800)	1.6
L1H20	20	18	60	6×9.5×8.5	10	20	3960 (3500)	2.6
L1H25	23	22	60	7×11×9	11.5	20	3960 (3500)	3.6
L1H30	28	26	80	9×14×12	14	20	4000 (3500)	5.2
L1H35	34	29	80	9×14×12	17	20	4000	7.2
L1H45	45	38	105	14×20×17	22.5	22.5	3990	12.3
L1H55	53	44	120	16×23×20	26.5	30	3960	16.9
L1H65	63	53	150	18×26×22	31.5	35	3900	24.3

G dimension is $1/2F^{0}_{-0.5}$ for butting rail.

A-I-5.2 LS Series

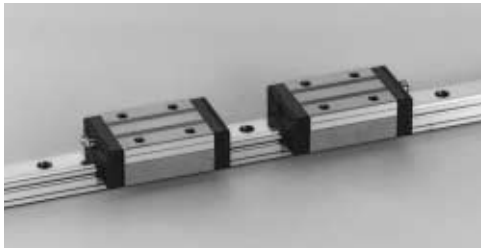

(1) High self aligning capability (rolling direction)

Same as the DF combination in angular contact bearings, self-aligning capability is high because the cross point of the contact lines of balls and grooves comes inside, reducing moment rigidity. This increases the capacity to absorb the error of installation.

(2) High load carrying capacity to vertical direction

The contact angle is set at 50 degrees, increasing load carrying capacity as well as rigidity against the load in vertical direction.

(3) High resistance against impact load

The bottom ball groove is formed in gothic-arch and the center of the top and bottom grooves are offset as shown in Fig. I-5•6. The vertical load is usually carried by top 2 rows at where balls are contacting at two points. Because of this design, the bottom rows will carry the load when a large impact load is applied as shown in Fig. I-5•7. This assures high resistance to the impact load.

(4) High accuracy

As shown in Fig. I-5•8, fixing the measuring rollers is simple thanks to the gothic-arch groove. This makes easy and accurate measuring of ball- grooves.

(5) Easy to handle, and designed with safety in mind.

Balls are retained in the retainer and do not fall out when the ball slide is withdrawn from the rail.

(6) Abundant models and sizes come in series.

Each series have several ball slide models, rendering the linear guide available for numerous uses. The LS Series also has standardized long stainless- steel rail (maximum: 3 500 mm).

(7) Interchangeable series is available (short delivery time)

The series enables random matching of rails and ball slides (interchangeability) for prompt delivery.

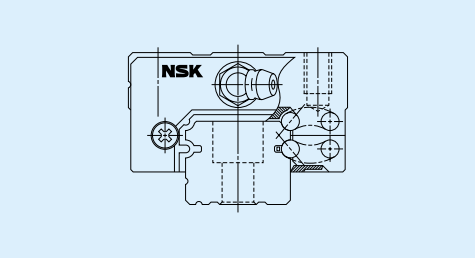

Fig. I-5•5 LS Series

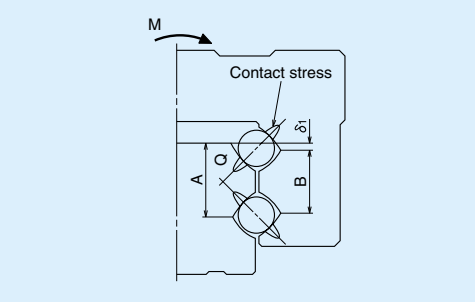

Fig. I-5•6 Enlarged illustration: Offset gothic-arch

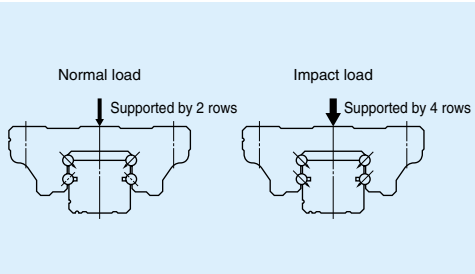

Fig. I-5•7 When load is applied

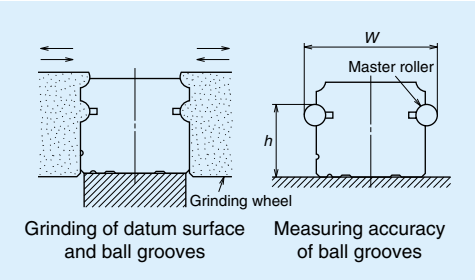

Fig. I-5•8 Rail-grinding and measuring

www.bergab.ru Берг АБ bergab@ya.ru Тел. (495)-228-06-21, факс (495) 223-3071

www.bergab.ru Берг АБ bergab@ya.ru Тел. (495)-228-06-21, факс (495) 223-3071

Dimensions of LS Series (Preloaded assembly)

LS-CL (Medium load type)
LS-AL (High load type)

LS 35 0840 AL C 2 – ** **PN 0 –Ⅱ**

- **Series**
- **Size**
- **Rail length (mm)**
- **Ball slide shape code**
- **Material/surface treatment code (See Page A27)**
  C: Standard (Special high carbon steel)
  K: Stainless steel (Applicable only LH15-30)
- **Number of ball slides per rail**
- *** Design serial number**
- **Accuracy code (See table Ⅰ-3·1 and Ⅰ-4·2)**
- **Preload code 0: Z0 / 1: Z1 / 3: Z3(See page A23)**
- ***-Ⅱ: Use two rails as a set. Default: One rail use**

* Please note that we assign the design number, and omit the last code (Ⅱ) that indicates a use of two rails as a set to finalize the reference number as product identification.

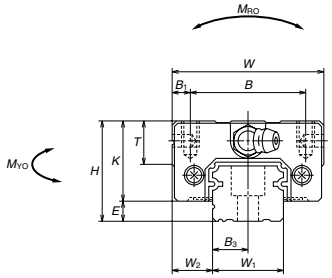

CL type

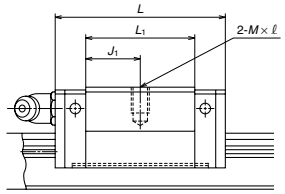

AL type

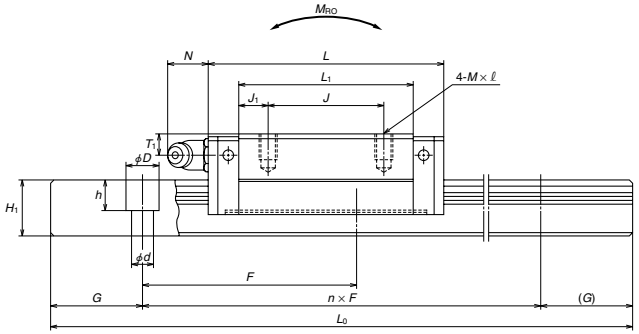

Table. Ⅰ-5•8

Unit: mm

Model No.	Assembly Height H	Assembly E	Assembly W_2	Ball slide Width W	Ball slide Length L	Mounting hole B	Mounting hole J	Mounting hole M×pitch×ℓ	B_1	L_1	J_1	K	T	Grease fitting Hole size	Grease fitting T_1	Grease fitting N
LS15CL	24	4.6	9.5	34	40.4	26	—	M4×0.7×6	4	23.6	11.8	19.4	10	φ3	6	3
LS15AL					56.8		26			40	7					
LS20CL	28	6	11	42	47.2	32	—	M5×0.8×7	5	30	15	22	12	M6×0.75	5.5	11
LS20AL					65.2		32			48	8					
LS25CL	33	7	12.5	48	59.6	35	—	M6×1×9	6.5	38	19	26	12	M6×0.75	7	11
LS25AL					81.6		35			60	12.5					
LS30CL	42	9	16	60	67.4	40	—	M8×1.25×12	10	42	21	33	13	M6×0.75	8	11
LS30AL					96.4		40			71	15.5					
LS35CL	48	10.5	18	70	77	50	—	M8×1.25×12	10	49	24.5	37.5	14	M6×0.75	8.5	11
LS35AL					108		50			80	15					

Model No.	Rail Width W_1	Rail Height H_1	Rail Pitch F	Rail Mounting bolt hole d×D×h	Rail B_3	Rail G (recommended)	Rail Max. length L_{0max}. ( ) for stainless	Basic load rating Dynamic C (N)	Basic load rating Static C_0 (N)	Static moment M_{RO} (N·m)	Static moment M_{PO} (N·m)	Static moment M_{YO} (N·m)	Ball dia. D_W	Weight Ball slide (kg)	Weight Rail (kg/m)
LS15CL	15	12.5	60	※ 3.5×6×4.5 4.5×7.5×5.3	7.5	20	2000 (1700)	5400	9100	46	25	21	2.778	0.14	1.4
LS15AL								8350	16900	85	77	65		0.20	
LS20CL	20	15.5	60	6×9.5×8.5	10	20	3960 (3500)	7900	13400	92	47	39	3.175	0.19	2.3
LS20AL								11700	23500	160	133	111		0.28	
LS25CL	23	18	60	7×11×9	11.5	20	3960 (3500)	12700	20800	164	91	76	3.968	0.34	3.1
LS25AL								18800	36500	286	258	217		0.51	
LS30CL	28	23	80	7×11×9	14	20	4000 (3500)	18700	29600	282	139	116	4.762	0.58	4.8
LS30AL								28800	55000	520	435	365		0.85	
LS35CL	34	27.5	80	9×14×12	17	20	4000 (3500)	26000	40000	465	220	185	5.556	0.86	7.0
LS35AL								40000	74500	865	695	580		1.3	

※Standard mounting hole of LS15 rail is for M3 bolts (Hole size: 3.5×6×4.5).
If you require the mounting hole for M4 bolts (Hole size: 4.5×7.5×5.3), please specify it when ordering.

The basic dynamic load rating is a load that furnishes 50 km rating fatigue life; it is a vertical and constant load to the ball slide mounting surface.
When converting the basic dynamic load rating C to the dynamic load rating C_{100} for 100 km rating fatigue life, divide the C by 1.26

www.bergab.ru Берг АБ bergab@ya.ru Тел. (495)-228-06-21, факс (495) 223-3071

www.bergab.ru Берг АБ bergab@ya.ru Тел. (495)-228-06-21, факс (495) 223-3071

LS-JL (Medium load type)
LS-EL (High load type)

LS 35 0840 EL C 2 – ** **PN 0 –Ⅱ**

- **Series**
- **Size**
- **Rail length (mm)**
- **Ball slide shape code**
- **Material/surface treatment code (See Page A27)**
  C: Standard (Special high carbon steel)
  K: Stainless steel (Applicable only LH15-30)
- **Number of ball slides per rail**
- *** Design serial number**
- **Accuracy code (See table Ⅰ-3·1 and Ⅰ-4·2)**
- **Preload code 0: Z0 / 1: Z1 / 3: Z3(See page A23)**
- ***-Ⅱ: Use two rails as a set. Default: One rail use**

* Please note that we assign the design number, and omit the last code (Ⅱ) that indicates a use of two rails as a set to finalize the reference number as product identification.

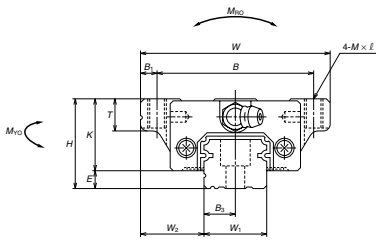

JL type

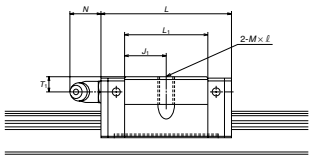

EL type

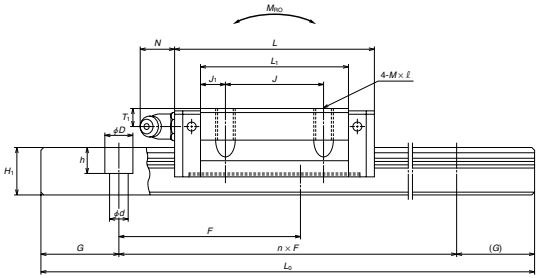

Table. Ⅰ-5•9

Unit: mm

Model No.	Assembly Height H	Assembly E	Assembly W_2	Ball slide Width W	Ball slide Length L	Mounting hole B	Mounting hole J	Mounting hole $M \times$ pitch $\times \ell$	B_1	L_1	J_1	K	T	Grease fitting Hole size	Grease fitting T_1	Grease fitting N
LS15JL	24	4.6	18.5	52	40.4	41	—	M5×0.8×8	5.5	23.6	11.8	19.4	8	ϕ3	6	3
LS15EL					56.8		26			40	7					
LS20JL	28	6	19.5	59	47.2	49	—	M6×1×10	5	30	15	22	10	M6×0.75	5.5	11
LS20EL					65.2		32			48	8					
LS25JL	33	7	25	73	59.6	60	—	M8×1.25×12	6.5	38	19	26	11	M6×0.75	7	11
LS25EL					81.6		35			60	12.5		(12)			
LS30JL	42	9	31	90	67.4	72	—	M10×1.5×18	9	42	21	33	11	M6×0.75	8	11
LS30EL					96.4		40	(M10×1.5×15)		71	15.5		(15)			
LS35JL	48	10.5	33	100	77	82	—	M10×1.5×20	9	49	24.5	37.5	12	M6×0.75	8.5	11
LS35EL					108		50	(M10×1.5×15)		80	15		(15)			

Model No.	Rail Width W_1	Rail Height H_1	Rail Pitch F	Rail Mounting bolt hole $d \times D \times h$	Rail B_3	Rail G (recommended)	Rail Max. length L_{0max}. ( ) for stainless	Basic load rating Dynamic C (N)	Basic load rating Static C_0 (N)	Static moment M_{RO} (N·m)	Static moment M_{PO} (N·m)	Static moment M_{YO} (N·m)	Ball dia. D_W	Weight Ball slide (kg)	Weight Rail (kg/m)
LS15JL	15	12.5	60	※ 3.5×6×4.5 4.5×7.5×5.3	7.5	20	2000 (1700)	5400	9100	46	25	21	2.778	0.17	1.4
LS15EL								8350	16900	85	77	65		0.26	
LS20JL	20	15.5	60	6×9.5×8.5	10	20	3960 (3500)	7900	13400	92	47	39	3.175	0.24	2.3
LS20EL								11700	23500	160	133	111		0.35	
LS25JL	23	18	60	7×11×9	11.5	20	3960 (3500)	12700	20800	164	91	76	3.968	0.44	3.1
LS25EL								18800	36500	286	258	217		0.66	
LS30JL	28	23	80	7×11×9	14	20	4000 (3500)	18700	29600	282	139	116	4.762	0.76	4.8
LS30EL								28800	55000	520	435	365		1.2	
LS35JL	34	27.5	80	9×14×12	17	20	4000 (3500)	26000	40000	465	220	185	5.556	1.2	7.0
LS35EL								40000	74500	865	695	580		1.7	

※Standard mounting hole of LS15 rail is for M3 bolts (Hole size: 3.5×6×4.5).
If you require the mounting hole for M4 bolts (Hole size: 4.5×7.5×5.3), please specify it when ordering.
※The external appearance of stainless steel ball slides differs from those of standard material ball slide.

The basic dynamic load rating is a load that furnishes 50 km rating fatigue life; it is a vertical and constant load to the ball slide mounting surface.
When converting the basic dynamic load rating C to the dynamic load rating C_{100} for 100 km rating fatigue life, divide the C by 1.26

www.bergab.ru Берг АБ bergab@ya.ru Тел. (495)-228-06-21, факс (495) 223-3071

www.bergab.ru Берг АБ bergab@ya.ru Тел. (495)-228-06-21, факс (495) 223-3071

LS-KL (Medium load type)
LS-FL (High load type)

LS 35 0840 FL C 2 – PN 0 –Ⅱ

- **Series**
- **Size**
- **Rail length (mm)**
- **Ball slide shape code**
- **Material/surface treatment code (See Page A27)**
  C: Standard (Special high carbon steel)
  K: Stainless steel (Applicable only LH15-30)
- **Number of ball slides per rail**
- *** Design serial number**
- **Accuracy code (See table Ⅰ-3·1 and Ⅰ-4·2)**
- Preload code 0: Z0
  1: Z1
  3: Z3(See page A23)
- *-Ⅱ: Use two rails as a set.
  Default: One rail use

* Please note that we assign the design number, and omit the last code (Ⅱ) that indicates a use of two rails as a set to finalize the reference number as product identification.

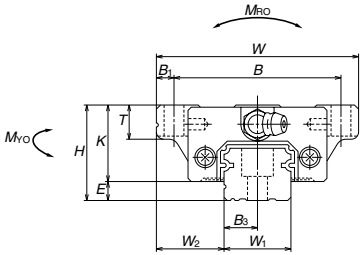

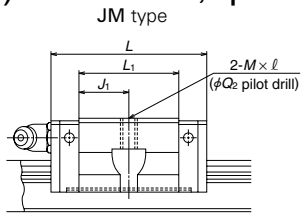

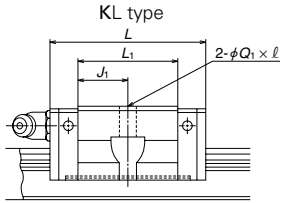

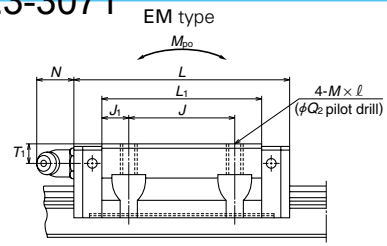

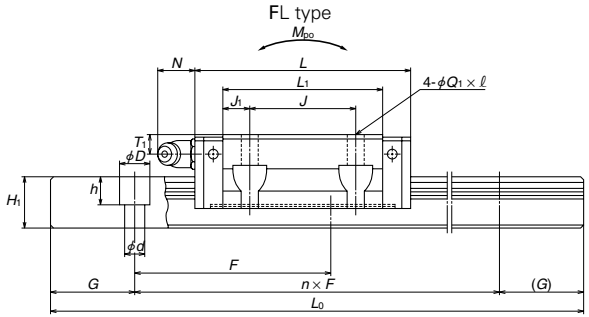

Unit: mm

Table. Ⅰ-5•10

Model No.	Assembly Height H	Assembly E	Assembly W_2	Ball slide Width W	Ball slide Length L	Mounting hole B	Mounting hole J	Mounting hole $Q_1 \times \ell$	Mounting hole Q_2	B_1	L_1	J_1	K	T	Grease fitting Hole size	Grease fitting T_1	Grease fitting N
LS15KL	24	4.6	18.5	52	40.4	41	—	4.5×7	—	5.5	23.6	11.8	19.4	8	φ3	6	3
LS15JM								M5×0.8×7	4.4								
LS15FL					56.8		26	4.5×7	—		40	7					
LS15EM								M5×0.8×7	4.4								
LS20KL	28	6	19.5	59	47.2	49	—	5.5×9 (5.5×9.5)	—	5	30	15	22	10	M6×0.75	5.5	11
LS20JM								M6×1×9 (M6×1×9.5)	5.3								
LS20FL					65.2		32	5.5×9 (5.5×9.5)	—		48	8					
LS20EM								M6×1×9 (M6×1×9.5)	5.3								
LS25KL	33	7	25	73	59.6	60	—	7×10 (7×11.5)	—	6.5	38	19	26	11 (12)	M6×0.75	7	11
LS25JM								M8×1.25×10 (M8×1.25×11.5)	6.8								
LS25FL					81.6		35	7×10 (7×11.5)	—		60	12.5					
LS25EM								M8×1.25×10 (M8×1.25×11.5)	6.8								
LS30KL	42	9	31	90	67.4	72	—	9×12 (9×14.5)	—	9	42	21	33	11 (15)	M6×0.75	8	11
LS30JM								M10×1.5×12 (M10×1.5×14.5)	8.6								
LS30FL					96.4		40	9×12 (9×14.5)	—		71	15.5					
LS30EM								M10×1.5×12 (M10×1.5×14.5)	8.6								
LS35KL	48	10.5	33	100	77	82	—	9×13 (9×14.5)	—	9	49	24.5	37.5	12 (15)	M6×0.75	8.5	11
LS35JM								M10×1.5×13 (M10×1.5×14.5)	8.6								
LS35FL					108		50	9×13 (9×14.5)	—		80	15					
LS35EM								M10×1.5×13 (M10×1.5×14.5)	8.6								

Model No.	Rail Width W_1	Rail Height H_1	Rail Pitch F	Mounting bolt hole $d \times D \times h$	B_3	G (recommended)	Max. length L_{0max}. ( ) for stainless	Basic load rating Dynamic C (N)	Basic load rating Static C_0 (N)	Static moment M_{RO} (N·m)	Static moment M_{PO} (N·m)	Static moment M_{YO} (N·m)	Ball dia. D_W	Weight Ball slide (kg)	Weight Rail (kg/m)
LS15KL	15	12.5	60	※ 3.5×6×4.5	7.5	20	2000 (1700)	5400	9100	46	25	21	2.778	0.17	1.4
LS15JM				4.5×7.5×5.3											
LS15FL								8350	16900	85	77	65		0.26	
LS15EM															
LS20KL	20	15.5	60	6×9.5×8.5	10	20	3960 (3500)	7900	13400	92	47	39	3.175	0.24	2.3
LS20JM															
LS20FL								11700	23500	160	133	111		0.35	
LS20EM															
LS25KL	23	18	60	7×11×9	11.5	20	3960 (3500)	12700	20800	164	91	76	3.968	0.44	3.1
LS25JM															
LS25FL								18800	36500	286	258	217		0.66	
LS25EM															
LS30KL	28	23	80	7×11×9	14	20	4000 (3500)	18700	29600	282	139	116	4.762	0.76	4.8
LS30JM															
LS30FL								28800	55000	520	435	365		1.2	
LS30EM															
LS35KL	34	27.5	80	9×14×12	17	20	4000 (3500)	26000	40000	465	220	185	5.556	1.2	7
LS35JM															
LS35FL								40000	74500	865	695	580		1.7	
LS35EM															

※Standard mounting hole of LS15 rail is for M3 bolts (Hole size: 3.5×6×4.5).
If you require the mounting hole for M4 bolts (Hole size: 4.5×7.5×5.3), please specify it when ordering.
※The external appearance of stainless steel ball slides differs from those of standard material ball slide.

The basic dynamic load rating is a load that furnishes 50 km rating fatigue life; it is a vertical and constant load to the ball slide mounting surface.
When converting the basic dynamic load rating C to the dynamic load rating C_{100} for 100 km rating fatigue life, divide the C by 1.26

www.bergab.ru Берг АБ bergab@ya.ru Тел. (495)-228-06-21, факс (495) 223-3071

www.bergab.ru Берг АБ bergab@ya.ru Тел. (495)-228-06-21, факс (495) 223-3071

Dimensions of LS Series (Interchangeable ball slide)

LAS-CL (Medium load type)
LAS-AL (High load type)

• See Page A27 Reference Number of each interchangeable part.

LA S 30 AL S Z – K

- Interchangeable ball slide code
- Series
- Size
- Ball slide shape code (See Table I-2•2)
- Material code
  Default Standard material
  S: Stainless steel
- Preload code
  Default: Fine clearance
  Z: Slight preload
- Option code
  -K: Equipped with standard NSK K1
  -F: Fluoride low temperature chrome platin + standard grease
  -F50: Fluoride low temperature chrome platin + LG2 grease

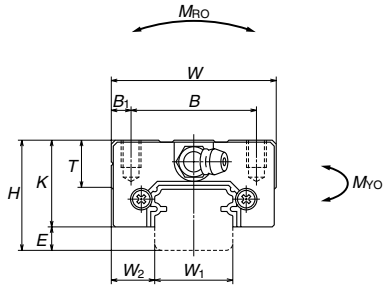

CL type

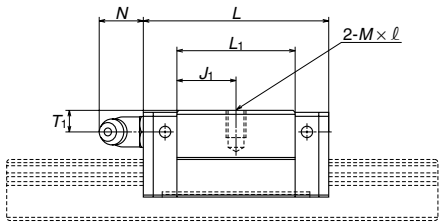

AL type

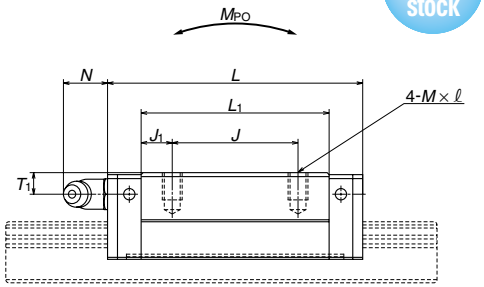

Table. I-5•11

Unit: mm

Model No.	Assembly Height H	Assembly E	Assembly W_2	Ball slide Width W	Ball slide Length L	Mounting hole B	Mounting hole J	Mounting hole M × pitch × ℓ	B_1	L_1	J_1	K	T
LAS15CL	24	4.6	9.5	34	40.4	26	—	M4×0.7×6	4	23.6	11.8	19.4	10
LAS15AL					56.8		26			40	7		
LAS20CL	28	6	11	42	47.2	32	—	M5×0.8×7	5	30	15	22	12
LAS20AL					65.2		32			48	8		
LAS25CL	33	7	12.5	48	59.6	35	—	M6×1×9	6.5	38	19	26	12
LAS25AL					81.6		35			60	12.5		
LAS30CL	42	9	16	60	67.4	40	—	M8×1.25×12	10	42	21	33	13
LAS30AL					96.4		40			71	15.5		
LAS35CL	48	10.5	18	70	77	50	—	M8×1.25×12	10	49	24.5	37.5	14
LAS35AL					108		50			80	15		

Model No.	Grease fitting Hole size	Grease fitting T_1	Grease fitting N	Basic load rating Dynamic C (N)	Basic load rating Static C_0 (N)	Static moment M_{RO} (N·m)	Static moment M_{PO} (N·m)	Static moment M_{YO} (N·m)	Ball dia. D_W	Weight Ball slide (kg)
LAS15CL	ϕ 3	6	3	5400	9100	46	25	21	2.778	0.14
LAS15AL				8350	16900	85	77	65		0.20
LAS20CL	M6×0.75	5.5	11	7900	13400	92	47	39	3.175	0.19
LAS20AL				11700	23500	160	133	111		0.28
LAS25CL	M6×0.75	7	11	12700	20800	164	91	76	3.968	0.34
LAS25AL				18800	36500	286	258	217		0.51
LAS30CL	M6×0.75	8	11	18700	29600	282	139	116	4.762	0.58
LAS30AL				28800	55000	520	435	365		0.85
LAS35CL	M6×0.75	8.5	11	26000	40000	465	220	185	5.556	0.86
LAS35AL				40000	74500	865	695	580		1.3

The basic dynamic load rating is a load that furnishes 50 km rating fatigue life; it is a vertical and constant load to the ball slide mounting surface.
When converting the basic dynamic load rating C to the dynamic load rating C_{100} for 100 km rating fatigue life, divide the C by 1.26

www.bergab.ru Берг АБ bergab@ya.ru Тел. (495)-228-06-21, факс (495) 223-3071

www.bergab.ru Берг АБ bergab@ya.ru Тел. (495)-228-06-21, факс (495) 223-3071

LAS-EL (High load type)
LAS-EM

• See Page A27 Reference Number of each interchangeable part.

LA S 30 EL S Z – K

- Interchangeable ball slide code
- Series
- Size
- Ball slide shape code (See Table I-2•2)
- Material code
  Default Standard material
  S: Stainless steel
- Preload code
  Default: Fine clearance
  Z: Slight preload
- Option code
  -K: Equipped with standard NSK K1
  -F: Fluoride low temperature chrome platin + standard grease
  -F50: Fluoride low temperature chrome platin + LG2 grease

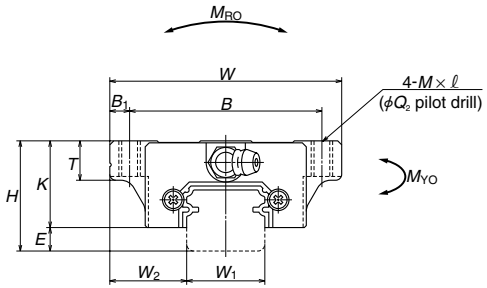

EM type

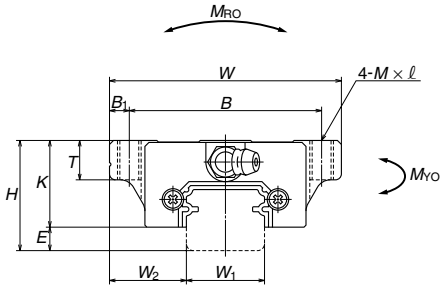

EL type

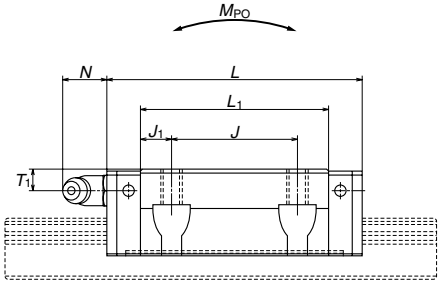

EM type

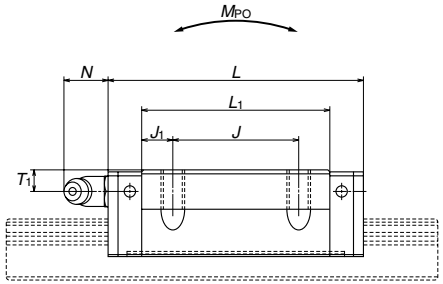

EL type

Table. I-5•12

Unit: mm

Model No.	Assembly: Height H	Assembly: E	Assembly: W_2	Ball slide: Width W	Ball slide: Length L	Mounting hole: B	Mounting hole: J	Mounting hole: M × pitch × ℓ	Mounting hole: Q_2	Ball slide: B_1	Ball slide: L_1	Ball slide: J_1	Ball slide: K	Ball slide: T
LAS15EL	24	4.6	18.5	52	56.8	41	26	M5×0.8×8	—	5.5	40	7	19.4	8
LAS15EM								M5×0.8×7	4.4					
LAS20EL	28	6	19.5	59	65.2	49	32	M6×1×10	—	5	48	8	22	10
LAS20EM								M6×1×9 (M6×1×9.5)	5.3					
LAS25EL	33	7	25	73	81.6	60	35	M8×1.25×12	—	6.5	60	12.5	26	11
LAS25EM								M8×1.25×10 (M8×1.25×11.5)	6.8					
LAS30EL	42	9	31	90	96.4	72	40	M10×1.5×18 (M10×1.5×15)	—	9	71	15.5	33	11 (15)
LAS30EM								M10×1.5×12 (M10×1.5×14.5)	8.6					
LAS35EL	48	10.5	33	100	108	82	50	M10×1.5×20 (M10×1.5×15)	—	9	80	15	37.5	12 (15)
LAS35EM								M10×1.5×13 (M10×1.5×14.5)	8.6					

Model No.	Grease fitting: Hole size	Grease fitting: T_1	Grease fitting: N	Basic load rating: Dynamic C (N)	Basic load rating: Static C_0 (N)	Static moment: M_{RO} (N·m)	Static moment: M_{PO} (N·m)	Static moment: M_{YO} (N·m)	Ball dia. D_W	Weight: Ball slide (kg)
LAS15EL / **LAS15EM**	ϕ 3	6	3	8350	16900	85	77	65	2.778	0.26
LAS20EL / **LAS20EM**	M6×0.75	5.5	11	11700	23500	160	133	111	3.175	0.35
LAS25EL / **LAS25EM**	M6×0.75	7	11	18800	36500	286	258	217	3.968	0.66
LAS30EL / **LAS30EM**	M6×0.75	8	11	28800	55000	520	435	365	4.762	1.2
LAS35EL / **LAS35EM**	M6×0.75	8.5	11	40000	74500	865	695	580	5.556	1.7

※Dimensions in parenthesis are for items made of stainless steel.
※The external appearance of stainless steel ball slides differs from those of standard material ball slide.

The basic dynamic load rating is a load that furnishes 50 km rating fatigue life; it is a vertical and constant load to the ball slide mounting surface.
When converting the basic dynamic load rating C to the dynamic load rating C_{100} for 100 km rating fatigue life, divide the C by 1.26

www.bergab.ru Берг АБ bergab@ya.ru Тел. (495)-228-06-21, факс (495) 223-3071

www.bergab.ru Берг АБ bergab@ya.ru Тел. (495)-228-06-21, факс (495) 223-3071

LAS-KL (Medium load type)
LAS-FL (High load type)

• See Page A27 Reference Number of each interchangeable part.

LA S 30 FL S Z – K

- Interchangeable ball slide code
- Series
- Size
- Ball slide shape code (See Table I-2•2)
- Material code
  Default Standard material
  S: Stainless steel
- Preload code
  Default: Fine clearance
  Z: Slight preload
- Option code
  -K: Equipped with standard NSK K1
  -F: Fluoride low temperature chrome platin + standard grease
  -F50: Fluoride low temperature chrome platin + LG2 grease

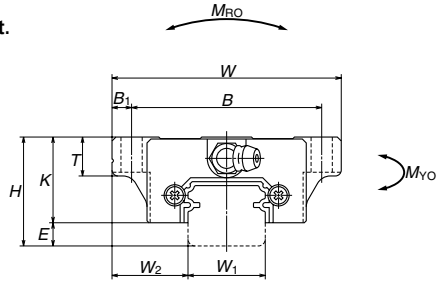

KL type

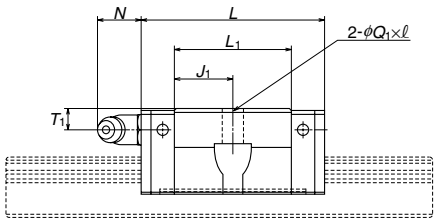

FL type

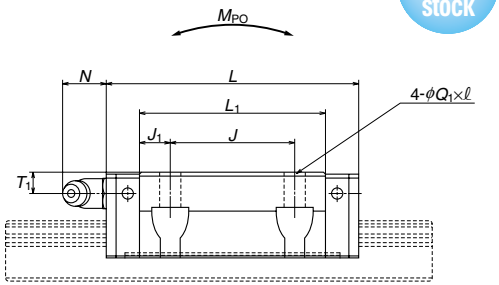

Table. I-5•13

Unit: mm

Model No.	Assembly Height H	Assembly E	Assembly W_2	Ball slide Width W	Ball slide Length L	Mounting hole B	Mounting hole J	Mounting hole $Q_1 \times \ell$	B_1	L_1	J_1	K	T
LAS15KL	24	4.6	18.5	52	40.4	41	—	4.5×7	5.5	23.6	11.8	19.4	8
LAS15FL					56.8		26			40	7		
LAS20KL	28	6	19.5	59	47.2	49	—	5.5×9	5	30	15	22	10
LAS20FL					65.2		32	(5.5×9.5)		48	8		
LAS25KL	33	7	25	73	59.6	60	—	7×10	6.5	38	19	26	11
LAS25FL					81.6		35	(7×11.5)		60	12.5		(12)
LAS30KL	42	9	31	90	67.4	72	—	9×12	9	42	21	33	11
LAS30FL					96.4		40	(9×14.5)		71	15.5		(15)
LAS35KL	48	10.5	33	100	77	82	—	9×13	9	49	24.5	37.5	12
LAS35FL					108		50	(9×14.5)		80	15		(15)

※Dimensions in parenthesis are for items made of stainless steel.
※The external appearance of stainless steel ball slides differs from those of standard material ball slide.

Model No.	Grease fitting Hole size	Grease fitting T_1	Grease fitting N	Basic load rating Dynamic C (N)	Basic load rating Static C_0 (N)	Static moment M_{RO} (N · m)	Static moment M_{PO} (N · m)	Static moment M_{YO} (N · m)	Ball dia. D_W	Weight Ball slide (kg)
LAS15KL	ϕ 3	6	3	5400	9100	46	25	21	2.778	0.17
LAS15FL				8350	16900	85	77	65		0.26
LAS20KL	M6×0.75	5.5	11	7900	13400	92	47	39	3.175	0.24
LAS20FL				11700	23500	160	133	111		0.35
LAS25KL	M6×0.75	7	11	12700	20800	164	91	76	3.968	0.44
LAS25FL				18800	36500	286	258	217		0.66
LAS30KL	M6×0.75	8	11	18700	29600	282	139	116	4.762	0.76
LAS30FL				28800	55000	520	435	365		1.2
LAS35KL	M6×0.75	8.5	11	26000	40000	465	220	185	5.556	1.2
LAS35FL				40000	74500	865	695	580		1.7

The basic dynamic load rating is a load that furnishes 50 km rating fatigue life; it is a vertical and constant load to the ball slide mounting surface.
When converting the basic dynamic load rating C to the dynamic load rating C_{100} for 100 km rating fatigue life, divide the C by 1.26

www.bergab.ru Берг АБ bergab@ya.ru Тел. (495)-228-06-21, факс (495) 223-3071

www.bergab.ru Берг АБ bergab@ya.ru Тел. (495)-228-06-21, факс (495) 223-3071

Dimensions of LS Series (Interchangeable rail)

Standard stock

Example of reference number

Regular rail (non-butting rail)

L1 S 15 1000 L C N T PC Z**

- interchangeable rail code
- Series code
- Size code
- Rail length (mm)
- Shape code (See page 27)
  (L : standard, LS15 mouting hole for M3 specification T:LS15 mouting hole for M4 specification)
- Material/surface treatment code (See Table I-4•1)
- *Butting rail specification
  N: Non-butting
  L: Butting specification
- *Design serial number
  T: Domestic standard
  K: Domestic semi-standard
  B: International user standard
- Accuracy code: PC
  (PC grade is only available)
- Preload code
  T: Fine clearance
  Z: Slight preload

* Please consult with NSK for butting rail specification.

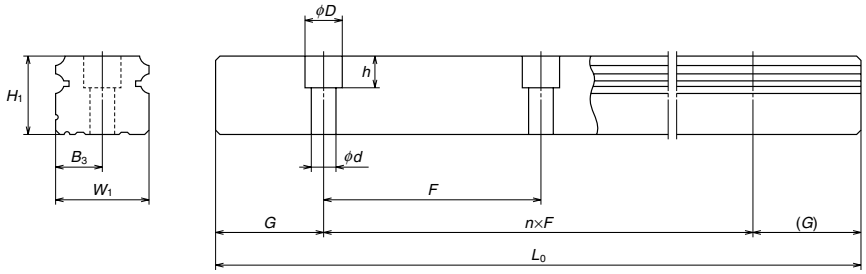

Table I-5•14

Unit: mm

Model No.	Rail							Weight
	Width W_1	Height H_1	Pitch F	Mounting bolt hole $d \times D \times h$	B_3	G Recommended	Max. length L_{0MAX}. ( ) for stainless	Rail (Kg / m)
L1S15	15	12.5	60	3.5×6×4.5* 4.5×7.5×5.3	7.5	20	2000 (1700)	1.4
L1S20	20	15.5	60	6×9.5×8.5	10	20	3960 (3500)	2.3
L1S25	23	18	60	7×11×9	11.5	20	3960 (3500)	3.1
L1S30	28	23	80	7×11×9	14	20	4000 (3500)	4.8
L1S35	34	27.5	80	9×14×12	17	20	4000 (3500)	7.0

G dimension is $1/2F^{0}_{-0.5}$ for butting rail.

* **Standard mounting hole of LS15 rail is for M3 bolts (Hole size: 3.5×6×4.5).**
If you require the mounting hole for M4 bolts (Hole size: 4.5×7.5×5.3), please specify it when ordering.

A-I-5.3 LA Series

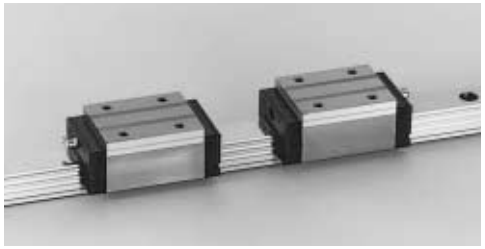

(1) High rigidity and high load carrying capacity

A set of three ball grooves is made on both sides. This contributes to the increased rigidity and load carrying capacity. The top and bottom groove are formed in the circular arc with a closer radius of ball, which ensures great rigidity and load carrying capacity. With the gothic-arch center groove, rigidity and load carrying capacity are further increased.

(2) Moderate friction

A well-balanced combination of 2-point contacts at the top and bottom grooves and 4 points contact at the center groove provides moderate friction while ensuring rigidity by appropriate preload.

(3) Load distribution four directions

Contact angle is set at 45 degrees in all grooves, dispersing the load to four rows irrespective of load direction. This realizes equal rigidity and load carrying capacity in vertical and lateral directions and provides well-balanced design.

(4) Strong against shock load

Load from any direction, vertical and lateral, is received by four rows at all times. The number of the row which receives the load is larger than in other linear guides, making this series stronger against shock load.

(5) High accuracy

Fixing the measuring rollers is easy thanks to the gothic-arch groove. Ball-groove measuring is accurate and simple. This benefits a highly precise and stable manufacturing.

(6) The dust protection design

The rail's cross section is designed as simple as possible. Furthermore, the improved seal enhances the sealing function. Inner seal is available as an option.

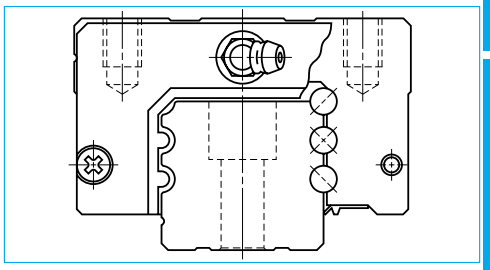

Fig. I-5•9 LA Series

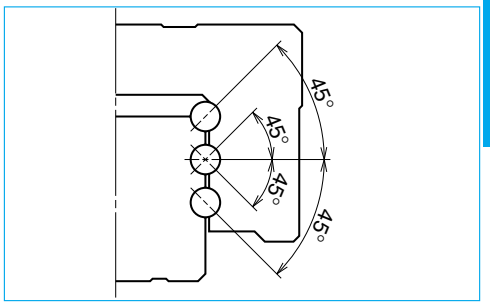

Fig. I-5•10 Super rigidity design

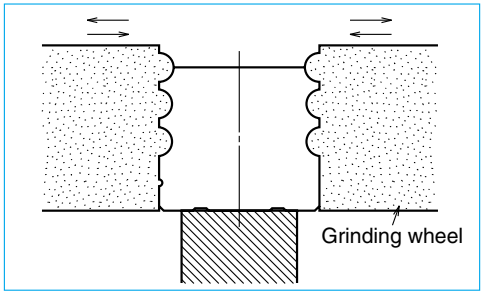

Fig. I-5•11 Rail grinding

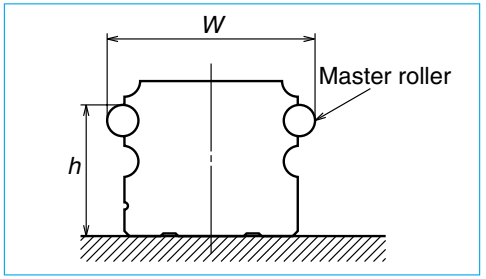

Fig. I-5•12 Measuring groove accuracy

www.bergab.ru Берг АБ bergab@ya.ru Тел. (495)-228-06-21, факс (495) 223-3071

www.bergab.ru Берг АБ bergab@ya.ru Тел. (495)-228-06-21, факс (495) 223-3071

Dimensions of LA Series (Preloaded assembly)

LA-AL (High load type)
LA-BL (Super high load type)

LA 35 0840 AL C 2 – P6 3 –Ⅱ**

- **Series**
- **Size**
- **Rail length (mm)**
- **Ball slide shape code**
- **Material/surface treatment code (See Page A27)**
- **Number of ball slides per rail**
- *** Design serial number**
- **Accuracy code (See table Ⅰ-3·1 and Ⅰ-4·2)**
- **Preload code 3: Z3 4: Z4(See page A23)**
- ***-Ⅱ: Use two rails as a set. Default: One rail use**

* Please note that we assign the design number, and omit the last code (Ⅱ) that indicates a use of two rails as a set to finalize the reference number as product identification.

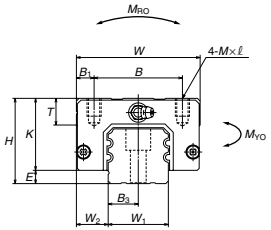

AL type

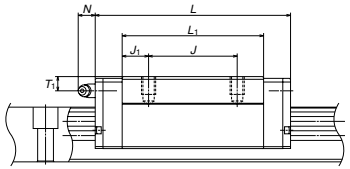

BL type

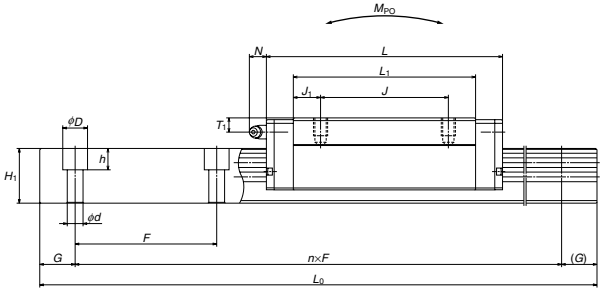

Table. Ⅰ-5•15

Unit: mm

Model No.	Assembly Height H	Assembly E	Assembly W_2	Ball slide Width W	Ball slide Length L	Mounting hole B	Mounting hole J	Mounting hole M×pitch×ℓ	B_1	L_1	J_1	K	T	Grease fitting Hole size	T_1	N
LA25AL	36	5.5	12.5	48	79.8	35	35	M6×1×7	6.5	58	11.5	30.5	8	M6×0.75	6	11
LA25BL					107.8		50			86	18					
LA30AL	42	7.5	16	60	100.2	40	40	M8×1.25×10	10	72	16	34.5	11	M6×0.75	6.5	11
LA30BL					126.2		60			98	19					
LA35AL	48	7.5	18	70	110.6	50	50	M8×1.25×10	10	80	15	40.5	15	M6×0.75	8	11
LA35BL					144.6		72			114	21					
LA45AL	60	10	20.5	86	141.4	60	60	M10×1.5×16	13	105	22.5	50	17	Rc1/8	10	13
LA45BL					173.4		80			137	28.5					
LA55AL	70	12	23.5	100	165.4	75	75	M12×1.75×16	12.5	126	25.5	58	18	Rc1/8	11	13
LA55BL					203.4		95			164	34.5					

Model No.	Rail Width W_1	Rail Height H_1	Rail Pitch F	Rail Mounting bolt hole d×D×h	Rail B_3	Rail G (recommended)	Rail Max. length L_{0max}	Basic load rating Dynamic C (N)	Basic load rating Static C_0 (N)	Static moment M_{RO} (N · m)	Static moment M_{PO} (N · m)	Static moment M_{YO} (N · m)	Ball dia. D_W	Weight Ball slide (kg)	Weight Rail (kg/m)
LA25AL	23	22	60	7×11×9	11.5	20	3960	30000	50000	290	410	410	3.968	0.5	3.7
LA25BL								40500	77000	445	935	935		0.8	
LA30AL	28	28	80	9×14×12	14	20	4000	47000	77500	535	820	820	4.762	0.8	5.8
LA30BL								58000	105000	725	1470	1470		1.2	
LA35AL	34	30.8	80	9×14×12	17	20	4000	61500	98000	845	1130	1130	5.556	1.3	7.7
LA35BL								80500	143000	1240	2330	2330		1.6	
LA45AL	45	36	105	14×20×17	22.5	22.5	3990	91000	148000	1840	2210	2210	6.350	2.5	12.0
LA45BL								111000	197000	2460	3850	3850		3.2	
LA55AL	53	43.2	120	16×23×20	26.5	30	3960	139000	215000	3150	3800	3800	7.937	3.9	17.2
LA55BL								172000	292000	4250	6800	6800		5.1	

LA Series does not have a ball retainer. Be aware that balls fall out when the ball slider is withdrawn from the rail.
** LA25AL, BL and LA30AL, BL are the items on order. Please consult with NSK.

The basic dynamic load rating is a load that furnishes 50 km rating fatigue life; it is a vertical and constant load to the ball slide mounting surface.
When converting the basic dynamic load rating C to the dynamic load rating C_{100} for 100 km rating fatigue life, divide the C by 1.26

www.bergab.ru Берг АБ bergab@ya.ru Тел. (495)-228-06-21, факс (495) 223-3071

www.bergab.ru Берг АБ bergab@ya.ru Тел. (495)-228-06-21, факс (495) 223-3071

LA-AN (High load type)
LA-BN (Super high load type)

LA 35 0840 AN C 2 – ** **P6 3 –Ⅱ**

- **Series**
- **Size**
- **Rail length (mm)**
- **Ball slide shape code**
- **Material/surface treatment code (See Page A27)**
- **Number of ball slides per rail**
- *** Design serial number**
- **Accuracy code (See table Ⅰ-3·1 and Ⅰ-4·2)**
- **Preload code 3: Z3 4: Z4(See page A23)**
- ***-Ⅱ: Use two rails as a set. Default: One rail use**

* Please note that we assign the design number, and omit the last code (Ⅱ) that indicates a use of two rails as a set to finalize the reference number as product identification.

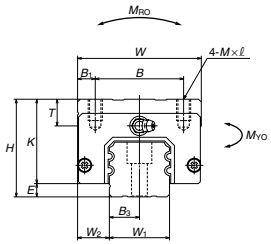

AN type

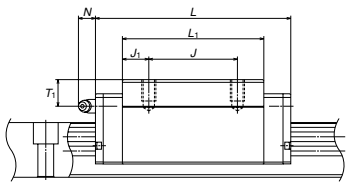

BN type

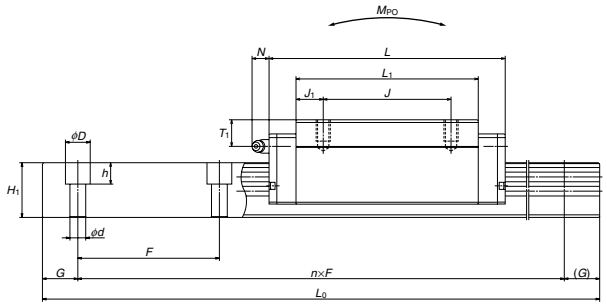

Table. Ⅰ-5•16

Unit: mm

Model No.	Assembly Height H	Assembly E	Assembly W_2	Ball slide Width W	Ball slide Length L	Mounting hole B	Mounting hole J	Mounting hole M×pitch×ℓ	B_1	L_1	J_1	K	T	Grease fitting Hole size	Grease fitting T_1	Grease fitting N
LA25AN	40	5.5	12.5	48	79.8	35	35	M6×1×10	6.5	58	11.5	34.5	12	M6×0.75	10	11
LA25BN					107.8		50			86	18					
LA30AN	45	7.5	16	60	100.2	40	40	M8×1.25×11	10	72	16	37.5	14	M6×0.75	9.5	11
LA30BN					126.2		60			98	19					
LA35AN	55	7.5	18	70	110.6	50	50	M8×1.25×12	10	80	15	47.5	15	M6×0.75	15	11
LA35BN					144.6		72			114	21					
LA45AN	70	10	20.5	86	141.4	60	60	M10×1.5×16	13	105	22.5	60	17	Rc1/8	20	13
LA45BN					173.4		80			137	28.5					
LA55AN	80	12	23.5	100	165.4	75	75	M12×1.75×18	12.5	126	25.5	68	18	Rc1/8	21	13
LA55BN					203.4		95			164	34.5					
LA65AN	90	14	31.5	126	196.2	76	70	M16×2×19	25	147	38.5	76	22	Rc1/8	19	13
LA65BN					256.2		120			207	43.5					

Model No.	Rail Width W_1	Rail Height H_1	Rail Pitch F	Rail Mounting bolt hole d×D×h	Rail B_3	Rail G (recommended)	Rail Max. length L_{0max}	Basic load rating Dynamic C (N[kgf])	Basic load rating Static C_0 (N[kgf])	Static moment M_{RO} (N · m[kgf · m])	Static moment M_{PO} (N · m[kgf · m])	Static moment M_{YO} (N · m[kgf · m])	Ball dia. D_W	Weight Ball slide (kg)	Weight Rail (kg/m)
LA25AN	23	22	60	7×11×9	11.5	20	3960	30000	50000	290	410	410	3.968	0.6	3.7
LA25BN								40500	77000	445	935	935		0.9	
LA30AN	28	28	80	9×14×12	14	20	4000	47000	77500	535	820	820	4.762	0.9	5.8
LA30BN								58000	105000	725	1470	1470		1.3	
LA35AN	34	30.8	80	9×14×12	17	20	4000	61500	98000	845	1130	1130	5.556	1.5	7.7
LA35BN								80500	143000	1240	2330	2330		2.1	
LA45AN	45	36	105	14×20×17	22.5	22.5	3990	91000	148000	1840	2210	2210	6.350	3.0	12.0
LA45BN								111000	197000	2460	3850	3850		3.9	
LA55AN	53	43.2	120	16×23×20	26.5	30	3960	139000	215000	3150	3800	3800	7.937	4.7	17.2
LA55BN								172000	292000	4250	6800	6800		6.1	
LA65AN	63	55	150	18×26×22	31.5	35	3900	260000	420000	7300	9050	9050	10.318	7.7	25.9
LA65BN								340000	615000	10700	18700	18700		10.8	

LA Series does not have a ball retainer. Be aware that balls fall out when the ball slider is withdrawn from the rail.

The basic dynamic load rating is a load that furnishes 50 km rating fatigue life; it is a vertical and constant load to the ball slide mounting surface.
When converting the basic dynamic load rating C to the dynamic load rating C_{100} for 100 km rating fatigue life, divide the C by 1.26

www.bergab.ru Берг АБ bergab@ya.ru Тел. (495)-228-06-21, факс (495) 223-3071

www.bergab.ru Берг АБ bergab@ya.ru Тел. (495)-228-06-21, факс (495) 223-3071

LA-EL (High load type)
LA-GL (Super high load type)

LA 35 0840 EL C 2 – P6 3 –Ⅱ**

- **Series**
- **Size**
- **Rail length (mm)**
- **Ball slide shape code**
- **Material/surface treatment code (See Page A27)**
- **Number of ball slides per rail**
- *** Design serial number**
- **Accuracy code (See table Ⅰ-3·1 and Ⅰ-4·2)**
- **Preload code 3: Z3 4: Z4(See page A23)**
- ***-Ⅱ: Use two rails as a set. Default: One rail use**

* Please note that we assign the design number, and omit the last code (Ⅱ) that indicates a use of two rails as a set to finalize the reference number as product identification.

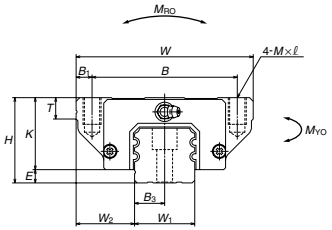

EL type

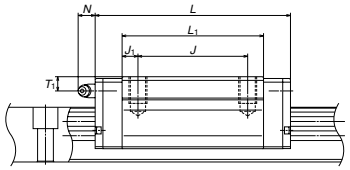

GL type

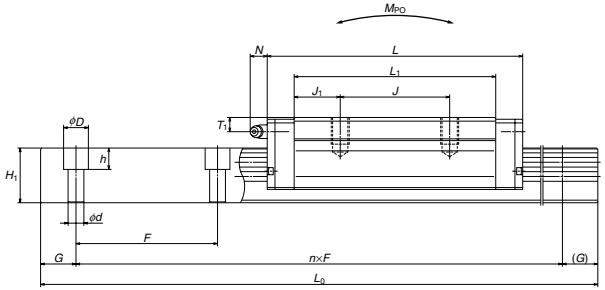

Table. Ⅰ-5•17

Unit: mm

Model No.	Assembly Height H	Assembly E	Assembly W_2	Ball slide Width W	Ball slide Length L	Mounting hole B	Mounting hole J	Mounting hole M×pitch×ℓ	B_1	L_1	J_1	K	T	Grease fitting Hole size	Grease fitting T_1	Grease fitting N
LA25EL	36	5.5	23.5	70	79.8	57	45	M8×1.25×12	6.5	58	6.5	30.5	11	M6×0.75	6	11
LA25GL					107.8					86	20.5					
LA30EL	42	7.5	31	90	100.2	72	52	M10×1.5×16	9	72	10	34.5	11	M6×0.75	6.5	11
LA30GL					126.2					98	23					
LA35EL	48	7.5	33	100	110.6	82	62	M10×1.5×15	9	80	9	40.5	12	M6×0.75	8	11
LA35GL					144.6					114	26					
LA45EL	60	10	37.5	120	141.4	100	80	M12×1.75×18	10	105	12.5	50	13	Rc1/8	10	13
LA45GL					173.4					137	28.5					
LA55EL	70	12	43.5	140	165.4	116	95	M14×2×21	12	126	15.5	58	15	Rc1/8	11	13
LA55GL					203.4					164	34.5					
LA65EL	90	14	53.5	170	196.2	142	110	M16×2×24	14	147	18.5	76	22	Rc1/8	19	13
LA65GL					256.2					207	48.5					

Model No.	Rail Width W_1	Rail Height H_1	Rail Pitch F	Rail Mounting bolt hole d×D×h	Rail B_3	Rail G (recommended)	Rail Max. length L_{0max}	Basic load rating Dynamic C (N)	Basic load rating Static C_0 (N)	Static moment M_{RO} (N · m)	Static moment M_{PO} (N · m)	Static moment M_{YO} (N · m)	Ball dia. D_W	Weight Ball slide (kg)	Weight Rail (kg/m)
LA25EL	23	22	60	7×11×9	11.5	20	3960	30000	50000	290	410	410	3.968	0.8	3.7
LA25GL								40500	77000	445	935	935		1.1	
LA30EL	28	28	80	9×14×12	14	20	4000	47000	77500	535	820	820	4.762	1.3	5.8
LA30GL								58000	105000	725	1470	1470		1.8	
LA35EL	34	30.8	80	9×14×12	17	20	4000	61500	98000	845	1130	1130	5.556	1.9	7.7
LA35GL								80500	143000	1240	2330	2330		2.6	
LA45EL	45	36	105	14×20×17	22.5	22.5	3990	91000	148000	1840	2210	2210	6.350	3.3	12.0
LA45GL								111000	197000	2460	3850	3850		4.3	
LA55EL	53	43.2	120	16×23×20	26.5	30	3960	139000	215000	3150	3800	3800	7.937	5.5	17.2
LA55GL								172000	292000	4250	6800	6800		7.2	
LA65EL	63	55	150	18×26×22	31.5	35	3900	260000	420000	7300	9050	9050	10.318	11.0	25.9
LA65GL								340000	615000	10700	18700	18700		15.5	

LA Series does not have a ball retainer. Be aware that balls fall out when the ball slider is withdrawn from the rail.

The basic dynamic load rating is a load that furnishes 50 km rating fatigue life; it is a vertical and constant load to the ball slide mounting surface.
When converting the basic dynamic load rating C to the dynamic load rating C_{100} for 100 km rating fatigue life, divide the C by 1.26

www.bergab.ru Берг АБ bergab@ya.ru Тел. (495)-228-06-21, факс (495) 223-3071

www.bergab.ru Берг АБ bergab@ya.ru Тел. (495)-228-06-21, факс (495) 223-3071

LA-FL (High load type)
LA-HL (Super high load type)

LA 35 0840 FL C 2 – ** **P6 3 –Ⅱ**

- **Series**
- **Size**
- **Rail length (mm)**
- **Ball slide shape code**
- **Material/surface treatment code (See Page A27)**
- **Number of ball slides per rail**
- *** Design serial number**
- **Accuracy code (See table Ⅰ-3·1 and Ⅰ-4·2)**
- **Preload code 3: Z3 4: Z4(See page A23)**
- ***-Ⅱ: Use two rails as a set. Default: One rail use**

* Please note that we assign the design number, and omit the last code (Ⅱ) that indicates a use of two rails as a set to finalize the reference number as product identification.

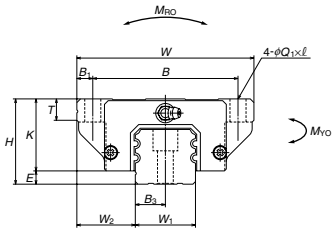

FL type

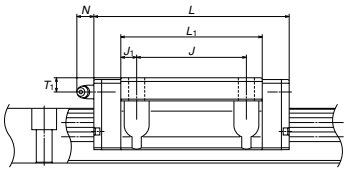

HL type

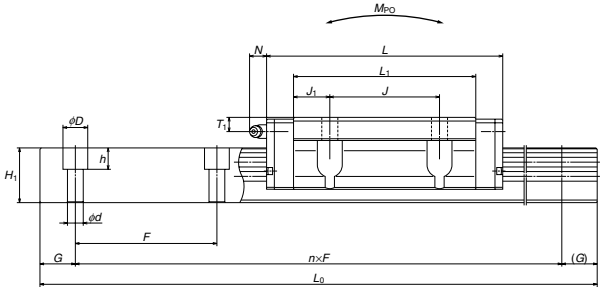

Table. Ⅰ-5•18

Unit: mm

Model No.	Assembly Height H	Assembly E	Assembly W_2	Ball slide Width W	Ball slide Length L	Mounting hole B	Mounting hole J	Mounting hole $Q_1 \times \ell$	B_1	L_1	J_1	K	T	Grease fitting Hole size	Grease fitting T_1	Grease fitting N
LA25FL	36	5.5	23.5	70	79.8	57	45	7×10	6.5	58	6.5	30.5	11	M6×0.75	6	11
LA25HL					107.8					86	20.5					
LA30FL	42	7.5	31	90	100.2	72	52	9×12	9	72	10	34.5	11	M6×0.75	6.5	11
LA30HL					126.2					98	23					
LA35FL	48	7.5	33	100	110.6	82	62	9×13	9	80	9	40.5	12	M6×0.75	8	11
LA35HL					144.6					114	26					
LA45FL	60	10	37.5	120	141.4	100	80	11×15	10	105	12.5	50	13	Rc1/8	10	13
LA45HL					173.4					137	28.5					
LA55FL	70	12	43.5	140	165.4	116	95	14×18	12	126	15.5	58	15	Rc1/8	11	13
LA55HL					203.4					164	34.5					
LA65FL	90	14	53.5	170	196.2	142	110	16×23	14	147	18.5	76	22	Rc1/8	19	13
LA65HL					256.2					207	48.5					

Model No.	Rail Width W_1	Rail Height H_1	Rail Pitch F	Rail Mounting bolt hole $d \times D \times h$	Rail B_3	Rail G (recommended)	Rail Max. length L_{0max}	Basic load rating Dynamic C (N)	Basic load rating Static C_0 (N)	Static moment M_{RO} (N · m)	Static moment M_{PO} (N · m)	Static moment M_{YO} (N · m)	Ball dia. D_W	Weight Ball slide (kg)	Weight Rail (kg/m)
LA25FL	23	22	60	7×11×9	11.5	20	3960	30000	50000	290	410	410	3.968	0.8	3.7
LA25HL								40500	77000	445	935	935		11	
LA30FL	28	28	80	9×14×12	14	20	4000	47000	77500	535	820	820	4.762	1.3	5.8
LA30HL								58000	105000	725	1470	1470		1.8	
LA35FL	34	30.8	80	9×14×12	17	20	4000	61500	98000	845	1130	1130	5.556	1.9	7.7
LA35HL								80500	143000	1240	2330	2330		2.6	
LA45FL	45	36	105	14×20×17	22.5	22.5	3990	91000	148000	1840	2210	2210	6.350	3.3	12.0
LA45HL								111000	197000	2460	3850	3850		4.3	
LA55FL	53	43.2	120	16×23×20	26.5	30	3960	139000	215000	3150	3800	3800	7.937	5.5	17.2
LA55HL								172000	292000	4250	6800	6800		7.2	
LA65FL	63	55	150	18×26×22	31.5	35	3900	260000	420000	7300	9050	9050	10.318	11.0	25.9
LA65HL								340000	615000	10700	18700	18700		15.5	

LA Series does not have a ball retainer. Be aware that balls fall out when the ball slider is withdrawn from the rail.

The basic dynamic load rating is a load that furnishes 50 km rating fatigue life; it is a vertical and constant load to the ball slide mounting surface.
When converting the basic dynamic load rating C to the dynamic load rating C_{100} for 100 km rating fatigue life, divide the C by 1.26

www.bergab.ru Берг АБ bergab@ya.ru Тел. (495)-228-06-21, факс (495) 223-3071

www.bergab.ru Берг АБ bergab@ya.ru Тел. (495)-228-06-21, факс (495) 223-3071

A-I-5.4 LY Series

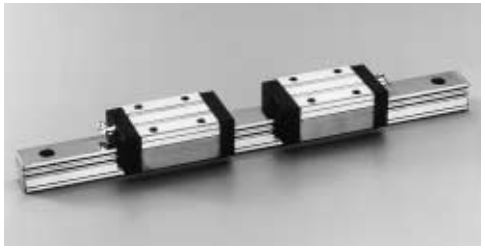

(1) Equal load carrying capacity in four directions.

Contact angle is set at 45 degrees. Therefore, rigidity and load carrying capacity are equal in vertical and lateral directions.

(2) High rigidity

All four grooves are of gothic-arch. The center of the top and bottom grooves are offset.

It is designed in such way that the contact lines of balls in top and bottom grooves cross outside as shown in Fig.I-5•14 (DB combination). This increases moment rigidity.

With preload higher than medium level (Z3, Z4), ball contact is made at four points as shown in Fig.I-5•15. The increase in contact points enhances both rigidity and load carrying capacity.

(3) High resistance against shock load

Four rows support the load when a high load, such as shock, is applied.

(4) Absorbs vibration (higher than medium preload).

The contact point becomes four under the preload which is higher than medium level (Z3, Z4). This slightly increases the friction coefficient, and enhances vibration-absorbing capacity.

(5) Detects abnormal level of error in installation.

When the error in installation is too large, unlike other series, the friction to the four-groove gothic-arch suddenly becomes large. Thus the abnormality is detected and a warning is signaled.

(6) Easy to handle, and designed with safety in mind.

Balls are retained in the retainer and do not fall out when a ball slide is withdrawn from the rail.

(7) High accuracy

As shown in Fig. I-5•16, fixing the master rollers to the groove is easy thanks to the gothic-arch groove. This makes groove measuring accurate.

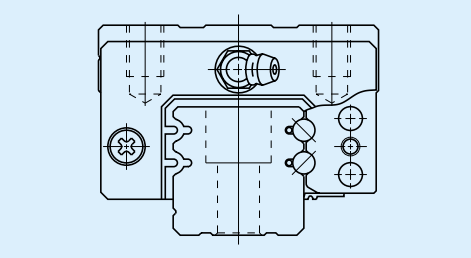

Fig. I-5•13 LY Series

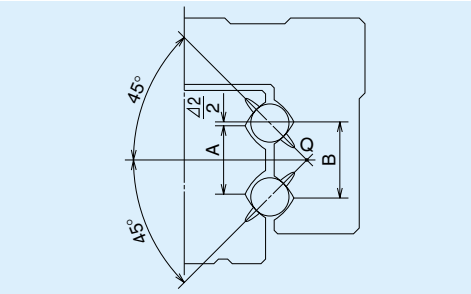

Fig. I-5•14 High rigidity design (DB combination)

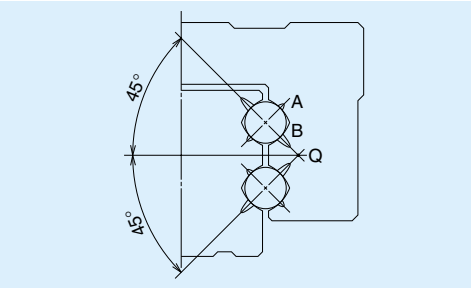

Fig. I-5•15 Ball contact under high preload

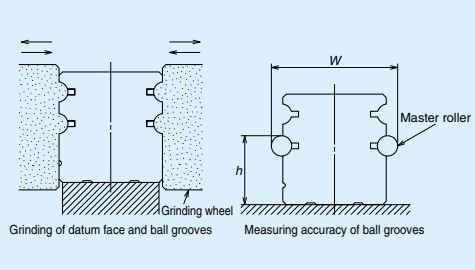

Fig. I-5•16 Rail grinding and measuring

www.bergab.ru Берг АБ bergab@ya.ru Тел. (495)-228-06-21, факс (495) 223-3071

www.bergab.ru Берг АБ bergab@ya.ru Тел. (495)-228-06-21, факс (495) 223-3071

Dimensions of LY Series (Preloaded assembly)

LY-AL (High load type)
LY-BL (Super high load type)

LY 35 0840 AL C 2 – P6 0 –Ⅱ**

- **Series**
- **Size**
- **Rail length (mm)**
- **Ball slide shape code**
- **Material/surface treatment code (See Page A27)**
- **Number of ball slides per rail**
- *** Design serial number**
- **Accuracy code (See table Ⅰ-3·1 and Ⅰ-4·2)**
- **Preload code 0: Z0, 1: Z1, 2: Z2, 3: Z3, 4: Z4(See page A23)**
- ***-Ⅱ: Use two rails as a set. Default: One rail use**

* Please note that we assign the design number, and omit the last code (Ⅱ) that indicates a use of two rails as a set to finalize the reference number as product identification.

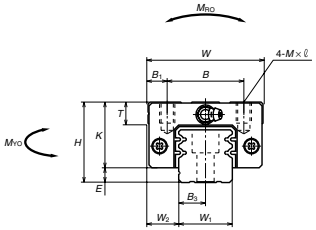

BL type

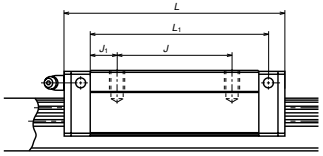

AL type

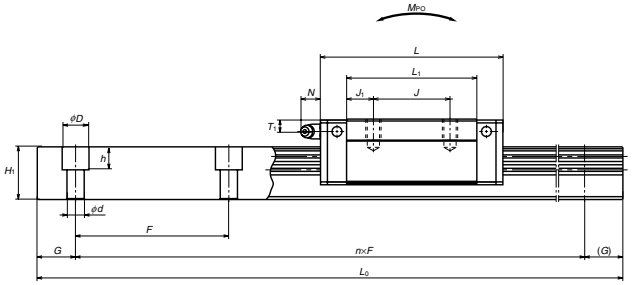

Table. Ⅰ-5•19

Unit: mm

Model No.	Assembly: Height H	Assembly: E	Assembly: W_2	Ball slide: Width W	Ball slide: Length L	Mounting hole: B	Mounting hole: J	Mounting hole: M×pitch×ℓ	B_1	L_1	J_1	K	T	Grease fitting: Hole size	Grease fitting: T_1	Grease fitting: N
LY15AL	24	4.5	9.5	34	55	26	26	M4×0.7×6	4	39	6.5	19.5	10	ϕ3	5	3
LY20AL	30	7	12	44	69.4	32	36	M5×0.8×8	6	50	7	23	12	ϕ3	5	3
LY20BL					85.4		50			66	8					
LY25AL	36	5.5	12.5	48	80.8	35	35	M6×1×10	6.5	58	11.5	30.5	10	M6×0.75	6	11
LY25BL					102.8		50			80	15					
LY30AL	42	7.5	16	60	95.2	40	40	M8×1.25×11	10	68	14	34.5	11	M6×0.75	6.5	11
LY30BL					115.2		60			88						
LY35AL	48	7.5	18	70	110.4	50	50	M8×1.25×12	10	80	15	40.5	12	M6×0.75	8	11
LY35BL					133.4		72			103	15.5					
LY45AL	60	10	20.5	86	137	60	60	M10×1.5×16	13	102	21	50	13	Rc1/8	10	13
LY45BL					169		80			134	27					
LY55AL	70	13	23.5	100	160	75	75	M12×1.75×18	12.5	120	22.5	57	15	Rc1/8	11	13
LY55BL					200		95			160	32.5					

Model No.	Rail: Width W_1	Rail: Height H_1	Rail: Pitch F	Rail: Mounting bolt hole d×D×h	Rail: B_3	Rail: G (recommended)	Rail: Max. length L_{0max}	Basic load rating: Dynamic C (N)	Basic load rating: Static C_0 (N)	Static moment: M_{RO} (N · m)	Static moment: M_{PO} (N · m)	Static moment: M_{YO} (N · m)	Ball dia. D_W	Weight: Ball slide (kg)	Weight: Rail (kg/m)
LY15AL	15	14	60	4.5×7.5×5.3	7.5	20	2000	7100	9400	71	50	50	3.175	0.16	1.6
LY20AL	20	19	60	6×9.5×8.5	10	20	2000	11500	14700	147	96	96	3.968	0.3	2.9
LY20BL								14500	20600	206	181	181		0.41	
LY25AL	23	22.5	60	7×11×9	11.5	20	2200	22400	38000	355	315	315	3.968	0.49	3.9
LY25BL								29100	56000	515	650	650		0.66	
LY30AL	28	27.5	80	9×14×12	14	20	3000	33000	55000	615	545	545	4.762	0.82	5.8
LY30BL								39500	72000	805	910	910		1.0	
LY35AL	34	31	80	9×14×12	17	20	3000	46000	75000	1020	865	865	5.556	1.3	7.9
LY35BL								55000	98000	1340	1440	1440		1.6	
LY45AL	45	37.5	105	14×20×17	22.5	22.5	3000	67000	113000	2080	1690	1690	6.350	2.5	12.7
LY45BL								82500	151000	2770	2940	2940		3.2	
LY55AL	53	45	120	16×23×20	26.5	30	3000	103000	165000	3550	2900	2900	7.937	3.9	17.9
LY55BL								128000	224000	4800	5200	5200		5.1	

LY15 and 20 have a single row of balls on each right and left side.

The basic dynamic load rating is a load that furnishes 50 km rating fatigue life; it is a vertical and constant load to the ball slide mounting surface.
To convert the basic dynamic load rating into that of 100 km rating fatigue life, divide the C by 1.26

www.bergab.ru Берг АБ bergab@ya.ru Тел. (495)-228-06-21, факс (495) 223-3071

www.bergab.ru Берг АБ bergab@ya.ru Тел. (495)-228-06-21, факс (495) 223-3071

LY-AN (High load type)
LY-BN (Super high load type)

LY 35 0840 AN C 2 – P6 0 –Ⅱ**

- **Series**
- **Size**
- **Rail length (mm)**
- **Ball slide shape code**
- **Material/surface treatment code (See Page A27)**
- **Number of ball slides per rail**
- *** Design serial number**
- **Accuracy code (See table Ⅰ-3·1 and Ⅰ-4·2)**
- **Preload code 0: Z0, 1: Z1, 2: Z2, 3: Z3, 4: Z4(See page A23)**
- ***-Ⅱ: Use two rails as a set. Default: One rail use**

* Please note that we assign the design number, and omit the last code (Ⅱ) that indicates a use of two rails as a set to finalize the reference number as product identification.

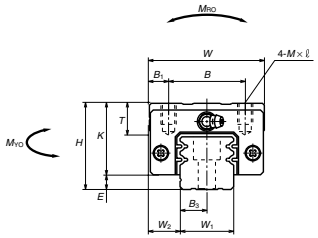

BN type

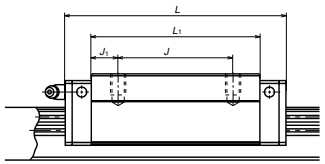

AN type

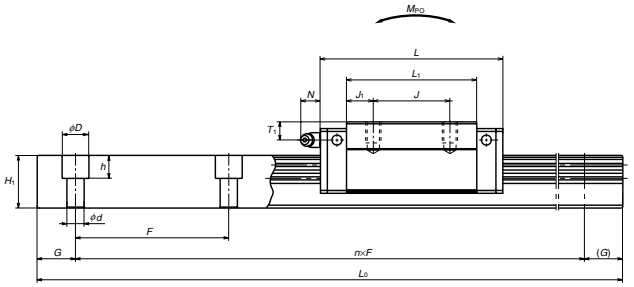

Table. Ⅰ-5•20

Unit: mm

Model No.	Assembly: Height H	E	W_2	Ball slide: Width W	Length L	Mounting hole: B	J	M×pitch×ℓ	B_1	L_1	J_1	K	T	Grease fitting: Hole size	T_1	N
LY15AN	28	4.5	9.5	34	55	26	26	M4×0.7×6	4	39	6.5	23.5	11	ϕ3	9	3
LY25AN	40	5.5	12.5	48	80.8	35	35	M6×1×10	6.5	58	11.5	34.5	12	M6×0.75	10	11
LY25BN					102.8		50			80	15					
LY30AN	45	7.5	16	60	95.2	40	40	M8×1.25×11	10	68	14	37.5	14	M6×0.75	9.5	11
LY30BN					115.2		60			88						
LY35AN	55	7.5	18	70	110.4	50	50	M8×1.25×12	10	80	15	47.5	15	M6×0.75	15	11
LY35BN					133.4		72			103	15.5					
LY45AN	70	10	20.5	86	137	60	60	M10×1.5×16	13	102	21	60	17	Rc1/8	20	13
LY45BN					169		80			134	27					
LY55AN	80	13	23.5	100	160	75	75	M12×1.75×18	12.5	120	22.5	67	18	Rc1/8	21	13
LY55BN					200		95			160	32.5					
LY65AN	90	14	31.5	126	184.6	76	70	M16×2×23	25	137	33.5	76	23	Rc1/8	19	13
LY65BN					244.6		120			197	38.5					

Model No.	Rail: Width W_1	Height H_1	Pitch F	Mounting bolt hole d×D×h	B_3	G (recommended)	Max. length L_{0max}	Basic load rating: Dynamic C (N)	Static C_0 (N)	Static moment M_{RO} (N · m)	M_{PO} (N · m)	M_{YO} (N · m)	Ball dia. D_W	Weight: Ball slide (kg)	Rail (kg/m)
LY15AN	15	14	60	4.5×7.5×5.3	7.5	20	2000	7100	9400	71	50	50	3.175	0.2	1.6
LY25AN	23	22.5	60	7×11×9	11.5	20	2200	22400	38000	355	315	315	3.968	0.58	3.9
LY25BN								29100	56000	515	650	650		0.78	
LY30AN	28	27.5	80	9×14×12	14	20	3000	33000	55000	615	545	545	4.762	0.91	5.8
LY30BN								39500	72000	805	910	910		1.1	
LY35AN	34	31	80	9×14×12	17	20	3000	46000	75000	1020	865	865	5.556	1.6	7.9
LY35BN								55000	98000	1340	1440	1440		2.0	
LY45AN	45	37.5	105	14×20×17	22.5	22.5	3000	67000	113000	2080	1690	1690	6.350	3.2	12.7
LY45BN								82500	151000	2770	2940	2940		4.1	
LY55AN	53	45	120	16×23×20	26.5	30	3000	103000	165000	3550	2900	2900	7.937	4.8	17.9
LY55BN								128000	224000	4800	5200	5200		6.3	
LY65AN	63	53	150	18×26×22	31.5	35	3000	212000	340000	8600	6800	6800	10.318	8.0	25.1
LY65BN								282000	515000	12900	14800	14800		11.2	

LY15 has a single row of balls on each right and left side.

Remarks: There are no LY20AN or LY20BN. LY20AL is equivalent to LY20AN. LY20BL is equivalent to LY20BN. (See Page A67)
Please finish the mounting surface of the ball slide mounting surface.
When calculating the basic dynamic load rating, divide the C by 1.26 when calculating fatigue life.

www.bergab.ru Берг АБ bergab@ya.ru Тел. (495)-228-06-21, факс (495) 223-3071

www.bergab.ru Берг АБ bergab@ya.ru Тел. (495)-228-06-21, факс (495) 223-3071

LY-EL (High load type)
LY-GL (Super high load type)
LY-TL (High-load type, small mounting tap hole)

LY 35 0840 EL C 2 – P6 0 –Ⅱ**

- Series
- Size
- Rail length (mm)
- Ball slide shape code
- Material/surface treatment code (See Page A27)
- Number of ball slides per rail
- * Design serial number
- Accuracy code (See table Ⅰ-3·1 and Ⅰ-4·2)
- Preload code 0: Z0, 1: Z1, 2: Z2, 3: Z3, 4: Z4(See page A23)
- *-Ⅱ: Use two rails as a set. Default: One rail use

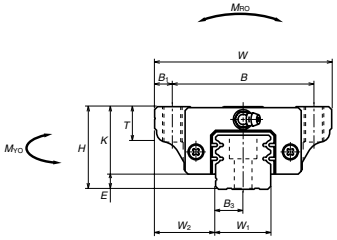

GL type

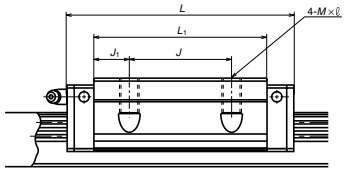

EL, TL type

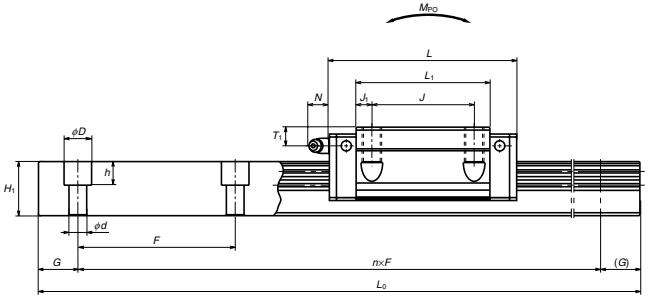

* Please note that we assign the design number, and omit the last code (Ⅱ) that indicates a use of two rails as a set to finalize the reference number as product identification.

Table. Ⅰ-5·21

Unit: mm

Model No.	Assembly Height H	E	W_2	Ball slide Width W	Length L	Mounting hole B	J	M×pitch×ℓ	B_1	L_1	J_1	K	T	Grease fitting Hole size	T_1	N
LY15EL	24	4.5	16	47	55	38	30	M5×0.8×8	4.5	39	4.5	19.5	8	φ3	5	3
LY20EL	30	7	21.5	63	69.4	53	40	M6×1×10	5	50	5	23	10	φ3	5	3
LY20GL					85.4					66	13					
LY25EL	36	5.5	23.5	70	80.8	57	45	M8×1.25×16	6.5	58	6.5	30.5	11	M6×0.75	6	11
LY25GL					102.8					80	17.5					
LY30EL					95.2			M10×1.5×18		68	8					
LY30GL	42	7.5	31	90	115.2	72	52	M10×1.5×18	9	88	18	34.5	11	M6×0.75	6.5	11
LY30TL					95.2			M8×1.25×18		68	8					
LY35EL	48	7.5	33	100	110.4	82	62	M10×1.5×20	9	80	9	40.5	12	M6×0.75	8	11
LY35GL					133.4					103	20.5					
LY45EL	60	10	37.5	120	137	100	80	M12×1.75×24	10	102	11	50	13	Rc1/8	10	13
LY45GL					169					134	27					
LY55EL	70	13	43.5	140	160	116	95	M14×2×28	12	120	12.5	57	14	Rc1/8	11	13
LY55GL					200					160	32.5					
LY65EL	90	14	53.5	170	184.6	142	110	M16×2×37	14	137	13.5	76	23	Rc1/8	19	13
LY65GL					244.6					197	43.5					

Model No.	Rail Width W_1	Height H_1	Pitch F	Mounting bolt hole d×D×h	B_3	G (recommended)	Max. length L_{0max}	Basic load rating Dynamic C (N)	Static C_0 (N)	Static moment M_{RO} (N · m)	M_{PO} (N · m)	M_{YO} (N · m)	Ball dia. D_W	Weight Ball slide (kg)	Rail (kg/m)
LY15EL	15	14	60	4.5×7.5×5.3	7.5	20	2000	7100	9400	71	50	50	3.175	0.2	1.6
LY20EL	20	19	60	6×9.5×8.5	10	20	2000	11500	14700	147	96	96	3.968	0.37	2.9
LY20GL								14500	20600	206	181	181		0.51	
LY25EL	23	22.5	60	7×11×9	11.5	20	2200	22400	38000	355	315	315	3.968	0.66	3.9
LY25GL								29100	56000	515	650	650		0.83	
LY30EL								33000	55000	615	545	545		1.1	
LY30GL	28	27.5	80	9×14×12	14	20	3000	39500	72000	805	910	910	4.762	1.3	5.8
LY30TL								33000	55000	615	545	545		1.1	
LY35EL	34	31	80	9×14×12	17	20	3000	46000	75000	1020	865	865	5.556	1.7	7.9
LY35GL								55000	98000	1340	1440	1440		2.0	
LY45EL	45	37.5	105	14×20×17	22.5	22.5	3000	67000	113000	2080	1690	1690	6.350	3.2	12.7
LY45GL								82500	151000	2770	2940	2940		3.9	
LY55EL	53	45	120	16×23×20	26.5	30	3000	103000	165000	3550	2900	2900	7.937	4.9	17.9
LY55GL								128000	224000	4800	5200	5200		6.1	
LY65EL	63	53	150	18×26×22	31.5	35	3000	212000	340000	8600	6800	6800	10.318	9.3	25.1
LY65GL								282000	515000	12900	14800	14800		12.3	

LY15 and 20 have a single row of balls on each right and left side.

The basic dynamic load rating is a load that furnishes 50 km rating fatigue life; it is a vertical and constant load to the ball slide mounting surface. When converting the basic dynamic load rating for the dynamic load rating for 100 km rating fatigue life, divide the C by 1.26

www.bergab.ru Берг АБ bergab@ya.ru Тел. (495)-228-06-21, факс (495) 223-3071

www.bergab.ru Берг АБ bergab@ya.ru Тел. (495)-228-06-21, факс (495) 223-3071

LY-FL (High load type)
LY-HL (Super high load type)

LY 35 0840 FL C 2 – P6 0 –Ⅱ**

- **Series**
- **Size**
- **Rail length (mm)**
- **Ball slide shape code**
- **Material/surface treatment code (See Page A27)**
- **Number of ball slides per rail**
- *** Design serial number**
- **Accuracy code (See table Ⅰ-3·1 and Ⅰ-4·2)**
- **Preload code 0: Z0, 1: Z1, 2: Z2, 3: Z3, 4: Z4(See page A23)**
- ***-Ⅱ: Use two rails as a set. Default: One rail use**

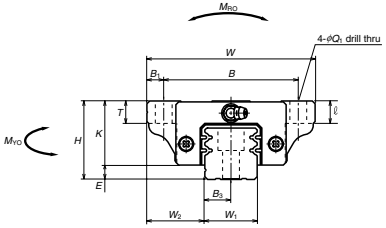

* Please note that we assign the design number, and omit the last code (Ⅱ) that indicates a use of two rails as a set to finalize the reference number as product identification.

HL type

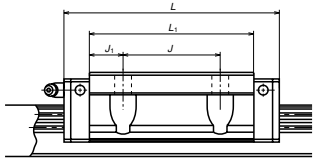

FL type

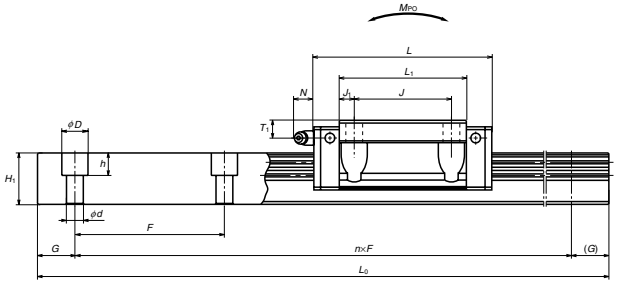

Table. Ⅰ-5•22

Unit: mm

Model No.	Assembly Height H	E	W_2	Ball slide Width W	Length L	Mounting hole B	J	Q_1×ℓ	B_1	L_1	J_1	K	T	Grease fitting Hole size	T_1	N
LY15FL	24	4.5	16	47	55	38	30	4.5×7	4.5	39	4.5	19.5	8	φ3	5	3
LY20FL	30	7	21.5	63	69.4	53	40	6×9	5	50	5	23	10	φ3	5	3
LY20HL					85.4					66	13					
LY25FL	36	5.5	23.5	70	80.8	57	45	7×10	6.5	58	6.5	30.5	11	M6×0.75	6	11
LY25HL					102.8					80	17.5					
LY30FL	42	7.5	31	90	95.2	72	52	9×12	9	68	8	34.5	11	M6×0.75	6.5	11
LY30HL					115.2					88	18					
LY35FL	48	7.5	33	100	110.4	82	62	9×13	9	80	9	40.5	12	M6×0.75	8	11
LY35HL					133.4					103	20.5					
LY45FL	60	10	37.5	120	137	100	80	11×15	10	102	11	50	13	Rc1/8	10	13
LY45HL					169					134	27					
LY55FL	70	13	43.5	140	160	116	95	14×17	12	120	12.5	57	14	Rc1/8	11	13
LY55HL					200					160	32.5					
LY65FL	90	14	53.5	170	184.6	142	110	16×23	14	137	13.5	76	23	Rc1/8	19	13
LY65HL					244.6					197	43.5					

Model No.	Rail Width W_1	Height H_1	Pitch F	Mounting bolt hole d×D×h	B_3	G (recommended)	Max. length L_{0max}	Basic load rating Dynamic C (N)	Static C_0 (N)	Static moment M_{RO} (N · m)	M_{PO} (N · m)	M_{YO} (N · m)	Ball dia. D_W	Weight Ball slide (kg)	Rail (kg/m)
LY15FL	15	14	60	4.5×7.5×5.3	7.5	20	2000	7100	9400	71	50	50	3.175	0.2	1.6
LY20FL	20	19	60	6×9.5×8.5	10	20	2000	11500	14700	147	96	96	3.968	0.37	2.9
LY20HL								14500	20600	206	181	181		0.51	
LY25FL	23	22.5	60	7×11×9	11.5	20	2200	22400	38000	355	315	315	3.968	0.66	3.9
LY25HL								29100	56000	515	650	650		0.83	
LY30FL	28	27.5	80	9×14×12	14	20	3000	33000	55000	615	545	545	4.762	1.1	5.8
LY30HL								39500	72000	805	910	910		1.3	
LY35FL	34	31	80	9×14×12	17	20	3000	46000	75000	1020	865	865	5.556	1.7	7.9
LY35HL								55000	98000	1340	1440	1440		2.0	
LY45FL	45	37.5	105	14×20×17	22.5	22.5	3000	67000	113000	2080	1690	1690	6.350	3.2	12.7
LY45HL								82500	151000	2770	2940	2940		3.9	
LY55FL	53	45	120	16×23×20	26.5	30	3000	103000	165000	3550	2900	2900	7.937	4.9	17.9
LY55HL								128000	224000	4800	5200	5200		6.1	
LY65FL	63	53	150	18×26×22	31.5	35	3000	212000	340000	8600	6800	6800	10.318	9.3	25.1
LY65HL								282000	515000	12900	14800	14800		12.3	

LY15 and 20 have a single row of balls on each right and left side.

The basic dynamic load rating is a load that furnishes 50 km rating fatigue life; it is a vertical and constant load to the ball slide mounting surface. When converting the basic dynamic load rating C to the dynamic load rating C_{100} for 100 km rating fatigue life, divide the C by 1.26

www.bergab.ru Берг АБ bergab@ya.ru Тел. (495)-228-06-21, факс (495) 223-3071

www.bergab.ru Берг АБ bergab@ya.ru Тел. (495)-228-06-21, факс (495) 223-3071

A-I-5.5 LW Series (Wide rail type)

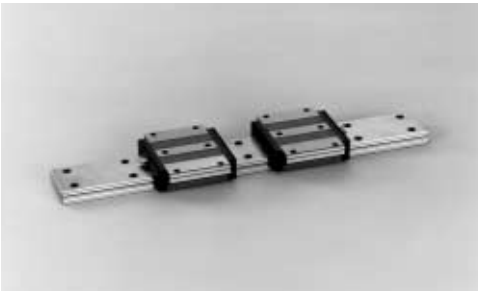

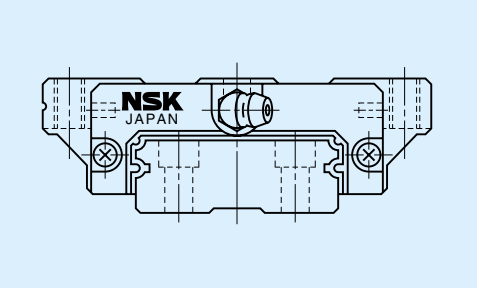

Fig. I-5•17 LW Series

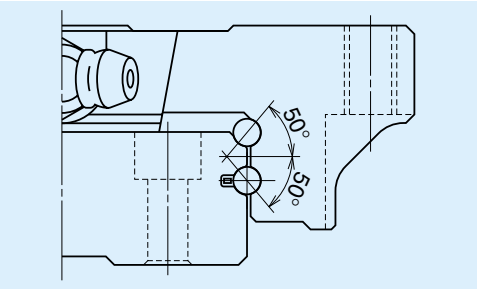

Fig. I-5•18 Balls in contact

(1) Ideal for use of single rail

Thanks to the wide rail, rigidity and load carrying capacity are high against moment load from rolling direction. This makes LW linear guides ideal in use of single rail as the guide way bearing.

(2) Large load carrying capacity against vertical direction

Contact angle is set at 50 degrees. This enhances load carrying capacity from vertical direction as well as rigidity.

(3) High resistance to impact load

Same as the LH and LS series, the offset gothic-arch grooves support a large load, such as an impact, by four rows.

(4) High accuracy

Fixing master rollers is easy thanks to the gothic-arch groove. This makes easy and accurate measuring of ball grooves.

(5) Easy to handle, and designed with safety in mind.

Balls are retained in the retainer and do not fall out when a ball slide is withdrawn from the rail.

(6) Interchangeable series is available (short delivery time)

The series enables random matching of rails and ball slides (interchangeability) for prompt delivery.

www.bergab.ru Берг АБ bergab@ya.ru Тел. (495)-228-06-21, факс (495) 223-3071

www.bergab.ru Берг АБ bergab@ya.ru Тел. (495)-228-06-21, факс (495) 223-3071

Dimensions of LW Series (Preloaded assembly)

LW-EL (Wide rail type)

LW 35 1000 EL C 2 – P6 1 –Ⅱ**

- Series
- Size
- Rail length (mm)
- Ball slide shape code
- Material/surface treatment code (See Page A27)
- Number of ball slides per rail
- * Design serial number
- Accuracy code (See table Ⅰ-3·1 and Ⅰ-4·2)
- Preload code 0: Z0 / 1: Z1(See page A23)
- *-Ⅱ: Use two rails as a set. Default: One rail use

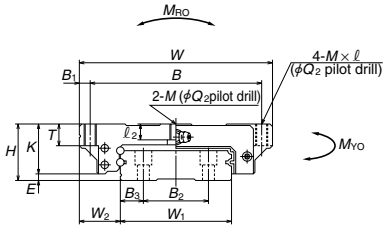

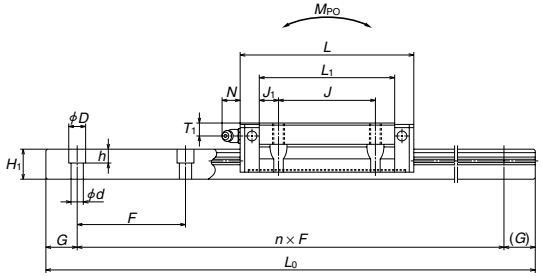

* Please note that we assign the design number, and omit the last code (Ⅱ) that indicates a use of two rails as a set to finalize the reference number as product identification.

Table. Ⅰ-5•23

Unit: mm

Model No.	Assembly Height H	Assembly E	Assembly W_2	Ball slide Width W	Ball slide Length L	Mounting hole B	Mounting hole J	Mounting hole M × pitch × ℓ	Mounting hole ℓ_2	Mounting hole Q_2	B_1	L_1	J_1	K	T	Grease fitting Hole size	Grease fitting T_1	Grease fitting N
LW17EL	17	2.5	13.5	60	51.4	53	26	M4×0.7×6	3.2	3.3	3.5	35	4.5	14.5	6	ϕ3	4	3
LW21EL	21	3	15.5	68	58.8	60	29	M5×0.8×8	3.7	4.4	4	41	6	18	8	M6×0.75	4.5	11
LW27EL	27	4	19	80	74	70	40	M6×1×10	6	5.3	5	56	8	23	10	M6×0.75	6	11
LW35EL	35	4	25.5	120	108	107	60	M8×1.25×14	9	6.8	6.5	84	12	31	14	M6×0.75	8	11
LW50EL	50	4.5	36	162	140.6	144	80	M10×1.5×18	14	8.6	9	108	14	45.5	18	Rc1/8	14	14

Model No.	Rail Width W_1	Rail Height H_1	Rail B_2	Rail Pitch F	Rail Mounting bolt hole d × D × h	Rail B_3	Rail G (recommended)	Rail Max. length L_{0max}	Basic load rating Dynamic C (N)	Basic load rating Static C_0 (N)	Static moment M_{RO} (N·m)	Static moment M_{PO} (N·m)	Static moment M_{YO} (N·m)	Ball dia. D_W	Weight Ball slide (kg)	Weight Rail (kg/m)
LW17EL	33	8.7	18	40	4.5×7.5×5.3	7.5	15	1000	5600	11300	135	44	37	2.381	0.2	2.1
LW21EL	37	10.5	22	50	4.5×7.5×5.3	7.5	15	1600	6450	13900	185	66	55	2.381	0.3	2.9
LW27EL	42	15	24	60	4.5×7.5×5.3	9	20	2000	12800	26900	400	171	143	3.175	0.5	4.7
LW35EL	69	19	40	80	7×11×9	14.5	20	2400	33000	66500	1690	645	545	4.762	1.5	9.6
LW50EL	90	24	60	80	9×14×12	15	20	3000	61500	117000	3900	1530	1280	6.350	4.0	15.8

The basic dynamic load rating is a load that furnishes 50 km rating fatigue life; it is a vertical and constant load to the ball slide mounting surface.
When converting the basic dynamic load rating C to the dynamic load rating C_{100} for 100 km rating fatigue life, divide the C by 1.26

www.bergab.ru Берг АБ bergab@ya.ru Тел. (495)-228-06-21, факс (495) 223-3071

www.bergab.ru Берг АБ bergab@ya.ru Тел. (495)-228-06-21, факс (495) 223-3071

Dimensions of LW Series (Interchangeable ball slide)

LAW-EL (Wide rail type)

LA W 17 EL Z – K

- **LA** — Interchangeable ball slide code
- **W** — Series
- **17** — Size
- **EL** — Ball slide shape code (See Table I-2•2)
- **Z** — Preload code
  - Default: Fine clearance
  - S: Slight preload
- **K** — Option code
  - -K: Equipped with standard NSK K1

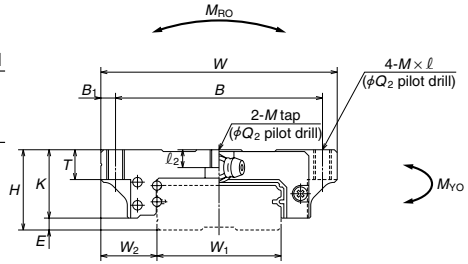

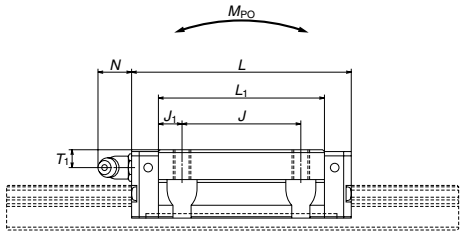

Table. I-5•24

Unit: mm

Model No.	Assembly Height H	Assembly E	Assembly W_2	Ball slide Width W	Ball slide Length L	Mounting hole B	Mounting hole J	Mounting hole M × pitch × ℓ	Mounting hole ℓ_2	Mounting hole Q_2	B_1	L_1	J_1	K	T
LAW17EL	17	2.5	13.5	60	51.4	53	26	M4×0.7×6	3.2	3.3	3.5	35	4.5	14.5	6
LAW21EL	21	3	15.5	68	58.8	60	29	M5×0.8×8	3.7	4.4	4	41	6	18	8
LAW27EL	27	4	19	80	74	70	40	M6×1×10	6	5.3	5	56	8	23	10
LAW35EL	35	4	25.5	120	108	107	60	M8×1.25×14	9	6.8	6.5	84	12	31	14
LAW50EL	50	4.5	36	162	140.6	144	80	M10×1.5×18	14	8.6	9	108	14	45.5	18

Model No.	Grease fitting Hole size	Grease fitting T_1	Grease fitting N	Basic load rating Dynamic C (N)	Basic load rating Static C_0 (N)	Static moment M_{RO} (N·m)	Static moment M_{PO} (N·m)	Static moment M_{YO} (N·m)	Ball dia. D_W	Weight Ball slide (kg)
LAW17EL	ϕ 3	4	3	5600	11300	135	44	37	2.381	0.2
LAW21EL	M6×0.75	4.5	11	6450	13900	185	66	55	2.381	0.3
LAW27EL	M6×0.75	6	11	12800	26900	400	171	143	3.175	0.5
LAW35EL	M6×0.75	8	11	33000	66500	1690	645	545	4.762	1.5
LAW50EL	Rc1/8	14	14	61500	117000	3900	1530	1280	6.350	4.0

The basic dynamic load rating is a load that furnishes 50 km rating fatigue life; it is a vertical and constant load to the ball slide mounting surface.
When converting the basic dynamic load rating C to the dynamic load rating C_{100} for 100 km rating fatigue life, divide the C by 1.26

www.bergab.ru Берг АБ bergab@ya.ru Тел. (495)-228-06-21, факс (495) 223-3071

www.bergab.ru Берг АБ bergab@ya.ru Тел. (495)-228-06-21, факс (495) 223-3071

Dimensions of LW Series (Interchangeable ball slide)

Standard stock

Example of reference number

Regular rail (non-butting rail)

L1 W 17 0950 L C N T PC Z**

- interchangeable rail code
- Series code
- Size code
- Rail length (mm)
- Shape code (See page 27)
- Material/surface treatment code (See Table I-4•1)
- *Butting rail specification
  N: Non-butting
  L: Butting specification
- *Design serial number
  T: Domestic standard
  K: Domestic semi-standard
  B: International user standard
- Accuracy code: PC
  (PC grade is only available)
- Preload code
  T: Fine clearance
  Z: Slight preload

* Please consult with NSK for butting rail specification.

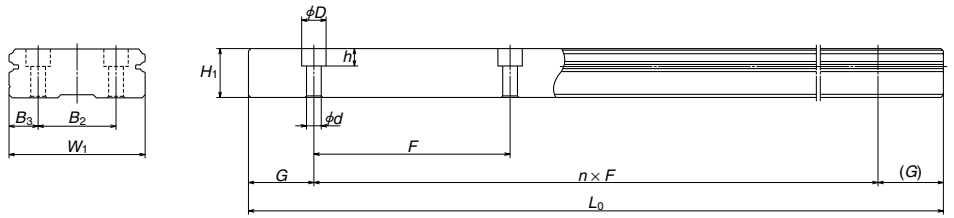

Table. I-5•25

Unit: mm

Model No.	Rail								
	Width W_1	Height H_1	B_2	Pitch F	Mounting bolt hole $d \times D \times h$	B_3	G (recommended)	Max. length L_{0max}	Weight (Kg / m)
L1W17	33	8.7	18	40	4.5×7.5×5.3	7.5	15	1000	2.1
L1W21	37	10.5	22	50	4.5×7.5×5.3	7.5	15	1600	2.9
L1W27	42	15	24	60	4.5×7.5×5.3	9	20	2000	4.7
L1W35	69	19	40	80	7×11×9	14.5	20	2400	9.6
L1W50	90	24	60	80	9×14×12	15	20	3000	15.8

A-I-5.6 LE Series (Miniature wide rail type)

(1) Ideal for use of single rail

LE Series linear guides are miniature, wide rail type. Thanks to the wide rail, load carrying capacity is high against moment load from rolling direction.

(2) Equal load carrying capacity in vertical and lateral directions

Contact angle is set at 45 degrees, equally dispersing the load from vertical and lateral directions. This also provides equal rigidity in the two directions.

(3) Guides are super-thin.

Super-thin guides owe their design to the single ball groove on right and left sides (gothic-arch).

(4) High accuracy

Fixing the master rollers is easy thanks to the gothic-arc groove. Groove measuring is accurate and easy.

(5) Stainless steel is standard.

Rails and ball slides are made of martensitic stainless steel.

(6) Ball retainer is available in some series.

Some series come with a ball retainer (ball slide model: AR and TR). Balls are retained in the retainer and do not fall out when a ball slide is withdrawn from the rail (interchangeable ball slides come with a ball retainer).

(7) Interchangeable series is available (short delivery time).

The series enables random matching of rails and ball slides (interchangeability) for prompt delivery.

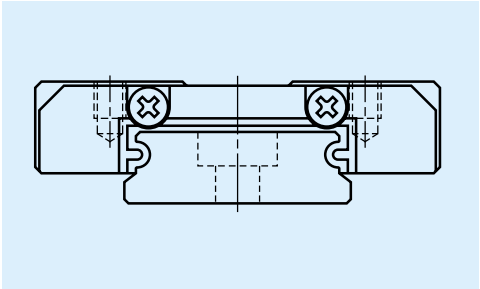

Table I-5•19 LE Series

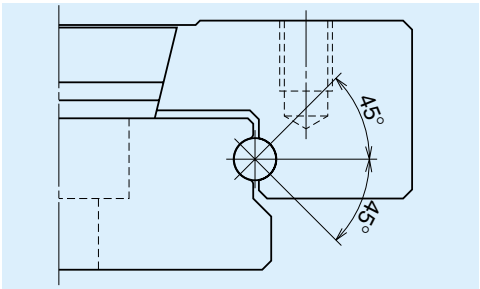

Table I-5•20 Balls in contact

www.bergab.ru Берг АБ bergab@ya.ru Тел. (495)-228-06-21, факс (495) 223-3071

www.bergab.ru Берг АБ bergab@ya.ru Тел. (495)-228-06-21, факс (495) 223-3071

Dimensions of LE Series

LE-AL (Wide rail, miniature)
LE-TL (Wide rail, miniature, large mounting tap hole)
LE-AR (Wide rail, miniature, with ball retainer)
LE-TR (Wide rail, miniature, large mounting tap hole, with ball retainer)

LE 15 0310 AL K 2 – ** PN 0 –Ⅱ**

- Series
- Size
- Rail length (mm)
- Ball slide shape code
- Material/surface treatment code (See Page A27)
- Number of ball slides per rail
- * Design serial number
- Accuracy code (See table Ⅰ-3·1 and Ⅰ-4·2)
- Preload code 0: Z0 / 1: Z1(See page A23)
- *-Ⅱ: Use two rails as a set. Default: One rail use

* Please note that we assign the design number, and omit the last code (Ⅱ) that indicates a use of two rails as a set to finalize the reference number as product identification.

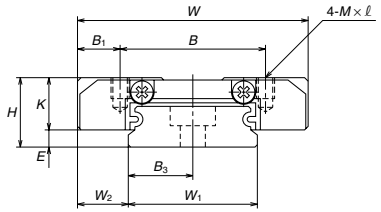

LE05, 07, 09, 12

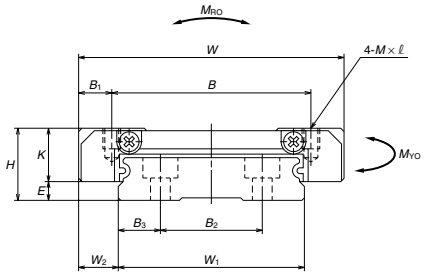

LE15

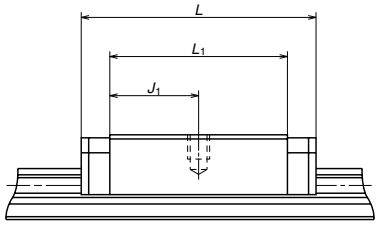

LE05

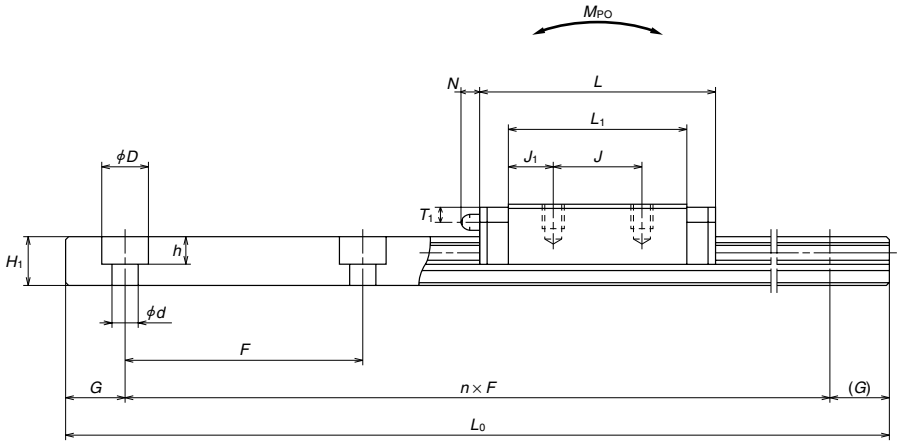

Table. Ⅰ-5•26

Unit: mm

Model No.	Assembly Height H	E	W_2	Ball slide Width W	Length L	Mounting hole B	J	M×pitch×ℓ	B_1	L_1	J_1	K	Grease fitting Hole size	T_1	N	Width W_1	Height H_1
LE05AL	6.5	1.4	3.5	17	24	13	—	M2.5×0.45×2	2	17	8.5	5.1	—	—	—	10	4
LE07TL	9	2	5.5	25	31	19	10	M3×0.5×3	3	21.2	5.6	7	—	—	—	14	5.2
LE09AL **LE09TL**	12	4	6	30	39	21	12	M2.6×0.45×3 M3×0.5×3	4.5	27.6	7.8	8	—	—	—	18	7.5
LE09AR **LE09TR**	12	4	6	30	39.8	21	12	M2.6×0.45×3 M3×0.5×3	4.5	27.6	7.8	8	—	—	—	18	7.5
LE12AL **LE12AR**	14	4	8	40	44 45	28	15	M3×0.5×4	6	31	8	10	—	—	—	24	8.5
LE15AL **LE15AR**	16	4	9	60	55 56.6	45	20	M4×0.7×4.5	7.5	38.4	9.2	12	— ϕ3	— 3.2	— 3	42	9.5

LE has only two mounting tap holes.

Rail B_2	Pitch F	Mounting bolt hole d×D×h	B_3	G (recommended)	Max. length L_{0max}	Basic load rating Dynamic C (N)	Static C_0 (N)	Static moment M_{RO} (N·m)	M_{PO} (N·m)	M_{YO} (N·m)	Ball dia. D_W	Weight Ball slide (g)	Rail (g/100mm)
—	20	3×5×1.6	5	7.5	150	725	1110	5.7	2.6	2.6	1.200	11	34
—	30	3.5×6×3.2	7	10	600	1580	2350	17	7.2	7.2	1.587	25	55
—	30	3.5×6×4.5	9	10	800	3000	4500	36	17	17	2.000	40	95
—	30	3.5×6×4.5	9	10	800	3000	4500	36	17	17	2.000	40	95
—	40	4.5×8×4.5	12	15	1000	4350	6350	71	29	29	2.381	75	140
23	40	4.5×8×4.5	9.5	15	1200	7600	10400	207	59	59	3.175	150	275

The basic dynamic load rating is a load that furnishes 50 km rating fatigue life; it is a vertical and constant load to the ball slide mounting surface.
When converting the basic dynamic load rating C to the dynamic load rating C_{100} for 100 km rating fatigue life, divide the C by 1.26
For fixing a rail of LE05AL, use cross-recessed pan head machine screw for precision instruments M2.5x045 (JCIS 10-70 : Japan Camera Industry Association, No.0, class 3).

www.bergab.ru Берг АБ bergab@ya.ru Тел. (495)-228-06-21, факс (495) 223-3071

www.bergab.ru Берг АБ bergab@ya.ru Тел. (495)-228-06-21, факс (495) 223-3071

LE-BL (High load type, wide rail, miniature)
LE-UL (High load type, wide rail, miniature, large mounting tap hole)

LE 15 0310 BL K 2 – PN 0 –Ⅱ**

- Series
- Size
- Rail length (mm)
- Ball slide shape code
- Material/surface treatment code (See Page A27)
- Number of ball slides per rail
- * Design serial number
- Accuracy code (See table Ⅰ-3·1 and Ⅰ-4·2)
- Preload code 0: Z0, 1: Z1(See page A23)
- *-Ⅱ: Use two rails as a set. Default: One rail use

* Please note that we assign the design number, and omit the last code (Ⅱ) that indicates a use of two rails as a set to finalize the reference number as product identification.

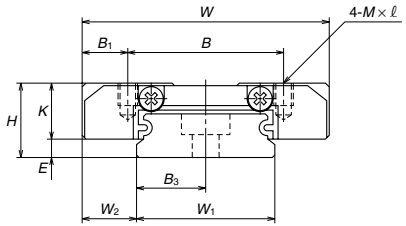

LE07, 09, 12

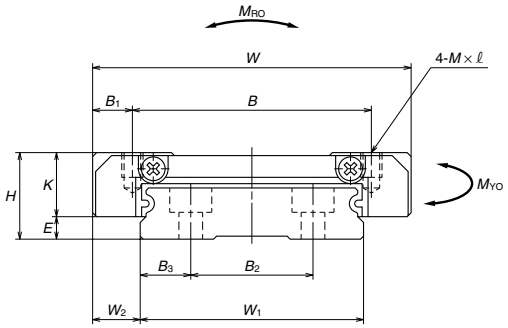

LE15

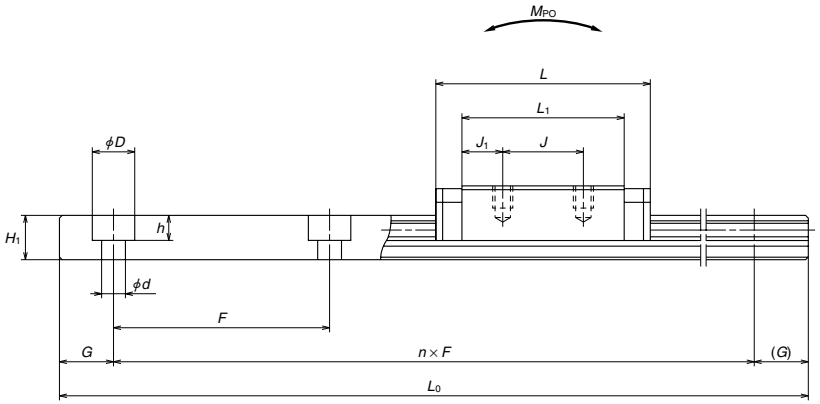

Table. Ⅰ-5·27

Unit: mm

Model No.	Assembly Height H	Assembly E	Assembly W_2	Ball slide Width W	Ball slide Length L	Mounting hole B	Mounting hole J	Mounting hole M×pitch×ℓ	B_1	L_1	J_1	K	Width W_1	Height H_1
LE07UL	9	2	5.5	25	42	19	19	M3×0.5×3	3	32.2	6.6	7	14	5.2
LE09BL **LE09UL**	12	4	6	30	50.4	23	24	M2.6×0.45×3 M3×0.5×3	3.5	39	7.5 7.5	8	18	7.5
LE12BL	14	4	8	40	59	28	28	M3×0.5×4	6	46	9	10	24	8.5
LE15BL	16	4	9	60	74.5	45	35	M4×0.7×4.5	7.5	57.8	11.4	12	42	9.5

Model No.	Rail B_2	Rail Pitch F	Rail Mounting bolt hole d×D×h	Rail B_3	Rail G (recommended)	Rail Max. length L_{0max}	Basic load rating Dynamic C (N)	Basic load rating Static C_0 (N)	Static moment M_{RO} (N·m)	Static moment M_{PO} (N·m)	Static moment M_{YO} (N·m)	Ball dia. D_W	Weight Ball slide (g)	Weight Rail (g/100mm)
LE07UL	—	30	3.5×6×3.2	7	10	600	2180	3700	26	17	17	1.587	39	55
LE09BL **LE09UL**	—	30	3.5×6×4.5	9	10	800	4000	6700	54	38	38	2.000	58	95
LE12BL	—	40	4.5×8×4.5	12	15	1000	5800	9550	106	63	63	2.381	115	140
LE15BL	23	40	4.5×8×4.5	9.5	15	1200	10300	16000	320	135	135	3.175	235	275

The basic dynamic load rating is a load that furnishes 50 km rating fatigue life; it is a vertical and constant load to the ball slide mounting surface.
When converting the basic dynamic load rating C to the dynamic load rating C_{100} for 100 km rating fatigue life, divide the C by 1.26

www.bergab.ru Берг АБ bergab@ya.ru Тел. (495)-228-06-21, факс (495) 223-3071

www.bergab.ru Берг АБ bergab@ya.ru Тел. (495)-228-06-21, факс (495) 223-3071

LE-CL (Medium load type, wide rail, miniature)
LE-SL (Medium load type, wide rail, miniature, large mounting tap hole)

LE 15 0310 CL K 2 – ** **PN 0 –Ⅱ**

- Series
- Size
- Rail length (mm)
- Ball slide shape code
- Material/surface treatment code (See Page A27)
- Number of ball slides per rail
- * Design serial number
- Accuracy code (See table Ⅰ-3·1 and Ⅰ-4·2)
- Preload code 0: Z0 1: Z1(See page A23)
- *-Ⅱ: Use two rails as a set. Default: One rail use

* Please note that we assign the design number, and omit the last code (Ⅱ) that indicates a use of two rails as a set to finalize the reference number as product identification.

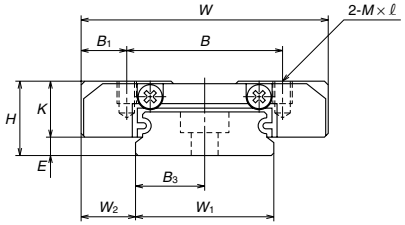

LE05, 07, 09, 12

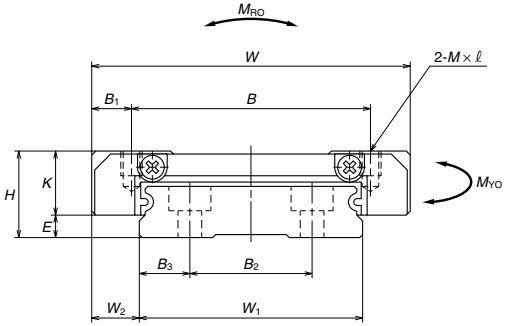

LE15

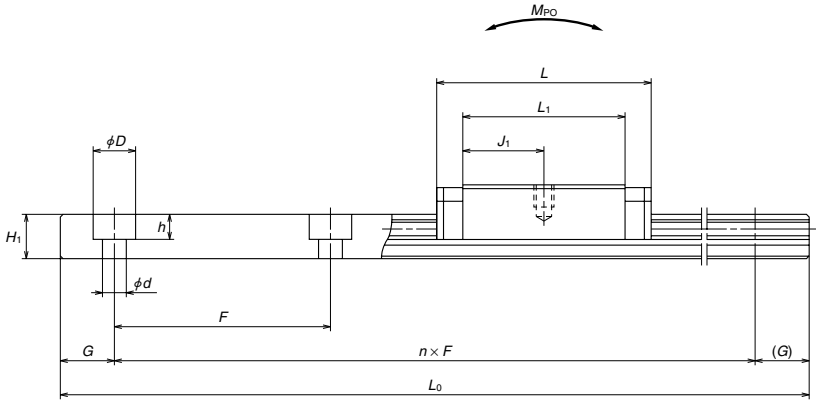

Table. Ⅰ-5•28

Unit: mm

Model No.	Assembly: Height H	E	W_2	Ball slide: Width W	Length L	Mounting hole: B	J	M×pitch×ℓ	B_1	L_1	J_1	K	Width W_1	Height H_1
LE05CL	6.5	1.4	3.5	17	20	13	—	M2.5×0.45×2	2	13	6.5	5.1	10	4
LE07SL	9	2	5.5	25	22.5	19	—	M3×0.5×3	3	12.6	6.3	7	14	5.2
LE09CL **LE09SL**	12	4	6	30	26.4	21	—	M2.6×0.45×3 M3×0.5×3	4.5	15	7.5	8	18	7.5
LE12CL	14	4	8	40	30.5	28	—	M3×0.5×4	6	17.5	8.75	10	24	8.5
LE15CL	16	4	9	60	41.4	45	—	M4×0.7×4.5	7.5	24.8	12.4	12	42	9.5

Model No.	Rail: B_2	Pitch F	Mounting bolt hole d×D×h	B_3	G (recommended)	Max. length L_{0max}	Basic load rating: Dynamic C (N)	Static C_0 (N)	Static moment M_{RO} (N·m)	M_{PO} (N·m)	M_{YO} (N·m)	Ball dia. D_W	Weight: Ball slide (g)	Rail (g/100mm)
LE05CL	—	20	3×5×1.6	5	7.5	150	595	835	4.3	1.5	1.5	1.200	8	34
LE07SL	—	30	3.5×6×3.2	7	10	600	980	1170	8.3	2.0	2.0	1.587	17	55
LE09CL **LE09SL**	—	30	3.5×6×4.5	9	10	800	1860	2240	18	4.8	4.8	2.000	25	95
LE12CL	—	40	4.5×8×4.5	12	15	1000	2700	3150	35	8.2	8.2	2.381	50	140
LE15CL	23	40	4.5×8×4.5	9.5	15	1200	5000	5650	113	19	19	3.175	110	275

CL and SL types have only two mounting tap holes in the center.

The basic dynamic load rating is a load that furnishes 50 km rating fatigue life; it is a vertical and constant load to the ball slide mounting surface.
When converting the basic dynamic load rating C to the dynamic load rating C_{100} for 100 km rating fatigue life, divide the C by 1.26
For fixing a rail of LE05CL, use cross-recessed pan head machine screw for precision instruments M2.5x045 (JCIS 10-70 : Japan Camera Industry Association, No.0, class 2).

www.bergab.ru Берг АБ bergab@ya.ru Тел. (495)-228-06-21, факс (495) 223-3071

www.bergab.ru Берг АБ bergab@ya.ru Тел. (495)-228-06-21, факс (495) 223-3071

Dimensions of LE Series (Interchangeable ball slide)

LAE-AR (miniature, with ball retainer)
LAE-TR (miniature, large mounting tap hole, with ball retainer)

LA E 15 AR S – K

- LA: Interchangeable ball slide code
- E: Series
- 15: Size
- AR: Ball slide shape code (See Table I-2•2)
- S: Material code — S: Stainless steel
- K: Option code — -K: Equipped with standard NSK K1

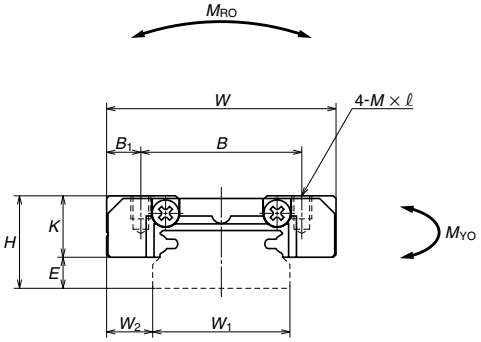

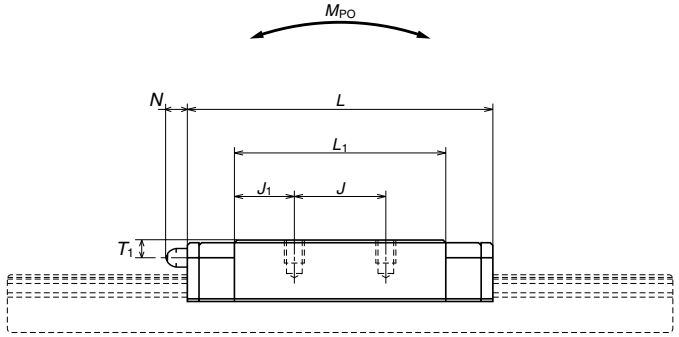

Table. I-5•29

Unit: mm

Model No.	Assembly: Height H	E	W_2	Ball slide: Width W	Length L	Mounting hole: B	J	M × pitch × ℓ	B_1	L_1	J_1	K	Greaase fitting: Hole size	T_1	N	Basic load rating: Dynamic C (N)	Static C_0 (N)	Static moment M_{RO} (N·m)	M_{PO} (N·m)	M_{YO} (N·m)	Ball dia. D_W	Weight Ball slide (g)
LAE09AR	12	4	6	30	39.8	21	12	M2.6×0.45×3	4.5	27.6	7.8	8	—	—	—	3000	4500	36	17	17	2.000	40
LAE09TR								M3×0.5×3					—	—	—							
LAE12AR	14	4	8	40	45	28	15	M3×0.5×4	6	31	8	10	—	—	—	4350	6350	71	29	29	2.381	75
LAE15AR	16	4	9	60	56.6	45	20	M4×0.7×4.5	7.5	38.4	9.2	12	∅3	3.2	3	7600	10400	207	59	59	3.175	150

The basic dynamic load rating is a load that furnishes 50 km rating fatigue life; it is a vertical and constant load to the ball slide mounting surface. When converting the basic dynamic load rating to the dynamic load rating C_{100} for 100 km rating fatigue life, divide the C by 1.26

www.bergab.ru Берг АБ bergab@ya.ru Тел. (495)-228-06-21, факс (495) 223-3071

www.bergab.ru Берг АБ bergab@ya.ru Тел. (495)-228-06-21, факс (495) 223-3071

Table of rail size for LE Series (Interchangeable rail)

Standard stock

Example of reference number

Regular rail (non-butting rail) with fine clearance

L1 E 09 0380 R K N T PC T**

- interchangeable rail code
- Series code
- Size code
- Rail length (mm)
- Shape code (See page 27)
  R: LU09, LU12 and LE standard equipped with ball retainer
- Material/surface treatment code (See Table I-4•1)
- *Butting rail specification
  N: Non-butting
  L: Butting specification
- *Design serial number
  T: Domestic standard
  K: Domestic semi-standard
  B: International user standard
- Accuracy code: PC
  (PC grade is only available)
- Preload code
  T: Fine clearance

* Please consult with NSK for butting rail specification.

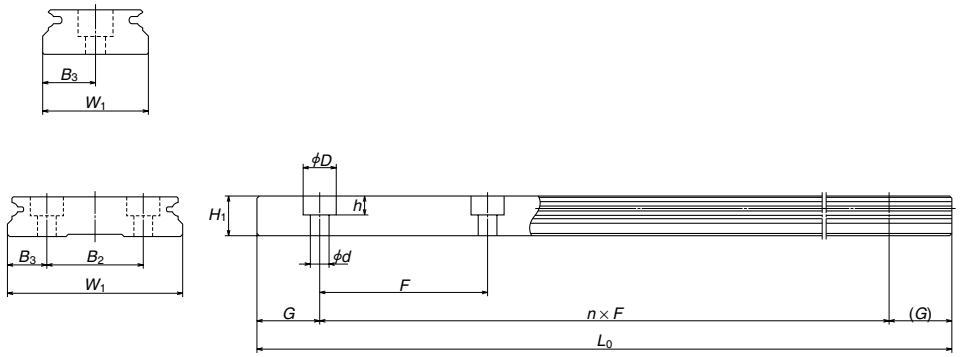

Table. I-5•30

Unit: mm

Model No.	Rail								Weight
	Width W_1	Height H_1	F	B_2	B_3	Mounting bolt hole $d \times D \times h$	G (recommended)	Max. length L_{0max}	(g/100mm)
L1E09	18	7.5	30	—	9	3.5×6×4.5	10	800	95
L1E12	24	8.5	40	—	12	4.5×8×4.5	15	1000	140
L1E15	42	9.5	40	23	9.5	4.5×8×4.5	15	1200	275

A-I-5.7 LU Series (Miniature type)

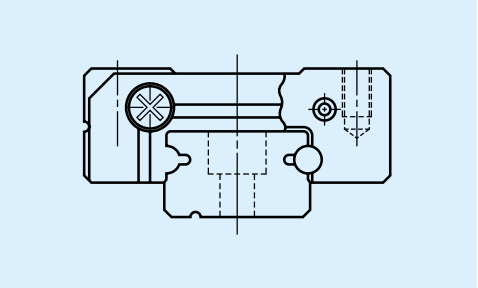

Fig. I-5•21 LU Series

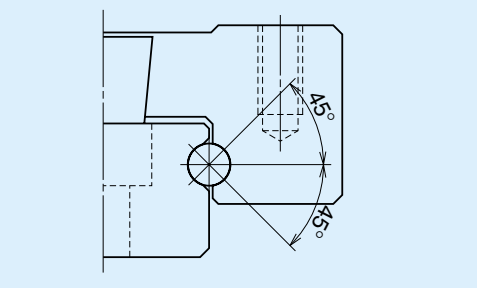

Fig. I-5•22 Balls are in contact.

(1) Super-small type.
This compact guide owes its design to the single ball groove on both right and left sides (gothic-arch) .

(2) Equal load carrying capacity in vertical and lateral directions
Contact angle is set at 45 degrees, equally load carrying capacity in vertical and lateral directions. This also provides equal rigidity in both directions.

(3) Stainless steel is also standardized.
Items made of the martensitic stainless steel are available as standard.

(4) Some series have a ball retainer.
Ball slide types AR and TR come with a ball retainer. Balls are retained in the retainer and do not fall out when the bearing is withdrawn from the rail. (Ball slides of interchangeable parts as well as LU15 come with ball retainer.)

(5) Interchangeable series is available (short delivery time)
The series enables random matching of rails and ball slides (interchangeability) for prompt delivery.

www.bergab.ru Берг АБ bergab@ya.ru Тел. (495)-228-06-21, факс (495) 223-3071

www.bergab.ru Берг АБ bergab@ya.ru Тел. (495)-228-06-21, факс (495) 223-3071

Dimensions of LU Series

LU-AL (Miniature, LU15 is equipped with ball retainer)
LU-TL (Miniature, large mounting tap hole)
LU-AR (Miniature, with ball retainer)
LU-TR (Miniature, large mounting tap hole, with ball retainer)

LU 12 0270 AL C 2 – PN 0 –Ⅱ**

- **Series**
- **Size**
- **Rail length (mm)**
- **Ball slide shape code**
  L: standard
  R: LU09 and LU12 standard equipped with ball retainer
- **Material/surface treatment code (See Page A27)**
- **Number of ball slides per rail**
- *** Design serial number**
- **Accuracy code (See table Ⅰ-3·1 and Ⅰ-4·2)**
- **Preload code 0: Z0 1: Z1(See page A23)**
- ***-Ⅱ: Use two rails as a set. Default: One rail use**

* Please note that we assign the design number, and omit the last code (Ⅱ) that indicates a use of two rails as a set to finalize the reference number as product identification.

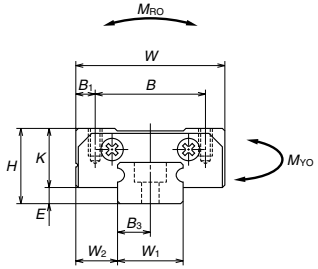

LU05TL, LU07AL
LU09AL, LU09TL

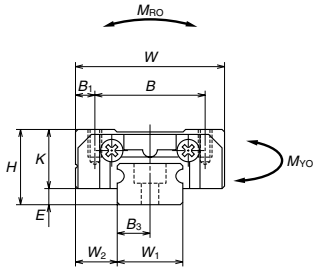

LU09AR, TR
LU12AL, TL, AR, TR
LU15AL

LU05TL

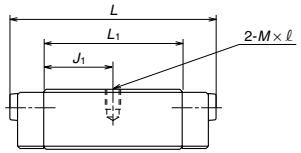

LU07AL
LU09AL, LU09TL

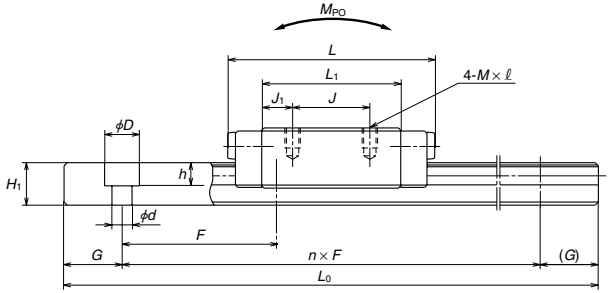

LU09AR, TR
LU12AL, TL, AR, TR
LU15AL

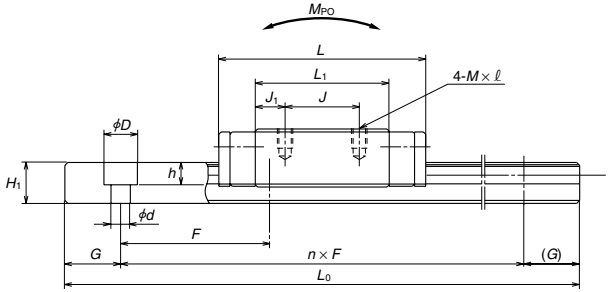

Table. Ⅰ-5·31

Unit: mm

Model No.	Assembly: Height H	Assembly: E	Assembly: W_2	Ball slide: Width W	Ball slide: Length L	Mounting hole: B	Mounting hole: J	Mounting hole: M×pitch×ℓ	B_1	L_1	J_1	K	Width W_1	Height H_1
LU05TL	6	1	3.5	12	18	8	—	M2×0.4×1.5	2	12	6	5	5	3.2
LU07AL	8	1.5	5	17	20.4	12	8	M2×0.4×2.4	2.5	13.6	2.8	6.5	7	4.7
LU09AL **LU09TL**	10	2.2	5.5	20	26.8	15	13 10	M2×0.4×2.5 M3×0.5×3	2.5	18	2.5 4	7.8	9	5.5
LU09AR **LU09TR**	10	2.2	5.5	20	30	15	13 10	M2×0.4×2.5 M3×0.5×3	2.5	20	3.5 5	7.8	9	5.5
LU12AL **LU12TL**	13	3	7.5	27	34	20	15	M2.5×0.45×3 M3×0.5×3.5	3.5	21.8	3.4	10	12	7.5
LU12AR **LU12TR**	13	3	7.5	27	35.2	20	15	M2.5×0.45×3 M3×0.5×3.5	3.5	21.8	3.4	10	12	7.5
LU15AL	16	4	8.5	32	43.6	25	20	M3×0.5×4	3.5	27	3.5	12	15	9.5

Model No.	Rail: Pitch F	Rail: Mounting bolt hole d×D×h	Rail: B_3	Rail: G (recommended)	Rail: Max. length L_{0MAX} ( ) for stainless	Basic load rating: Dynamic C (N)	Basic load rating: Static C_0 (N)	Static moment: M_{RO} (N·m)	Static moment: M_{PO} (N·m)	Static moment: M_{YO} (N·m)	Ball dia. D_W	Weight: Ball slide (g)	Weight: Rail (g/100mm)
LU05TL	15	2.3×3.3×1.5	2.5	5	— (210)	545	740	1.9	1.2	1.2	1.2	4	11
LU07AL	15	2.4×4.2×2.3	3.5	5	— (375)	1090	1370	4.9	2.7	2.7	1.587	10	23
LU09AL **LU09TL**	20	2.6×4.5×3 3.5×6×4.5	4.5	7.5	1200 (600)	1760	2220	10	6.1	6.1	2	17	35
LU09AR **LU09TR**	20	2.6×4.5×3 3.5×6×4.5	4.5	7.5	— (600)	1490	2150	9.9	6.1	6.1	1.587	19	35
LU12AL **LU12TL**	25	3×5.5×3.5 3.5×6×4.5	6	10	1800 (800)	2830	3500	21	11	11	2.381	38	65
LU12AR **LU12TR**	25	3×5.5×3.5 3.5×6×4.5	6	10	— (800)	2830	3500	21	11	11	2.381	38	65
LU15AL	40	3.5×6×4.5	7.5	15	2000 (1000)	5550	6600	49	26	26	3.175	70	105

LU05TL, LU07AL, LU09TL, LU09AR, LU09TR, LU12AR and LU12TR come in stainless steel only.
LU05TL has only two mounting tap holes in the center.
Side seals of LU05TL, LU07AL, LU09AL and LU09TL are available on request.

To fix rail of LU05TL, use M2 x 0.4 cross-recessed pan head machine screw for precision instrument.
(JCIS 10-70 No. 0 pan head machine screw No.1.)
(JCIS : Japanese Camera Industrial Standard.)
The basic dynamic load rating is a load that furnishes 50 km rating fatigue life; it is a vertical and constant load to the ball slide mounting surface.
When converting the basic dynamic load rating into a 100 km rating fatigue life, divide the C by 1.26

www.bergab.ru Берг АБ bergab@ya.ru Тел. (495)-228-06-21, факс (495) 223-3071

www.bergab.ru Берг АБ bergab@ya.ru Тел. (495)-228-06-21, факс (495) 223-3071

LU-BL (High load type, miniature)
LU-UL (High load type, miniature, large mounting tap hole)

LU 12 0270 BL C 2 – ** **PN 0 –Ⅱ**

- **Series**
- **Size**
- **Rail length (mm)**
- **Ball slide shape code**
- **Material/surface treatment code (See Page A27)**
- **Number of ball slides per rail**
- *** Design serial number**
- **Accuracy code (See table Ⅰ-3·1 and Ⅰ-4·2)**
- **Preload code 0: Z0 / 1: Z1(See page A23)**
- ***-Ⅱ: Use two rails as a set. Default: One rail use**

* Please note that we assign the design number, and omit the last code (Ⅱ) that indicates a use of two rails as a set to finalize the reference number as product identification.

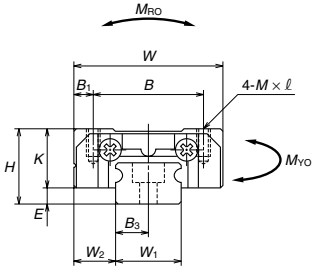

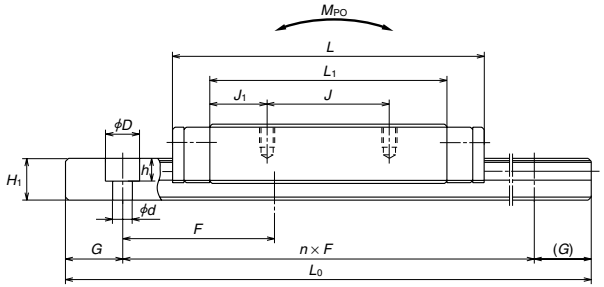

Table. Ⅰ-5·32

Unit: mm

Model No.	Assembly Height H	Assembly E	Assembly W_2	Ball slide Width W	Ball slide Length L	Mounting hole B	Mounting hole J	Mounting hole M × pitch × ℓ	B_1	L_1	J_1	K	Width W_1	Height H_1
LU09BL **LU09UL**	10	2.2	5.5	20	41	15	16	M2×0.4×2.5 M3×0.5×3	2.5	31.2	7.6	7.8	9	5.5
LU12BL **LU12UL**	13	3	7.5	27	47.5	20	20	M2.5×0.45×3 M3×0.5×3.5	3.5	35.3	7.65	10	12	7.5
LU15BL	16	4	8.5	32	61	25	25	M3×0.5×4	3.5	44.4	9.7	12	15	9.5

Rail Pitch F	Rail Mounting bolt hole d × D × h	Rail B_3	Rail G (recommended)	Rail Max. length L_{0MAX} ( ) for stainless	Basic load rating Dynamic C (N)	Basic load rating Static C_0 (N)	Static moment M_{RO} (N·m)	Static moment M_{PO} (N·m)	Static moment M_{YO} (N·m)	Ball dia. D_W	Weight Ball slide (g)	Weight Rail (g/100mm)
20	2.6×4.5×3 3.5×6×4.5	4.5	7.5	1200 (600)	2600	3900	18	17	17	2	29	35
25	3×5.5×3.5 3.5×6×4.5	6	10	1800 (800)	4000	5700	34	28	28	2.381	59	65
40	3.5×6×4.5	7.5	15	2000 (1000)	8100	11300	85	69	69	3.175	107	105

LU09UL is available only in stainless steel.
LU15BL is equipped with ball retainer.

The basic dynamic load rating is a load that furnishes 50 km rating fatigue life; it is a vertical and constant load to the ball slide mounting surface. When converting the basic dynamic load rating C to the dynamic load rating C_{100} for 100 km rating fatigue life, divide the C by 1.26

www.bergab.ru Берг АБ bergab@ya.ru Тел. (495)-228-06-21, факс (495) 223-3071

www.bergab.ru Берг АБ bergab@ya.ru Тел. (495)-228-06-21, факс (495) 223-3071

Dimensions of LU Series (Interchangeable ball slide)

LAU-AR (Miniature, with ball retainer)
LAU-TR (Miniature, large mounting tap hole, with ball retainer)
LAU-AL (LAU15 is equipped with ball retainer)

LA U 15 AL S – K

- Interchangeable ball slide code
- Series
- Size
- Ball slide shape code (See Table I-2•2)
- Material code: Default Standard material (Special high carbon steel); S: Stainless steel
- Option code: -K: Equipped with standard NSK K1

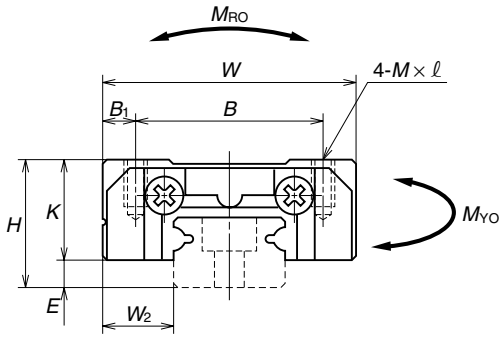

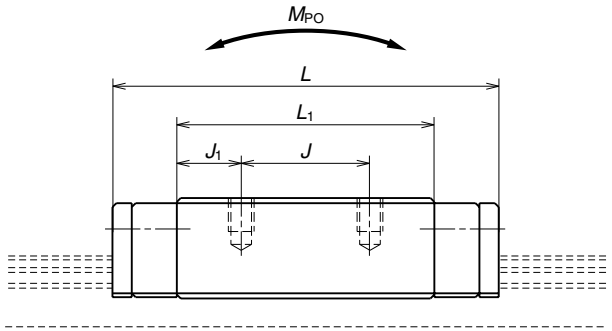

Table. I-5•33

Unit: mm

Model No.	Assembly			Ball slide									Basic load rating					Ball dia.	Weight
	Height			Width	Length	Mounting hole							Dynamic	Static	Static moment				Ball slide
	H	E	W_2	W	L	B	J	M × pitch × ℓ	B_1	L_1	J_1	K	C (N)	C_0 (N)	M_{RO} (N·m)	M_{PO} (N·m)	M_{YO} (N·m)	D_W	(g)
LAU09AR	10	2.2	5.5	20	30	15	13	M2×0.4×2.5	2.5	20	3.5	7.8	1490	2150	9.9	6.1	6.1	1.587	19
LAU09TR							10	M3×0.5×3			5								
LAU12AR	13	3	7.5	27	35.2	20	15	M2.5×0.45×3	3.5	21.8	3.4	10	2830	3500	21	11	11	2.381	38
LAU12TR								M3×0.5×3.5											
LAU15AL	16	4	8.5	32	43.6	25	20	M3×0.5×4	3.5	27	3.5	12	5550	6600	49	26	26	3.175	70

LAU09 and 12 are available only in stainless steel.
LAU15AL is equipped with ball retainer.

The basic dynamic load rating is a load that furnishes 50 km rating fatigue life; it is a vertical and constant load to the ball slide mounting surface.
When converting the basic dynamic load rating C to the dynamic load rating C_{100} for 100 km rating fatigue life, divide the C by 1.26

www.bergab.ru Берг АБ bergab@ya.ru Тел. (495)-228-06-21, факс (495) 223-3071

www.bergab.ru Берг АБ bergab@ya.ru Тел. (495)-228-06-21, факс (495) 223-3071

Dimensions of LU Series (Interchangeable rail)

Standard stock

Example of reference number

Regular rail (non-butting) with fine clearance

L1 U 09 0115 R K N T PC T**

- interchangeable rail code
- Series code
- Size code
- Rail length (mm)
- Shape code (See page 27)
  L: standard
  R: LU09 and LU12 standard equipped with ball retainer
  S: LU09 and LU12 with ball retainer and bolt holes for M3
- Material/surface treatment code (See Table I-4•1)
- *Butting rail specification
  N: Non-butting
  L: Butting specification
- *Design serial number
  T: Domestic standard
  K: Domestic semi-standard
  B: International user standard
- Accuracy code: PC (PC grade is only available)
- Preload code
  T: Fine clearance

* Please consult with NSK for butting rail specification.

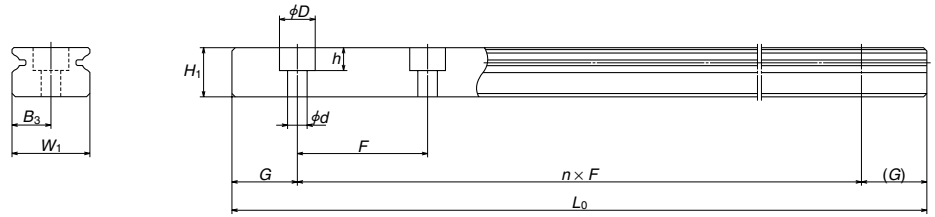

Table. I-5•34

Unit: mm

Model No.	Rail							Weight
	Width W_1	Height H_1	F	WB_3	Mounting bolt hole $d \times D \times h$	G (recommended)	Max. length L_{0MAX} ( ) for stainless	(g/100mm)
L1U09	9	5.5	20	4.5	2.6×4.5×3 3.5×6×4.5	7.5	(600)	35
L1U12	12	7.5	25	6	3×5.5×3.5 3.5×6×4.5	10	(800)	65
L1U15	15	9.5	40	7.5	3.5×6×4.5	15	2000 (1000)	105

A-I-5.8 LL Series

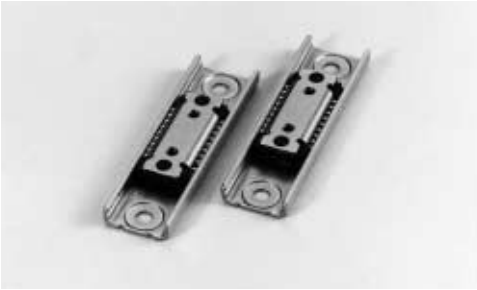

(1) Super light-weight, and compact

This compact guide has a single ball groove on both right and left sides (gothic arch). Rails and ball slides are made of stainless steel plate, therefore they are lightweight.

Also, the ball groove is made outside the ball slide to reduce overall size and to obtain high speed.

(2) Stainless steel is standard.

Rails and bearings are made of martensitic stainless steel.

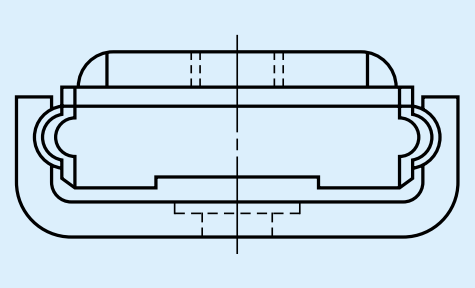

Fig. I-5•23 LL Series

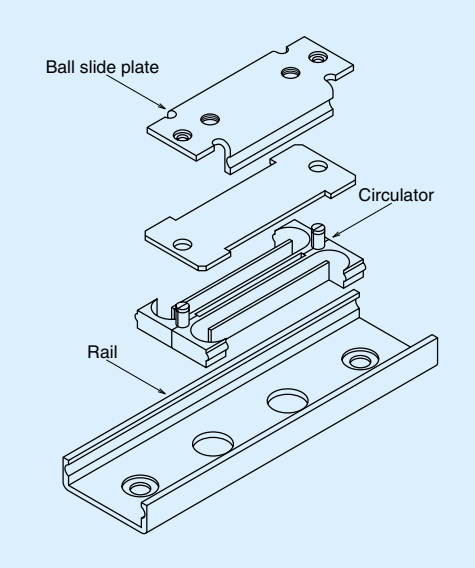

Fig. I-5•24 LL Series structure

www.bergab.ru Берг АБ bergab@ya.ru Тел. (495)-228-06-21, факс (495) 223-3071

www.bergab.ru Берг АБ bergab@ya.ru Тел. (495)-228-06-21, факс (495) 223-3071

Dimensions of LL Series

LL (Miniature, light-weight)

LL 15 0060 PL K 1 – PN 0 –Ⅱ**

- Series
- Size
- Rail length (mm)
- Ball slide shape code
- Material/surface treatment code (See Page A27)
- Number of ball slides per rail
- * Design serial number
- Accuracy code (See table Ⅰ-3·1 and Ⅰ-4·2)
- Preload code 0: Z0 (See page A23)
- *-Ⅱ: Use two rails as a set. Default: One rail use

* Please note that we assign the design number, and omit the last code (Ⅱ) that indicates a use of two rails as a set to finalize the reference number as product identification.

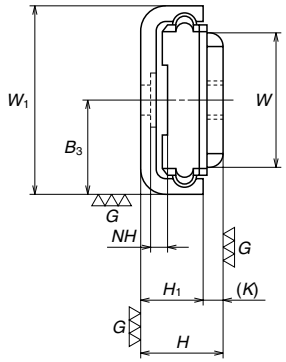

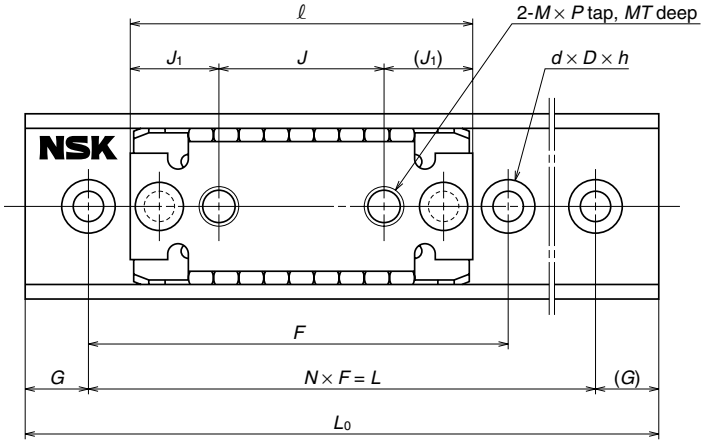

Table. Ⅰ-5·35

Unit: mm

Model No.	Assembly Height H	Assembly W_1	Ball slide Width W	Ball slide Length ℓ	Mounting hole J	Mounting hole $M \times$ pitch	MT	J_1	K	Height H_1	Pitch F	N
LL15	6.5	15	10.6	27	13	M3×0.5	1.2	7	1.5	5	30	1
											40	1
											30	2
											40	2
											50	2

Rail: Mounting bolt hole $d \times D \times h$	NH	B_3	G	Rail length L_0	Basic load rating Dynamic C (N)	Static C_0 (N)	Static moment M_{RO} (N·m)	M_{PO}	M_{YOW}	Ball dia. D_W	Weight Ball slide (g)	Rail (g)
2.4×5×0.4	1.2	7.5	5	40	880	785	7	3	3	2	6	9
			10	60								11
			7.5	75								13
			5	90								16
			10	120								21

Remarks:

1. LL Series does not have a ball retainer. Be aware that the balls fall out when a bearing is withdrawn from the rail.
2. Seal Is not available. Please provide the dust-prevention measures on the equipment.
3. Do not use an installation screw on the ball slide which exceeds MT (maximum screw depth allowance) in the dimension table.
4. Use "No.0 of Machine screw 1" of "cross recessed machine screw for precision machinery (Japan Camera Industry Association standard: JCIS 10-70)."

www.bergab.ru Берг АБ bergab@ya.ru Тел. (495)-228-06-21, факс (495) 223-3071

www.bergab.ru Берг АБ bergab@ya.ru Тел. (495)-228-06-21, факс (495) 223-3071

A-I-6 NSK S1™ Series Precision Linear Guides

The popular series has been updated and expanded into a complete lineup with a
new series of interchangeable products!
The NSK S1 Series Linear Guide features resin retainers between the balls to prevent collision and rubbing.
Ball groove construction is standard in the LH and LS Series.

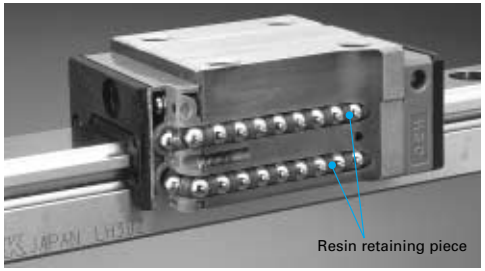

A-I-6.1 Feature

(1) Lower noise and gentler tone

Incorporating a retainer piece and optimizing the circulation path enables steel ball circulation stability and the prevention of ball collision, resulting in noise reduction by 5 dB (A) or more than that of conventional NSK products. In addition, contributing to sound improvement (human-friendly sound quality) with lower noise levels, especially in the high-frequency range.

Test conditions : Oil lubrication (VG68)
Locate a microphone at
500 mm above the sample
(both for LH30 and LS20)
*Noise level depends on the microphone location.
Noise level drops by approximately 6 dB (A) when the distance from the microphone is doubled.

Fig. I-6•1

Noise level comparison between LH30 and SH30

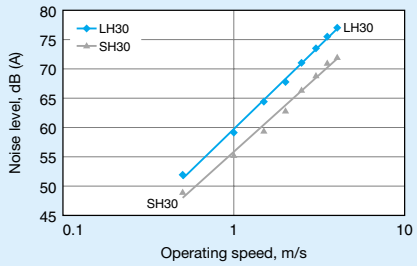

Fig. I-6•2

Noise level comparison between LS20 and SS20

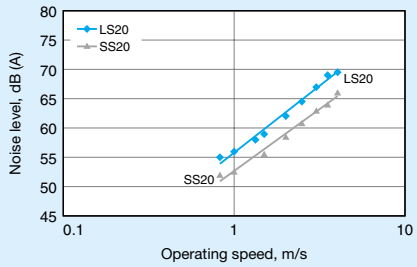

Fig. I-6•3

Sound intensity level comparison between LS20 and SS20

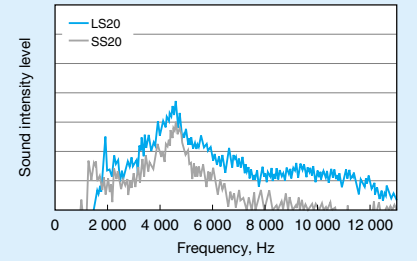

(2) Smoother motion

Improved steel ball circulation stability, free of interference between the balls improves dynamic friction characteristics, resulting in smooth and stable motion, which is especially effective for low speed motion.

Test model: NSK LH30 slight preload
Evaluation conditions: Grease lubrication, Operating speed of 1 m/min

Fig. I-6•4 Comparison in smooth motion between LH30 and SH30

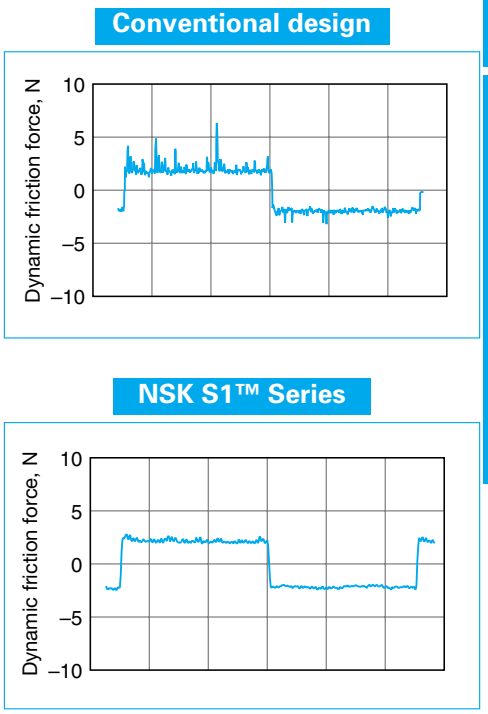

(3) Low dust generation

A resin retaining piece, which prevents steel balls collision, features effective low dust generation characteristics compared to conventional products.

Fig. I-6•5 Comparison of dust generation

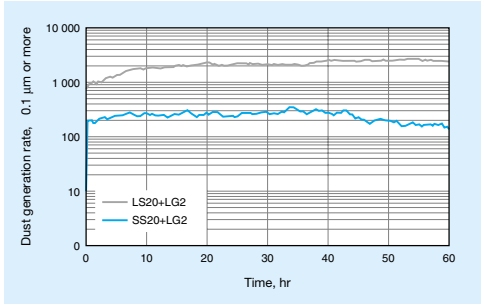

(4) Fast delivery

Lineup of interchangeable rails and ball slides in the series supports random matching and facilitates fast delivery.

www.bergab.ru Берг АБ bergab@ya.ru Тел. (495)-228-06-21, факс (495) 223-3071

www.bergab.ru Берг АБ bergab@ya.ru Тел. (495)-228-06-21, факс (495) 223-3071

(5) Accuracy

The preloaded assembly types products have four accuracy grades; Ultra precision P3, Super precision P4, High precision P5 and Precision P6, while the interchangeable types have a regular class PC.

Table 1 shows the accuracy standard for the preloaded assembly type of the SH Series and SS Series, while Table 2 shows the accuracy standard for the interchangeable types.

Table I-6•1 Accuracy grade for the preloaded assembly type

Item \ Accuracy grade	Ultra precision P3	Super precision P4	High precision P5	Precision P6
Mounting height: H	±10	±10	±20	±40
Variation of mounting height: H	3	5	7	15
(All slides on a pair or rails)				
Mounting width dimension: W_2 or: W_3	±15	±15	±25	±50
Variation of mounting width dimension: W_2(s) or: W_3(s)	3	7	10	20
(All slides on datum rails)				
Running parallelism of face C against face A Running parallelism of face D against face B	Shown in Table I-6 · 3			

Table I-6•2 Accuracy grade for the interchangeable type

Item \ Accuracy grade	Normal interchangeable types PC
Mounting height: H	±20
Variation of mounting height: H (one rail)	15
Variation of mounting height: H (multiple rails)	30
Assembly width dimension: W_2 or : W_3	±30
Variation of assembly width dimension: W_2(s) or: W_3(s)	25
(All slides on datum rails)	
Running parallelism of face C against face A Running parallelism of face D against face B	Shown in Table I-6 · 3

Table I-6•3 Running parallelism tolerance

Rail length (mm) over	or less	Preload assembly types: Ultra precision P3	Super precision P4	High precision P5	Precision P6	Interchangeable types: Normal interchangeable type PC
	50	2	2	2	4.5	6
50	80	2	2	3	5	6
80	125	2	2	3.5	5.5	6.5
125	200	2	2	4	6	7
200	250	2	2.5	5	7	8
250	315	2	2.5	5	8	9
315	400	2	3	6	9	11
400	500	2	3	6	10	12
500	630	2	3.5	7	12	14
630	800	2	4.5	8	14	16
800	1 000	2.5	5	9	16	18
1 000	1 250	3	6	10	17	20
1 250	1 600	4	7	11	19	23
1 600	2 000	4.5	8	13	21	26
2 000	2 500	5	10	15	22	29
2 500	3 150	6	11	17	25	32
3 150	4 000	9	16	23	30	34

Fig. I-6•6 Assembly dimentions

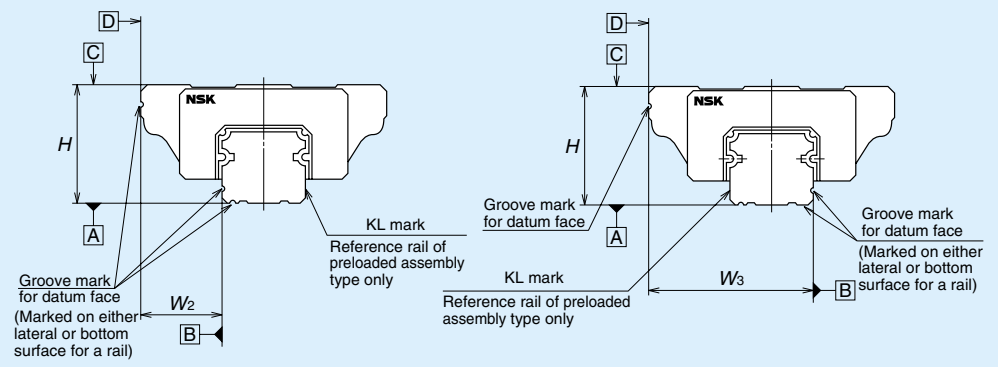

www.bergab.ru Берг АБ bergab@ya.ru Тел. (495)-228-06-21, факс (495) 223-3071

www.bergab.ru Берг АБ bergab@ya.ru Тел. (495)-228-06-21, факс (495) 223-3071

Fig. I-6•7 Running parallelism

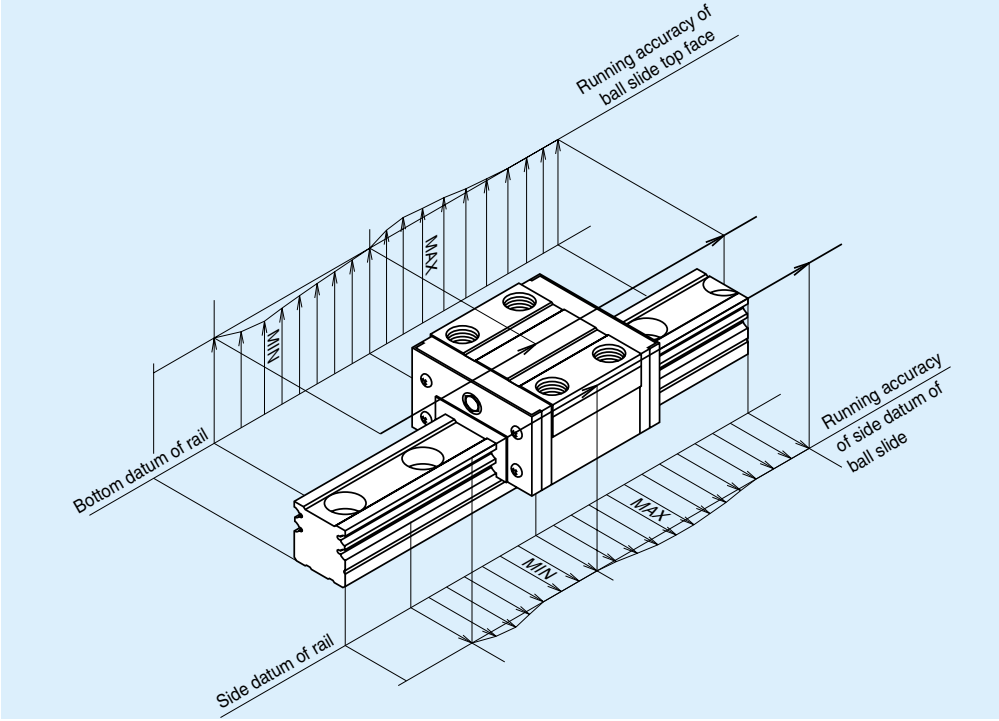

A-I-6.2 Preload and ridigity

We offer three levels of preload: Medium preload (Z3), Slight preload (Z1) and Fine clearance (Z0), along with interchangeable types of Fine clearance (ZZ). Values for preload and rigidity of the SH and SS Series are shown in Tables 4 and 5.

Table I-6•4 Preload and rigidity of the SH Series

	Model	Preload (N)		Rigidity (N/μm)			
				Vertical direction		Lateral direction	
		Slight preload (Z1)	Medium preload (Z3)	Slight preload (Z1)	Medium preload (Z3)	Slight preload (Z1)	Medium preload (Z3)
High load capacity type	SH15 AN、EL、FL、EM	78	441	127	215	88	166
	SH20 AN、EL、FL、EM	147	784	157	274	127	225
	SH25 AN、AL、EL、FL、EM	196	1180	186	343	137	255
	SH30 AN、AL	245	1470	196	363	137	265
	SH30 EL、FL、EM	294	1670	245	441	176	323
	SH35 AN、AL、EL、FL、EM	390	2160	294	529	205	382
	SH45 AN、EL、FL、EM	635	3700	397	727	283	529
	SH55 AN、EL、FL、EM	930	5600	482	891	336	635
Ultra high load capacity type	SH15 BN、GL、HL、GM	98	637	186	333	137	264
	SH20 BN、GL、HL、GM	196	1080	235	421	186	343
	SH25 BN、BL、GL、HL、GM	245	1570	284	529	196	382
	SH30 BN、BL、GL、HL、GM	343	2160	333	627	235	451
	SH35 BN、BL、GL、HL、GM	490	2840	411	755	284	529
	SH45 BN、GL、HL、GM	785	4600	515	944	367	686
	SH55 BN、GL、HL、GM	1180	6750	631	1148	440	817

Note: Because the clearance value for Fine clearance (Z0) is 0 – 3μm, the preload value is zero.

Table I-6•5 Preload and rigidity of the SS Series

	Model	Preload (N)		Rigidity (N/μm)			
				Vertical direction		Lateral direction	
		Slight preload (Z1)	Medium preload (Z3)	Slight preload (Z1)	Medium preload (Z3)	Slight preload (Z1)	Medium preload (Z3)
High load capacity type	SS15 AL、EL、FL、EM	69	392	118	216	88	157
	SS20 AL、EL、FL、EM	88	490	147	255	108	186
	SS25 AL、EL、FL、EM	147	833	196	353	137	255
	SS30 AL、EL、FL、EM	245	1370	245	441	176	323
	SS35 AL、EL、FL、EM	294	1860	284	539	205	392
Medium load capacity type	SS15 CL、JL、KL、JM	39	245	69	127	49	88
	SS20 CL、JL、KL、JM	59	343	88	157	59	118
	SS25 CL、JL、KL、JM	98	588	108	206	78	147
	SS30 CL、JL、KL、JM	147	882	127	235	98	176
	SS35 CL、JL、KL、JM	196	1180	166	304	117	225

Note: Because the clearance value for Fine clearance (Z0) is 0 – 3μm, the preload value is zero.

Table I-6•6 Preload and rigidity of the interchangeable types

unit: μm

Model	Slight preload ZZ
SH15	–4～0
SH20	–5～0
SH25	–5～0
SH30	–7～0
SH35	–7～0
SH45	–7～0
SH55	–8～0

Model	Slight preload ZZ
SS15	–4～0
SS20	–4～0
SS25	–5～0
SS30	–5～0
SS35	–6～0

Negative values indicate preload volume (elastic deformation of balls).

www.bergab.ru Берг АБ bergab@ya.ru Тел. (495)-228-06-21, факс (495) 223-3071

www.bergab.ru Берг АБ bergab@ya.ru Тел. (495)-228-06-21, факс (495) 223-3071

A-Ⅰ-6.3 Reference number

This number comprises codes and numbers which indicate key specifications, and is generated when the customer and NSK have defined specifications.

Example: SH 301000 AN C2-**PCZ–Ⅱ

- Series name
- Size
- Rail length (mm)
- Ball slide shape/height (See Table Ⅰ-2・2 in page A15)
- Material/surface treatment
  - C: Special carbon steel (NSK standard)
  - K: Stainless steel
  - D: Special carbon steel + Surface treatment
  - H: Stainless steel + Surface treatment(See Table Ⅰ-4・1 in page A27)
- Number of ball slides per rail
- * Design serial number
- Accuracy grade (See page A105)
- Preload (See page A107)
- *-Ⅱ: Use two rails as a set
  Default: One rail use

* Please note that we assign the design number, and omit the last code (Ⅱ) that indicates a use of two rails as a set to finalize the reference number as product identification.

(1) Combination of accuracy and preload

Table Ⅰ-6•7

		Accuracy grade				
		Ultra super precision	Super precision	Precision	High	Normal interchangeable type
Without NSK K1 lubrication unit		P3	P4	P5	P6	PC
With NSK K1 lubrication unit		K3	K4	K5	K6	KC
Preload	Fine clearance Z0	○	○	○	○	—
	Slight preload Z1	○	○	○	○	—
	Medium preload Z3	○	○	○	○	—
	Interchangeable preload ZZ	—	—	—	—	○

(2) Reference number for interchangeable types

Example: SAH 30 AN S Z

- Interchangeable ball slide
- Series name
- Size
- Ball slide shape/height
- S: Stainless steel
  No code: Special carbon steel (NSK standard)
- Preload Z: Slight preload

L1 S 15 1000 L C N T** PC Z

- Interchangeable rail
- Series name
- Size
- Rail length (mm)
- Shape code
  (L : standard, LS15 mouting hole for M3 specification T:LS15 mouting hole for M4 specification)
- Material/surface treatment code (See Table Ⅰ-4・1 in page A27)
- *Butting rail specification
  (N: Non-butting, L: Butting specification)
- Design serial number
  (T: Domestic standard, K: Domestic semi-standard, B: International user standard)
- Accuracy code: PC
  (PC grade is only available)
- Preload code
  (T: Fine clearance, Z: Slight preload)

* Please consult with NSK for butting rail specification.

A-Ⅰ-6.4 Application examples

- Applications that require lower noise levels and a lower level of vibration
  Instruments, printers, medical equipment, office machines, etc.
- Applications that require smoother motion
  Electric wire cutting discharge machines, scanners and pattern generators and steppers.

Handling Precautions

1. Temperature range ・・・・・ Maximum operating temperature: 50°C
   Maximum momentary temperature: 80°C
2. Usage conditions ・・・・・・ We recommend using "NSK S1™ Series" products in a clean environment in
   order to utilize their full range of capabilities.
3. Handling of interchangeable types
   ① Interchangeable ball slide will be delivered with a provisional rail (inserting fixture).
   ② Do not remove the ball slide from provisional rail until inserting into a rail.
   ③ Be sure to use the provisional rail when removing ball slide(s) form a rail.

www.bergab.ru Берг АБ bergab@ya.ru Тел. (495)-228-06-21, факс (495) 223-3071

www.bergab.ru Берг АБ bergab@ya.ru Тел. (495)-228-06-21, факс (495) 223-3071

Dimensions of SH Series

SH-AN (High load type)
SH-BN (Super high load type)

SH 35 0840 AN C 2 – ** PN 0 – Ⅱ

- Series name
- Size
- Rail length (mm)
- Ball slide shape/height
- Material/surface treatment
  - C: Special carbon steel (NSK standard)
  - K: Stainless steel (SH15 to SH30 only)
- Number of ball slides per rail
- * Design serial number
- Accuracy code (See page A105)
- Preload code · 0 : Z0 · 1 : Z1 · 3 : Z3 (See page A107)
- *-Ⅱ: Use two rails as a set; Default: One rail use

* Please note that we assign the design number, and omit the last code (Ⅱ) that indicates a use of two rails as a set to finalize the reference number as product identification.

Front view of AN and BN types

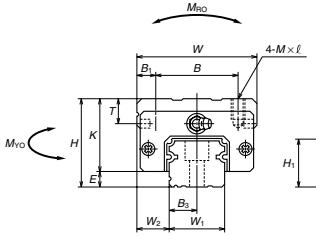

Side view of AN type

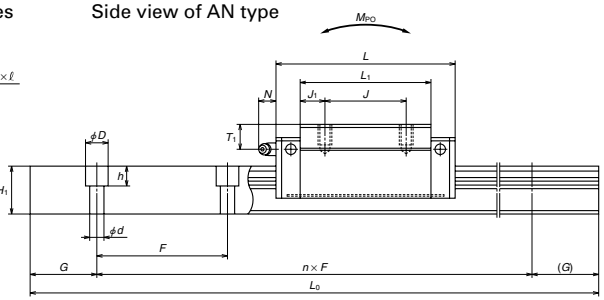

Side view of BN type

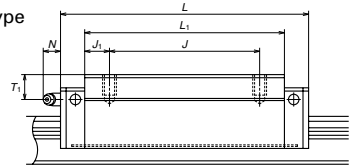

Model No.	Assembly Height H	E	W_2	Ball slide Width W	Length L	Mounting hole B	J	M×pitch×ℓ	B_1	L_1	J_1	K	T	Grease fitting Hole size	T_1	N
SH15AN SAH15AN	28	4.6	9.5	34	55	26	26	M4×0.7×6	4	39	6.5	23.4	8	ϕ3	8.5	3.3
SH15BN SAH15BN					74					58	16					
SH20AN SAH20AN	30	5	12	44	69.8	32	36	M5×0.8×6	6	50	7	25	12	M6×0.75	5	11
SH20BN SAH20BN					91.8		50			72	11					
SH25AN SAH25AN	40	7	12.5	48	79	35	35	M6×1×9	6.5	58	11.5	33	12	M6×0.75	10	11
SH25BN SAH25BN					107		50			86	18					
SH30AN SAH30AN	45	9	16	60	85.6	40	40	M8×1.25×10	10	59	9.5	36	14	M6×0.75	10	11
SH30BN SAH30BN					124.6		60			98	19					
SH35AN SAH35AN	55	9.5	18	70	109	50	50	M8×1.25×12	10	80	15	45.5	15	M6×0.75	15	11
SH35BN SAH35BN					143		72			114	21					
SH45AN SAH45AN	70	14	20.5	86	139	60	60	M10×1.5×17	13	105	22.5	56	17	Rc1/8	20	13
SH45BN SAH45BN					171		80			137	28.5					
SH55AN SAH55AN	80	15	23.5	100	163	75	75	M12×1.75×18	12.5	126	25.5	65	18	Rc1/8	21	13
SH55BN SAH55BN					201		95			164	34.5					

Reference number for rail of interchangeable types

For regular rails (non-jointed rail)

Example: L1 H 30 1200 L C N T PC Z**

- **interchangeable rail code**
- **Series code**
- **Size code**
- **Rail length (mm)**
- **Shape code (L: Standard)**
- **Material/surface treatment code (See Table Ⅰ-4•1)**
- ***Butting rail specification**
  - **N: Non-butting**
  - **L: Butting specification**
- ***Design serial number**
  - **T: Domestic standard**
  - **K: Domestic semi-standard**
  - **B: International user standard**
- **Accuracy code: PC (PC grade is only available)**
- **Preload code Z: Slight preload**

* Please consult with NSK for butting rail specification.

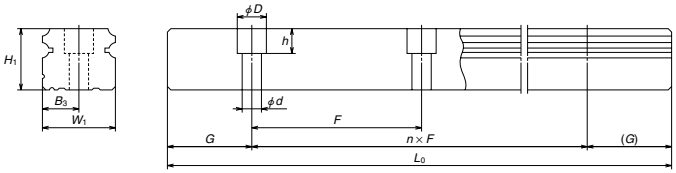

Reference number for ball slide of interchangeable types

Example: S A H 30 AN S Z

- Interchangeable ball slide
- Series name
- Size
- Ball slide shape/height
- S: Stainless steel; No code: Special carbon steel (NSK standard)
- Preload Z: Slight preload

AN type

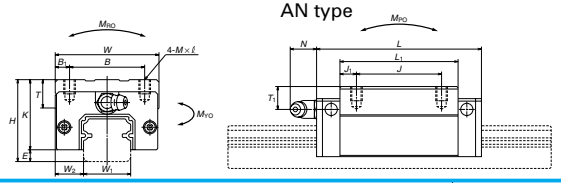

BN type

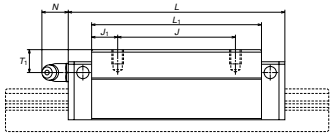

Rail Width W_1	Height H_1	Pitch F	Mounting bolt hole $d \times D \times h$	B_3	G (recommended)	Max. length L_{0max} () for stainless	Basic load rating Dynamic C (N)	Static C_0 (N)	Static moment M_{RO} (N·m)	M_{PO} (N·m)	M_{YO} (N·m)	Ball diameter D_W	Weight Ball slide (kg)	Rail (kg/m)
15	15	60	4.5×7.5×5.3	7.5	20	2 000	10 100	18 800	98	87	73	3.175	0.18	1.6
						(1 800)	13 400	28 200	147	193	162		0.26	
20	18	60	6×9.5×8.5	10	20	3 960	16 300	29 600	199	167	141	3.968	0.33	2.6
						(3 500)	21 600	44 500	298	360	305		0.48	
23	22	60	7×11×9	11.5	20	3 960	22 400	37 500	295	246	207	4.762	0.55	3.6
						(3 500)	32 000	62 500	490	615	515		0.82	
28	26	80	9×14×12	14	20	4 000	31 000	51 500	490	365	305	5.556	0.77	5.2
						(3 500)	46 000	91 500	870	1 060	885		1.3	
34	29	80	9×14×12	17	20	4 000	47 500	80 500	950	780	655	6.35	1.5	7.2
							61 500	117 000	1 380	1 600	1 340		2.1	
45	38	105	14×20×17	22.5	22.5	3990	76 500	128 000	1 970	1 550	1 300	7.937	3.0	12.3
							94 500	175 000	2 680	2 760	2 320		3.9	
53	44	120	16×23×20	26.5	30	3960	113 000	181 000	3 300	2 640	2 210	9.525	4.7	16.9
							140 000	247 000	4 550	4 800	4 050		6.1	

The basic dynamic load rating is a load that furnishes 50 km rating fatigue life; it is a vertical and constant load to the ball slide mounting surface.
When converting the basic dynamic load rating into the dynamic load rating C_{100} = 50 100 km rating fatigue life, divide the C by 1.26

www.bergab.ru Берг АБ bergab@ya.ru Тел. (495)-228-06-21, факс (495) 223-3071

www.bergab.ru Берг АБ bergab@ya.ru Тел. (495)-228-06-21, факс (495) 223-3071

SH-AL (High load type)
SH-BL (Super high load type)

SH 35 0840 AL C 2 – ** PN 0 – Ⅱ

- Series name
- Size
- Rail length (mm)
- Ball slide shape/height
- Material/surface treatment
  - C: Special carbon steel (NSK standard)
  - K: Stainless steel (SH15 to SH30 only)
- Number of ball slides per rail
- * Design serial number
- Accuracy code (See page A105)
- Preload code · 0 : Z0 · 1 : Z1 · 3 : Z3 (See page A107)
- *-Ⅱ: Use two rails as a set; Default: One rail use

* Please note that we assign the design number, and omit the last code (Ⅱ) that indicates a use of two rails as a set to finalize the reference number as product identification.

Front view of AL and BL types

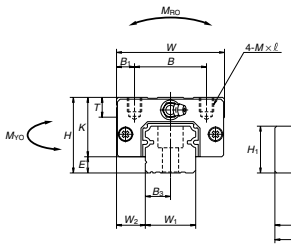

Side view of AL type

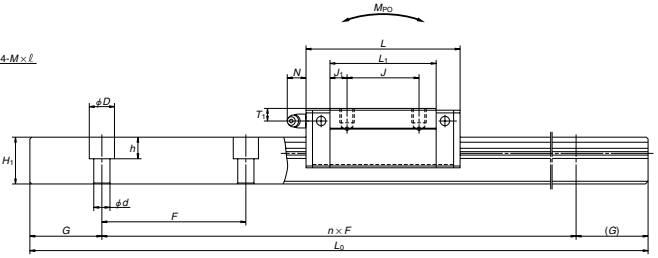

Side view of BL type

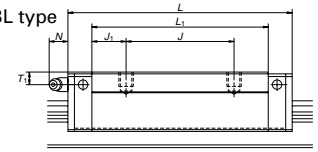

Model No.	Assembly Height H	E	W_2	Ball slide Width W	Length L	Mounting hole B	J	M×pitch×ℓ	B_1	L_1	J_1	K	T	Grease fitting Hole size	T_1	N
SH25AL SAH25AL	36	7	12.5	48	79	35	35	M6×1×6	6.5	58	11.5	29	12	M6×0.75	6	11
SH25BL SAH25BL					107		50			86	18					
SH30AL SAH30AL	42	9	16	60	85.6	40	40	M8×1.25×8	10	59	9.5	33	14	M6×0.75	7	11
SH30BL SAH30BL					124.6		60			98	19					
SH35AL SAH35AL	48	9.5	18	70	109	50	50	M8×1.25×8	10	80	15	38.5	15	M6×0.75	8	11
SH35BL SAH35BL					143		72			114	21					

Reference number for rail of interchangeable types

For regular rails (non-jointed rail)

Example: L1 H 30 1200 L C N T PC Z**

- **interchangeable rail code**
- **Series code**
- **Size code**
- **Rail length (mm)**
- **Shape code (L: Standard)**
- **Material/surface treatment code (See Table Ⅰ-4•1)**
- ***Butting rail specification**
  N: Non-butting
  L: Butting specification
- ***Design serial number**
  T: Domestic standard
  K: Domestic semi-standard
  B: International user standard
- **Accuracy code: PC (PC grade is only available)**
- **Preload code Z: Slight preload**

* Please consult with NSK for butting rail specification.

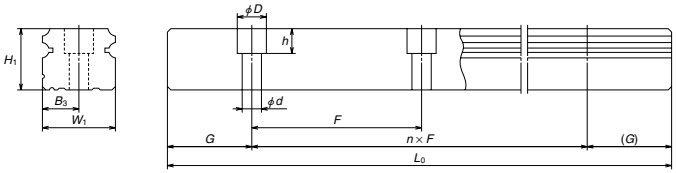

Reference number for ball slide of interchangeable types

Example: S A H 30 AL S Z

- Interchangeable ball slide
- Series name
- Size
- Ball slide shape/height
- S: Stainless steel; No code: Special carbon steel (NSK standard)
- Preload Z: Slight preload

AL type

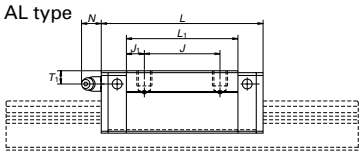

BL type

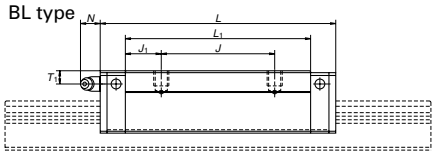

Rail Width W_1	Height H_1	Pitch F	Mounting bolt hole $d \times D \times h$	B_3	G (recommended)	Max. length L_{0max} ( ) for stainless	Basic load rating Dynamic C (N)	Static C_0 (N)	Static moment M_{RO} (N·m)	M_{PO} (N·m)	M_{YO} (N·m)	Ball diameter D_W	Weight Ball slide (kg)	Rail (kg/m)
23	22	60	7×11×9	11.5	20	3 960	22 400	37 500	295	246	207	4.762	0.46	3.6
						(3 500)	32 000	62 500	490	615	515		0.69	
28	26	80	9×14×12	14	20	4 000	31 000	51 500	490	365	305	5.556	0.69	5.2
						(3 500)	46 000	91 500	870	1 060	885		1.16	
34	29	80	9×14×12	17	20	4 000	47 500	80 500	950	780	655	6.35	1.2	7.2
							61 500	117 000	1 380	1 600	1 340		1.7	

The basic dynamic load rating is a load that furnishes 50 km rating fatigue life; it is a vertical and constant load to the ball slide mounting surface.
When converting the basic dynamic load rating C to the dynamic load rating C_{100} for 100 km rating fatigue life, divide the C by 1.26

www.bergab.ru Берг АБ bergab@ya.ru Тел. (495)-228-06-21, факс (495) 223-3071

www.bergab.ru Берг АБ bergab@ya.ru Тел. (495)-228-06-21, факс (495) 223-3071

SH-EL (High load type)
SH-GL (Super high load type)

SH 35 0840 EL C 2 – ** PN 0 – Ⅱ

- Series name
- Size
- Rail length (mm)
- Ball slide shape/height
- Material/surface treatment
  - C: Special carbon steel (NSK standard)
  - K: Stainless steel (SH15 to SH30 only)
- Number of ball slides per rail
- * Design serial number
- Accuracy code (See page A105)
- Preload code · 0 : Z0 · 1 : Z1 · 3 : Z3 (See page A107)
- *-Ⅱ: Use two rails as a set; Default: One rail use

* Please note that we assign the design number, and omit the last code (Ⅱ) that indicates a use of two rails as a set to finalize the reference number as product identification.

Front view of EL and GL types

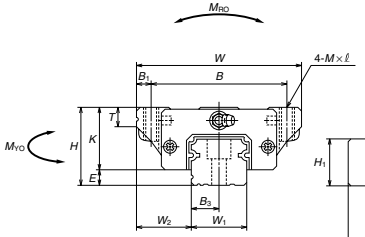

Side view of EL type

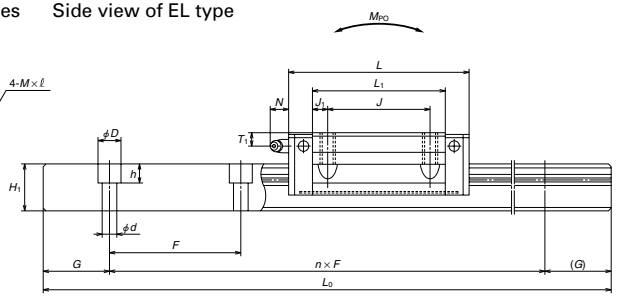

Side view of GL type

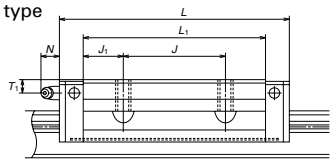

Model No.	Assembly Height H	E	W_2	Ball slide Width W	Length L	Mounting hole B	J	M×pitch×ℓ	B_1	L_1	J_1	K	T	Grease fitting Hole size	T_1	N
SH15EL SAH15EL SH15GL SAH15GL	24	4.6	16	47	55 74	38	30	M5×0.8×8	4.5	39 58	4.5 14	19.4	8	ϕ3	4.5	3.3
SH20EL SAH20EL SH20GL SAH20GL	30	5	21.5	63	69.8 91.8	53	40	M6×1×10	5	50 72	5 16	25	10	M6×0.75	5	11
SH25EL SAH25EL SH25GL SAH25GL	36	7	23.5	70	79 107	57	45	M8×1.25×16 (M8×1.25×12)	6.5	58 86	6.5 20.5	29	11 (12)	M6×0.75	6	11
SH30EL SAH30EL SH30GL SAH30GL	42	9	31	90	98.6 124.6	72	52	M10×1.5×18 (M10×1.5×15)	9	72 98	10 23	33	11 (15)	M6×0.75	7	11
SH35EL SAH35EL SH35GL SAH35GL	48	9.5	33	100	109 143	82	62	M10×1.5×20	9	80 114	9 26	38.5	12	M6×0.75	8	11
SH45EL SAH45EL SH45GL SAH45EL	60	14	37.5	120	139 171	100	80	M12×1.75×24	10	105 137	12.5 28.5	46	13	Rc1/8	10	13
SH55EL SAH55EL SH55GL SAH55GL	70	15	43.5	140	163 201	116	95	M14×2×28	12	126 164	15.5 34.5	55	15	Rc1/8	11	13

※Dimensions in ( ) are applicable to stainless steel products.
※The external appearance of stainless steel ball slide differs from that of standard material ball slide.

Reference number for rail of interchangeable types

For regular rails (non-jointed rail)

Example: L1 H 30 1200 L C N T PC Z**

- interchangeable rail code
- Series code
- Size code
- Rail length (mm)
- Shape code (L: Standard)
- Material/surface treatment code (See Table Ⅰ-4·1)
- *Butting rail specification
  - N: Non-butting
  - L: Butting specification
- *Design serial number
  - T: Domestic standard
  - K: Domestic semi-standard
  - B: International user standard
- Accuracy code: PC (PC grade is only available)
- Preload code Z: Slight preload

* Please consult with NSK for butting rail specification.

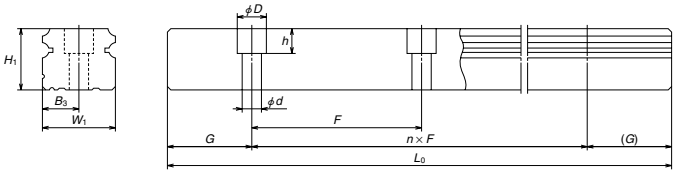

Reference number for ball slide of interchangeable types

Example: S A H 30 EL S Z

- Interchangeable ball slide
- Series name
- Size
- Ball slide shape/height
- S: Stainless steel; No code: Special carbon steel (NSK standard)
- Preload Z: Slight preload

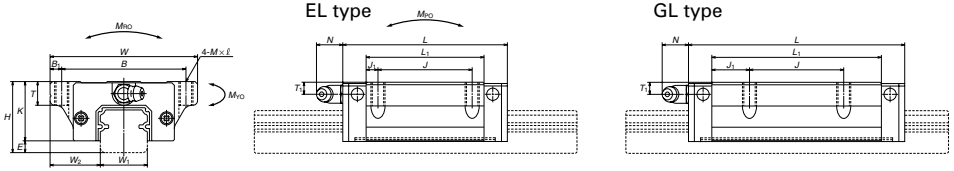

Rail Width W_1	Height H_1	Pitch F	Mounting bolt hole d×D×h	B_3	G (recommended)	Max. length L_{0max} ( ) for stainless	Basic load rating Dynamic C (N)	Static C_0 (N)	Static moment M_{RO} (N·m)	M_{PO} (N·m)	M_{YO} (N·m)	Ball diameter D_W	Weight Ball slide (kg)	Rail (kg/m)
15	15	60	4.5×7.5×5.3	7.5	20	2 000 (1 800)	10 100 13 400	18 800 28 200	98 147	87 193	73 162	3.175	0.17 0.25	1.6
20	18	60	6×9.5×8.5	10	20	3 960 (3 500)	16 300 21 600	29 600 44 500	199 298	167 360	141 305	3.968	0.45 0.65	2.6
23	22	60	7×11×9	11.5	20	3 960 (3 500)	22 400 32 000	37 500 62 500	295 490	246 615	207 515	4.762	0.63 0.93	3.6
28	26	80	9×14×12	14	20	4 000 (3 500)	35 500 46 000	63 000 91 500	600 870	540 1 060	450 885	5.556	1.2 1.6	5.2
34	29	80	9×14×12	17	20	4 000	47 500 61 500	80 500 117 000	950 1 380	780 1 600	655 1 340	6.35	1.7 2.4	7.2
45	38	105	14×20×17	22.5	22.5	3 990	76 500 94 500	128 000 175 000	1 970 2 680	1 550 2 760	1 300 2 320	7.937	3.0 3.9	12.3
53	44	120	16×23×20	26.5	30	3 960	113 000 140 000	181 000 247 000	3 300 4 550	2 640 4 800	2 210 4 050	9.525	5.0 6.5	16.9

The basic dynamic load rating is a load that furnishes 50 km rating fatigue life; it is a vertical and constant load to the ball slide mounting surface.
When converting the basic dynamic load rating into the dynamic load rating C_{100} for 100 km rating fatigue life, divide the C by 1.26

www.bergab.ru Берг АБ bergab@ya.ru Тел. (495)-228-06-21, факс (495) 223-3071

www.bergab.ru Берг АБ bergab@ya.ru Тел. (495)-228-06-21, факс (495) 223-3071

SH-EM
SH-FL **(High load type)**
SH-HL
SH-GM **(Super high load type)**

SH 350840 FL C 2 – ** PN 0 – Ⅱ

- Series name
- Size
- Rail length (mm)
- Ball slide shape/height
- Material/surface treatment
  - C: Special carbon steel (NSK standard)
  - K: Stainless steel (SH15 to SH30 only)
- Number of ball slides per rail
- * Design serial number
- Accuracy code (See page A105)
- Preload code · 0 : Z0
  · 1 : Z1
  · 3 : Z3
  (See page A107)
- *-Ⅱ: Use two rails as a set
  Default: One rail use

* Please note that we assign the design number, and omit the last code (Ⅱ) that indicates a use of two rails as a set to finalize the reference number as product identification.

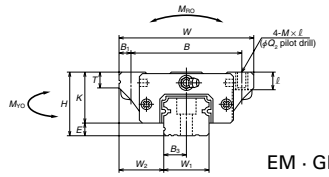

EM · GM type

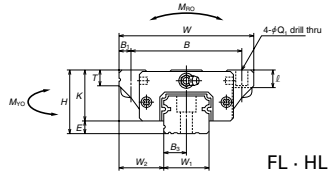

FL · HL type

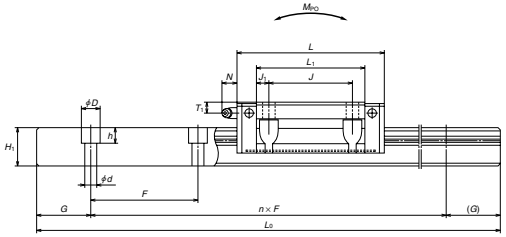

Reference number for rail of interchangeable types

For regular rails (non-jointed rail)

Example: **L1 H 30 1200 L C N T** PC Z**

- **interchangeable rail code**
- **Series code**
- **Size code**
- **Rail length (mm)**
- **Shape code (L: Standard)**
- **Material/surface treatment code (See Table Ⅰ-4•1)**
- ***Butting rail specification**
  N: Non-butting
  L: Butting specification
- ***Design serial number**
  T: Domestic standard
  K: Domestic semi-standard
  B: International user standard
- **Accuracy code: PC**
  (PC grade is only available)
- **Preload code**
  Z: Slight preload

* Please consult with NSK for butting rail specification.

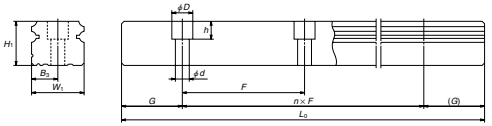

Reference number for ball slide of interchangeable types

Example: **S A H 30 FL S Z**

- Interchangeable ball slide
- Series name
- Size
- Ball slide shape/height
- S: Stainless steel
  No code: Special carbon steel (NSK standard)
- Preload Z: Slight preload

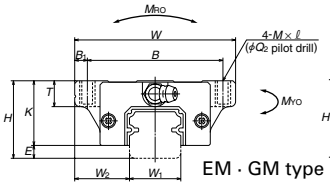

EM · GM type

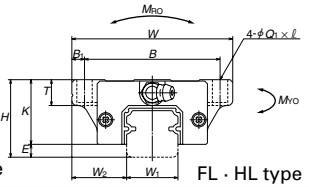

FL · HL type

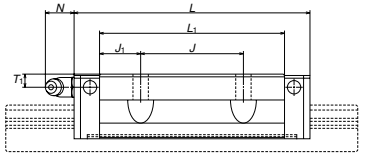

Model No.	Assembly Height H	E	W_2	Ball slide Width W	Length L	Mounting hole B	J	Q_1×ℓ M×pitch×ℓ	Q_2	B_1	L_1	J_1	K	T	Grease fitting Hole size	T_1	N
SH15FL SAH15FL SH15EM SAH15EM SH15HL SAH15HL SH15GM SAH15GM	24	4.6	16	47	55 74	38	30	4.5×7 M5×0.8×7 4.5×7 M5×0.8×7	– 4.4 – 4.4	4.5	39 58	4.5 14	19.4	8	ϕ3	4.5	3.3
SH20FL SAH20FL SH20EM SAH20EM SH20HL SAH20HL SH20GM SAH20GM	30	5	21.5	63	69.8 91.8	53	40	6×9.5 M6×1×9.5 6×9.5 M6×1×9.5	– 5.3 – 5.3	5	50 72	5 16	25	10	M6×0.75	5	11
SH25FL SAH25FL SH25EM SAH25EM SH25HL SAH25HL SH25GM SAH25GM	36	7	23.5	70	79 107	57	45	7×10(7×11.5) M8×1.25×10 (M8×1.25×11.5) 7×10(7×11.5) M8×1.25×10 (M8×1.25×11.5)	– 6.8 – 6.8	6.5	58 86	6.5 20.5	29	11 (12)	M6×0.75	6	11
SH30FL SAH30FL SH30EM SAH30EM SH30HL SAH30HL SH30GM SAH30GM	42	9	31	90	98.6 124.6	72	52	9×12(9×14.5) M10×1.5×12 (M10×1.5×14.5) 9×12(9×14.5) M10×1.5×12 (M10×1.5×14.5)	– 8.6 – 8.6	9	72 98	10 23	33	11 (15)	M6×0.75	7	11
SH35FL SAH35FL SH35EM SAH35EM SH35HL SAH35HL SH35GM SAH35GM	48	9.5	33	100	109 143	82	62	9×13 M10×1.5×13 9×13 M10×1.5×13	– 8.6 – 8.6	9	80 114	9 26	38.5	12	M6×0.75	8	11
SH45FL SAH45FL SH45EM SAH45EM SH45HL SAH45HL SH45GM SAH45GM	60	14	37.5	120	139 171	100	80	11×15 M12×1.75×15 11×15 M12×1.75×15	– 10.5 – 10.5	10	105 137	12.5 28.5	46	13	Rc1/8	10	13
SH55FL SAH55FL SH55EM SAH55EM SH55HL SAH55HL SH55GM SAH55GM	70	15	43.5	140	163 201	116	95	14×18 M14×2×18 14×18 M14×2×18	– 12.5 – 12.5	12	126 164	15.5 34.5	55	15	Rc1/8	11	13

Rail Width W_1	Height H_1	Pitch F	Mounting bolt hole d×D×h	B_3	G (recommended)	Max. length L_{0max} (): for stainless	Basic load rating Dynamic C (N)	Static C_0 (N)	Static moment M_{RO} (N·m)	M_{PO} (N·m)	M_{YO} (N·m)	Ball diameter D_W	Weight Ball slide (kg)	Rail (kg/m)
15	15	60	4.5×7.5×5.3	7.5	20	2000 (1800)	10100 13400	18800 28200	98 147	87 193	73 162	3.175	0.17 0.25	1.6
20	18	60	6×9.5×8.5	10	20	3960 (3500)	16300 21600	29600 44500	199 298	167 360	141 305	3.968	0.45 0.65	2.6
23	22	60	7×11×9	11.5	20	3960 (3500)	22400 32000	37500 62500	295 490	246 615	207 515	4.762	0.63 0.93	3.6
28	26	80	9×14×12	14	20	4000 (3500)	35500 46000	63000 91500	600 870	540 1060	450 885	5.556	1.2 1.6	5.2
34	29	80	9×14×12	17	20	4000	47500 61500	80500 117000	950 1380	780 1600	655 1340	6.35	1.7 2.4	7.2
45	38	105	14×20×17	22.5	22.5	3990	76500 94500	128000 175000	1970 2680	1550 2760	1300 2320	7.937	3 3.9	12.3
53	44	120	16×23×20	26.5	30	3990	113000 140000	181000 247000	3000 4550	2640 4800	2210 4050	9.525	5 6.5	16.9

※Dimensions in ( ) are applicable to stainless steel products.
※The external appearance of stainless steel ball slides differs from those of standard material ball slide.

*Under dynamic load rating is a load that furnishes 50% reliability for a nominal fatigue life of 50 km. Apply this constant load to the ball slide mounting surface.
When converting the basic dynamic load rating C to the dynamic load rating C_{100} for 100 km rating fatigue life, divide the C by 1.26

www.bergab.ru Берг АБ bergab@ya.ru Тел. (495)-228-06-21, факс (495) 223-3071

www.bergab.ru Берг АБ bergab@ya.ru Тел. (495)-228-06-21, факс (495) 223-3071

SS-AL (High load type)
SS-CL (Medium load type)

SS 35 0840 AL C 2 – ** PN 0 – Ⅱ

- Series name: SS
- Size: 35
- Rail length (mm): 0840
- Ball slide shape/height: AL
- Material/surface treatment: C
  - C: Special carbon steel (NSK standard)
  - K: Stainless steel
- Number of ball slides per rail: 2
- * Design serial number: **
- Accuracy code (See page A105): P
- Preload code: N
  - 0 : Z0
  - 1 : Z1
  - 3 : Z3
  - (See page A108)
- *-Ⅱ: Use two rails as a set
  - Default: One rail use

* Please note that we assign the design number, and omit the last code (Ⅱ) that indicates a use of two rails as a set to finalize the reference number as product identification.

Front view of AL and CL types

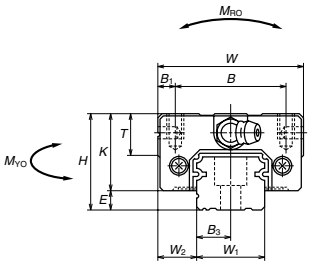

Side view of AL type

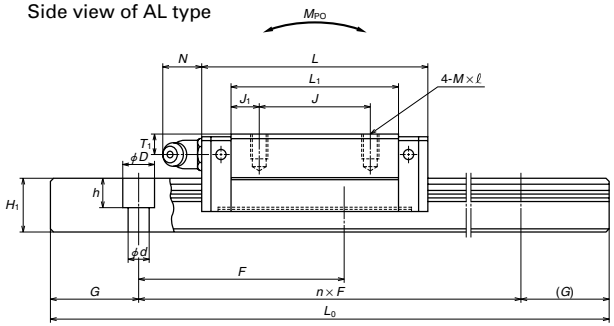

Side view of CL type

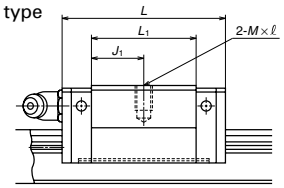

Model No.	Assembly Height H	E	W_2	Ball slide Width W	Length L	Mounting hole B	J	M×pitch×ℓ	B_1	L_1	J_1	K	T	Grease fitting Hole size	T_1	N
SS15CL SAS15CL	24	4.6	9.5	34	40.4	26	–	M4×0.7×6	4	23.6	11.8	19.4	10	ϕ3	6	3
SS15AL SAS15AL					56.8		26			40	7					
SS20CL SAS20CL	28	6	11	42	47.2	32	–	M5×0.8×7	5	30	15	22	12	M6×0.75	5.5	11
SS20AL SAS20AL					65.2		32			48	8					
SS25CL SAS25CL	33	7	12.5	48	59.6	35	–	M6×1×9	6.5	38	19	26	12	M6×0.75	7	11
SS25AL SAS25AL					81.6		35			60	12.5					
SS30CL SAS30CL	42	9	16	60	67.4	40	–	M8×1.25×12	10	42	21	33	13	M6×0.75	8	11
SS30AL SAS30AL					96.4		40			71	15.5					
SS35CL SAS35CL	48	10.5	18	70	77	50	–	M8×1.25×12	10	49	24.5	37.5	14	M6×0.75	8.5	11
SS35AL SAS35AL					108		50			80	15					

Reference number for rail of interchangeable types

For regular rails (non-jointed rail)

Example:

L1 S 15 1000 L C N T PC Z**

- Interchangeable ball slide: L1
- Series name: S
- Size: 15
- Rail length (mm): 1000
- Shape code: L
  - (L: Standard, LS15 mounting hole for M3 specification
  - T: LS15 mounting hole for M4 specification)
- Material/surface treatment code (See Table Ⅰ-4•1): C
- *Butting rail specification: N
  - (N: Non-butting, L: Butting specification)
- Design serial number: T
  - (T: Domestic standard, K: Domestic semi-standard, B: International user standard)
- Accuracy code: PC
  - (PC grade is only available)
- Preload code: Z
  - (Z: Slight preload)

* Please consult with NSK for butting rail specification.

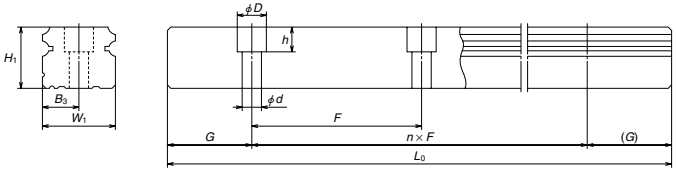

Reference number for ball slide of interchangeable types

Example:

S A S 30 AL S Z

- Interchangeable ball slide: S
- Series name: A
- Size: S
- Ball slide shape/height: 30 AL
- S: Stainless steel
  - No code: Special carbon steel (NSK standard)
- Preload Z: Slight preload

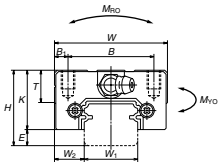

AL type

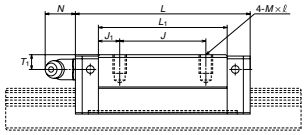

CL type

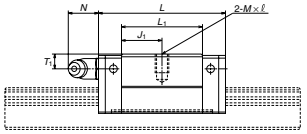

Rail Width W_1	Height H_1	Pitch F	Mounting bolt hole d×D×h	B_3	G (recommended)	Max. length L_{0max} ( ) for stainless	Basic load rating Dynamic C (N)	Static C_0 (N)	Static moment M_{RO} (N·m)	M_{PO} (N·m)	M_{YO} (N·m)	Ball diameter D_W	Weight Ball slide (kg)	Rail (kg/m)
15	12.5	60	※3.5×6×4.5	7.5	20	2 000	4 900	7 800	39	21	18	2.778	0.14	1.4
			4.5×7.5×5.3			(1 700)	7 900	15 600	78	74	62		0.2	
20	15.5	60	6×9.5×8.5	10	20	3 960	7 250	11 800	80	40	34	3.175	0.19	2.3
						(3 500)	11 100	21 800	149	124	104		0.28	
23	18	60	7×11×9	11.5	20	3 960	12 700	20 800	164	96	81	3.968	0.34	3.1
						(3 500)	17 900	33 500	266	242	203		0.51	
28	23	80	7×11×9	14	20	4 000	18 700	29 600	282	153	128	4.762	0.58	4.8
						(3 500)	27 300	50 500	480	415	350		0.85	
34	27.5	80	9×14×12	17	20	4 000	26 000	40 000	465	234	196	5.556	0.86	7
						(3 500)	38 000	68 500	800	620	520		1.3	

※ Standard mounting hole of SS15 rail is for M3 bolts (Hole size: 3.5×6×4.5).
If you require the mounting hole for M4 bolts (Hole size: 4.5×7.5×5.3), please specify it when ordering.

The basic dynamic load rating is a load that furnishes 50 km rating fatigue life; it is a vertical and constant load to the ball slide mounting surface.

When converting the basic dynamic load rating C to the dynamic load rating C_{100} for 100 km rating fatigue life, divide the C by 1.26

www.bergab.ru Берг АБ bergab@ya.ru Тел. (495)-228-06-21, факс (495) 223-3071

www.bergab.ru Берг АБ bergab@ya.ru Тел. (495)-228-06-21, факс (495) 223-3071

SS-EL (High load type)
SS-JL (Medium load type)

SS 350840 EL C 2 – ** PN 0 – Ⅱ

- Series name: SS
- Size: 35
- Rail length (mm): 0840
- Ball slide shape/height: EL
- Material/surface treatment: C
  - C: Special carbon steel (NSK standard)
  - K: Stainless steel
- Number of ball slides per rail: 2
- * Design serial number: **
- Accuracy code (See page A105): P
- Preload code: N
  - 0 : Z0
  - 1 : Z1
  - 3 : Z3
  - (See page A108)
- *-Ⅱ: Use two rails as a set
  - Default: One rail use

* Please note that we assign the design number, and omit the last code (Ⅱ) that indicates a use of two rails as a set to finalize the reference number as product identification.

Front view of EL and JL types

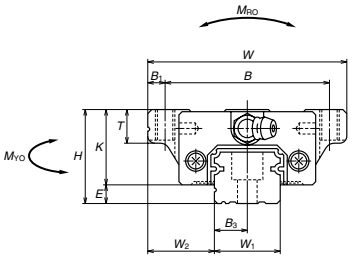

Side view of EL type

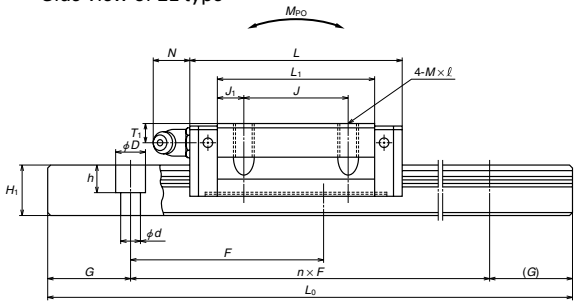

Side view of JL type

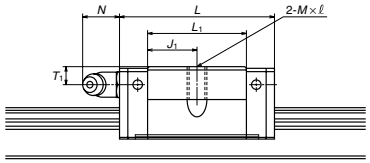

Model No.	Assembly Height H	E	W_2	Ball slide Width W	Length L	Mounting hole B	J	M×pitch×ℓ	B_1	L_1	J_1	K	T	Grease fitting Hole size	T_1	N
SS15JL **SS15EL SAS15EL**	24	4.6	18.5	52	40.4 56.8	41	– 26	M5×0.8×6	5.5	23.6 40	11.8 7	19.4	8	ϕ3	6	3
SS20JL **SS20EL SAS20EL**	28	6	19.5	59	47.2 65.2	49	– 32	M6×1×10	5	30 48	15 8	22	10	M6×0.75	5.5	11
SS25JL **SS25EL SAS25EL**	33	7	25	73	59.6 81.6	60	– 35	M8×1.25×12	6.5	38 60	19 12.5	26	11 (12)	M6×0.75	7	11
SS30JL **SS30EL SAS30EL**	42	9	31	90	67.4 96.4	72	– 40	M10×1.5×18 (M10×1.5×15)	9	42 71	21 15.5	33	11 (15)	M6×0.75	8	11
SS35JL **SS35EL SAS35EL**	48	10.5	33	100	77 108	82	– 50	M10×1.5×20 (M10×1.5×15)	9	49 80	24.5 15	37.5	12 (15)	M6×0.75	8.5	11

※Dimensions in ( ) are applicable to stainless steel products.
※The external appearance of stainless steel ball slides differs from those of standard material ball slide.

Reference number for rail of interchangeable types
For regular rails (non-jointed rail)

Example:

L1 S 151000 L C N T PC Z**

- Interchangeable ball slide: L1
- Series name: S
- Size: 15
- Rail length (mm): 1000
- Shape code: L
  - (L: Standard, LS15 mounting hole for M3 specification
  - T: LS15 mounting hole for M4 specification)
- Material/surface treatment code (See Table Ⅰ-4•1): C
- *Butting rail specification: N
  - (N: Non-butting, L: Butting specification)
- Design serial number: T
  - (T: Domestic standard, K: Domestic semi-standard, B: International user standard)
- Accuracy code: PC
  - (PC grade is only available)
- Preload code: Z
  - (Z: Slight preload)

* Please consult with NSK for butting rail specification.

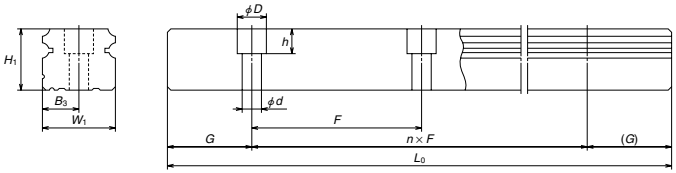

Reference number for ball slide of interchangeable types
Example:

S A S 30 EL S Z

- Interchangeable ball slide: S
- Series name: A
- Size: S
- Ball slide shape/height: 30 EL
- No code: Special carbon steel (NSK standard)
- S: Stainless steel
- Preload Z: Slight preload

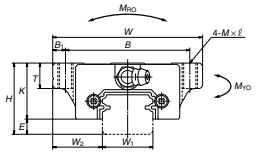

EL type

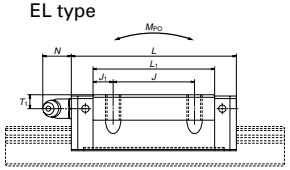

Rail Width W_1	Height H_1	Pitch F	Mounting bolt hole d×D×h	B_3	G (recommended)	Max. length L_{0max} ( ) for stainless	Basic load rating Dynamic C (N)	Static C_0 (N)	Static moment M_{RO} (N·m)	M_{PO} (N·m)	M_{YO} (N·m)	Ball diameter D_W	Weight Ball slide (kg)	Rail (kg/m)
15	12.5	60	※ 3.5×6×4.5 4.5×7.5×5.3	7.5	20	2 000 (1 700)	4 900 7 900	7 800 15 600	39 78	21 74	18 62	2.778	0.17 0.26	1.4
20	15.5	60	6×9.5×8.5	10	20	3 960 (3 500)	7 250 11 100	11 800 21 800	80 149	40 124	34 104	3.175	0.24 0.35	2.3
23	18	60	7×11×9	11.5	20	3 960 (3 500)	12 700 17 900	20 800 33 500	164 266	96 242	81 203	3.968	0.44 0.66	3.1
28	23	80	7×11×9	14	20	4 000 (3 500)	18 700 27 300	29 600 50 500	282 480	153 415	128 350	4.762	0.76 1.2	4.8
34	27.5	80	9×14×12	17	20	4 000 (3 500)	26 000 38 000	40 000 68 500	465 800	234 620	196 520	5.556	1.2 1.7	7

※ Standard mounting hole of SS15 rail is for M3 bolts (Hole size: 3.5×6×4.5).
If you require the mounting hole for M4 bolts (Hole size: 4.5×7.5×5.3), please specify it when ordering.
The basic dynamic load rating is a load that furnishes 50 km rating fatigue life; it is a vertical and constant load to the ball slide mounting surface.
When converting the basic dynamic load rating C to the dynamic load rating C_{100} for 100 km rating fatigue life, divide the C by 1.26

www.bergab.ru Берг АБ bergab@ya.ru Тел. (495)-228-06-21, факс (495) 223-3071

www.bergab.ru Берг АБ bergab@ya.ru Тел. (495)-228-06-21, факс (495) 223-3071

SS-FL (High load type)
SS-KL (Medium load type)

SS 350840 FL C 2 – ** PN 0 – Ⅱ

- Series name: SS
- Size: 350
- Rail length (mm): 840
- Ball slide shape/height: FL
- Material/surface treatment: C
  - C: Special carbon steel (NSK standard)
  - K: Stainless steel
- Number of ball slides per rail: 2
- * Design serial number: **
- Accuracy code (See page A105): P
- Preload code · 0 : Z0 · 1 : Z1 · 3 : Z3 (See page A108): N
- Default: One rail use; *-Ⅱ: Use two rails as a set: 0 – Ⅱ

* Please note that we assign the design number, and omit the last code (Ⅱ) that indicates a use of two rails as a set to finalize the reference number as product identification.

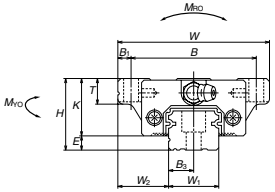

JM type

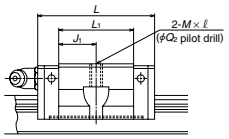

KL type

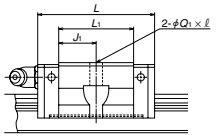

EM type

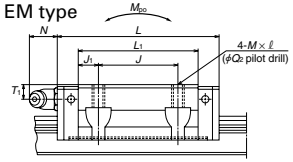

FL type

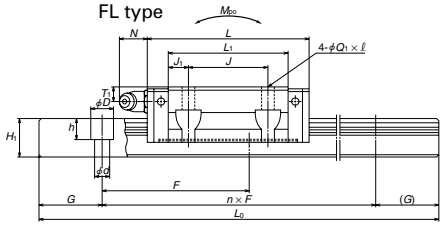

Reference number for rail of interchangeable types

For regular rails (non-jointed rail)

Example:

L1 S 15 1000 L C N T PC Z**

- Interchangeable ball slide: L1
- Series name: S
- Size: 15
- Rail length (mm): 1000
- Shape code: L
  - (L: Standard, LS15 mounting hole for M3 specification
  - T: LS15 mounting hole for M4 specification)
- Material/surface treatment code (See Table Ⅰ-4•1): C
- *Butting rail specification: N
  - (N: Non-butting, L: Butting specification)
- Design serial number: T
  - (T: Domestic standard, K: Domestic semi-standard, B: International user standard)
- Accuracy code: PC
  - (PC grade is only available)
- Preload code: Z
  - (Z: Slight preload)

* Please consult with NSK for butting rail specification.

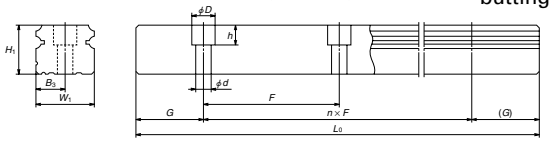

Reference number for ball slide of interchangeable types

Example:

S A S 30 FL S Z

- Interchangeable ball slide: S
- Series name: A
- Size: 30
- Ball slide shape/height: FL
- No code: Special carbon steel (NSK standard); S: Stainless steel
- Preload Z: Slight preload

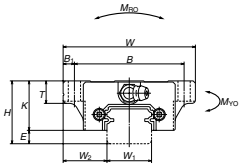

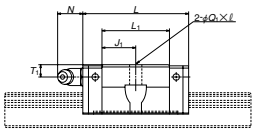

KL type

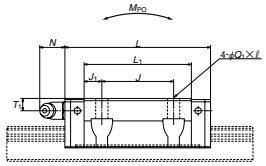

FL type

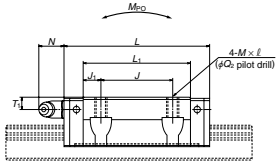

EM type

Model No.	Assembly Height H	E	W_2	Ball slide Width W	Length L	Mounting hole B	J	$Q_1\times\ell$ M×pitch×ℓ	Q_2	B_1	L_1	J_1	K	T	Grease fitting Hole size	T_1	N
SS15KL SAS15KL SS15JM SS15FL SAS15FL SS15EM SAS15EM	24	4.6	18.5	52	40.4 56.8	41	– 26	4.5×7 M5×0.8×7 4.5×7 M5×0.8×7	– 4.4 – 4.4	5.5	23.6 40	11.8 7	19.4	8	φ3	6	3
SS20KL SAS20KL SS20JM SS20FL SAS20FL SS20EM SAS20EM	28	6	19.5	59	47.2 65.2	49	– 32	5.5×9(5.5×9.5) M6×1×9 (M6×1×9.5) 5.5×9(5.5×9.5) M6×1×9 (M6×1×9.5)	– 5.3 – 5.3	5	30 48	15 8	22	10	M6×0.75	5.5	11
SS25KL SAS25KL SS25JM SS25FL SAS25FL SS25EM SAS25EM	33	7	25	73	59.6 81.6	60	– 35	7×10(7×11.5) M8×1.25×10 (M8×1.25×11.5) 7×10(7×11.5) M8×1.25×10 (M8×1.25×11.5)	– 6.8 – 6.8	6.5	38 60	19 12.5	26	11 (12)	M6×0.75	7	11
SS30KL SAS30KL SS30JM SS30FL SAS30FL SS30EM SAS30EM	42	9	31	90	67.4 96.4	72	– 40	9×12(9×14.5) M10×1.5×12 (M10×1.5×14.5) 9×12(9×14.5) M10×1.5×12 (M10×1.5×14.5)	– 8.6 – 8.6	9	42 71	21 15.5	33	11 (15)	M6×0.75	8	11
SS35KL SAS35KL SS35JM SS35FL SAS35FL SS35EM SAS35EM	48	10.5	33	100	77 108	82	– 50	9×13(9×14.5) M10×1.5×13 (M10×1.5×14.5) 9×13(9×14.5) M10×1.5×13 (M10×1.5×14.5)	– 8.6 – 8.6	9	49 80	24.5 15	37.5	12 (15)	M6×0.75	8.5	11

※Dimensions in ( ) are applicable to stainless steel products.
※The external appearance of stainless steel ball slides differs from those of standard material ball slide.

Rail Width W_1	Height H_1	Pitch F	Mounting bolt hole $d\times D\times h$	B_3	G (recommended)	Max. length L_{0max} ( ) for stainless	Basic load rating Dynamic C (N)	Static C_0 (N)	Static moment M_{RO} (N·m)	M_{PO} (N·m)	M_{YO} (N·m)	Ball diameter D_W	Weight Ball slide (kg)	Rail (kg/m)
15	12.5	60	※ 3.5×6×4.5 4.5×7.5×5.3	7.5	20	2000 (1700)	4900 7900	7800 15600	39 78	21 74	18 62	2.778	0.17 0.26	1.4
20	15.5	60	6×9.5×8.5	10	20	3960 (3500)	7250 11100	11800 21800	80 149	40 124	34 104	3.175	0.24 0.35	2.3
23	18	60	7×11×9	11.5	20	3960 (3500)	12700 17900	20800 33500	164 266	96 242	81 203	3.968	0.44 0.66	3.1
28	23	80	7×11×9	14	20	4000 (3500)	18700 27300	29600 50500	282 480	153 415	128 350	4.762	0.76 1.2	4.8
34	27.5	80	9×14×12	17	20	4000 (3500)	26000 38000	40000 68500	465 800	234 620	196 520	5.556	1.2 1.7	7

※ Standard mounting hole of SS15 rail is for M3 bolts (Hole size: 3.5×6×4.5).
If you require the mounting hole for M4 bolts (Hole size: 4.5×7.5×5.3), please specify it when ordering.
The basic dynamic load rating is a load that functions on the rail in the direction of the vertical and constant load to the ball slide mounting surface.
When converting the basic dynamic load rating C to the dynamic load rating C_{100} for 100 km fating fatigue life, divide the C by 1.26

www.bergab.ru Берг АБ bergab@ya.ru Тел. (495)-228-06-21, факс (495) 223-3071

www.bergab.ru Берг АБ bergab@ya.ru Тел. (495)-228-06-21, факс (495) 223-3071

A-I-7 MF Series

A-I-7.1 NSK Linear Guides Equipped with "NSK K1™" Lubrication Unit.

"NSK K1™" lowers machine operation cost, and reduces impact on the environment.

What is "long-term, maintenance-free" operation?

Ball screws and linear guides which are equipped with "NSK K1" do not require maintenance for five years or up to 10,000 km operational distance.

What is "NSK K1™" Lubrication Unit?

"NSK K1" is a lubrication device which combines oil and resin in a single unit. The porous resin contains a large amount of lubrication oil. Equipped closely to the rail, "NSK K1" constantly supplies fresh oil which seeps from the resin, lubricating the rail surface.

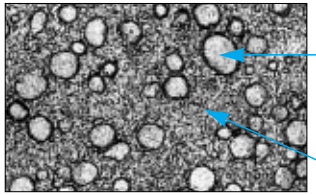

Enlarged surface of "NSK K1" Lubrication Unit 100μm

Polyolefin

Unlike vinyl chloride products, polyolefin does not produce dioxin. Polyolefin is also gaining use at supermarkets for food wrapping.

Lubrication oil

It is mineral oil-based. The oil has a viscosity of 100cSt.

Remarkable sealing capacity with new material: NSK K1™ Lubrication Unit information

- NSK K1 lubrication unit (referred to NSK K1 hereafter) to be equipped with NSK linear guide is outstanding new lubrication material.
- Newly developed "porous synthetic resin" contains large volume of lubricant oil, and it seeps out enhancing lubricating function.
- Simply install NSK K1 inside the standard end seal (rubber).

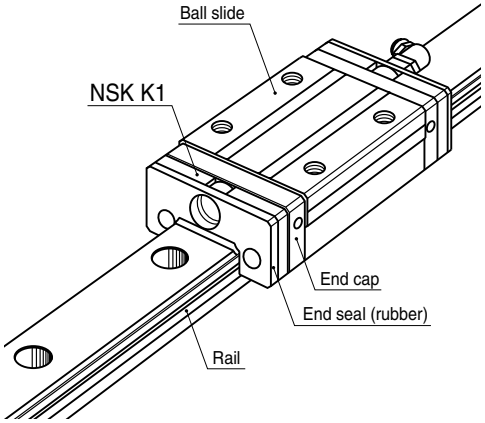

1) Features

K1 Seal comprises a part of the compact and efficient lubrication unit.

① Maintenance is required only infrequently

Used with grease, and maintains lubrication function for a long period of time. Ideal for systems/environments which make replenishment difficult.

▼

For automotive component processing lines, etc.

② Does not pollute the environment

A very small volume of grease combined with NSK K1 can provide sufficient lubrication in the environment where grease is undesirable as well as in the environment where high cleanliness is required.

▼

Food processing/medical equipment, liquid crystal display/semiconductor manufacturing equipment, etc.

③ Fits right in the environment where lubricant is washed away

Used with grease, life of the machine is prolonged even when the machine is washed entirely by water, or in an environment where the machine is exposed to rain or wind.

▼

Food processing equipment, housing/construction machines, etc.

④ Maintains efficiency in dusty environment

In environment where oil- and grease-absorbing dust is produced, long-term efficiency in lubrication and prevention from foreign inclusions are maintained by using the "NSK K1" in combination with grease.

▼

Woodworking machines, etc.

*Stainless steel linear guides and ball screws should be considered for use in corrosive environments or other environments where rusting is a potential problem.

2) Functions

NSK K1 has various superb functions. NSK's ample test data and field performances confirm K1 Seal's abilities.

① Durability test at high speed, with no other lubrication

Graph 1 shows test results under these conditions. The linear guide operated with no lubricant is unable to travel after a short period because breakage occurs. Equipped with NSK K1, the linear guide easily travels 25000 km.

Conditions:	Sample	LH30AN (preload Z1)
	Travel speed	200 m/min
	Stroke	1800 mm
No lubricant:	Completely degreased, no lubrication	
NSK K1:	Completely void of grease, no lubrication + NSK K1	

Graph 1 Durability test at high speed, with no lubrication (lubricated by NSK K1 only)

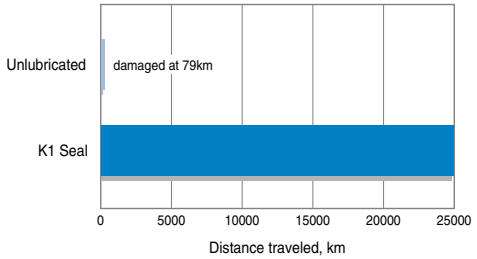

www.bergab.ru Берг АБ bergab@ya.ru Тел. (495)-228-06-21, факс (495) 223-3071

www.bergab.ru Берг АБ bergab@ya.ru Тел. (495)-228-06-21, факс (495) 223-3071

② Durability test immersed in water

Graph 2 shows test results after the linear guide is immersed in water once per week for 24 hours at a time, then traveled for 2700 km. Without NSK K1, the ball groove worn out in early stage and broke. With NSK K1, the wear was reduced to about 1/3 (Table 1). This test proves the effect of NSK K1.

Conditions: Sample: LS30 Stainless(pre-load Z1)
Travel speed: 24 m/min
Stroke: 400 mm
Load: 4700N/Brg
Lubricant: Fully packed with dedicated grease (*) for food machines

Immersing condition:
Immersed and traveled once per week for 24 hours at a time.

* Grease made in U.S.A.
Characteristic
Consistency: 280
Base oil viscosity: 580 (cSt)

Table 1 Comparison in wear of grooves and steel balls (2700 km)

(Unit:μm)

Lubricating condition	Ball slide groove	Rail groove	Steel balls
With NSK K1	16～18	2～3	6～8
Without NSK K1	30～45	9～11	17～25

Graph 2 Durability test immersed in water

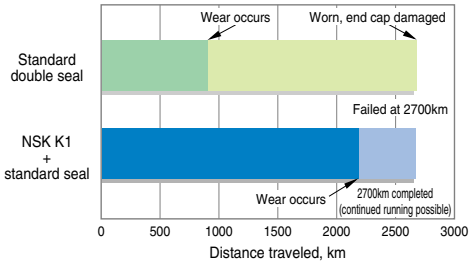

④ Dust emission

Graph 4 is a comparison of NSK K1 dust emissions. The combination of NSK K1 and NSK Clean Grease LG2 (low dust grease) generates as little dust as fluorine grease.

Conditions: Sample: LS20
Travel speed: 36 m/min

③ Durability test with wood chips

Wood chips absorb lubricant. Maintaining lubrication in such environment is extremely difficult. Graph 2 shows that the life when NSK K1 is added to a standard seal is two times longer than the life when two seals are combined (double seal -- current product).

Conditions: Sample: LH30AN (pre-load Z1)
Travel speed: 24 m/min
Stroke: 400 mm
Load: 490N/Brg

Seal specifications/lubricant:
Standard W Seal ··Standard W Seal + AV2 Grease
NSK K1·····NSK K1 + Standard seal + AV2 Grease

Wood chip conditions:
1·····Large volume of wood chips
2·····Medium volume of wood chips

Graph 3 Durability test with wood chips

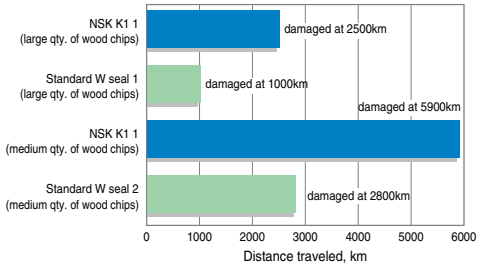

Graph 4 Comparison of dust emission

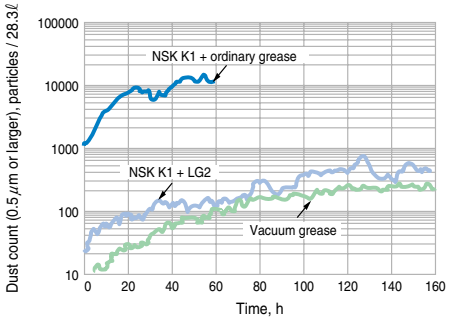

3) Application examples

Because of its excellent features and functions, the use of NSK K1 Seal is increasingly growing in various fields. Effects of VA, VE, and cost down are particularly highly regarded.

Machines using grease lubricant
▼
Can abolish lubricant supply pipe
Extensive intervals between maintenance

Machines using oil lubricant
▼
Can reduce oil supply
Can switch to grease lubrication (abolishing oil supply system)

For equipment whose maintenance is burdensome task
▼
No need for frequent maintenance

For equipment which is used in strict environment
▼
Easy to take measures against oil leak, oil spattering and pollution.

● Main Applications

● For automotive production facilities
- Lifter and carrier
- Multi-tier stock system
- Engine/chassis decking system
- Underbody line welding machine
- Body line conveyor system
- Marking machine
- Material handling system
- Sorting system
- Assembly vibration tester
- Assembly machine
- Differential gear grinding machine

● Semiconductors/liquid crystal display processing machines
- LCD substrates polishing machine
- LCD glass substrates transporting machine
- LCD glass substrate testing equipment (transporting section)
- Thin film processing equipment for semiconductors
- Washing machine
- Full automatic wafer mounter
- Washing section of the wafer polishing machine
- Carrier arm section of logic handler

● Robot systems
- Electric actuator
- Robot that removes molded plastic work from plastic injection machine

● Printing, book-binding and paper making machines
- Printer
- Screen printer
- Label printer
- Driving mechanism of photograph developing unit

● Woodworking, lumbering and construction machines
- Router
- Lumber cutting, groove making machines
- Pre-cutting machine
- Unmanned lumbering machine

● Optic and glass production machines
- Flat glass making machine
- Lens handling equipment

● Food and medical equipment
- Meat conveyor
- Dental chair slide drive section
- Ham wrapping machine

● Machine tools and related machines
- Telescopic cover for horizontal machining center
- Laser processing machine (X, Y axes)
- Pallet changer
- Water jet cutter

● Electric/communication systems
- Magnetic tape library

● Other machines

www.bergab.ru Берг АБ bergab@ya.ru Тел. (495)-228-06-21, факс (495) 223-3071

www.bergab.ru Берг АБ bergab@ya.ru Тел. (495)-228-06-21, факс (495) 223-3071

4) Specifications

(1) Applicable series and sizes

① Can be installed in the preloaded assemblies of LH, LS, LW, LU, LE, LY and LA Series, and LH, LS, LW, LU and LE Series interchangeable ball slide assemblies.

② Can be used with stainless steel materials and surface-treated items.

(2) Standard specifications

① Install NSK K1 Seal between the end seal and end cap. (Double-seal specification, and specification with protector are also available on request.)

② NSK standard grease is packed inside the ball slide.
LH, LS, LA, LY, LW Series: AS2 Grease is sealed.
LU, LE Series: PS2 Grease is sealed.
(Volume of grease, type of grease on request.)

③ Accuracy and preload are the same as standard items. (Dynamic friction increases slightly due to K1 Seal.)

5) Reference number

LH 30 1200 AN C 2 – ** **P5 Z3 – II**

- Series
- Size
- Rail length (mm)
- Ball slide shape code (See Table I-2•2)
- Material/surface treatment code (See Table I-4•1)
- Number of the ball slide per rail
- *Design serial number
- Accuracy grade code (See Table I-3•2 and I-4•2)
- Preload code (See Table I-3•2)
- *-II: Set of two guides for an axis Default: One guide

* Pleas note thet we assign the design number, and omit the last code (II) that indicates a use of two rails as a set to finalize the reference number as product identification.

6) Number of installed NSK K1

Normally, one NSK K1 should be installed on both sides of ball slide of NSK linear guides.

However, more NSK K1 may be required under more stringent drive and environment of the linear guide. Please consult NSK for details.

The length of the ball slides installed with NSK K1 is:

"Standard ball slide length" + "Thickness of each NSK K1" (V_1 x the number of NSK K1) + Thickness of protection cover (V_2 x 2)

Note: Thickness of the end-seal is not included in "Standard ball slide length" for LU05TL, LU07AL, LU09AL, and LU09TL. Add the following value to the obtained value from above for these series.

(Side-seal thickness : 1.5mm x 2) – (Screw head length LU05TL: 0.8mm x 2; LU07AL: none; LU09AL and LU09TL: 1mm x 2)]

7) Dimension tables

●Linear guides equipped with Lubrication Unit "NSK K1"

(1) LH, LS Series

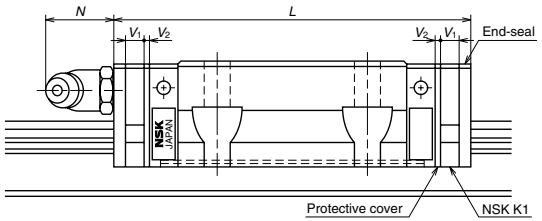

Table I-7•1 (Unit:mm)

Linear guide model	Ball slide length	Ball slide model	Standard ball slide length	Ball slide length installed with two NSK K1 L	Per NSK K1 thickness V_1	Protection cover thickness V_2	Protruding area of the grease fitting N
LH15	STANDARD	AN、EL、FL、EM	55	65.6	4.5	0.8	(5)
	LONG	BN、GL、HL、GM	74	84.6			
LH20	STANDARD	AN、EL、FL、EM	69.8	80.4	4.5	0.8	(14)
	LONG	BN、GL、HL、GM	91.8	102.4			
LH25	STANDARD	AL、AN、EL、FL、EM	79.0	90.6	5.0	0.8	(14)
	LONG	BL、BN、GL、HL、GM	107	118.6			
LH30	STANDARD	AL、AN	85.6	97.6	5.0	1.0	(14)
	FLANGE TYPE	EL、FL、EM	98.6	110.6			
	LONG	BL、BN、GL、HL、GM	124.6	136.6			
LH35	STANDARD	AL、AN、EL、FL、EM	109	122	5.5	1.0	(14)
	LONG	BL、BN、GL、HL、GM	143	156			
LH45	STANDARD	AN、EL、FL、EM	139	154	6.5	1.0	(15)
	LONG	BN、GL、HL、GM	171	186			
LH55	STANDARD	AN、EL、FL、EM	163	178	6.5	1.0	(15)
	LONG	BN、GL、HL、GM	201	216			
LH65	STANDARD	AN、EL、FL、EM	193	211	8.0	1.0	(16)
	LONG	BN、GL、HL、GM	253	271			
LS15	STANDARD	AL、EL、FL、EM	56.8	66.4	4.0	0.8	(5)
	SHORT	JL、CL、KL、JM	40.4	50			
LS20	STANDARD	AL、EL、FL、EM	65.2	75.8	4.5	0.8	(14)
	SHORT	JL、CL、KL、JM	47.2	57.8			
LS25	STANDARD	AL、EL、FL、EM	81.6	92.2	4.5	0.8	(14)
	SHORT	JL、CL、KL、JM	59.6	70.2			
LS30	STANDARD	AL、EL、FL、EM	96.4	108.4	5.0	1.0	(14)
	SHORT	JL、CL、KL、JM	67.4	79.4			
LS35	STANDARD	AL、EL、FL、EM	108	121	5.5	1.0	(14)
	SHORT	JL、CL、KL、JM	77	90			

www.bergab.ru Берг АБ bergab@ya.ru Тел. (495)-228-06-21, факс (495) 223-3071

www.bergab.ru Берг АБ bergab@ya.ru Тел. (495)-228-06-21, факс (495) 223-3071

(2) LY, LA Series

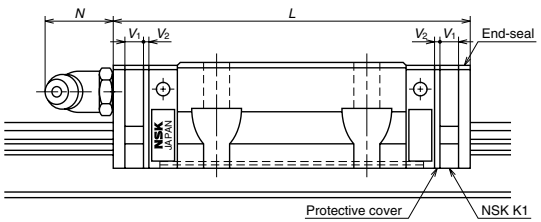

Table I-7•2 (Unit:mm)

Linear guide model	Ball slide length	Ball slide model	Standard ball slide length	Ball slide length installed with two NSK K1 *L*	Per NSK K1 thickness V_1	Protection cover thickness V_2	Protruding area of the grease fitting *N*
LY15	STANDARD	AL、AN、EL、FL	55	64.6	4	0.8	(3)
LY20	STANDARD	AL、EL、FL	69.4	80	4.5	0.8	(5)
	LONG	BL、GL、HL	85.4	96			
LY25	STANDARD	AN、AL、EL、FL	80.8	92.4	5.0	0.8	(14)
	LONG	BN、BL、GL、HL	102.8	114.4			
LY30	STANDARD	AN、AL、EL、HL、TL	95.2	108.2	5.5	1.0	(14)
	LONG	BN、BL、GL、HL	115.2	128.2			
LY35	STANDARD	AN、AL、EL、FL	110.4	123.4	5.5	1.0	(14)
	LONG	BN、BL、GL、HL	133.4	146.4			
LY45	STANDARD	AN、AL、EL、FL	137	152	6.5	1.0	(15)
	LONG	BN、BL、GL、HL	169	184			
LY55	STANDARD	AN、AL、EL、FL	160	175	6.5	1.0	(15)
	LONG	BN、BL、GL、HL	200	215			
LY65	STANDARD	AN、EL、FL	184.6	202.6	8.0	1.0	(16)
	LONG	BN、BL、GL、HL	244.6	262.6			
LA25	STANDARD	AN、EL、FL	79.8	91.8	5.0	1.0	(14)
	LONG	BN、GL、HL	107.8	119.8			
LA30	STANDARD	AN、EL、FL	100.2	113.2	5.5	1.0	(14)
	LONG	BN、GL、HL	126.2	139.2			
LA35	STANDARD	AN、AL、EL、FL	110.6	123.6	5.5	1.0	(14)
	LONG	BN、BL、GL、HL	144.6	157.6			
LA45	STANDARD	AN、AL、EL、FL	141.4	156.4	6.5	1.0	(15)
	LONG	BN、BL、GL、HL	173.4	188.4			
LA55	STANDARD	AN、AL、EL、FL	165.4	180.4	6.5	1.0	(15)
	LONG	BN、BL、GL、HL	203.4	218.4			
LA65	STANDARD	AN、EL、FL	196.2	214.2	8.0	1.0	(16)
	LONG	BN、GL、HL	256.2	274.2			

(3) LE, LU Series

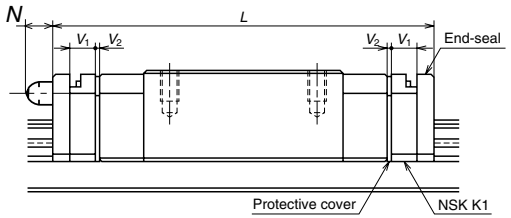

Table I-7•3 (Unit:mm)

Linear guide model	Ball slide length	Ball slide model	Standard ball slide length	Ball slide length installed with two NSK K1 *L*	Per NSK K1 thickness V_1	Protection cover thickness V_2	Protruding area of the grease fitting *N*
LE07	STANDARD	TL	31	37	2.5	0.5	—
	LONG	UL	42	48			
	SHORT	SL	22.4	28.4			
LE09	STANDARD	AR、TR	39.8	46.8	3.0	0.5	—
LE12	STANDARD	AR	45	53	3.5	0.5	—
LE15	STANDARD	AR	56.6	66.2	4.0	0.8	(5)
	STANDARD	AL	55.0	64.6			—
	LONG	BL	74.4	84			
	SHORT	CL	41.4	51			
LU05	STANDARD	TL	18*	24.4	2.0	0.5	—
LU07	STANDARD	AL	20.4*	29.4	2.5	0.5	—
LU09	STANDARD	AR、TR	30	36.4	2.7	0.5	—
	STANDARD	AL、TL	26.8*	34.2			
	LONG	BL、UL	41	47.4			
LU12	STANDARD	AR	35.2	42.2	3.0	0.5	—
	STANDARD	AL、TL	34	41			
	LONG	BL、UL	47.5	54.5			
LU15	STANDARD	AL	43.6	51.8	3.5	0.6	—
	LONG	BL	61	69.2			

* Standard ball slide length of LU05TL, LU07AL, LU09AL and LU09TL does not include thickness of the side-seal (1.5mm). However, it includes the length of the screw head for end cap installation (Included length – LU05: 0.8mm; LU07: no projection; LU09: 1mm)

www.bergab.ru Берг АБ bergab@ya.ru Тел. (495)-228-06-21, факс (495) 223-3071

www.bergab.ru Берг АБ bergab@ya.ru Тел. (495)-228-06-21, факс (495) 223-3071

(4) LW Series

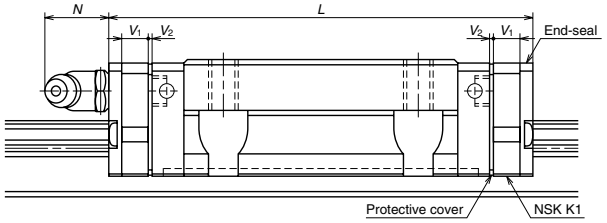

Table I-7•4 (Unit:mm)

Linear guide model	Ball slide length	Ball slide model	Standard ball slide length	Ball slide length installed with two NSK K1 *L*	Per NSK K1 thickness V_1	Protection cover thickness V_2	Protruding area of the grease fitting *N*
LW17	STANDARD	EL	51.4	61.6	4.5	0.6	(5)
LW21	STANDARD	EL	58.8	71.4	5.5	0.8	(13)
LW27	STANDARD	EL	74	86.6	5.5	0.8	(13)
LW35	STANDARD	EL	108	123	6.5	1.0	(13)
LW50	STANDARD	EL	140.6	155.6	6.5	1.0	(14)

Precautions for handling

To extend high functions of NSK K1 Seal, please observe the following precautions.

1. Temperature range for use: Maximum temperature for use: 50°C
   Momentary maximum temperature in use: 80°C

2. Chemicals that should not come to contact:
   Do not leave K1 Seal in organic solvent, white kerosene such as hexane, thinner which removes oil, and rust preventive oil which contains white kerosene.

Note: Water-type cutting oil, oil-type cutting oil, grease such as mineral-type AV2 and ester-type PS2 do not damage K1 Seal.

A-I-7•2 Interchangeable Ball Slide Series Equipped with NSK K1 Lubrication Unit

Linear guides which use NSK K1 lubrication unit now come in interchangeable ball slide. They are standard in stock for immediate delivery.

(1) Features

1. Easy to handle ▶ Rails and ball slides are randomly matched.
2. Ball slides can be purchased as single item ▶ Purchase only when necessary.
3. Standard in stock ▶ Delivery time is markedly short.
4. Comes with a cage ▶ Balls do not fall out of the ball slide.

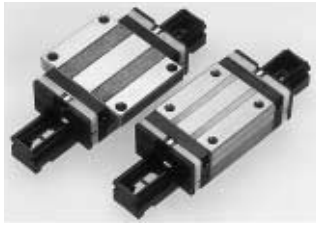

(2) Reference number

L A H 35 A N S Z - K

- interchangeable ball slide code
- Series
- Size
- Ball slide shape code (See Table I-2•2)
- Material code
  Default: Standard (Special high carbon steel)
  S: Stainless steel
- Preload code
  Default: Fine clearance Z: Slight preload
- Option code
  -K: Equipped with standard NSK K1
  -F: Fluoride low temperature chrome platin + standard grease
  -F50: Fluoride low temperature chrome platin + LG2 grease

(3) Accuracy and pre-load

Accuracy of random-matching is normal grade (PC).
Tables I-7•5 show preload value when assembled with rail.

Table I-7•5 Clearance and preload value μm

Series/model No.	Slight clearance (ZT)	Slight preload (ZZ)
LH15	15～−4	0～−4
LH20、25	15～−5	0～−5
LH30、35、45	15～−5	0～−7
LH55、65	15～−5	0～−9
LS15、20	15～−4	0～−4
LS25、30	15～−5	0～−5
LS35	15～−5	0～−6
LW17、21	15～−3	0～−3.5
LW27	15～−4	0～−4
LW35	15～−5	0～−5
LW50	15～−5	0～−7
LU、LE	15～0	—

www.bergab.ru Берг АБ bergab@ya.ru Тел. (495)-228-06-21, факс (495) 223-3071

www.bergab.ru Берг АБ bergab@ya.ru Тел. (495)-228-06-21, факс (495) 223-3071

Standard stock

Fig. I-7•1 LH Series Reference number (example): LAH30AN(Z)-K
LS Series Reference number (example): LAS30AL(Z)-K

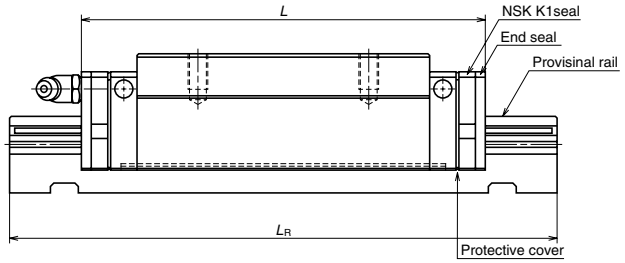

Fig. I-7•2 LW Series Reference numbler (example): LAW17EL(Z)-K

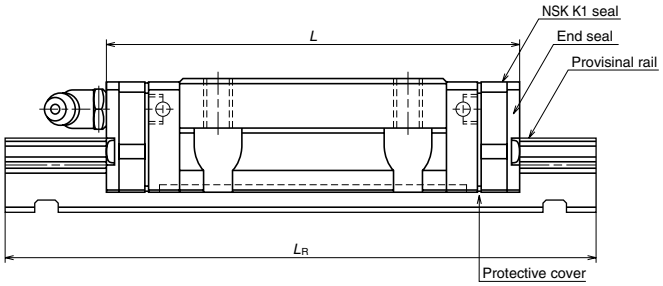

Fig. I-7•3 LE Series Reference number (example): LAE09AR-K
LU Series Reference number (example): LAU09AR-K

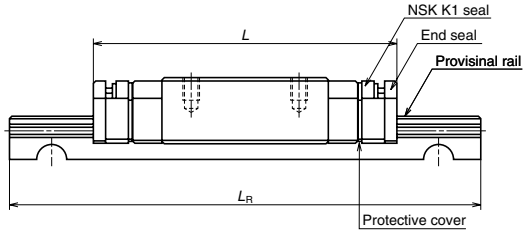

Table I-7•6

Interchangeable ball slide model number	Ball slide length	Ball slide shape code	Ball slide length L (mm)	Provisional rail length L_R (mm)	Protruding area of the grease fitting
LAH15	Standard	AN EL FL EM	65.6	130	(5)
	Long	BN GL HL GM	84.6		
LAH20	Standard	AN EL FL EM	80.4	137	(14)
	Long	BN GL HL GM	102.4		
LAH25	Standard	AL AN EL FL EM	90.6	152	(14)
	Long	BL BN GL HL GM	118.6		
LAH30	Standard	AL AN	97.6	170	(14)
	Flange	EM EL FL	110.6		
	Long	BL BN GL HL GM	136.6		
LAH35	Standard	AL AN EL FL EM	122	191	(14)
	Long	BL BN GL HL GM	156		
LAH45	Standard	AN EL FL EM	154	226	(15)
	Long	BN GL HL GM	186		
LAH55	Standard	AN EL FL EM	178	256	(15)
	Long	BN GL HL GM	216		
LAH65	Standard	AN EL FL EM	211	326	(16)
	Long	BN GL HL GM	271		
LAS15	Standard	AL EL FL EM	66.4	100	(5)
	Short	CL KL	50		
LAS20	Standard	AL EL FL EM	75.8	110	(14)
	Short	CL KL	57.8		
LAS25	Standard	AL EL FL EM	92.2	126	(14)
	Short	CL KL	70.2		
LAS30	Standard	AL EL FL EM	108.4	142	(14)
	Short	CL KL	79.4		
LAS35	Standard	AL EL FL EM	121	155	(14)
	Short	CL KL	90		
LAW17	Standard	EL	61.6	120	(5)
LAW21	Standard	EL	71.4	130	(13)
LAW27	Standard	EL	86.6	156	(13)
LAW35	Standard	EL	123	178	(13)
LAW50	Standard	EL	155.6	203	(14)
LAE09	Standard	AR TR	46.8	87	—
LAE12	Standard	AR	53	106	—
LAE15	Standard	AR	66.2	120	(5)
LAU09	Standard	AR TR	36.4	76	—
LAU12	Standard	AR TR	42.2	82	—
LAU15	Standard	AL	51.8	92	—

Precautions for handling

Please observe the following precautions to exhibit the superb high functions of the linear guides for a long time.

Ball slide is assembled to a plastic provisional rail when delivered.

- Wipe off the rust prevention oil from the seal.
- NSK standard grease is sealed inside the ball slide. You may use it without lubricating.
- Lightly press the provisional rail against the rail and insert the ball slide to the rail.

www.bergab.ru Берг АБ bergab@ya.ru Тел. (495)-228-06-21, факс (495) 223-3071

www.bergab.ru Берг АБ bergab@ya.ru Тел. (495)-228-06-21, факс (495) 223-3071

A-I-8 Linear Guides New Series

A-I-8.1 NSK Linear Guides Miniature LH Series

(1) Features

- **Large self-aligning property** · · **Capable of high mounting error absorption.**
- **High vertical load capacity** · · **50° contact angle enlarges vertical load capacity and rigidity.**
- **Withstands high impact load** · **Offset Gothic arch groove enables high impact resistance.**
- **High corrosion resistance** · · · **High corrosion resistant martensitic stainless steel is used as standard material.**
- **Easy handling** · · · · · · · · **Ball retainer prevents balls from falling off the ball slide, even if a ball slide is taken out from the rail (#10 and 12).**
- **Long term, maintenance** · · · **Optional NSK K1™ lubrication unit supports long term, maintenance-free operation.**

(2) Specification Number

when making inquiries about liner guides of which specifications are not finalized yet, you may use the reference number coding system excluding the design serial number described below. The coding system finalizing the reference number as the product identificaation, we assign the design serial number and omit the last cod (II) which refers to use two linear guides as a set for a motion axis. Please be advised that the reference number is only to identify the linear guide with one rail. When you use two linear guides as a set, order two identical linear guides in one reference number or specify reference numbers of each linear guide.

LH 12 0800 AN K 2 - ** P5 1 - II

- Series code
- Size No.
- Rail length (mm)
- Ball slide shape code
- Material and surface treatment code
  K: Stainless steel
- Number of ball slides per rail
- Clearance symbol
- Accuracy grade: PN: Normal; P6: Precision; P5: High precision; P4: Super precision
- Preload code: Z0: Precise clearance; Z1: Very light preload
- II: Two rails, No code: One rail

* Please note that we assign the design number, and omit the last code (II) that indicates a use of two rails as a set to finalize the reference number as product identification.

(3) Rail Length

The maximum single rail length is shown in the following table. Two rails must be butted for longer lengths.

Table I-8·1. Maximum rail length

Unit: mm

Size No.	08	10	12
Maximum rail length	375	600	800

(4) Accuracy Standard

Four accuracy grades are available: super precision P4, high precision P5, precision P6, and normal PN.

Table I-8·2. Accuracy standard

Unit: μm

Accuracy grade / Items	Super precision P4	High precision P5	Precision P6	Normal PN
Assembly height H	±10	±20	±40	±80
Variation of assembly height H (All slides on a pair of rails)	3	5	7	15
Assembly width dimension W_2 or W_3	±10	±15	±25	±50
Variation of assembly width dimension W_2 or W_3 (All slides on datum rails)	5	7	10	20
Running parallelism of face C against face A	See Fig. I-8·1. and Fig. I-8·2.			
Running parallelism of face D against face B	Refer to Table I-8·3. for tolerance			

Table I-8·3. Running parallelism of ball slide

Unit: μm

Accuracy grade / Total rail length (mm)	P4	P5	P6	PN
Over~below 50	2	2	4.5	6
50~80	2	3	5	6
80~125	2	3.5	5.5	6.5
125~200	2	4	6	7
200~250	2.5	5	7	8
250~315	2.5	5	8	9
315~400	3	6	9	11
400~500	3	6	10	12
500~630	3.5	7	12	14
630~800	4.5	8	14	16

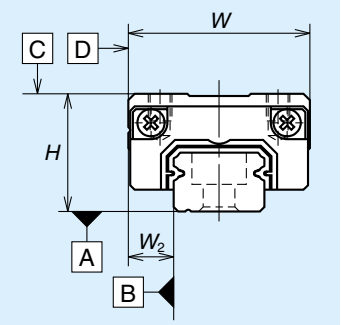

Fig. I-8·1. Mounting width W_2 (Standard)

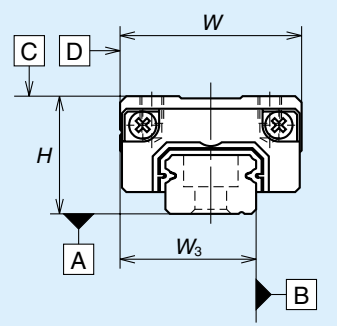

Fig. I-8·2. Mounting width W_3 (Semi-standard)

(5) Preload and Clearance

This product is available with a slight preload, Z1, or a slight clearance, Z0 (0-3 microns of clearance for all accuracy grades except PN which has 0-5 microns of clearance).

Table I-8·4. preload and rigidity

	Preload (N)	rigidity (N/μm)	
		Vertical direction	Lateral direction
	Slight preload Z1	Slight preload Z1	Slight preload Z1
LH08	5	33	23
LH10	9	44	31
LH12	22	68	47

(6) Option

The NSK K1™ lubrication unit is available as an option. Refer to Table I-8·5 for dimension of linear guides equipped with the NSK K1™.

Table I-8·5. Dimension of linear guides equipped with NSK K1™

Unit: μm

Model No.	Ball slide length equipped with two NSK K1s
LH08	31
LH10	40
LH12	54

www.bergab.ru Берг АБ bergab@ya.ru Тел. (495)-228-06-21, факс (495) 223-3071

www.bergab.ru Берг АБ bergab@ya.ru Тел. (495)-228-06-21, факс (495) 223-3071

(7) Dimensions of LH Series

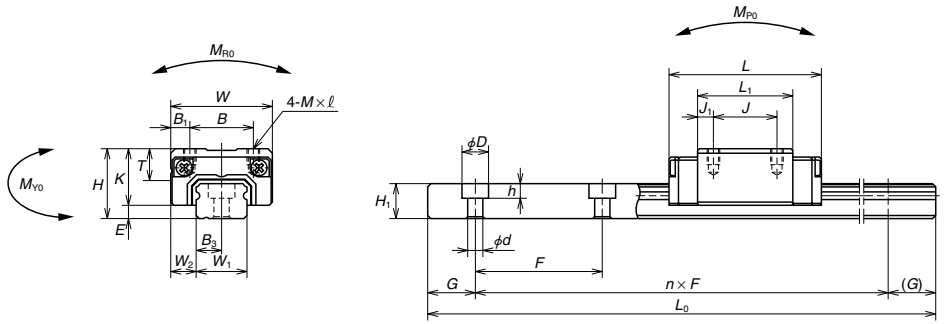

LH08AN, LH10AN

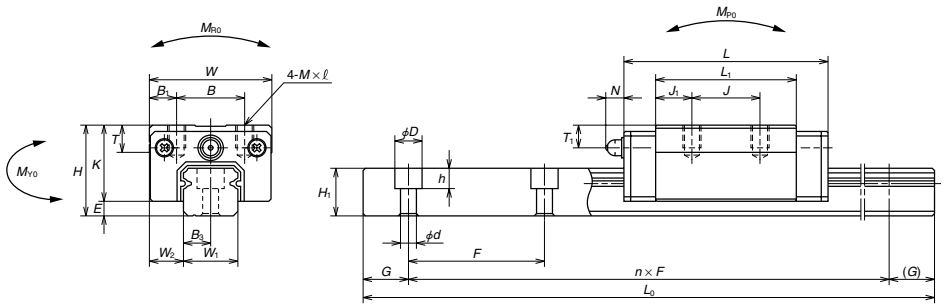

LH12AN

Table I-8·6

Unit: mm

Model No.	Assembly dimension			Ball slide dimension													Rail dimension							Basic load rating					Ball diameter	Weight	
	Height			Width	Length	Mounting hole								Grease fitting			Rail width	Rail height	Bolt pitch	Bolt hole		G	Maximum length	Dynamic	Static	Static moment (N · m)				Bearing	Rail
	H	E	W_2	W	L	B	J	$M \times$ Pitch $\times \ell$	B_1	L_1	J_1	K	T	Mounting hole	T_1	N	W_1	H_1	F	$d \times D \times h$	B_3	(std.)	L_{0max}	C(N)	C_0(N)	M_{RO}	M_{PO}	M_{YO}	D_W	(g)	(g/100mm)
LH08AN	11	2.1	4	16	24	10	10	M2 × 0.4 × 2.5	3	15	2.5	8.9	–	–	–	–	8	5.5	20	2.4 × 4.2 × 2.3	4	7.5	375	1 240	2 630	7.3	4.5	3.8	1.2000	13	31
LH10AN	13	2.4	5	20	31	13	12	M2.6 × 0.45 × 3	3.5	20.2	4.1	10.6	6	–	–	–	10	6.5	25	3.5 × 6 × 3.5	5	10	600	2 250	4 500	16	10	8.8	1.5875	26	44
LH12AN	20	3.2	7.5	27	45	15	15	M4 × 0.7 × 5	6	31	8	16.8	6	ϕ3	5	4	12	10.5	40	3.5 × 6 × 4.5	6	15	800	5 650	11 300	47	42	35	2.3812	82	88

Note : LH10 and LH12 are constructed with a ball retainer which prevents balls from falling out even if the bearing is taken out from the rail.

www.bergab.ru Берг АБ bergab@ya.ru Тел. (495)-228-06-21, факс (495) 223-3071

www.bergab.ru Берг АБ bergab@ya.ru Тел. (495)-228-06-21, факс (495) 223-3071

A-I-8.2 NSK Linear Guides HA Series

Unparalleled motion accuracy, rigidity, and load capacity—new HA Series Linear Guides open up new possibilities for machine tools.
The HA Series is a new member of NSK's linear guide product line, long respected for its outstanding accuracy and reliability. NSK's exclusive design achieves the highest level of motion accuracy. High rigidity and high load capacity have also been achieved, leading to significant improvement in machine tool quality.

(1) Features

●High motion accuracy

High motion accuracy is achieved in both narrow and wide ranges by adopting ultra-long ball slides and new design features.

●Vibration caused by ball passage reduced to

one-third of our conventional models
The ultra-long ball slides and new design have reduced the vibration caused by ball passage to one-third of our conventional models, contributing to improved straightness of the table (based on the accuracy measurement of narrow range motion, compared with our conventional models).

●High rigidity and load capacity with low friction

High rigidity, high load capacity, and low friction are achieved by increasing the number of balls.

●Dust proof seals

Dust-tight high performance end seals, bottom seals, and inner seals are built-in as standard features, facilitating long-term machining capability with high accuracy.

(2) Application

The series is most suitable for machining centers, high-precision lathes, and grinding machines due to its high motion accuracy. In addition, it is also suitable for discharge machines because of its low friction and high rigidity.

(3) Mechanism of the vibration caused by ball passage

By extending the effective ball slide length, NSK has minimized posture changes in ball slide due to the vibration caused by ball passage. In addition, the vibration has been substantially reduced by adopting an optimally designed crowning shape.

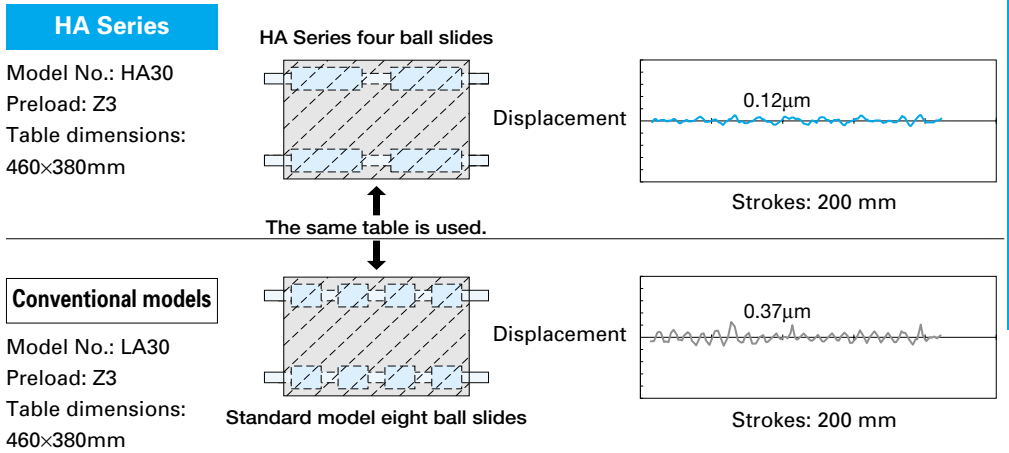

(4) High rigidity and load capacity with low friction

High rigidity and high load capacity are realized by a substantial increase in the number of balls.
For instance, compared with LA35, the HA30 features:

- the same dynamic load rating, while being one size smaller
- the same rigidity, while being two sizes smaller
- 120% higher rigidity with one-sixth friction of LA35

Fig. I-8 · 3. Comparisons of dynamic load rating of HA and LA Series

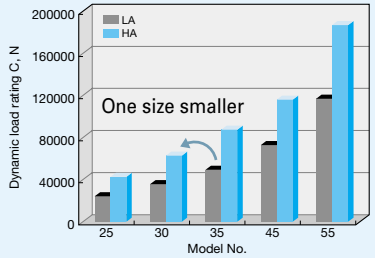

Fig. I-8 · 4. Comparisons of rigidity of HA and LA Series

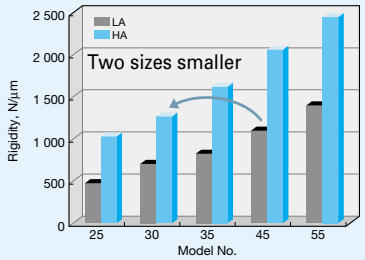

Fig. I-8 · 5. Comparisons of dynamic friction force and rigidity

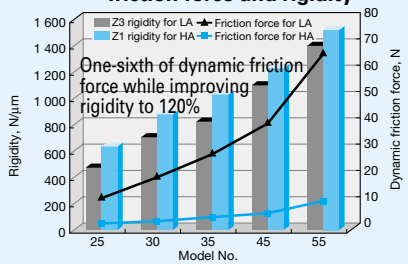

www.bergab.ru Берг АБ bergab@ya.ru Тел. (495)-228-06-21, факс (495) 223-3071

www.bergab.ru Берг АБ bergab@ya.ru Тел. (495)-228-06-21, факс (495) 223-3071

(5) High dust proofing capability

Dust-tight high performance end seals, bottom seals, and inner seals are built-in as standard features, as shown in Fig. I-8 · 6.
The design enables long-term machining capability with high accuracy.

Fig. I-8 · 6. View of linear guides with dust-proof seals

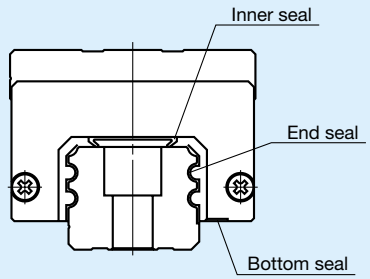

(6) Long-term, maintenance-free operation

The NSK K1 lubrication unit (optional) can be installed to ensure long-term, maintenance-free operation.

Pioneering in the industry
Super-finished ball groove feature
The super-finished ball groove with a super-precision
rolling groove is also available for even higher accuracy (optional).
(The super-finished ball groove can be applied for the ultra-high precision P3 grade.)

Table I-8 · 7. Dimension of linear guides equipped with NSK K1® lubrication unit

unit: mm

Model No.	Ball slide length equipped with two NSK K1 s L	Thickness of NSK K1, V1	Thickness of protection cover, V_2
HA25	159.8	5.0	1.0
HA30	190.2	5.5	1.0
HA35	216.6	5.5	1.0
HA45	248.4	6.5	1.0
HA55	299.4	6.5	1.0

•Ball slide length equipped with NSK K1=
(Standard bearing length)+(Thickness of NSK K1, V_1×Number of NSK K1)+
(Thickness of the protection cover V_2 ×2)

(7) Accuracy standard and preload

Four accuracy grades are available: ultra super precision P3, super precision P4, high precision P5, and precision P6. Slight preload Z1 and medium preload Z3 are available for preload, which can be selected for specific applications.

Table I-8 · 8. Accuracy standard

Unit: μm

Accuracy grade / Items	Ultra super precision P3	Super precision P4	High precision P5	Precision P6
Assembly height H Variation of assembly height H (All slides on a pair of rails)	±10 3	±10 5	±20 7	±40 15
Mounting width W_2 or W_3 Variation of mounting width W_2 or W_3 (All slides on datum rails)	±15 3	±15 7	±25 10	±50 20
Running parallelism of face C against face A Running parallelism of face D against face B	Refer to Table I-8 · 9, Fig. I-8 · 6 and Fig. I-8 · 7.			

Table I-8 · 9. Running parallelism tolerance

Unit: μm

Accuracy grade / Total rail length (mm)	P3	P4	P5	P6
Over~200 or less	2	2	4	6
200~250	2	2.5	5	7
250~315	2	2.5	5	8
315~400	2	3	6	9
400~500	2	3	6	10
500~630	2	3.5	7	12
630~800	2	4.5	8	14
800~1 000	2.5	5	9	16
1 000~1 250	3	6	10	17
1 250~1 600	4	7	11	19
1 600~2 000	4.5	8	13	21
2 000~2 500	—	10	15	22
2 500~3 150	—	11	17	25
3 150~4 000	—	16	23	30

Fig. I-8 · 6. Mounting width (W_2) and running parallelism

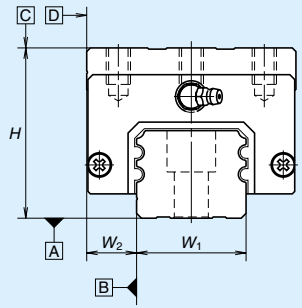

Fig. I-8 · 7. Mounting width (W_3) and running parallelism

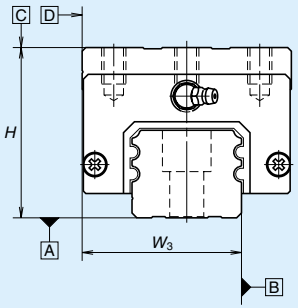

Table I-8 · 10. Preload and rigidity

unit: mm

Model No.	Preload (N)		Rigidity (N/μm)	
	Slight preload (Z1)	Medium preload (Z3)	Slight preload (Z1)	Medium preload (Z3)
HA25	735	2 990	635	1 030
HA30	1 030	4 400	880	1 270
HA35	1 470	6 100	1 030	1 620
HA45	1 960	8 150	1 230	2 060
HA55	3 150	13 100	1 520	2 450

www.bergab.ru Берг АБ bergab@ya.ru Тел. (495)-228-06-21, факс (495) 223-3071

www.bergab.ru Берг АБ bergab@ya.ru Тел. (495)-228-06-21, факс (495) 223-3071

(8) Dimensions of HA senies

AN Type
AL Type

Three types of HA Series linear guides are available: AN Type, AL Type, and EM Type, all of which can be selected for specific applications.

Example: : HA 30 0850 AN C 2 - ** P3 1 - Ⅱ

- **Series code**
- **Size No.**
- **Rail length, mm**
- **Ball slide shape code**
  AN: Square, AL: Low square, EM: Flange
- **Material and surface treatment code**
  C: Special high-carbon steel
- **Number of ball slides per rail**
- **Accuracy grade**
  P6: Precision P5: High precision
  P4: Super precision P3: Ultra super precision
- **Preload code**
  Z1: Slight preload
  Z3: Medium preload
- ***-Ⅱ: Two rails, No code: One rail**

* Please note that we assign the design number, and omit the last code (Ⅱ) that indicates a use of two rails as a set to finalize the reference number as product identification.

Three types of HA Series linear guides are available: AN Type, AL Type, and EM Type, all of which can be selected for specific applications.

Specification number

The specification number indicates the main specifications through numbers and codes. It is used until the final reference number (indicated in a specification drawing) is assigned upon confirming specifications with the user. The reference number consists of the specification number, the design serial number, and additional information.

Cautions

●Balls will fall out if a bearing is removed from the rail. A bearing may shift and fall out if the rail is tilted without using a stopper. ●Be sure to take appropriate safety measures against falling loads when mounting a bearing upside down (e.g., when using a bearing facing downward from a ceiling-mounted rail). ●Be sure that ambient temperature does not exceed 50°C (80°C, instantaneous) when installing NSK K1™. In addition, do not allow the unit to come into contact with degreasing organic solvents.

Fig. Ⅰ-8・8 AN Type

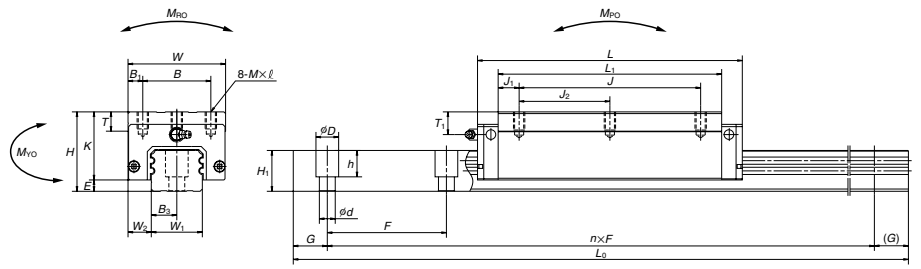

Fig. Ⅰ-8・9 AL Type

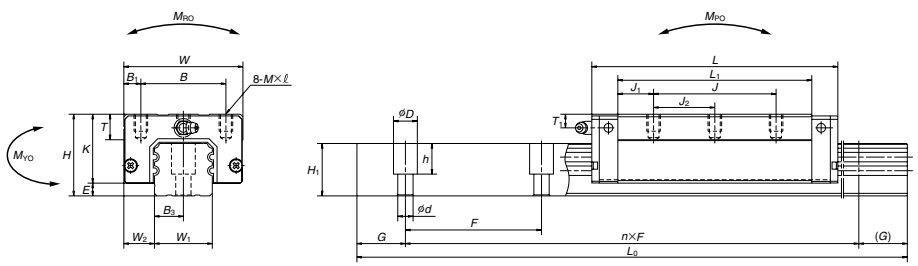

Table Ⅰ-8・10

unit: mm

Model No.	Assembly dimension			Ball slide dimension														Rail dimension									Basic load rating					Ball diameter	Weight	
	Height			Width	Length	Mounting hole									Grease fit			Rail width	Rail height	Bolt pitch	Bolt hole		G (recommended)	Maximum length	Dynamic	Static	Static moment (N·m)				Bearing	Rail
	H	E	W_2	W	L	B	J	J_2	M×pitch×ℓ	B_1	L_1	J_1	K	T	Mounting hole	T_1	N	W_1	H_1	F※	d×D×h※	B_3		L_{0max}	C(N)	C_0(N)	M_{RO}	M_{PO}	M_{YO}	D_W	(g)	(g/100mm)
HA25AN	40	5.5	12.5	48	147.8	35	100	50	M6×1×10	6.5	126	13	34.5	12	M6×0.75	10	11	23	22	30/60	7×11×16.5/9	11.5	20	3 960	54 000	115 000	670	2 060	2 060	3.968	1.2	3.7
HA30AN	45	7.5	16	60	177.2	40	120	60	M8×1.25×11	10	149	14.5	37.5	14	M6×0.75	9.5	11	28	28	40/80	9×14×23.5/12	14	20	4 000	79 500	166 000	1 140	3 550	3 550	4.762	1.8	5.8
HA35AN	55	7.5	18	70	203.6	50	140	70	M8×1.25×12	10	173	16.5	47.5	15	M6×0.75	15	11	34	30.8	40/80	9×14×23.5/12	17	20	4 000	111 000	226 000	1 950	5 650	5 650	5.556	3.0	7.7
HA35AL	48												40.5			8															2.6	
HA45AN	70	10	20.5	86	233.4	60	160	80	M10×1.5×16	13	197	18.5	60	17	Rc1/8	20	13	45	36	52.5/105	14×20×27/17	22.5	22.5	3 990	147 000	295 000	3 700	8 450	8 450	6.350	6.0	12.0
HA45AL	60															10															5.0	
HA55AN	80	12	23.5	100	284.4	75	206	103	M12×1.75×18	12.5	245	19.5	68	18	Rc1/8	21	13	53	43.2	60/120	16×23×32.5/20	26.5	30	3 960	232 000	445 000	6 500	15 400	15 400	7.937	9.4	17.2
HA55AL	70															11															7.8	

* Select either one of the dimensions for *F* and *h* (pitch of holes for rail fixing bolt).
(The left is for standard types, while the right is for semi-standard types.)

www.bergab.ru Берг АБ bergab@ya.ru Тел. (495)-228-06-21, факс (495) 223-3071

www.bergab.ru Берг АБ bergab@ya.ru Тел. (495)-228-06-21, факс (495) 223-3071

EM Type

Example: : HA 30 0850 AN C 2 - ** P3 1 - Ⅱ

- **Series code**
- **Size No.**
- **Rail length, mm**
- **Ball slide shape code**
  AN: Square, AL: Low square, EM: Flange
- **Material and surface treatment code**
  C: Special high-carbon steel
- **Number of ball slides per rail**
- **Accuracy grade**
  P6: Precision P5: High precision
  P4: Super precision P3: Ultra super precision
- **Preload code**
  Z1: Slight preload
  Z3: Medium preload
- ***-Ⅱ: Two rails,**
  No code: One rail

* Please note that we assign the design number, and omit the last code (Ⅱ) that indicates a use of two rails as a set to finalize the reference number as product identification.

●Mounting holes for ball slides of EM type are for both taps and drills.

Fig. Ⅰ-8・10 EM Type

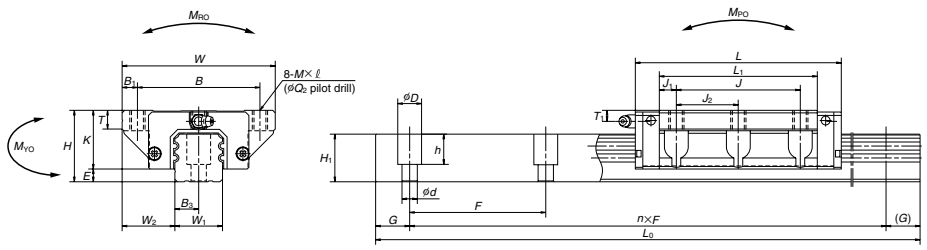

Table Ⅰ-8・10

unit: mm

Model No.	Assembly dimension Height H	E	W_2	Ball slide dimension Width W	Length L	Mounting hole B	J	J_2	M×pitch×ℓ	Q_2	B_1	L_1	J_1	K	T	Grease fitting Mounting hole	T_1	N
HA25EM	36	5.5	23.5	70	147.8	57	100	50	M8×1.25×10	6.8	6.5	126	13	30.5	11	M6×0.75	6	11
HA30EM	42	7.5	31	90	177.2	72	120	60	M10×1.5×12	8.6	9	149	14.5	34.5	11	M6×0.75	6.5	11
HA35EM	48	7.5	33	100	203.6	82	140	70	M10×1.5×13	8.6	9	173	16.5	40.5	12	M6×0.75	8	11
HA45EM	60	10	37.5	120	233.4	100	160	80	M12×1.75×15	10.5	10	197	18.5	50	13	Rc1/8	10	13
HA55EM	70	12	43.5	140	284.4	116	206	103	M14×2×21	12.5	12	245	19.5	58	15	Rc1/8	11	13

* Select either one of the dimensions for *F* and *h* (pitch of holes for rail fixing bolt).
(The left is for standard types, while the right is for semi-standard types.)

Rail dimension Rail width W_1	Rail height H_1	Bolt pitch F※	Bolt hole d×D×h※	B_3	G (recommended)	Maximum length L_{0max}	Basic load rating Dynamic C(N)	Static C_0(N)	Static moment (N·m) M_{RO}	M_{PO}	M_{YO}	Ball diameter D_W	Weight Bearing (kg)	Rail (kg/100mm)
23	22	30/60	7×11×16.5/9	11.5	20	3 960	54 000	115 000	670	2 060	2 060	3.968	1.6	3.7
28	28	40/80	9×14×21/12	14	20	4 000	79 500	166 000	1 140	3 550	3 550	4.762	2.6	5.8
34	30.8	40/80	9×14×23.5/12	17	20	4 000	111 000	226 000	1 950	5 650	5 650	5.556	3.8	7.7
45	36	52.5/105	14×20×27/17	22.5	22.5	3 990	147 000	295 000	3 700	8 450	8 450	6.350	6.6	12.0
53	43.2	60/120	16×23×32.5/20	26.5	30	3 960	232 000	445 000	6 500	15 400	15 400	7.937	11	17.2

Specification number

The specification number indicates the main specifications through numbers and codes. It is used until the final reference number (indicated in a specification drawing) is assigned upon confirming specifications with the user. The reference number consists of the specification number, the design serial number, and additional information.

Cautions

●Balls will fall out if a bearing is removed from the rail. A bearing may shift and fall out if the rail is tilted without using a stopper. ●Be sure to take appropriate safety measures against falling loads when mounting a bearing upside down (e.g., when using a bearing facing downward from a ceiling-mounted rail). ●Be sure that ambient temperature does not exceed 50°C (80°C, instantaneous) when installing NSK K1™. In addition, do not allow the unit to come into contact with degreasing organic solvents.

www.bergab.ru Берг АБ bergab@ya.ru Тел. (495)-228-06-21, факс (495) 223-3071

www.bergab.ru Берг АБ bergab@ya.ru Тел. (495)-228-06-21, факс (495) 223-3071

A-I-9 Guide to Technical Services

CAD drawing data

NSK offers CAD data for linear guides. Please downlode it from the homepage of NSK.
NSK homepage http://www.jp.nsk.com

- Data in drawings are filed in the actual size (some parts are simplified). You can use these data without processing.
- Drawings are three-views projection.
- Dimension lines are omitted to render the data as standard drawing for database.

Data offered by CAD

NSK linear guides

LH Series
LS Series
LA Series
LY Series
LW Series
LE Series
LU Series
RA Series
Translide

A-I-10 Linear Guide: Handling Precautions

NSK linear guides are high quality and are easy to use. NSK places importance on safety in design. For maximum safety, please follow precautions as outlined below.

(1) Lubrication

Confirm lubrication.

a. If your linear guide is rust prevention specification, thoroughly wipe the rust prevention oil, and put lubricant inside of ball slide before using.
b. If you are using oil as lubricant, the oil may not reach the ball groove depending on how the ball slide is installed. Consult NSK in such case.

(2) Handling

Handle with care.

Do not disassemble.

Do not drop.

Do not give impact.

a. Interchangeable ball slides (randomly matching types between rail and ball slide) are installed to the provisional rail when they leave the factory. Handle the ball slide with care during installation to the rail.
b. Do not disassemble the guide unless absolutely necessary. Not only does it allow dust to enter, but it lessens precision.
c. Ball slide may move by simply leaning the rail. Make sure that the ball slide does not disengage from the rail.
d. Standard end cap is made of plastic. Beating it or hitting it against an object may cause damage.

(3) Precautions in use

Do not contaminate.

Do not hang upside down.

Temperature limitation.

a. Make every effort not to allow dust and foreign objects to enter.
b. Please apply splash guard or bellows to the linear guide to prevent sticking resolvent or coolant when it contains corrosive material.
c. The temperature of the place where linear guides are used should not exceed 80°C (excluding heat-resistant type linear guides). A higher temperature may damage the plastic end cap.
d. If the user cuts the rail, thoroughly remove burrs and sharp edges on the cut surface.
e. When hanging upside-down (e.g. the rail is installed upside-down on the ceiling in which the ball slide faces downward), should the end cap be damaged, causing the balls to fall out, the ball slide may be detached from the rail and fall. For such use, take measures including installing a safety device.

(4) Storage

Store in the correct position.

a. Linear guide may bend if the rail is stored in inappropriate position. Place it on a suitable surface, and store it in a flat position.

www.bergab.ru Берг АБ bergab@ya.ru Тел. (495)-228-06-21, факс (495) 223-3071

www.bergab.ru Берг АБ bergab@ya.ru Тел. (495)-228-06-21, факс (495) 223-3071

A-Ⅱ Technical Description of NSK Linear Guides

A-Ⅱ-1 Accuracy

A-Ⅱ-1.1 Accuracy Standard

• Table Ⅱ-1•1, Figure Ⅱ-1•1 and Figure Ⅱ-1•2 show accuracy characteristics.

Table Ⅱ-1•1 Definition of accuracy

Characteristics	Definition (Figures Ⅱ-1•1, Ⅱ-1•2)
Mounting height *H*	Distance from A (rail bottom datum face) to C (ball slide top face)
Variation of *H*	Variation of *H* in ball slides assembled to the rails of a set of linear guide
Mounting width W_2 or W_3	Distance from B (rail side datum face) to D (ball slide side datum face). Applicable only to the reference linear guide.
Variation of W_2 or W_3	Difference of the width (W_2 or W_3) between the assembled ball slides which are installed in the same rail. Applicable only to the reference linear guide.
Running parallelism of ball slide, face C to face A	Variation of C (ball slide top face) to A (rail bottom datum face) when ball slide is moving.
Running parallelism of ball slide, face D to face B	Variation of D (ball slide side datum face) to B (rail side datum face) when a ball slide is moving.

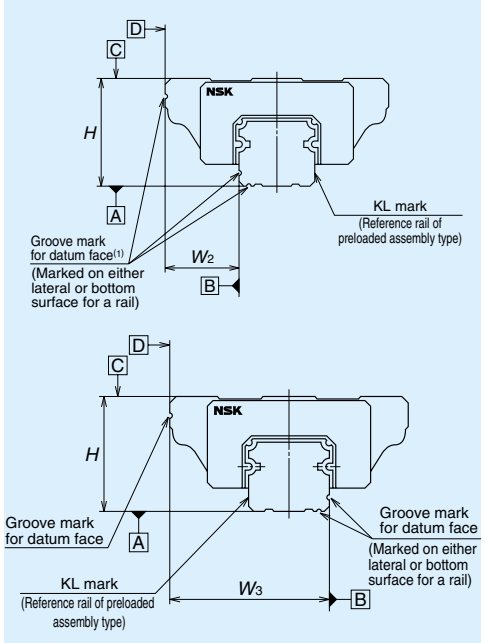

Fig. Ⅱ-1.1 Assembled accuracy (Height and width)

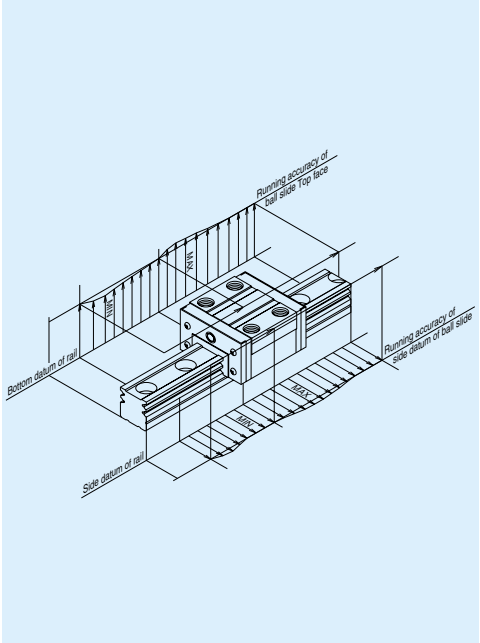

Fig. Ⅱ-1.2 Running parallelism of ball slide

Mounting width: W_2, W_3

• Mounting width differs depending on the arrangement of the datum faces of the rail and ball slide on the reference linear guide (indicated as KL on the rail). (Fig. Ⅱ-1•3 and Fig. Ⅱ-1•4)

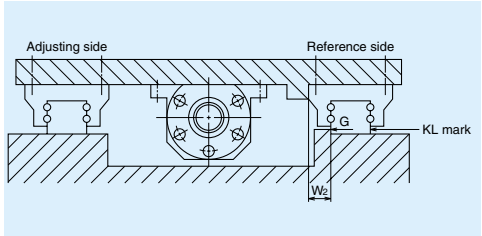

Fig. Ⅱ-1•3 Mounting width W_2

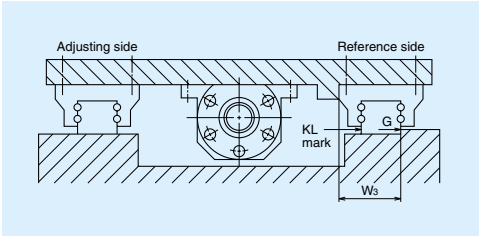

Fig. Ⅱ-1•4 Mounting width W_3

A-Ⅱ-1.2 Running Parallelism of Ball Slide

• Running parallelism of ball slide is common in all series. Specifications of all accuracy grades are shown in Table Ⅱ-1•2.

However, applicable accuracy grades differ by series. Please refer to "**Table Ⅰ-3.1 Accuracy grade and applicable series**" on page A22.

Table Ⅱ-1•2 Running parallelism of ball slide

Unit: μm

Rail over all length (mm) over / or less	Preloaded assembly (Non-interchangeable) Ultra precision P3	Super precision P4	High precision P5	Precision grade P6	Normal grade PN	Interchangeable type Normal grade PC
~50	2	2	2	4.5	6	6
50~80	2	2	3	5	6	6
80~125	2	2	3.5	5.5	6.5	6.5
125~200	2	2	4	6	7	7
200~250	2	2.5	5	7	8	8
250~315	2	2.5	5	8	9	9
315~400	2	3	6	9	11	11
400~500	2	3	6	10	12	12
500~630	2	3.5	7	12	14	14
630~800	2	4.5	8	14	16	16
800~1000	2.5	5	9	16	18	18
1000~1250	3	6	10	17	20	20
1250~1600	4	7	11	19	23	23
1600~2000	4.5	8	13	21	26	26
2000~2500	5	10	15	22	29	29
2500~3150	6	11	17	25	32	32
3150~4000	9	16	23	30	34	34

www.bergab.ru Берг АБ bergab@ya.ru Тел. (495)-228-06-21, факс (495) 223-3071

www.bergab.ru Берг АБ bergab@ya.ru Тел. (495)-228-06-21, факс (495) 223-3071

A-Ⅱ-1.3 Accuracy Standard in Each Series

LH, LS, LA, LY, LW Series

Table Ⅱ-1.3 shows accuracy standards of the preloaded assembly in LH, LS, LA, LY and LW Series. Table Ⅱ-1.4 shows accuracy standards of LH Series interchangeable type. Table Ⅱ-1•5 shows accuracy standards of LS and LW Series interchangeable type.

Table Ⅱ-1•3 Tolerance of preloaded assembly in LH, LS, LA, LY and LW Series Unit: μm

Characteristic \ Accuracy grade	Ultra precision P3	Super precision P4	High precision P5	Precision grade P6	Normal grade PN
Mounting height H Variation of H (all ball slides installed in rails for a set of linear guides)	±10 3	±10 5	±20 7	±40 15	±80 25
Mounting width W_2 or W_3 Variation of W_2 or W_3 (all ball slides on the reference linear guide)	±15 3	±15 7	±25 10	±50 20	±100 30
Running parallelism of ball slide, face C to face A Running parallelism of ball slide, face D to face B	Refer to Figure Ⅱ-1•1 and Table Ⅱ-1•2				

Table Ⅱ-1•4 Tolerance of LH Series interchangeable type: Normal grade PC Unit: μm

	Characteristics \ Model No.	LH15, 20, 25, 30, 35	LH45, 55, 65
Interchangeable type with clearance	Mounting height H	±20	±30
	Variation of mounting height H	15① 30②	20① 35②
	Mounting width W_2 or W_3	±30	±35
	Variation of mounting width W_2 or W_3	25	30
	Running parallelism of ball slide, face A to face C Running parallelism of ball slide, face B to face D	See Fig. Ⅱ-1·1 and Table Ⅱ-1•2.	
Interchangeable type with preload	Mounting height H	±20	±30
	Variation of mounting height H	15① 30②	20① 35②
	Mounting width W_2 or W_3	±30	±35
	Variation of mounting width W_2 or W_3	25	30
	Running parallelism of ball slide, face A to face C Running parallelism of ball slide, face B to face D	See Fig. Ⅱ-1·1 and Table Ⅱ-1•2.	

Table Ⅱ-1•5 Tolerance of LS and LW Series interchangeable type: Normal grade PC Unit: μm

Characteristics \ Model No.	LS15, 20, 25, 30, 35 LW17, 21, 27, 35, 50
Mounting height H	±20
Variation of mounting height H	15① 30②
Mounting width W2 or W3	±30
Variation of mounting width W_2 or W_3	25
Running parallelism of ball slide, face A to face C Running parallelism of ball slide, face B to face D	See Fig. Ⅱ-1•1 and Table Ⅱ-1•2.

Note:
① Variation on the same rail
② Variation on multiple rails

Indication of rail datum face in LH, LS, LA, LY and LW series.

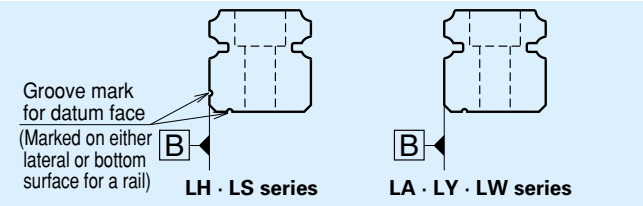

Fig. Ⅱ-1·5 For special high carbon steel (NSK standard material)

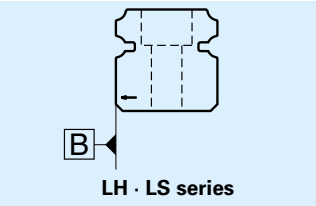

Fig. Ⅱ-1·6 For stainless steel

LE, LU Series

Table Ⅱ-1•6 shows tolerance of preloaded assembly in LE and LU Series. Table Ⅱ-1•7 shows tolerance of LE and LU Series interchangeable type.

Table Ⅱ-1•6 Tolerance of preloaded assembly in LE and LU Series Unit: μm

Characteristic \ Accuracy grade	Super precision P4	High precision P5	Precision grade P6	Normal grade PN
Mounting height H Variation of H (all ball slides installed in rails for a set of linear guides)	±10 5	±15 7	±20 15	±40 25
Mounting width W_2 or W_3 Variation of W_2 or W_3 (all ball slides on the reference linear guide)	±15 7	±20 10	±30 20	±50 30
Running parallelism of ball slide, face C to face A Running parallelism of ball slide, face D to face B	Refer to Table Ⅱ-1•2, Figure Ⅱ-1•7 and Figure Ⅱ-1•8			

Table Ⅱ-1•7 Tolerance of interchangeable type in LE and LU Series Normal grade (PC) Unit: μm

Characteristic \ Model No.	LU09, 12, 15 LE09, 12, 15
Mounting height H Variation of H	±20 40
Mounting width W_2 or W_3 Variation of width W_2 or W_3	±20 40
Running parallelism of ball slide, face C to face A Running parallelism of ball slide, face D to face B	Refer to Table Ⅰ-1•2, Fig. Ⅱ-1•7 and Fig. Ⅱ-1•8

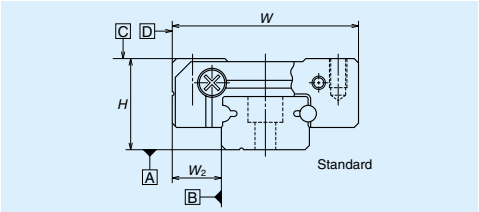

Fig. Ⅱ-1•7 Mounting width (W_2)

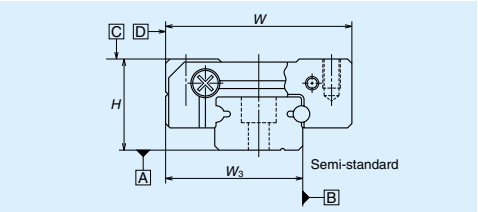

Fig. Ⅱ-1•8 Mounting width (W_3)

Table Ⅱ-1.8 Indication of rail datum face in LE and LU Series

Material \ Model No.	LU05, 07, 09 LE07, 09, 12	LU12, 15	LE05, 15 LE09,12 (with a ball retainer)
Special high carbon steel	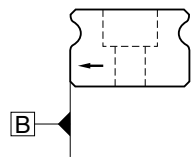	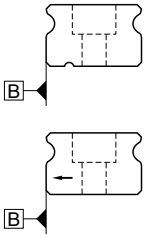	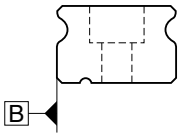
Stainless steel			

www.bergab.ru Берг АБ bergab@ya.ru Тел. (495)-228-06-21, факс (495) 223-3071

www.bergab.ru Берг АБ bergab@ya.ru Тел. (495)-228-06-21, факс (495) 223-3071

LL Series

Table Ⅱ-1•9 shows tolerance of LL Series.

Table Ⅱ-1•9 Tolerance of LL Series Normal grade (PN)

Unit: μm

Characteristic \ Model No.	LL15
Mounting height	±20
Running parallelism, face C to face A Running parallelism, face D to face B	20 (See Fig. Ⅱ-1•9)

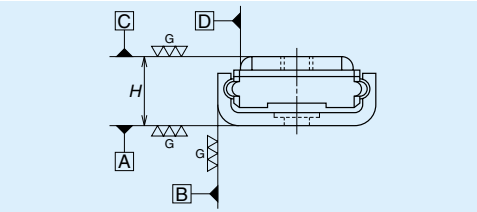

Fig. Ⅱ-1•9 Standard LL

A-Ⅱ-2 Preload and Rigidity

A-Ⅱ-2.1 Preload and rigidity

- In NSK linear guides, slight size changes of balls, which are going to be inserted in the ball slide, controls clearance and amount of preload.
- In NSK linear guide, rigidity is further increased and elastic deformation is reduced by applying preload.
- In general, a load range in which the preload is effective becomes about 2.8 times of the preload (Fig. Ⅱ-2•1).
- Fig. Ⅱ-2•2 shows the relationship of ball slide deformation by external vertical load and preload. LY35 is used as a case.
- The following show the definition of linear guide rigidity.

1) Radial rigidity: Rigidity of vertical and lateral directions -- up/down and right/left (Fig. Ⅱ-2•3).
2) Moment rigidity: Three moment directions -- pitching, rolling, and yawing (Fig. Ⅱ-2•4).

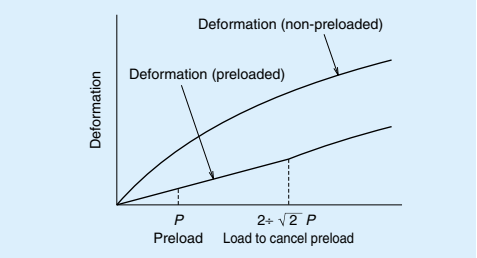

Fig. Ⅱ-2•1 Elastic deformation

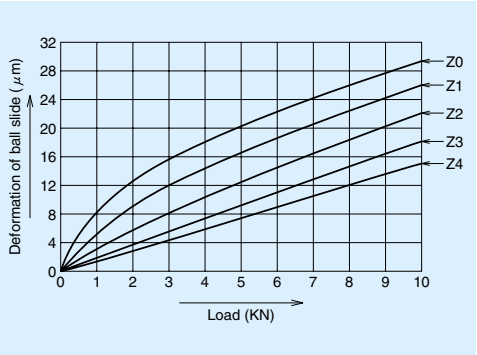

Fig. Ⅱ-2•2 Rigidity of LY35, downward direction load (example)

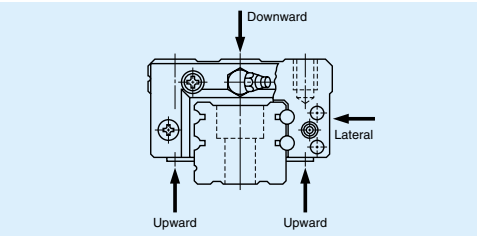

Fig. Ⅱ-2•3 Radial rigidity

- Since two rails and four ball slides are used in general as a pair, considering only the radial rigidity is sufficient.

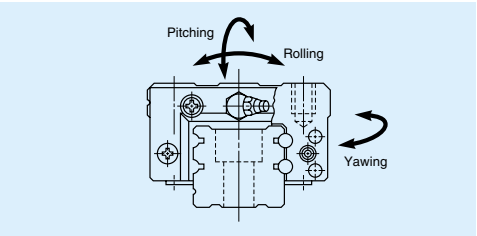

Fig. Ⅱ-2•4 Moment rigidity

- However, in cases as shown in Fig. Ⅱ-2•5, Fig. Ⅱ-2•6 and Fig. Ⅱ-2•7, it is necessary to take into account the moment rigidity in addition to the radial rigidity.

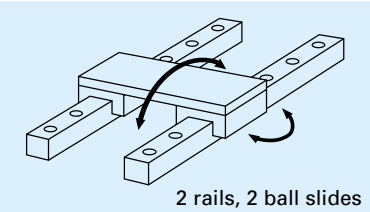

Fig. Ⅱ-2•5 Pitching and yawing direction

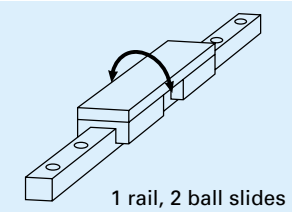

Fig. Ⅱ-2•6 Rolling direction

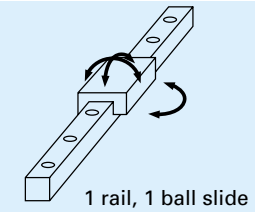

Fig. Ⅱ-2•7 All directions

A-Ⅱ-2.2 Preload and Rigidity of Each Series

LH Series (Preloaded assembly)

Table Ⅱ-2•1 shows preload and rigidity of preloaded assembly of LH Series.

Table Ⅱ-2•1 Preload and rigidity of preloaded assembly of LH Series

	Model No.	Preload (N)		Rigidity (N/μm)			
				Vertical directions		Lateral direction	
		Slight preload Z1	Medium preload Z3	Slight preload Z1	Medium preload Z3	Slight preload Z1	Medium preload Z3
High load type	LH15 AN,EL,FL,EM	78	490	137	226	98	186
	LH20 AN,EL,FL,EM	147	835	186	335	137	245
	LH25 AN,EL,FL,EM	196	1270	206	380	147	284
	LH30 AN,AL	245	1570	216	400	157	294
	LH30 EL,FL	294	1770	265	480	186	355
	LH35 AL,AN,EL,FL,EM	390	2350	305	560	216	390
	LH45 AN,EL,FL,EM	635	3900	400	745	284	540
	LH55 AN,EL,FL,EM	980	5900	490	910	345	645
	LH65 AN,EL,FL,EM	1470	8900	580	1070	400	755
Super high load type	LH15 BN,GL,HL,GM	98	685	196	345	137	284
	LH20 BN,GL,HL,GM	196	1080	265	480	196	355
	LH25 BL,BN,GL,HL,GM	245	1570	294	560	216	400
	LH30 BL,BN,GL,HL,GM	390	2260	360	665	265	480
	LH35 BL,BN,GL,HL,GM	490	2940	430	795	305	570
	LH45 BN,GL,HL,GM	785	4800	520	960	370	695
	LH55 BN,GL,HL,GM	1180	7050	635	1170	440	835
	LH65 BN,GL,HL,GM	1860	11300	805	1480	550	1040
	LH85 BN,GL,HL	2840	16800	1020	1870	695	1300

Clearance for fine clearance Z0 is 0 ~ 3μm. Therefore, preload is zero.
However, Z0 of PN Grade is 0 ~ 15μm.

www.bergab.ru Берг АБ bergab@ya.ru Тел. (495)-228-06-21, факс (495) 223-3071

www.bergab.ru Берг АБ bergab@ya.ru Тел. (495)-228-06-21, факс (495) 223-3071

LH Series (Interchangeable type)

Table Ⅱ-2•2 shows clearance and preload of interchangeable in LH Series.

Table Ⅱ-2•2 Clearance and preload of interchangeable type in LH Series Unit: μm

Model No.	Fine clearance	Slight preload
	ZT	ZZ
LH15	–4～15	–4～0
LH20	–5～15	–5～0
LH25		–5～0
LH30		–7～0
LH35		–7～0
LH45		–7～0
LH55		–9～0
LH65		–9～0

Minus sign denotes that a value is an amount of preload (elastic deformation of balls).

LS Series (Preloaded assembly)

Table Ⅱ-2•3 shows preload and rigidity o of LS Series.

Table Ⅱ-2•3 Preload and rigidity of preloaded assembly in LS Series

	Model No.	Preload (N)		Rigidity (N/μm)			
				Vertical directions		Lateral direction	
		Slight preload Z1	Medium preload Z3	Slight preload Z1	Medium preload Z3	Slight preload Z1	Medium preload Z3
High load type	LS15 AL,EL,FL,EM	69	390	127	226	88	167
	LS20 AL,EL,FL,EM	88	540	147	284	108	206
	LS25 AL,EL,FL,EM	147	880	206	370	147	275
	LS30 AL,EL,FL,EM	245	1370	255	460	186	345
	LS35 AL,EL,FL,EM	345	1960	305	550	216	400
Medium load type	LS15 CL,JL,KL,JM	49	294	78	147	59	108
	LS20 CL,JL,KL,JM	69	390	108	186	78	137
	LS25 CL,JL,KL,JM	98	635	127	235	88	177
	LS30 CL,JL,KL,JM	147	980	147	275	108	206
	LS35 CL,JL,KL,JM	245	1370	186	335	137	245

Clearance for fine clearance Z0 is 0 ~3μm. Therefore, preload is zero.
However, Z0 of PN grade is 0 ~15μm.

LS Series (Interchangeable type)

Table Ⅱ-2•4 shows clearance of interchangeable type of LS Series.

Table Ⅱ-2•4 Preload and clearance of interchangeable type of LS Series Unit: μm

Model No.	Fine clearance	Slight preload
	ZT	ZZ
LS15	–4～15	–4～0
LS20	–4～15	–4～0
LS25	–5～15	–5～0
LS30	–5～15	–5～0
LS35	–5～15	–6～0

Minus sign denotes that a value is an amount of preload (elastic deformation of balls).

LA Series

Table Ⅱ-2•5 shows preload and rigidity of LA Series.
LA Series has two types of preload Z3 (medium preload) and Z4 (heavy preload).

Table Ⅱ-2•5 Preload and rigidity of LA Series

	Model No.	Preload (N)		Rigidity (N/μm)	
		Medium preload Z3	Heavy preload Z4	Medium preload Z3	Heavy preload Z4
High load type	LA25 AL, AN, EL, FL	1670	2110	475	550
	LA30 AL, AN, EL, FL	2450	3140	705	835
	LA35 AL, AN, EL, FL	3450	4300	825	970
	LA45 AL, AN, EL, FL	5050	6350	1100	1240
	LA55 AL, AN, EL, FL	8100	10200	1400	1540
	LA65 AN, EL, FL	13800	18800	1730	2030
Super high load type	LA25 BL, BN, GL, HL	2260	2840	700	820
	LA30 BL, BN, GL, HL	3250	4050	1000	1180
	LA35 BL, BN, GL, HL	4450	5650	1200	1400
	LA45 BL, BN, GL, HL	6150	7750	1450	1640
	LA55 BL, BN, GL, HL	9550	12100	1840	2020
	LA65 BN, GL, HL	18000	24400	2450	2840

www.bergab.ru Берг АБ bergab@ya.ru Тел. (495)-228-06-21, факс (495) 223-3071

www.bergab.ru Берг АБ bergab@ya.ru Тел. (495)-228-06-21, факс (495) 223-3071

LY Series

Table Ⅱ-2•6 shows preload and rigidity of LY Series.

Table Ⅱ-2•6 Preload and rigidity of LY Series

	Model No.	Preload (N)				Rigidity (N/μm)			
		Slight preload Z1	Light preload Z2	Medium preload Z3	Heavy preload Z4	Slight preload Z1	Light preload Z2	Medium preload Z3	Heavy preload Z4
High load type	LY15 AL,AN,EL,FL	59	147	294	–	98	137	167	–
	LY20 AL, EL,FL	98	245	490	–	127	167	216	–
	LY25 AL,AN,EL,FL	147	440	835	1180	167	284	390	460
	LY30 AL,AN,EL,FL	245	635	1270	1770	196	325	480	580
	LY35 AL,AN,EL,FL	345	880	1770	2450	245	360	580	655
	LY45 AL,AN,EL,FL	490	1270	2550	3600	315	500	735	860
	LY55 AL,AN,EL,FL	785	1960	3900	5600	370	600	880	1020
	LY65 AN,EL,FL	1670	4200	8450	11800	560	910	1340	1560
Super high load type	LY20 BL, GL,HL	98	294	590	–	147	216	275	–
	LY25 BL,BN,GL,HL	196	540	1080	1570	226	360	540	645
	LY30 BL,BN,GL,HL	294	785	1570	2160	245	400	610	695
	LY35 BL,BN,GL,HL	440	1080	2160	2940	305	450	685	805
	LY45 BL,BN,GL,HL	635	1570	3150	4400	400	625	940	1100
	LY55 BL,BN,GL,HL	980	2450	5000	6950	470	755	1140	1340
	LY65 BN,GL,HL	2260	5600	11300	15700	805	1280	1920	2230

Clearance for fine clearance Z0 is 0 ~ 3μm. Therefore, preload is zero.
However, Z0 of PN Grade is 8 ~ 18μm.

LW Series (Preloaded assembly)

Table Ⅱ-2•7 shows preload and rigidity of preloaded assembly of LW Series.
Rigidities are for the median of the preload range.

Table Ⅱ-2•7 Preload and rigidity of LW Series

Model No.	Preload (N)		Rigidity(N/μm)			
			Vertical directions		Lateral direction	
	Slight preload Z1	Medium preload Z3	Slight preload Z1	Medium preload Z3	Slight preload Z1	Medium preload Z3
LW17 EL	0～245	–	156	–	112	–
LW21 EL	0～294	–	181	–	130	–
LW27 EL	0～390	–	226	–	167	–
LW35 EL	0～490	785	295	440	213	315
LW50 EL	0～590	1470	345	600	246	425

Clearance of fine clearance Z0 is 0 ~3μm. Therefore, preload is zero.
However, Z0 of PN Grade is 0 ~15μm.

LW Series (Interchangeable type)

Clearance and preload of LW Series interchangeable type are shown in Table Ⅱ-2•8.

Table Ⅱ-2•8 Preload and clearance of interchangeable type of LW Series

Unit: μm

Model No.	Fine clearance	Slight preload
	ZT	ZZ
LW17	–3～15	–3.5～0
LW21	–3～15	–3.5～0
LW27	–4～15	–4～0
LW35	–5～15	–5～0
LW50	–5～15	–7～0

Minus sign denotes that a value is an amount of preload (elastic deformation of balls).

www.bergab.ru Берг АБ bergab@ya.ru Тел. (495)-228-06-21, факс (495) 223-3071

www.bergab.ru Берг АБ bergab@ya.ru Тел. (495)-228-06-21, факс (495) 223-3071

LE Series (Preloaded assembly)

Table Ⅱ-2•9 shows preload and rigidity of preloaded assembly of LE Series. Rigidities are for the median of the preload range.

Table Ⅱ-2•9 Preload and rigidity of LE Series

	Model No.	Preload (N)	Rigidity (N/μm)
		Slight preload Z1	Slight preload Z1
High load type	LE05 AL	0～23	36
	LE07 TL	0～29	46
	LE09 AL,TL LE09 AR,TR	0～37	61
	LE12 AL LE12 AR	0～40	63
	LE15 AL,AR	0～49	66
Medium load type	LE05 CL	0～18	29
	LE07 SL	0～16	28
	LE09 CL,SL	0～21	33
	LE12 CL	0～23	36
	LE15 CL	0～29	44
Super high load type	LE07 UL	0～43	71
	LE09 BL,UL	0～54	86
	LE12 BL	0～59	97
	LE15 BL	0～75	114

Clearance of fine clearance Z0 is 0 ~3μm. Therefore, preload is zero.
However, Z0 of PN grade is 3 ~10μm.

LE Series (Interchangeable type)

Table Ⅱ-2•10 shows clearance of interchangeable type of LE Series.

Table Ⅱ-2•10 Clearance of interchangeable type of LE Series

Unit: μm

Model No.	Fine clearance
	ZT
LE09	0～15
LE12	
LE15	

LU Series (Preloaded assembly)

Table Ⅱ-2•11 shows preload and rigidity of preloaded assembly of LU Series.
Rigidities are for the median of the preload range.

Table Ⅱ-2•11 Preload and rigidity of LU Series

	Model No.	Preload (N)	Rigidity (N/μm)
		Slight preload Z1	Slight preload Z1
High load type	LU05 TL	0～3	15
	LU07 AL	0～8	22
	LU09 AL,TL	0～12	26
	LU09 AR,TR	0～10	30
	LU12 AL,TL	0～17	33
	LU12 AR,TR	0～17	33
	LU15 AL	0～33	45
Super high load type	LU09 BL,UL	0～17	43
	LU12 BL,UL	0～25	52
	LU15 BL	0～51	75

Clearance of fine clearance Z0 is 0 ~3μm. Therefore, preload is zero.
However, Z0 of PN grade is 3 ~10μm.

LU Series (Interchangeable type)

Table Ⅱ-2•12 shows clearance of interchangeable type of LU Series

Table Ⅱ-2•12 Clearance of interchangeable type of LU Series

Unit: μm

Model No.	Fine clearance
	ZT
LU09	0～15
LU12	
LU15	

LL Series

Table Ⅱ-2•13 shows clearance of LL Series

Table Ⅱ-2•13 Radial clearance

Unit: μm

Model No.	Clearance
LL15	0～10

www.bergab.ru Берг АБ bergab@ya.ru Тел. (495)-228-06-21, факс (495) 223-3071

www.bergab.ru Берг АБ bergab@ya.ru Тел. (495)-228-06-21, факс (495) 223-3071

A-Ⅱ-3 Rating Life

A-Ⅱ-2.3 Calculating Friction Force by Preload

- Dynamic friction force per one ball slide of the linear guide can be calculated from preload vlue.
- The followings is a simple calculation to obtain the criterion of dynamic friction force.

For slight preload ZZ of interchangeable type with preload , use preload volume of slight preload Z1 of preloaded assembly.

$F = iP$

F: Dynamic friction force(N)
P: Preload (N)
i: Contact coefficient

Use the following contact coefficient values (i).
LH/LS, LW Series : 0.004
LA, HA Series : 0.010
LY, LE, LU Series : 0.026

- The starting friction force when the ball slide begins to move depends on lubrication condition. Roughly estimate it at 1.5 to 2 times of the dynamic friction obtained by the above method.

Calculation example

In case of LH35AN - Z3
$i = 0.004$
$P = 2350$ (N) (from Table Ⅱ-2•1)
$F = iP$
$= 0.004 \times 2350 = 9.4$ (N)

Therefore, the criteria of the dynamic friction force of LH35AN - Z3 is 9.4 N.

For seal friction, refer to "**A-Ⅱ-5 Dust Proof of Linear Guide.**"

A-Ⅱ-3.1 Rating Life and Basic Load Rating

(1) Life

Although used in appropriate conditions, the linear guide deteriorates after a certain period of operation, and eventually becomes unusable. In broad definition, the period until the linear guide becomes unusable is called "life." There are "fatigue life " caused by flaking, and "life of accuracy deterioration" which is caused by wear.

(2) Rating fatigue life

When the linear guide runs under load, the balls and the rolling contact surface of the grooves are exposed to repetitive load. This brings about fatigue to the material, and generates flaking. Flaking is scale-like damage to the surface of the ball groove.

Total running distance until first appearance of flaking is called "fatigue life." This is "life" in the narrow sense. Fatigue life varies significantly even in linear guides produced in the same lot, and even when they are operated under the same conditions. This is attributable to the inherent variation of the fatigue of the material itself.

"Rating fatigue life" is the total running distance which allows 90% of the group of linear guides of the same reference number to run without causing flaking when they are independently run under the same conditions. Rating fatigue life is sometimes indicated by total operating hours when the linear guides run at a certain speed.

(3) Revised basic load ratings in compliance with ISO standard

NSK has revised the basic load ratings in compliance with ISO.

The basic load ratings as listed in this catalog comply with the following ISO standards.

- Basic dynamic load rating : ISO/FDIS 14728-1
- Basic static load rating : ISO/FDIS 14728-2

(4) Basic dynamic load rating

- Basic dynamic load rating, which indicates load carrying capacity of the linear guide, is a load whose direction and volume do not change, and which furnishes 50 km of rating fatigue life.
- In case of linear guide, it is a constant load applied to downward direction to the center of the ball slide.
- Value of basic dynamic load rating C is shown in "**Selection Guide to Linear Guides A-Ⅰ-5 Model Number and Dimension Table.**"
- NSK defines the basic dynamic load rating as the load that furnishes 50 km of rated fatigue life. However some linear guide manufacturers in Europe and the United States define the load for the basic fatigue life of 100 km as the basic dynamic load ratings.

- The following formula may be used to convert the basic dynamic load rating C_{50} the dynamic load rating for 100 km rated fatigue life.

For balls as rolling element : $C_{100}=C/1.26$ (N)
For rollers as rolling element : $C_{100}=C/1.23$ (N)

(5) Calculation of rating fatigue life

- In general, rating fatigue life "L" can be calculated from basic dynamic load rating "C" and the load "F" to ball slide using the following formula.

For balls as rolling element $L=50\times\left[\frac{C}{F}\right]^{3}$

For rollers as rolling element $L=50\times\left[\frac{C}{F}\right]^{\frac{10}{3}}$

L: Rating fatigue life (km)
C: Basic dynamic load rating (N) (50km)
F: Load to a ball slide (N)
(dynamic equivalent load)

- The rating fatigue life L for 100 km can be obtained from the following formulas using the dynamic load rating C_{100}..

For balls as rolling element : $L=100\times\left[\frac{C_{100}}{F}\right]^{3}$

For rollers as rolling element : $L=100\times\left[\frac{C_{100}}{F}\right]^{\frac{10}{3}}$

L : Rating fatigue life(km)
C_{100} : Dynamic load rating for 100 km (N)
F : Load to ball slide(dynamic equivalent load) (N)

(6) Dynamic equivalent load

- Load applied to the linear guide (ball slide load) comes from various directions up/down and right/left directions and/or as moment load. Sometimes more than one type of load is applied simultaneously. Sometimes volume and direction of the load may change.

Varying load cannot be used as it is to calculate life of linear guide. Therefore, it is necessary to use a hypothetical load to ball slide with a constant volume which would generate a value equivalent to an actual fatigue life. This is called "dynamic equivalent load." For actual calculation, refer to "**A-Ⅱ-3.2 (4) How to calculate dynamic equivalent load.**"

(7) Basic static load rating

- When an excessive load or a momentary large impact is applied to the linear guide, local permanent deformation takes place to the balls and to the rolling contact surface. After exceeding a certain level, the deformation hampers smooth linear guide operation.
- Basic static load rating is a static load when: [Permanent deformation of the balls] + [permanent deformation of the rolling contact surfaces] becomes approximately 0.0001 times of the ball diameter.
- In case of linear guide, it is a load which is applied downward direction to the center of the ball slide.
- Values of basic static load rating C_0 are shown in "**Selection Guide to Linear Guide A-Ⅰ-5 Model Number and Dimension Table.**"
- In compliance with ISO 14728-2 standard for the basic static load rating, we have revised the C_0 of the NSK linear guides, which are approximately 1.0 to 1.5 times higher than conventional values.

www.bergab.ru Берг АБ bergab@ya.ru Тел. (495)-228-06-21, факс (495) 223-3071

www.bergab.ru Берг АБ bergab@ya.ru Тел. (495)-228-06-21, факс (495) 223-3071

(8) Basic static moment load rating

- Generally, NSK linear guide uses a set of two rails and four ball slides for the guide way of one axis. Under some operating condition, static moment load should be taken into account.

"M0," which is the limit of static moment load in such use is shown in **"Selection Guide to Linear Guide A-Ⅰ-5 Model Number and Dimension Table."**

(9) Basic load rating by load direction

- The basic load rating is considered to be a downward load to the ball slide and is indicated in the dimension tables as the dynamic load rating C and the static load rating C_0 respectively. However, the load may be applied to a ball slide in upward or lateral directions in actual use. In such a case the basic load rating shall be compensated as shown in Table Ⅱ-3•1. The basic dynamic load rating of the LY Series is the same in C and C_0 for all load directions, up, down and lateral, while the LH Series has different basic load ratings by the load direction as shown in the table.

Table Ⅱ-3•1 Basic load ratings by load direction

Load rating / Load direction / Series	Basic dynamic load rating			Basic static load rating		
	Downward	Upward	Lateral	Downward	Upward	Lateral
LH、LS、LW	C	C	$0.84C$	C_0	$0.78C_0$	$0.65C_0$
LA、HA、LY、LE、LU、LL	C	C	C	C_0	C_0	C_0

A-Ⅱ-3.2 How to Calculate Life

(1) Flow chart to calculate life

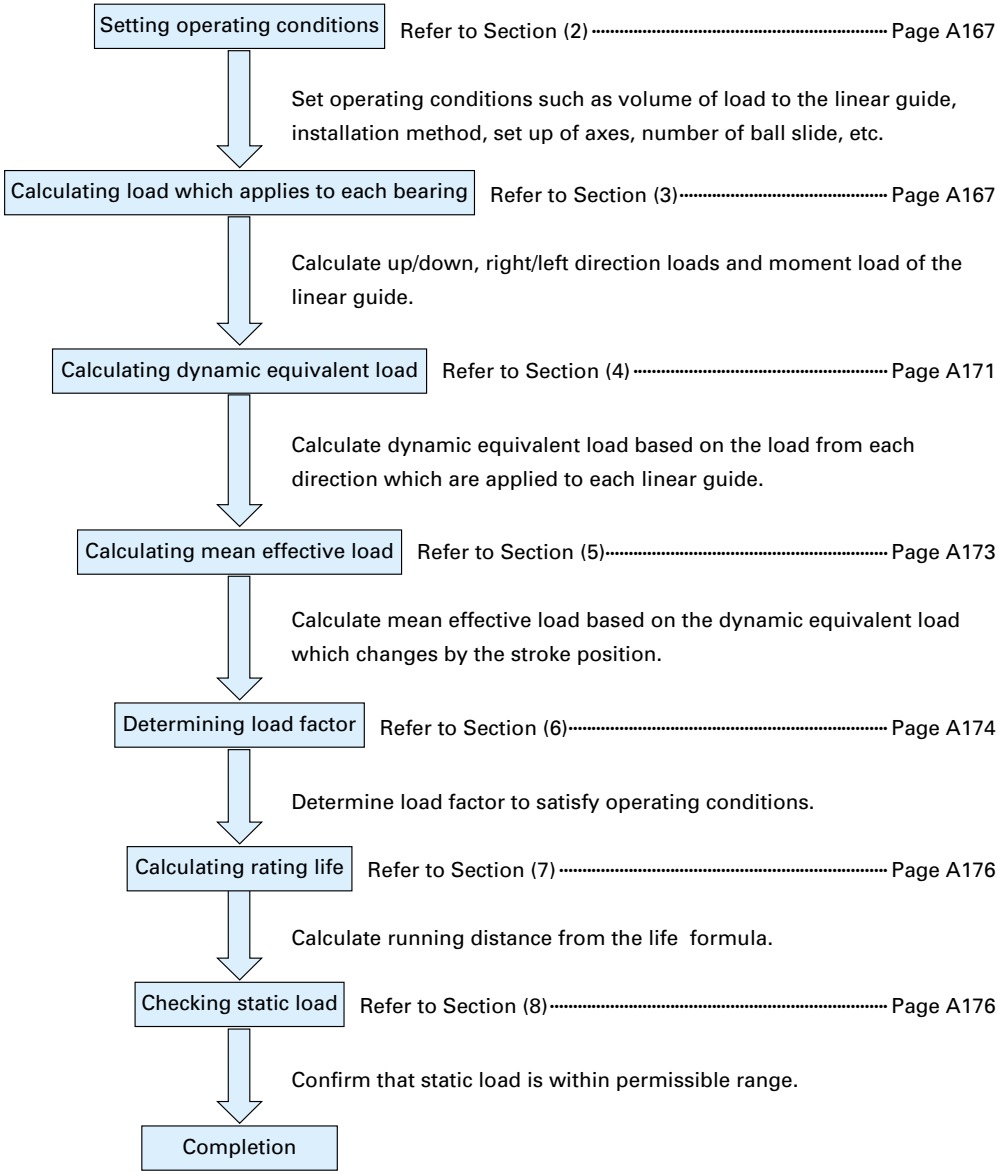

www.bergab.ru Берг АБ bergab@ya.ru Тел. (495)-228-06-21, факс (495) 223-3071

www.bergab.ru Берг АБ bergab@ya.ru Тел. (495)-228-06-21, факс (495) 223-3071

(2) Setting operating condition of linear guide

- First, set operating conditions to determine whether the temporarily selected model satisfies the required life.
- Major operating conditions are as follows. Set all values to calculate applied loads to each ball slide (Refer to Table Ⅱ-3•2).

Axis set up	: Horizontal, vertical
Rail combination	: Single rail, multiple rail
Applying loads	: F_x, F_y and F_z (N)
Ball slide span	: l (mm)
Rail span	: L (mm)
Position of load action point	: X, Y, Z (mm)
Center of driving mechanism	: X_b, Y_b, Z_b (mm)
Operating speed	: V (mm/sec)
Time in acceleration	: t (sec)
Operating frequency (duty cycle)	

(3) Calculating load to a ball slide

- Table Ⅱ-3•2 shows a formula to calculate loads that are going to be applied to each assembled ball slide into a machine.
  The Table shows six typical patterns of linear guide installing structure.
- In the Tables, directions indicated by arrows denote "plus" for the applied loads (F_x, F_y, F_z) and the loads which is applied to the ball slide. (F_r, F_s, M_r, M_p, M_y).
- Codes in the Tables are as follows:

F_r : Vertical loads to the ball slide (N)
F_s : Lateral loads to the ball slide (N)
M_r : Rolling moment to the ball slide (N · mm)
M_p : Pitching moment to the ball slide (N · mm)
M_y : Yawing moment to the ball slide (N · mm)
Suffixes (1, 2, ...) to the above F_r ~ M_y : Ball slide number
F_{xi} : Load applied in X direction (i = 1~n; n is the number of loads applied in X direction) (N)
F_{yj} : Load applied in Y direction (j = 1~n; n is the number of loads applied in Y direction) (N)
F_{zk} : Load applied in Z direction (k = 1~n; n is the number of loads applied in Z direction) (N)
Coordinates (X_{xi}, Y_{xi}, Z_{xi}): Point where load F_{xi} (mm) is applied.
Coordinates (X_{yj}, Y_{yj}, Z_{yj}): Point where load F_{yj} (mm) is applied.
Coordinates (X_{zk}, Y_{zk}, Z_{zk}): Point where load F_{zk} (mm) is applied.
l: Ball slide span (mm)
L: Rail span (mm)
Coordinates (X_b, Y_b, Z_b): Center of driving mechanism

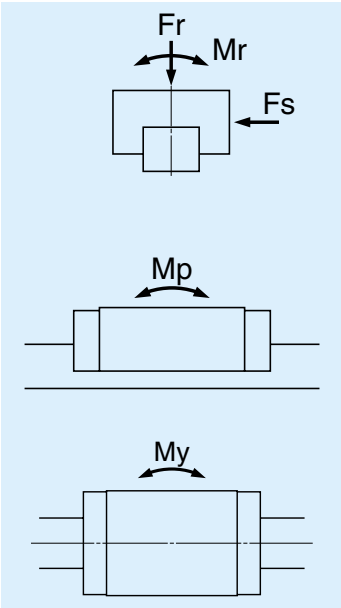

Fig. Ⅱ-3•1

Table Ⅱ-3•2 Loads applied to the ball slides

Pattern	Arrangement of ball slides	Load to ball slide and deformation at Point A
1	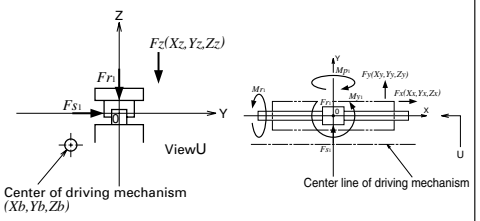	$Fr_1=\sum_{k=1}^{n}Fz_k \quad , \quad Fs_1=\sum_{j=1}^{n}Fy_j$ $Mr_1=\sum_{j=1}^{n}(Fyj\cdot Zyj)+\sum_{k=1}^{n}(Fzk\cdot Yzk)$ $Mp_1=\sum_{i=1}^{n}\{Fxi\cdot(Zxi-Zb)\}+\sum_{k=1}^{n}(Fzk\cdot Xzk)$ $My_1=-\sum_{i=1}^{n}\{Fxi\cdot(Yxi-Yb)\}+\sum_{j=1}^{n}(Fyj\cdot Xyj)$
2	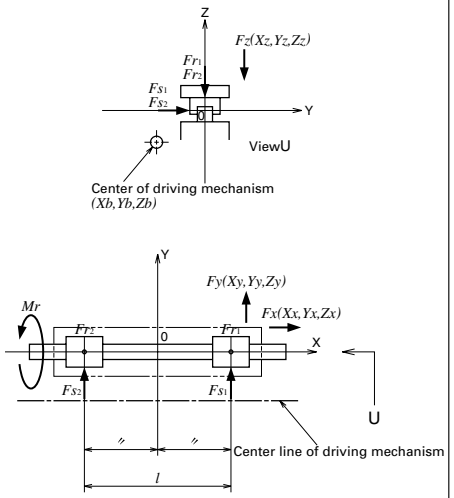	$Fr_1=\frac{\sum_{k=1}^{n}Fz_k}{2}+\frac{M2}{l} \quad , \quad Fr_2=\frac{\sum_{k=1}^{n}Fz_k}{2}-\frac{M2}{l}$ $Fs_1=\frac{\sum_{j=1}^{n}Fy_j}{2}+\frac{M3}{l} \quad , \quad Fs_2=\frac{\sum_{j=1}^{n}Fy_j}{2}-\frac{M3}{l}$ $Mr_1=\frac{M1}{2} \quad , \quad Mr_2=\frac{M1}{2}$ $M1=\sum_{j=1}^{n}(Fy_j\cdot Zy_j)+\sum_{k=1}^{n}(Fz_k\cdot Yz_k)$ $M2=\sum_{i=1}^{n}\{Fx_i\cdot(Zx_i-Zb)\}+\sum_{k=1}^{n}(Fz_k\cdot Xz_k)$ $M3=-\sum_{i=1}^{n}\{Fx_i\cdot(Yx_i-Yb)\}+\sum_{j=1}^{n}(Fy_j\cdot Xy_j)$
3	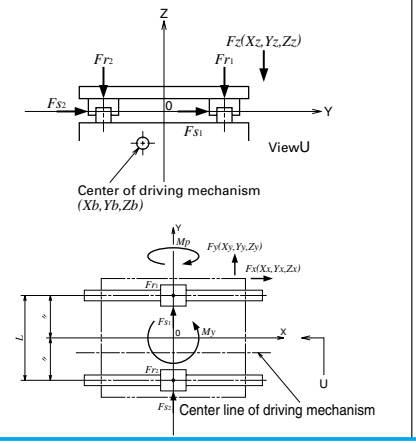	$Fr_1=\frac{\sum_{k=1}^{n}Fz_k}{2}+\frac{M1}{L} \quad , \quad Fr_2=\frac{\sum_{k=1}^{n}Fz_k}{2}-\frac{M1}{L}$ $Fs_1=Fs_2=\frac{\sum_{j=1}^{n}Fy_j}{2}$ $Mp_1=Mp_2=\frac{M2}{2} \quad , \quad My_1=My_2=\frac{M3}{2}$ $M1=\sum_{j=1}^{n}(Fy_j\cdot Zy_j)+\sum_{k=1}^{n}(Fz_k\cdot Yz_k)$ $M2=\sum_{i=1}^{n}\{Fx_i\cdot(Zx_i-Zb)\}+\sum_{k=1}^{n}(Fz_k\cdot Xz_k)$ $M3=-\sum_{i=1}^{n}\{Fx_i\cdot(Yx_i-Yb)\}+\sum_{j=1}^{n}(Fy_j\cdot Xy_j)$

www.bergab.ru Берг АБ bergab@ya.ru Тел. (495)-228-06-21, факс (495) 223-3071

www.bergab.ru Берг АБ bergab@ya.ru Тел. (495)-228-06-21, факс (495) 223-3071

Pattern	Arrangement of ball slides	Load to ball slide and deformation at Point A
4	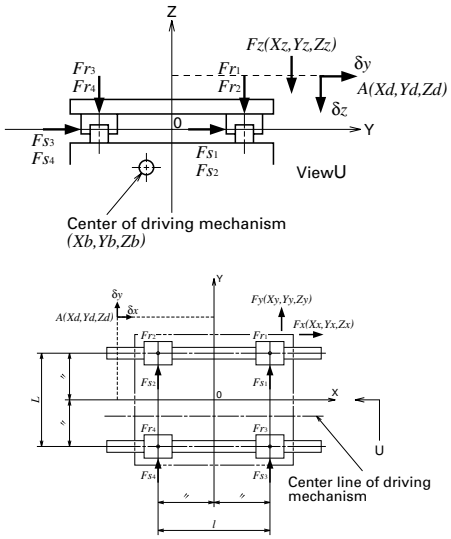	$Fr_1=\frac{\sum_{k=1}^{n}Fz_k}{4}+\frac{M1}{2L}+\frac{M2}{2l}$, $Fr_2=\frac{\sum_{k=1}^{n}Fz_k}{4}+\frac{M1}{2L}-\frac{M2}{2l}$ $Fr_3=\frac{\sum_{k=1}^{n}Fz_k}{4}-\frac{M1}{2L}+\frac{M2}{2l}$, $Fr_4=\frac{\sum_{k=1}^{n}Fz_k}{4}-\frac{M1}{2L}-\frac{M2}{2l}$ $Fs_1=Fs_3=\frac{\sum_{j=1}^{n}Fy_j}{4}+\frac{M3}{2l}$, $Fs_2=Fs_4=\frac{\sum_{j=1}^{n}Fy_j}{4}-\frac{M3}{2l}$ $M1=\sum_{j=1}^{n}(Fy_j\cdot Zy_j)+\sum_{k=1}^{n}(Fz_k\cdot Yz_k)$ $M2=\sum_{i=1}^{n}\{Fx_i(Zx_i-Zb)\}+\sum_{k=1}^{n}(Fz_k\cdot Xz_k)$ $M3=-\sum_{i=1}^{n}\{Fx_i(Yx_i-Yb)\}+\sum_{j=1}^{n}(Fy_j\cdot Xy_j)$ $\delta x=Y_d\cdot\frac{Fs_2-Fs_1}{l\cdot Ks}+Z_d\cdot\frac{Fr_1-Fr_2}{l\cdot Kr}$ $\delta y=\frac{\sum_{j=1}^{n}Fy_j}{4\cdot Ks}+X_d\cdot\frac{Fs_1-Fs_2}{l\cdot Ks}+Z_d\cdot\frac{Fr_1-Fr_3}{L\cdot Kr}$ $\delta z=\frac{\sum_{k=1}^{n}Fz_k}{4\cdot Kr}+X_d\cdot\frac{Fr_1-Fr_2}{l\cdot Kr}+Y_d\cdot\frac{Fr_1-Fr_3}{L\cdot Kr}$
5	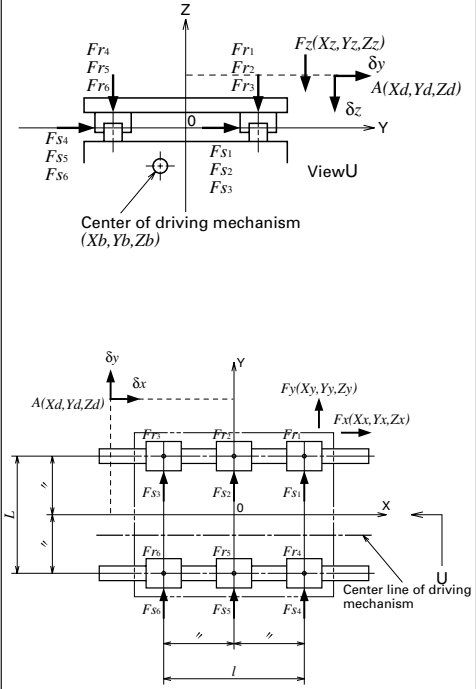	$Fr_1=\frac{\sum_{k=1}^{n}Fz_k}{6}+\frac{M1}{3L}+\frac{M2}{2l}$, $Fr_2=\frac{\sum_{k=1}^{n}Fz_k}{6}+\frac{M1}{3L}$ $Fr_3=\frac{\sum_{k=1}^{n}Fz_k}{6}+\frac{M1}{3L}-\frac{M2}{2l}$, $Fr_4=\frac{\sum_{k=1}^{n}Fz_k}{6}-\frac{M1}{3L}+\frac{M2}{2l}$ $Fr_5=\frac{\sum_{k=1}^{n}Fz_k}{6}-\frac{M1}{3L}$, $Fr_6=\frac{\sum_{k=1}^{n}Fz_k}{6}-\frac{M1}{3L}-\frac{M2}{2l}$ $Fs_1=Fs_4=\frac{\sum_{j=1}^{n}Fy_j}{6}+\frac{M3}{2l}$, $Fs_2=Fs_5=\frac{\sum_{j=1}^{n}Fy_j}{6}$ $Fs_3=Fs_6=\frac{\sum_{j=1}^{n}Fy_j}{6}-\frac{M3}{2l}$ $M1=\sum_{j=1}^{n}(Fy_j\cdot Zy_j)+\sum_{k=1}^{n}(Fz_k\cdot Yz_k)$ $M2=\sum_{i=1}^{n}\{Fx_i\cdot(Zx_i-Zb)\}+\sum_{k=1}^{n}(Fz_k\cdot Xz_k)$ $M3=-\sum_{i=1}^{n}\{Fx_i\cdot(Yx_i-Yb)\}+\sum_{j=1}^{n}(Fy_j\cdot Xy_j)$ $\delta x=Y_d\cdot\frac{Fs_3-Fs_1}{l\cdot Ks}+Z_d\cdot\frac{Fr_1-Fr_3}{l\cdot Kr}$ $\delta y=\frac{\sum_{j=1}^{n}Fy_j}{6\cdot Ks}+X_d\cdot\frac{Fs_1-Fs_3}{l\cdot Ks}+Z_d\cdot\frac{Fr_1-Fr_4}{L\cdot Kr}$ $\delta z=\frac{\sum_{k=1}^{n}Fz_k}{6\cdot Kr}+X_d\cdot\frac{Fr_1-Fr_3}{l\cdot Kr}+Y_d\cdot\frac{Fr_1-Fr_4}{L\cdot Kr}$

Pattern	Arrangement of ball slides	Load to ball slide and deformation at Point A
6	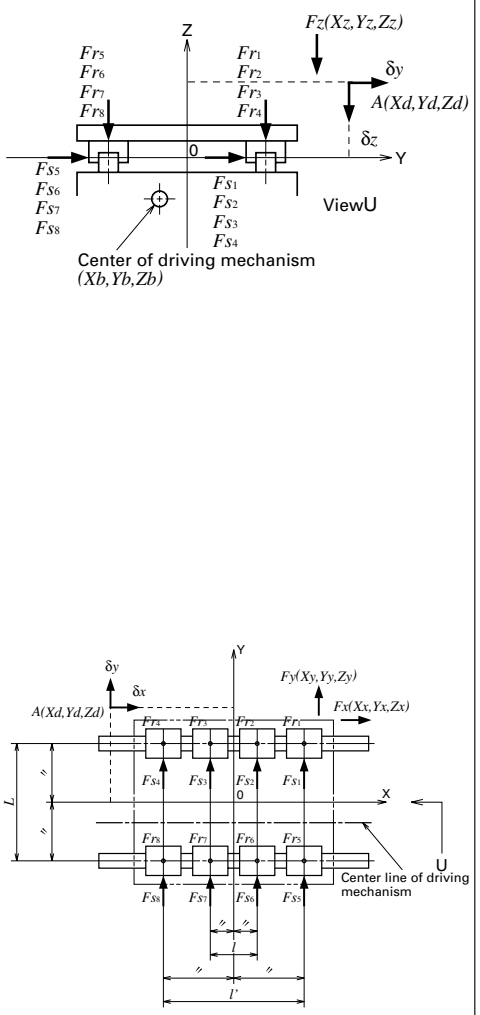	$Fr_1=\frac{\sum_{k=1}^{n}Fz_k}{8}+\frac{M1}{4L}+\frac{M2\cdot l'}{2\cdot(l^2+l'^2)}$ $Fr_2=\frac{\sum_{k=1}^{n}Fz_k}{8}+\frac{M1}{4L}+\frac{M2\cdot l}{2\cdot(l^2+l'^2)}$ $Fr_3=\frac{\sum_{k=1}^{n}Fz_k}{8}+\frac{M1}{4L}-\frac{M2\cdot l}{2\cdot(l^2+l'^2)}$ $Fr_4=\frac{\sum_{k=1}^{n}Fz_k}{8}+\frac{M1}{4L}-\frac{M2\cdot l'}{2\cdot(l^2+l'^2)}$ $Fr_5=\frac{\sum_{k=1}^{n}Fz_k}{8}-\frac{M1}{4L}+\frac{M2\cdot l'}{2\cdot(l^2+l'^2)}$ $Fr_6=\frac{\sum_{k=1}^{n}Fz_k}{8}-\frac{M1}{4L}+\frac{M2\cdot l}{2\cdot(l^2+l'^2)}$ $Fr_7=\frac{\sum_{k=1}^{n}Fz_k}{8}-\frac{M1}{4L}-\frac{M2\cdot l}{2\cdot(l^2+l'^2)}$ $Fr_8=\frac{\sum_{k=1}^{n}Fz_k}{8}-\frac{M1}{4L}-\frac{M2\cdot l'}{2\cdot(l^2+l'^2)}$ $Fs_1=Fs_5=\frac{\sum_{j=1}^{n}Fyj}{8}+\frac{M3\cdot l'}{2\cdot(l^2+l'^2)}$ $Fs_2=Fs_6=\frac{\sum_{j=1}^{n}Fy_j}{8}+\frac{M3\cdot l}{2\cdot(l^2+l'^2)}$ $Fs_3=Fs_7=\frac{\sum_{j=1}^{n}Fy_j}{8}-\frac{M3\cdot l}{2\cdot(l^2+l'^2)}$ $Fs_4=Fs_8=\frac{\sum_{j=1}^{n}Fy_j}{8}-\frac{M3\cdot l'}{2\cdot(l^2+l'^2)}$ $M1=\sum_{j=1}^{n}(Fy_j\cdot Zy_j)+\sum_{k=1}^{n}(Fz_k\cdot Yz_k)$ $M2=\sum_{i=1}^{n}\{Fx_i\cdot(Zx_i-Zb)\}+\sum_{k=1}^{n}(Fz_k\cdot Xz_k)$ $M3=-\sum_{i=1}^{n}\{Fx_i\cdot(Yx_i-Yb)\}+\sum_{j=1}^{n}(Fy_j\cdot Xy_j)$ $\delta x=Y_d\cdot\frac{Fs_4-Fs_1}{l_2\cdot Ks}+Z_d\cdot\frac{Fr_1-Fr_4}{l_2\cdot Kr}$ $\delta y=\frac{\sum_{j=1}^{n}Fy_j}{8\cdot Ks}+X_d\cdot\frac{Fs_1-Fs_4}{l_2\cdot Ks}+Z_d\cdot\frac{Fr_1-Fr_5}{L\cdot Kr}$ $\delta z=\frac{\sum_{k=1}^{n}Fz_k}{8\cdot Kr}+X_d\cdot\frac{Fr_1-Fr_4}{l_2\cdot Kr}+Y_d\cdot\frac{Fr_1-Fr_5}{L\cdot Kr}$

www.bergab.ru Берг АБ bergab@ya.ru Тел. (495)-228-06-21, факс (495) 223-3071

www.bergab.ru Берг АБ bergab@ya.ru Тел. (495)-228-06-21, факс (495) 223-3071

(4) Calculation of (Rolling) dynamic equivalent load

· For calculation of dynamic equivalent load, use the load in Table Ⅱ-3•2 which matches the intended use of the linear guide.

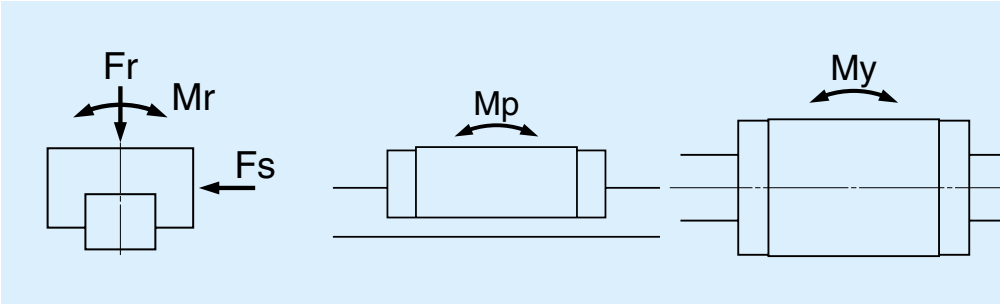

Fig. Ⅱ-3•2

Table Ⅱ-3•3 Loads in the arrangement of linear guides

Pattern	Arrangement of linear guide	Loads necessary to calculate dynamic equivalent load					Dynamic equivalent load
		Load		Moment load			
		Up/down (vertical)	Right/left (lateral)	Rolling	Pitching	Yawing	
1	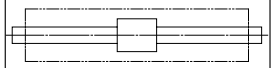	F_r	F_s	M_r	M_p	M_y	$F_r=F_r$ $F_{se}=F_s \cdot \tan\alpha$ $F_{re}=\varepsilon_r \cdot M_r$ $F_{pe}=\varepsilon_p \cdot M_p$ $F_{ye}=\varepsilon_y \cdot M_y$ α : Contact angle LH、LS、LW Series $\alpha=50°$ LA、LY、LU、LE Series $\alpha=45°$
2	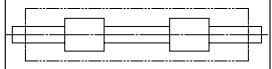	F_r	F_s	M_r			
3	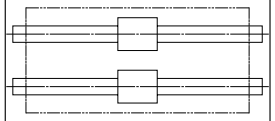	F_r	F_s		M_p	M_y	
4	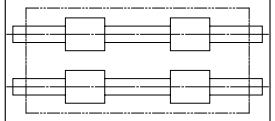	F_r	F_s				

• Use dynamic equivalent coefficient ε in the table below for easy conversion of moment load to dynamic equivalent load.

• Coefficient of each moment direction is as follows.

ε_r : Rolling direction

ε_p : Pitching direction

ε_y : Yawing direction

Table Ⅱ-3•4 Dynamic equivalent coefficients Unit:1/m

Model number	ε_r	ε_p	ε_y	Model number	ε_r	ε_p	ε_y	Model number	ε_r	ε_p	ε_y
LH15	188	111	132	SS15	177	97	115	LW17	66	125	149
LH15L	188	72	86	SS15S	177	176	210	LW21	59	108	129
LH20	142	81	97	SS20	127	87	104	LW27	53	76	91
LH20L	142	57	68	SS20S	127	138	164	LW35	32	51	61
LH25	123	68	81	SS25	111	70	83	LW50	25	38	46
LH25L	123	51	61	SS25S	111	115	137				
LH30A	98	70	83	SS30	94	57	68	LE05	196	248	248
LH30EF	98	58	69	SS30S	94	106	126	LE05S	196	323	323
LH30L	98	44	52	SS35	76	42	50	LE07	141	188	188
LH35	78	51	61	SS35S	76	94	112	LE07S	141	349	349
LH35L	78	36	43					LE07L	141	122	122
LH45	60	38	45	LA25	122	76	76	LE09	123	149	149
LH45L	60	30	36	LA25L	122	47	47	LE09S	123	277	277
LH55	51	31	37	LA30	105	63	63	LE09L	123	102	102
LH55L	51	25	30	LA30L	105	43	43	LE12	90	125	125
LH65	43	27	32	LA35	84	54	54	LE12S	90	233	233
LH65L	43	20	24	LA35L	84	37	37	LE12L	90	86	86
LH85L	33	17	20	LA45	60	41	41	LE15	50	102	102
				LA45L	60	31	31	LE15S	50	174	174
SH15	188	112	133	LA55	51	33	33	LE15L	50	68	68
SH15L	188	68	81	LA55L	51	26	26				
SH20	142	82	98	LA65	43	29	29	LU05	385	359	359
SH20L	142	56	67	LA65L	43	20	20	LU07	286	305	305
SH25	123	66	78					LU09	217	242	242
SH25L	123	47	56	LY15	133	111	111	LU09L	217	138	138
SH30A	98	74	89	LY20	100	89	89	LU09R	217	203	203
SH30EF	98	60	71	LY20L	100	65	65	LU12	167	204	204
SH30L	98	42	50	LY25	90	75	75	LU12L	167	116	116
SH35	78	54	64	LY25L	90	51	51	LU15	133	174	174
SH35L	78	36	43	LY30	74	63	63	LU15L	133	94	94
				LY30L	74	48	48				
LS15	177	116	138	LY35	61	54	54				
LS15S	177	174	208	LY35L	61	41	41				
LS20	127	94	112	LY45	46	41	41				
LS20S	127	136	162	LY45L	46	30	30				
LS25	111	70	83	LY55	39	35	35				
LS25S	111	108	129	LY55L	39	26	26				
LS30	94	63	75	LY65	33	31	31				
LS30S	94	102	121	LY65L	33	21	21				
LS35	76	54	64								
LS35S	76	87	104								

Definitions of codes appearing at the end of the model number in Table Ⅱ-3•4:

L	: Super-high load type	LH45L
S	: Medium load type	LS25S
No code	: High load type	LY45__
A	: Ball slide shape is square	LH30A (only LH30 and SH30)
EF	: Ball slide shape is flanged type (EL, FL type)	LH30EF (only LH30 and SH30)
R	: Miniature Series with ball retainer	LU09R

www.bergab.ru Берг АБ bergab@ya.ru Тел. (495)-228-06-21, факс (495) 223-3071

www.bergab.ru Берг АБ bergab@ya.ru Тел. (495)-228-06-21, факс (495) 223-3071

- Formula is determined by the relationship of loads in terms of volume. Full dynamic equivalent load can be easily obtained by using each coefficient.
  After obtaining the dynamic equivalent load of the necessary load directions from Table Ⅱ-3•3, use the formulas below to calculate full dynamic equivalent loads.

- When ***Fr*** is the largest load : ***Fe=Fr+0.5Fse+0.5Fre+0.5Fpe+0.5Fye***
- When ***Fse*** is the largest load : ***Fe=0.5Fr+Fse+0.5Fre+0.5Fpe+0.5Fye***
- When ***Fre*** is the largest load : ***Fe=0.5Fr+0.5Fse+Fre+0.5Fpe+0.5Fye***
- When ***Fpe*** is the largest load : ***Fe=0.5Fr+0.5Fse+0.5Fre+Fpe+0.5Fye***
- When ***Fye*** is the largest load : ***Fe=0.5Fr+0.5Fse+0.5Fre+0.5Fpe+Fye***

For the values of each dynamic equivalent load in the formulas above, disregard load directions and take the absolute value.

(5) Calculation of mean effective load

When the load to the ball slide deviates, obtain a mean effective load which becomes equal to the life of ball slide under variable load conditions. If the load does not vary, use the dynamic equivalent load as it is.

① When load and running distance vary stepwise (Fig. Ⅱ-3•3)

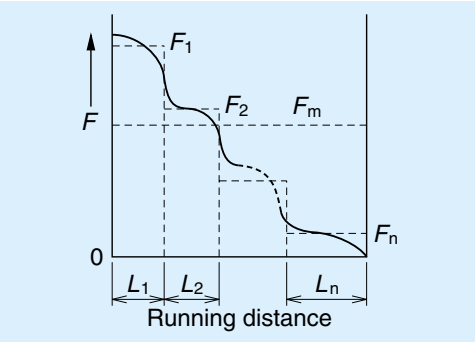

Fig. Ⅱ-3•3 Stepwise load change

Running distance while dynamic equivalent load F_1 is applied: L_1
Running distance while dynamic equivalent load F_2 is applied: L_2
Running distance while dynamic equivalent load F_3 is applied: L_3
• • • • • • • • • • • • • • • • • •
Running distance while dynamic equivalent load Fn is applied: Ln

From the above, mean effective load Fm can be obtained by the following formula.

$$Fm = \sqrt[3]{\frac{1}{L}\left(F_1^3 L_1 + F_2^3 L_2 + \ldots\ldots + F_n^3 L_n\right)}$$

Fm: Mean effective load of the deviating load (N)
L : Running distance (ΣLn)

② When load changes almost lineally (Fig. Ⅱ-3•4)

Approximate mean effective load Fm can be obtained by the following formula.

$$Fm \fallingdotseq \frac{1}{3}(Fmin + Fmax)$$

$Fmin$: Minimum value of dynamic equivalent load (N)
$Fmax$: Maximum value of dynamic equivalent load (N)

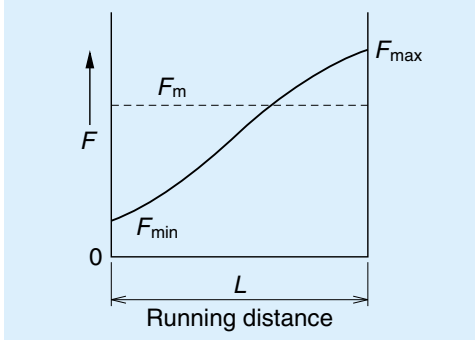

Fig. Ⅱ-3•5 Linear load change

③ When load changes in sinusoidol pattern (Fig. Ⅰ-3•5)

At time of (a): Fm = 0.65 $Fmax$
At time of (b): Fm = 0.75 $Fmax$

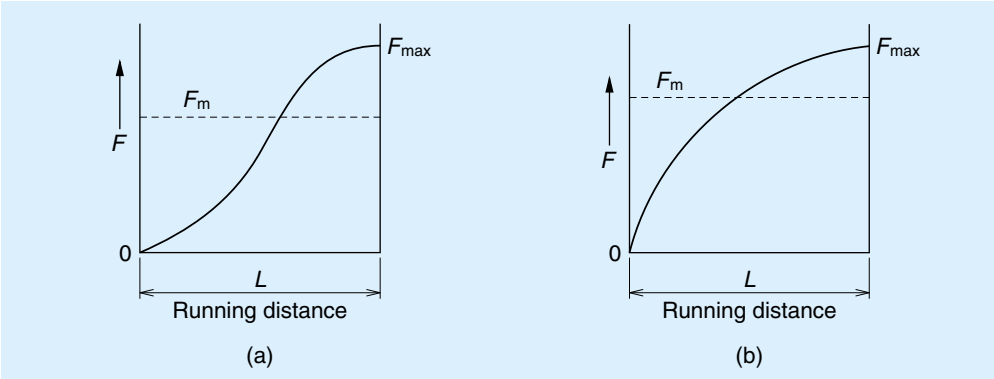

Fig. Ⅱ-3•5 Load that changes in sinusoidal pattern

(6) Various coefficients

① Load factors

- Although a load applied to the ball slide can be calculated, the actual load becomes larger than the calculated value due to the machine's vibration and impact.
- Therefore, calculation of load on the ball slide should take into consideration the load factors in Table II-3•5.

Table Ⅱ-3•5 Load factor *f*w

Impact/Vibration	Load factor
No external impact/ vibration	1.0～1.5
There is impact/ vibration from outside.	1.5～2.0
There is significant impact / vibration.	2.0～3.0

www.bergab.ru Берг АБ bergab@ya.ru Тел. (495)-228-06-21, факс (495) 223-3071

www.bergab.ru Берг АБ bergab@ya.ru Тел. (495)-228-06-21, факс (495) 223-3071

② **Hardness coefficient**

- For linear guides, in order to function optimally, both the balls and the rolling contact surface must have a hardness of HRC58 to 62 to an appropriate depth.
- The hardness of NSK linear guide fully satisfies HRC58 to 62. Therefore, in most cases it is not necessary to consider hardness. If the linear guide is made of a special material by a customer's request, as the material hardness is lower than HRC58, use the following formula for adjustment.

$C_H = f_H \cdot C$

$C_{OH} = f_H' \cdot C_o$

C_H : Basic dynamic load rating adjusted by hardness coefficient

f_H : Hardness coefficient (Refer to Fig. Ⅱ-3.6)

C_{OH} : Basic static load rating adjusted by hardness coefficient

f_H' : Static hardness coefficient (Refer to Fig. Ⅱ-3.6)

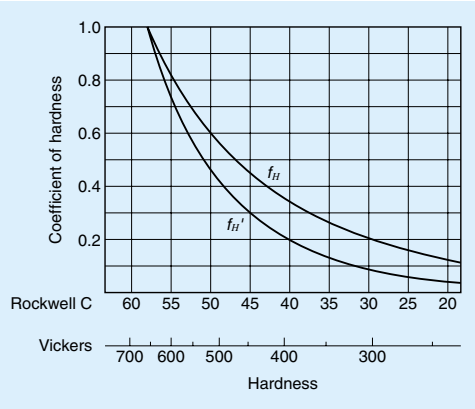

Fig. Ⅱ-3.6 Hardness coefficient

③ **Reliability coefficient**

- In general, a reliability of 90% is customary. In this case, reliability coefficient is 1. Therefore, the reliability coefficient does not have to be included in calculation.

(7) Calculation of rating life

Life calculating formula in the stroke movement with normal lubrication, the following relationships exist between ball slide mean effective load F_m (N), basic dynamic load rating to load application direction C (N), and rating fatigue life L (km).

$$L = 50 \times \left(\frac{f_H \cdot C}{f_w \cdot F_m} \right)^n \text{(km)}$$

Ball linear guide bearing which uses balls n= 3

Roller linear guide bearing which uses rollers n=10/3

f_H : Hardness coefficient

f_W : Load factor

F_m : Mean effective load

Use basic dynamic load rating C to calculate the life.

Note: Do not use basic static load rating C_o, basic static moment rating M_{R0}, M_{P0} or M_{Y0}.

Life as an entire guide way system

In those cases when several ball slides comprise a single guide way system (such as a single-axis table), the life of the ball slide to which the most strenuous condition is applied is considered to be the life of the entire system. For example, in Fig. Ⅱ-3•7, if "Ball slide A" is the ball slide which receives the largest mean effective load, or if "Ball slide A" is the one which has the shortest life, the life of the system is considered to be the life of "Ball slide A."

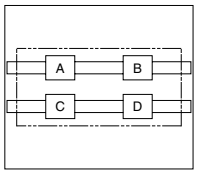

Fig. Ⅱ-3•7 Life of a system

(8) Examination of static load

① **Examine from basic static load rating**

- Examine static equivalent load P_0, which is applied to the ball slide, from basic static load rating C_0 and static permissible load factor f_s.

$$f_s = \frac{C_0}{P_0}$$

When static equivalent load P_0 is a combination of vertical loads F_r and lateral load F_s, calculate using formulas below.

For LH, LS, LW Series:

If compressed load and lateral load are combined

$$P_0 = F_r + 1.59 F_s$$

If tensile load and lateral load are combined

$$P_0 = 1.34 F_r + 1.59 F_s$$

For LA, LY, LU, LE Series:

$$P_0 = F_r + F_s$$

- The table below shows guidelines of fs for general industrial use.

Table Ⅱ-3•6

Use conditions	f_s
Under normal operating conditions	1～2
Operating under vibration/impact	1.5～3

- Basic static load rating is not a destructive force to the balls, rails, or ball slide. The balls can withstand a load more than seven times larger than the basic static load rating . It is sufficient as a safety factor to the destruction load designed for general machines.
- However, when the linear guide is mounted upside down, the strength of the bolt which secures rail and ball slide affects the strength of the entire system. Strength of the bolt and its material should be considered.

② **Examining from static moment load rating**

- Also examine static permissible load M_o from basic static moment load M_{po} and static permissible load factor f_s.

$$M_0 = \frac{M_{p0}}{f_s}$$

If more than one moment load in any direction is combined, please consult NSK.

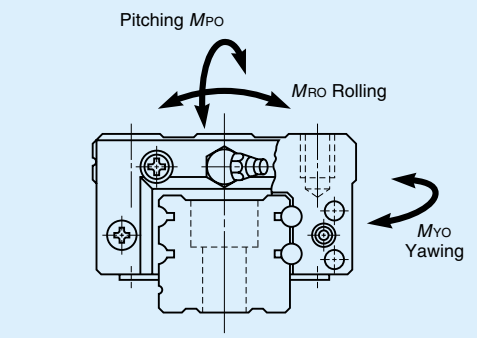

Fig. Ⅱ-3•8 Moment load directions

www.bergab.ru Берг АБ bergab@ya.ru Тел. (495)-228-06-21, факс (495) 223-3071

www.bergab.ru Берг АБ bergab@ya.ru Тел. (495)-228-06-21, факс (495) 223-3071

(9) Precautions for the design in examining the life

The following points must be heeded in examining the life.

In case of oscillating stroke

- If the balls do not rotate all the way, but only halfway, and if this minute stroke is repeated, lubricant disappears from the contact surface of balls and grooves. This generates "fretting," a premature wear. Fretting cannot be entirely prevented, but it can be mitigated.
- A grease which prevents fretting is recommended for oscillating stroke operations. Using a standard grease, life can be markedly prolonged by adding a normal stroke travel (about the ball slide length) once every several thousand cycles.

When applying pitching or yawing moment

- Load applied to the ball rows inside the ball slide is inconsistent if pitching or yawing moment load is applied. Loads are heavy on the balls on each end of the row.
- In such case, a heavy load lubricant grease or oil are recommended. Another countermeasure is using one size larger model of linear guide to reduce the load per ball.
- Moment load is insignificant for 2-rail, 4--ball slides combination which is commonly used.

When an extraordinary large load is applied during stroke

- If an extraordinary large load is applied at certain position of the stroke, calculate not only the life based on the mean effective load, but also the life based on the load in this range.

When calculated life is extraordinarily short (Less than 3000 km in calculated life.)

- In such case, the contact pressure to the balls and the rolling contact surface is extraordinarily high.
- Operated under such state continually, the life is significantly affected by the loss of lubrication and the presence of dust, and the actual life becomes shorter than calculated.
- It is necessary to reconsider arrangement, the number of ball slide, and the type of model in order to reduce the load to the ball slide.

Application at high speed

- The standard maximum allowable speed of a linear guide under normal conditions is 100 m/min. However, the maximum allowable speed can be affected by accuracy of installation, temperature, extemal loading etc.
- The end cap with high speed specification must be used when operating speed exceeds the permissible speed. Please consult NSK.

A-Ⅱ-4 Lubrication

- Refer to Page D13 for linear guide lubrication.

A-Ⅱ-4.1 Lubrication Accessories

(1) Types of lubrication accessories

- Fig. Ⅱ-4•1 and Ⅱ-4•2 show linear guide grease fittings and tube fittings.
- Grease fitting is put on an end of ball slide as standard position. However, it is possible to put grease fitting in a side of the end cap as an option for LH and LS Series, LW27 to 50, LA25 to 65, and LY25 to 65. Please consult with NSK for details.
- It is possible to put grease fitting on the side of ball slide body as another option for LY15 and 20. Refer to Figures Ⅱ-4•3, Ⅱ-4•4, and Tables Ⅱ-4•1.
- When using a piping accessory with M6 x1 screw, which is a piping standard screw, a connector is required to connect to the grease fitting hole on the ball slide, whose installation hole is M6 x 0.75. The connector is available at NSK.

Table Ⅱ-4•1 Location of the grease fitting (LY Series)

Rail width code	Low type	High type	Tap	Depth
	T_2	T_2	S	L
LY15	4.5	8.5	M6×0.75	8
LY20	5	—	M6×0.75	8

Unit: mm

Table Ⅱ-4•2 Location of the grease fitting (LH Series)

Rail width code	Low type	High type	Tap	Depth
	T_2	T_2	S	L
20	5	5	M3×0.5	8
25	6	9	M6×0.75	8
30	7	9.5	M6×0.75	8
35	8	15	M6×0.75	8
45	10	20	Rp1/8	11
55	11	21	Rp1/8	11
65	19	19	Rp1/8	11

Unit: mm

Table Ⅱ-4•3 Location of the grease fitting (LS Series)

Rail width code	Low type	High type	Tap	Depth
	T_2	T_2	S	L
15	5	—	M3×0.5	8
20	5.5	—	M3×0.5	8
25	5.5	—	M6×0.75	8
30	8	—	M6×0.75	8
35	8.5	—	M6×0.75	8

Unit: mm

www.bergab.ru Берг АБ bergab@ya.ru Тел. (495)-228-06-21, факс (495) 223-3071

www.bergab.ru Берг АБ bergab@ya.ru Тел. (495)-228-06-21, факс (495) 223-3071

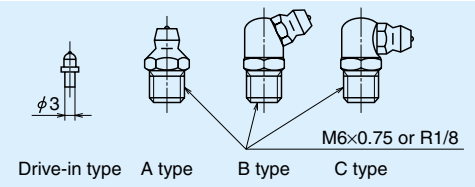

Fig. Ⅱ-4•1 Shapes of grease fitting

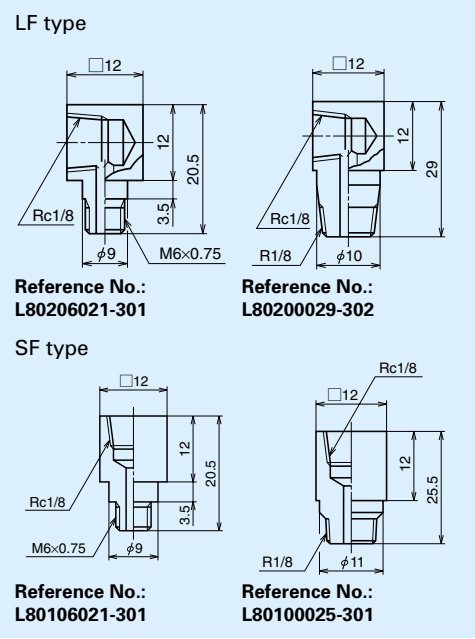

Fig. Ⅱ-4•2 Linear guide tube fitting

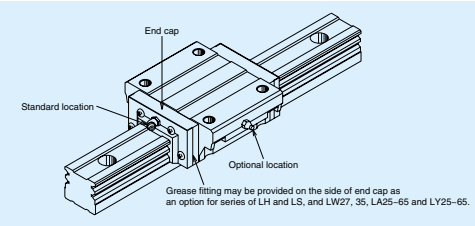

Fig. Ⅱ-4•3 Location of grease fitting

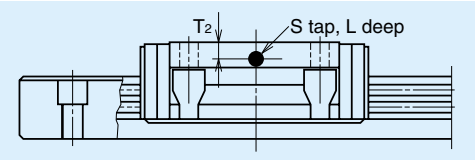

Fig. Ⅱ-4•4 Optional position of grease fitting

(2) Changing assembly direction of the lubrication accessory

① Changing direction of the grease fitting or tube fitting

Follow the procedures below.

Remove the grease fitting with a spanner.

Wrap the fitting screw section with some sealing tape, flax yarn, or the like.

Put the grease fitting back into the opening, and tighten it. If the torque becomes too large before the grease fitting turns to the desired direction, pull it out. Adjust the thickness of sealing tape, flax yarn or the like, then try again.

Note: The component where the grease fitting is inserted is made of plastic. Excessive tightening of the grease fitting damages the plastic.

② Move the grease fitting to the other side of ball slide

Follow the procedures below.

See Fig. Ⅱ-4•5: Using a spanner, remove the blind plug in the grease fitting installation hole on Face B.

Remove the grease fitting on Face A. Insert the grease fitting in the installation hole on Face B. Take the same steps as the above ① for adjusting.

Insert the blind plug in the grease fitting installation hole on Face A.

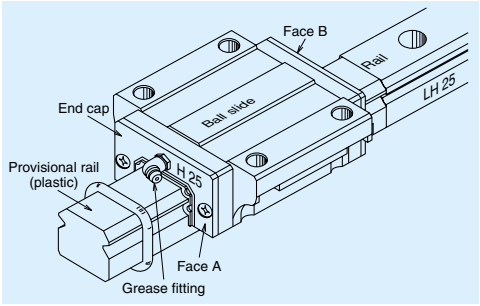

Fig. Ⅱ-4•5 Grease fitting installation

(3) Switching the grease fitting to the side of ball slide

Consult NSK to install the grease fitting to the side of the end cap or the ball slide. This is optional service.

www.bergab.ru Берг АБ bergab@ya.ru Тел. (495)-228-06-21, факс (495) 223-3071

A-Ⅱ-5 Dust Proof of Linear Guide

A-Ⅱ-5.1 Standard Specification

- To keep foreign matters from entering inside the ball slide, NSK linear guide has an end seal on both ends, and an bottom seal at the bottom.
- Table Ⅱ-5•1 shows seals for standard specification for each series.

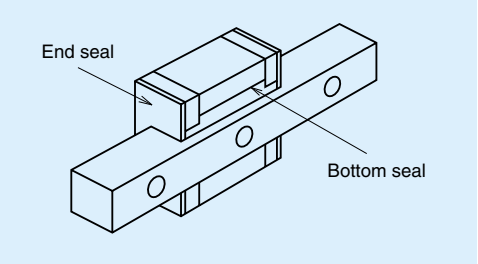

Fig. Ⅱ-5•1

Table Ⅱ-5•1 Standard seals

		End seal	Bottom seal
LH, SH Series		○	○
LS, SS Series		○	○
LA Series		○	○
LY Series		○	○
LW Series		○	○
LE Series		○	—
LU Series	LU12,15	○	—
	LU05,07,09	△	—

○: Installed as standard
△: Installed on request

- Seal friction per standard ball slide is shown in Table Ⅱ-5•2.

Table Ⅱ-5•2 Seal friction per ball slide (maximum value)

Unit: N

Series	15	20	25	30	35	45	55	65	85
LH, SH Series	8	9	10	10	12	17	22	29	30
LS, SS Series	8	9	9	9	10	—	—	—	—
LA Series	—	—	11	11	12	17	17	23	—
LY Series	2	2	8	8	10	12	12	13	—

Series	17	21	27	35	50
LW Series	6	8	12	16	20

Series	05	07	09	12	15
LU Series	0.3	0.3	0.5	0.5	0.5
LE Series	—	0.4	0.8	1.0	1.2

www.bergab.ru Берг АБ bergab@ya.ru Тел. (495)-228-06-21, факс (495) 223-3071

A-Ⅱ-5.2 "NSK K1™" Lubrication Unit

(1) What is K1 Lubrication Unit

- This is a lubrication unit made of porous plastic (polyurethane) which contains a large volume of lubrication oil, and is formed into seal.
- NSK K1 Lubrication Unit is not a simple dust prevention seal. This remarkable seal also serves as a lubrication unit by seeping oil from the plastic.
- Along with the protection plate, an NSK K1 Lubrication Unit is installed between the end cap and the end seal at both ends of the linear guide (Fig. Ⅱ-5•2). K1 Lubrication Unit is already equipped at the time of delivery.

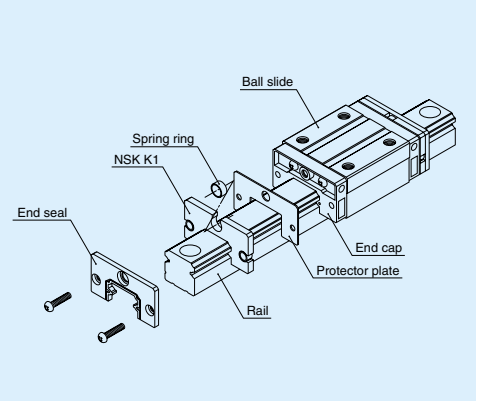

Fig. Ⅱ-5•2

(2) Functions of NSK K1 Lubrication Unit

This unit is markedly effective as a lubrication oil cup in the following occasions.

- Use it when sealed lubricant runs out ····· For production line system (maintenance-free)
- When only a small amount of oil is allowed ····· For clean facility, medical equipment, food processing machines
- When oil-absorbing dust is present ····· For woodworking machines

See MF Series NSK Linear Guide on Page A125 for details.

A-Ⅱ-5.3 Dust proof components

NSK has the following items. Select a suitable type for the operating environment.

Table Ⅱ-5•3 Optional dust proof components

Name	Purpose	Reference page
NSK K1 lubrication unit	Made of oil impregnated resin. Enhances lubricating functions.	A125～136
Double seal	Combines two end seals, enhancing sealing function.	A182
Protector	Protect end seal from hot and hard contamination.	A183
Rail cap	Prevents foreign matters such as swarf generated in cutting operation from clogging the rail-mounting hole.	A184
Inner seal	Installed inside a ball slide, and prevents foreign matters from entering the rolling contact surface.	A185
Bellows	Covers linear guide and feed screw.	A185～192

(1) Double seal

- A combination of two end seals to enhance seal function.
- When a double seal is installed, the end seal section becomes thicker than the standard item by the size shown in Table Ⅱ-5•4. Take this thickness into consideration in determining the stroke and the size of section in which a ball slide is going to be installed.
- Double-seal set: Can be installed to a completed standard item later on request. It comprises two end seals, a collar, and a small screw for installation (Fig. Ⅱ-5•4).
- When attaching a grease fitting to the end cap after the double seal is equipped, you require a connector shown in Figure Ⅱ-5•5. Please specify the connector set when ordering linear guides.
- For LA Series, double-seal set can be installed only before shipping from the factory.

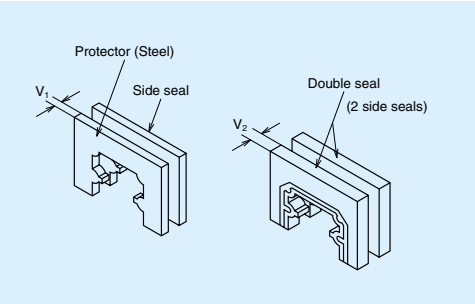

Fig. Ⅱ-5•3

Table Ⅱ-5•4 Double-seal set

Unit: mm

Model No.	Reference No. Without connector	Reference No. With connector	Increased thickness V_2
LH15	LH15WS-01	***	2.5
LH20	LH20WS-01	LH20WSC-01	2.5
LH25	LH25WS-01	LH25WSC-01	2.8
LH30	LH30WS-01	LH30WSC-01	3.6
LH35	LH35WS-01	LH35WSC-01	3.6
LH45	LH45WS-01	LH45WSC-01	4.3
LH55	LH55WS-01	LH55WSC-01	4.3
LH65	LH65WS-01	LH65WSC-01	4.9
LS15	LS15WS-01	***	2.8
LS20	LS20WS-01	LS20WSC-01	2.5
LS25	LS25WS-01	LS25WSC-01	2.8
LS30	LS30WS-01	LS25WSC-01	3.6
LS35	LS35WS-01	LS35WSC-01	3.6

Model No.	Reference No. Without connector	Reference No. With connector	Increased thickness V_2
LY15	LY15WS-01	***	3.3
LY20	LY20WS-01	***	3.3
LY25	LY25WS-02**	LY25WSC-02**	2.8
LY30	LY30WS-03**	LY30WSC-03**	3.6
LY35	LY35WS-03**	LY35WSC-03**	3.6
LY45	LY45WS-03**	LY45WSC-03**	4.3
LY55	LY55WS-02*	LY55WSC-02*	4.3
LY65	LY65WS-02**	LY65WSC-02**	4.3
LW17	LW17WS-01	***	2.6
LW21	LW21WS-01	LW21WSC-01	2.8
LW27	LW27WS-01	LW27WSC-01	2.5
LW35	LW35WS-01	LW35WSC-01	3
LW50	LW50WS-01	LW50WSC-01	3.6

*) Can be used with a new type of seal. (seal flat type, installed on the stepped rail top face)
**) Can be used with a new type of seal. (seal flat type, flat top face)
Please consult NSK when installing an old type seal.
***) Consult with NSK when attaching a connector to a drive-in type grease fitting.

www.bergab.ru Берг АБ bergab@ya.ru Тел. (495)-228-06-21, факс (495) 223-3071

www.bergab.ru Берг АБ bergab@ya.ru Тел. (495)-228-06-21, факс (495) 223-3071

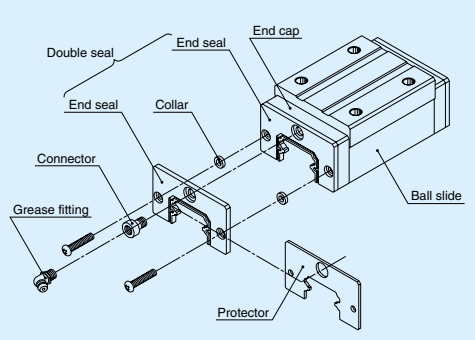

Fig. Ⅱ-5•4

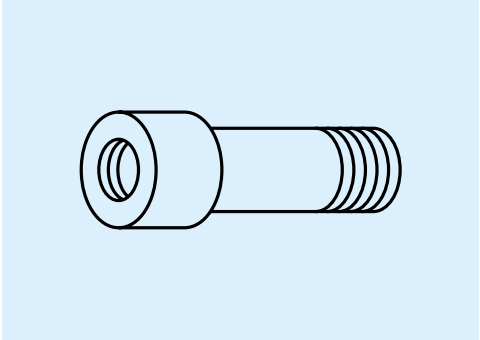

Fig. Ⅱ-5•5 Connector

(2) Protector

- A protector is usually installed outside the end seal to prevent high-temperature fine particles such as welding spatter and other hard foreign matters from entering the ball slide.
- Same as the case with a double seal, when a protector is installed, the ball slide becomes longer by the size shown in Table Ⅱ-5.5. Protector is available as a set.
- When attaching a grease fitting to the end cap after the protector is equipped, you require a connector shown in Figure Ⅱ-5•5. Please specify the connector set when ordering linear guides.
- For LA Series, protector can be installed only before shipping from the factory.

Table Ⅱ-5•5 Protector set

Unit: mm

Model No.	Reference No. Without connector	Reference No. With connector	Increased thicknessV_1
LH15	LH15PT-01	***	2.7
LH20	LH20PT-01	LH20PTC-01	2.9
LH25	LH25PT-01	LH25PTC-01	3.2
LH30	LH30PT-01	LH30PTC-01	4.2
LH35	LH35PT-01	LH35PTC-01	4.2
LH45	LH45PT-01	LH45PTC-01	4.9
LH55	LH55PT-01	LH55PTC-01	4.9
LH65	LH65PT-01	LH65PTC-01	5.5
LS15	LS15PT-01	***	3
LS20	LS20PT-01	LS20PTC-01	2.7
LS25	LS25PT-01	LS25PTC-01	3.2
LS30	LS30PT-01	LS30PTC-01	4.2
LS35	LS35PT-01	LS35PTC-01	4.2

Model No.	Reference No. Without connector	Reference No. With connector	Increased thicknessV_1
LY15	LY15PT-01	***	4.1
LY20	LY20PT-01	***	4.1
LY25	LY25PT-02**	LY25PTC-02**	3.6
LY30	LY30PT-03**	LY30PTC-03**	4.2
LY35	LY35PT-03**	LY35PTC-03**	4.2
LY45	LY45PT-03**	LY45PTC-03**	4.9
LY55	LY55PT-02*	LY55PTC-02*	4.9
LY65	LY65PT-02**	LY65PTC-02**	5.5
LW17	LW17PT-01	***	3.2
LW21	LW21PT-01	LW21PTC-01	3.2
LW27	LW27PT-01	LW27PTC-01	2.9
LW35	LW35PT-01	LW35PTC-01	3.6
LW50	LW50PT-01	LW50PTC-01	4.2

*) Can be used with a new type of seal. (seal flat type, installed on the stepped rail top face)
**) Can be used with a new type of seal. (seal flat type, flat top face)
Please consult NSK when installing old type seal.
***) Consult with NSK when attaching a connector to a drive-in type grease fitting.

(3) Cap to cover the bolt hole for rail mounting

- After the rail is mounted to the machine base, a cap is used to cover the bolt hole to prevent foreign matters from clogging up the hole or from entering into the ball slide (Fig. Ⅱ-5•6).
- The cap for the bolt hole is made of synthetic resin which is superb in its resistance to oil and wear.
- Table Ⅱ-5•6 shows sizes of the bolts for the each model number as well as reference number of the cap.
- To insert a cap into the rail bolt hole, use a flat tool (Fig. Ⅱ-5•7). Pound the cap gradually until its height becomes flush with the rail top face.

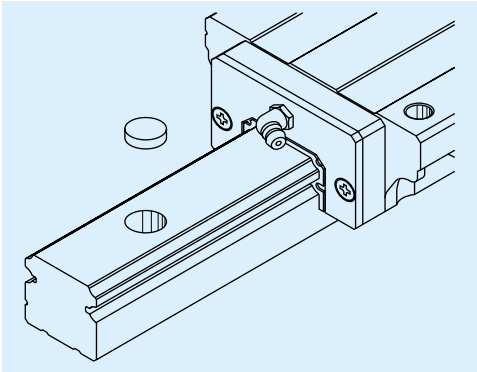

Fig. Ⅱ-5•6

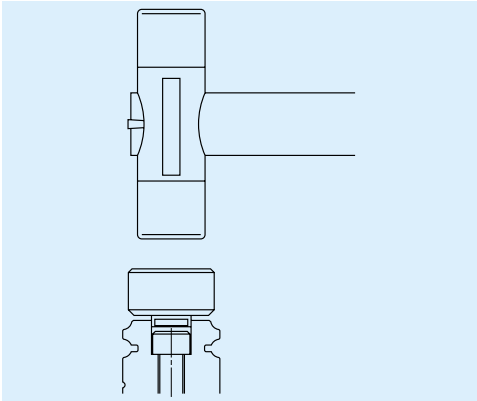

Fig. Ⅱ-5•7

Table Ⅱ-5•6 Caps to cover rail bolt hole

Model No.	Bolt to secure rail	Cap reference No.	Quantity /case
SS15(for M3) LS15(for M3) LU09(TR, TL, UL) LU12(TR, TL, UL) LU15 LE09(TR, TL, UL) PU09 PU12 PU15	M3	LG-CAP/M3	20
SH15 SS15(for M4) LH15 LS15(for M4) LY15 LW17 LW21 LW27 TS15	M4	LG-CAP/M4	20
SH20 SS20 LH20 LS20 LY20 TS20	M5	LG-CAP/M5	20
SH25 SS25 SS30 LH25 LS25 LS30 LA25 LY25 LW35 TS25	M6	LG-CAP/M6	20
SH30 SH35 SS35 LH30 LH35 LS35 LA30 LA35 LY30 LY35 LW50 TS30 TS35	M8	LG-CAP/M8	20
LH45 LA45 LY45	M12	LG-CAP/M12	20
LH55 LA55 LY55	M14	LG-CAP/M14	20
LH65 LA65 LY65	M16	LG-CAP/M16	20

www.bergab.ru Берг АБ bergab@ya.ru Тел. (495)-228-06-21, факс (495) 223-3071

www.bergab.ru Берг АБ bergab@ya.ru Тел. (495)-228-06-21, факс (495) 223-3071

(4) Inner seal

- The end seal installed on both ends of the ball slide cannot arrest entire foreign matters, though the missed amount is negligible. An inner seal protects the ball contact surface from such foreign matters which entered inside the ball slide (Fig. Ⅱ-5•8).
- Inner seal is installed inside the ball slide. Therefore, the appearance in size and the shape are the same as standard ball slide. (Inner seal is already installed before shipped from the factory.
- It is strongly recommended to use a bellows and a double seal, along with an inner seal, to maintain precision of the linear guide.

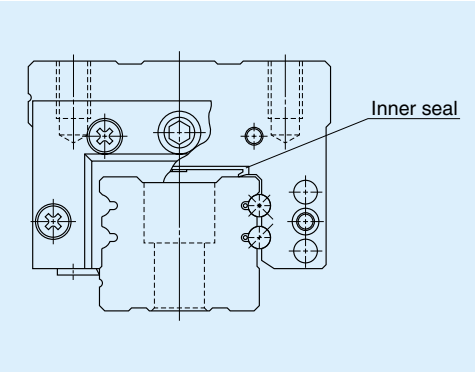

Fig. Ⅱ-5•8 Inner seal when installed

Linear guide which can use inner seal

Inner seal can be manufactured for linear guides shown in Table Ⅱ-5•7.

Table Ⅱ-5•7

Series	Model No.
LH Series	LH20, LH25, LH30, LH35, LH45, LH55, LH65, LH85
LS Series	LS20, LS25, LS30, LS35
LA Series	LA25, LA30, LA35, LA45, LA55, LA65
LY Series	LY30, LY35, LY45, LY55

(5) Bellows

- Bellows covers entire linear guide and ball screw. It has been used widely as a way of protection in an environment where foreign matters are prevalent.
- NSK has bellows exclusively for LH, LS, LA, LY and LW Series. They have a middle bellows and a bellows at both ends. For LY and LH Series, there are low and high type bellows which are in compliance with their ball slide types.
- The high type is used for AN and BN types. The low type is used for FL, EL, HL, GL, AL and BL types. By combining, the top of the bellows is slightly lower than the top face of the ball slide.
- When a high type bellows is installed to the ball slide with the height code L (such as FL), the top of the bellows becomes higher than the ball slide. But it is advantageous for stroke because the pitch of the bellows becomes larger.
- Special bellows are required for installing the linear guide vertically, or hanging it from a ceiling. Please consult NSK.
- When a bellows is used, please be advised that we cannot put a grease fitting on the end of ball slide to which the bellows is attached. (See Fig. Ⅱ-4•2 for standard position of grease fittings.) If you require the grease fitting, it shall be put on the side of end cap or ball slide body. Consult NSK for details.

① **LH and LS Series**

＊Installation in the ball slide (Fig. Ⅱ-5•9)

- Remove two machine screws (M2) which secure the end seals to the end of the ball slide (Fig. Ⅱ-5•9).
- Then place a spacer to the hole for securing end seal. Fasten the mounting plate at the end of the bellows to the ball slide with a slightly longer machine screws (provided with the bellows).

＊Installation in the rail

- To install bellows for LH Series and LS Series, lightly knock a fastener exclusively for bellows to the end of the rail (Fig. Ⅱ-5•9). Then secure the mounting plate at the end of the bellows through the tap hole of the fastener.
- As described above, a bellows can be easily installed in the end of the rail without creating a tap hole on the end of the rail.

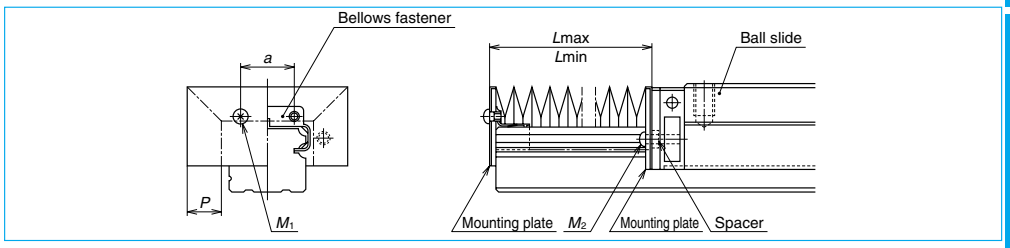

Fig. Ⅱ-5•9

Bellows fastener kit

LH series		LS series	
Model No.	Kit reference No.	Model No.	Kit reference No.
LH20	LH20FS-01	LS15	LS15FS-01
LH25	LH25FS-01	LS20	LS20FS-01
LH30	LH30FS-01	LS25	LS25FS-01
LH35	LH35FS-01	LS30	LS30FS-01
LH45	LH45FS-01	LS35	LS35FS-01
LH55	LH55FS-01		
LH65	LH65FS-01		

Specify the reference number of the bellows fastener kit when ordering it.

Contents of the kit : Bellows fastener ×1
Set screw for the ball slide side ×2
Set screw for the rail side ×2
Spacer ×2

② **LY Series**

＊Installation in the ball slide (Fig. Ⅱ-5•10)

- Remove only two machine screws which secure the end seal. (Remove top two screws when four screws are used.) Then, to secure the bellows, drive a slightly longer machine screw (provided with the bellows) into the smaller hole of the mounting plate into the holes from which two machine screws were removed.

＊Installation in the rail

- Put tap holes to the rail end face. Install the bellows mounting plate to the rail through the tap hole. Use a machine screw. NSK processes the tap holes to the rail end face upon request.

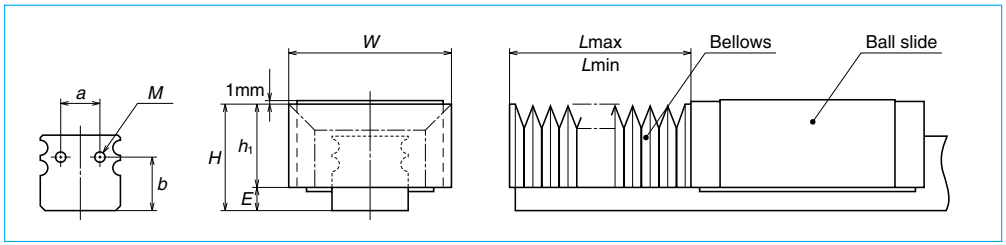

Fig. Ⅱ-5•10

www.bergab.ru Берг АБ bergab@ya.ru Тел. (495)-228-06-21, факс (495) 223-3071

www.bergab.ru Берг АБ bergab@ya.ru Тел. (495)-228-06-21, факс (495) 223-3071

③ LA and LW Series

＊Installation to the ball slide (Fig. Ⅱ-5•11 and Fig. Ⅱ-5•12)

- Remove two machine screws which secure the end seal. (For LW17 and 21, hold the end cap by hand. Otherwise, the end cap is detached from the ball slide, and the balls inside may spill out.)
- Place a spacer in the securing hole of the end seal, fasten the mounting plate on the end of the bellows using a slightly longer machine screw (provided with the bellows).

＊Installation in the rail

- Same as the case for LY Series, make tap holes to the rail end face. Fix the bellows mounting plate to the rail end face through these tap holes. Use a machine screw. NSK processes a tap hole to the rail end face when ordered with a linear guide.

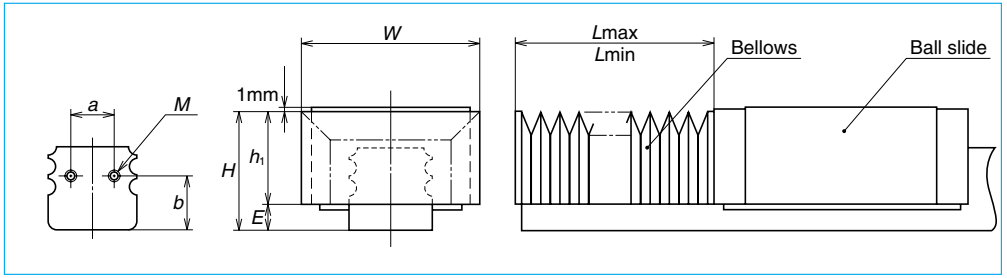

Fig. Ⅱ-5•11

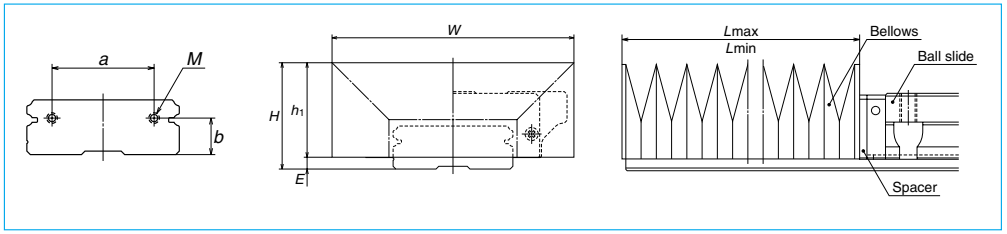

Fig. Ⅱ-5•12

Calculating length of bellows

- Formula is as follows.
- A bellows forms one block (BL) with six folds as shown in Fig. Ⅱ-5•13. Stroke is determined by multiplying by an integer of this BL.
- Length when stretched to maximum size : **Lmax = 7 x P x Number of BL**
- Length when contracted to minimum size : **Lmin = 17 x Number of BL**
- Stroke : **St = Lmax – Lmin**

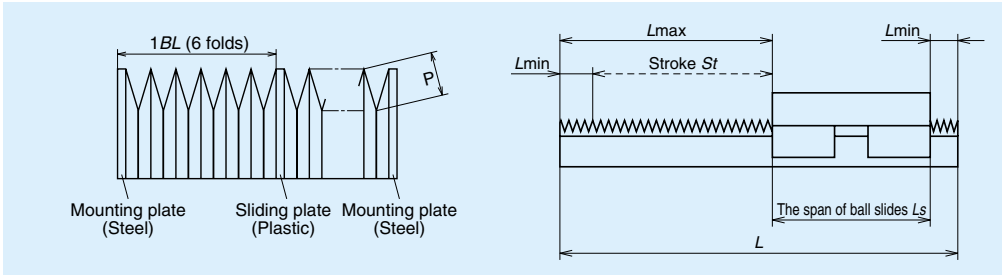

Fig. Ⅱ-5•13

Dimension tables of bellows
LH Series

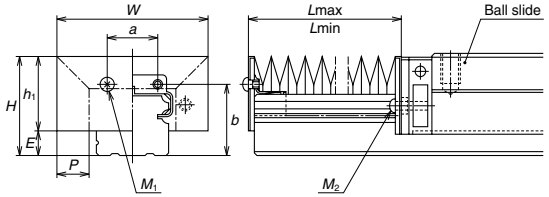

Bellows refernce number

J A H 20 N 08

- Bellows
- A: Bellows for the ends / B: Middle bellows
- Bellows for LH series
- Number of N (fold number)
- N: High type L: Low type
- Size number of linear guide

Fig. Ⅱ-5•14 Dimensions of bellows

Table Ⅱ-5•8 Dimensions of bellows

Unit: mm

Model No.	H	h_1	E	W	P	a	b	BL minimum length	M_1Tap x depth	M_2Tap x depth
JAH20N	29.5	24.5	5	48	10	13	22	17	M3×5	M2.5×16
JAH25L	35	28	7	51	10	16	26	17	M3×5	M3×18
JAH25N	39	32		61	15					
JAH30L	41	32	9	60	12	18	31	17	M4×6	M4×22
JAH30N	44	35		66	15					
JAH35L	47	37.5	9.5	72	15	24	34	17	M4×6	M4×23
JAH35N	54	44.5		82	20					
JAH45L	59	45	14	83	15	32	44.5	17	M5×8	M5×28
JAH45N	69	55		103	25					
JAH55L	69	54	15	101	20	40	50.5	17	M5×8	M5×30
JAH55N	79	64		121	30					
JAH65N	89	73	16	131	30	48	61	17	M6×8	M6×35
JAH85N※	108	90	18	173	40	54※	51※	17	M6×8	M8×40

※Bellows is fixed to the tap hole at the rail end for LH85.

Table Ⅱ-5•9 Numbers of folds (BL) and lengths of bellows

Unit: mm

Model No.	Number of BL	2	4	6	8	10	12	14	16	18	20
	L_{min}	34	68	102	136	170	204	238	272	306	340
JAH20N	Stroke	106	212	318	424	530	636	742	848	954	1060
	L_{max}	140	280	420	560	700	840	980	1120	1260	1400
JAH25L	Stroke	106	212	318	424	530	636	742	848	954	1060
	L_{max}	140	280	420	560	700	840	980	1120	1260	1400
JAH25N	Stroke	176	352	528	704	880	1056	1232	1408	1584	1760
	L_{max}	210	420	630	840	1050	1260	1470	1680	1890	2100
JAH30L	Stroke	134	268	402	536	670	804	938	1072	1206	1340
	L_{max}	168	336	504	672	840	1008	1176	1344	1512	1680
JAH30N	Stroke	176	352	528	704	880	1056	1232	1408	1584	1760
	L_{max}	210	420	630	840	1050	1260	1470	1680	1890	2100
JAH35L	Stroke	176	352	528	704	880	1056	1232	1408	1584	1760
	L_{max}	210	420	630	840	1050	1260	1470	1680	1890	2100
JAH35N	Stroke	246	492	738	984	1230	1476	1722	1968	2214	2460
	L_{max}	280	560	840	1120	1400	1680	1960	2240	2520	2800
JAH45L	Stroke	176	352	528	704	880	1058	1232	1408	1584	1760
	L_{max}	210	420	630	840	1050	1260	1470	1680	1890	2100
JAH45N	Stroke	316	632	948	1264	1580	1896	2212	2528	2844	3160
	L_{max}	350	700	1050	1400	1750	2100	2450	2800	3150	3500
JAH55L	Stroke	246	492	738	984	1230	1476	1722	1968	2214	2460
	L_{max}	280	560	840	1120	1400	1680	1960	2240	2520	2800
JAH55N	Stroke	386	772	1158	1544	1930	2316	2702	3088	3474	3860
	L_{max}	420	840	1260	1680	2100	2520	2940	3360	3780	4200
JAH65N	Stroke	386	772	1158	1544	1930	2316	2702	3088	3474	3860
	L_{max}	420	840	1260	1680	2100	2520	2940	3360	3780	4200
JAH85N※	Stroke	526	1052	1578	2104	2630	3156	3682	4208	4734	5260
	L_{max}	560	1120	1680	2240	2800	3360	3920	4480	5040	5600

Remarks: Values of odd numbers BL (3, 5, 7, ...) can be obtained by adding two values of even number BLs on both sides, then dividing the sum by two.

www.bergab.ru Берг АБ bergab@ya.ru Тел. (495)-228-06-21, факс (495) 223-3071

www.bergab.ru Берг АБ bergab@ya.ru Тел. (495)-228-06-21, факс (495) 223-3071

LS Series

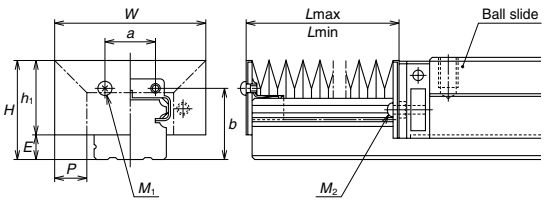

Bellows refernce number

J A S 15 L 08

- Bellows
- A: Bellows for the ends
- B: Middle bellows
- Bellows for LS series
- Number of N (fold number)
- Low type
- Size number of linear guide

Fig. Ⅱ-5•15 Dimension of bellows

Table Ⅱ-5•10 Dimensions of bellows

Unit: mm

Model No.	H	h_1	E	W	P	a	b	BL minimum length	M_1Tap x depth	M_2Tap x depth
JAS15L	23.5	18.9	4.6	43	10	8	16.5	17	M3×5	M3×14
JAS20L	27	21	6	48	10	13	19.7	17	M3×5	M2.5×14
JAS25L	32	25	7	51	10	15	23.2	17	M3×5	M3×18
JAS30L	41	32	9	66	15	16	29	17	M4×6	M4×19
JAS35L	47	36.5	10.5	72	15	22	33.5	17	M4×6	M4×22

Table Ⅱ-5•11 Numbers of folds (BL) and lengths of bellows

Unit: mm

Model No.	Number of BL	2	4	6	8	10	12	14	16	18	20
	L_{min}	34	68	102	136	170	204	238	272	306	340
JAS15L	Stroke	106	212	318	424	530	636	742	848	954	1060
	L_{max}	140	280	420	560	700	840	980	1120	1260	1400
JAS20L	Stroke	106	212	318	424	530	636	742	848	954	1060
	L_{max}	140	280	420	560	700	840	980	1120	1260	1400
JAS25L	Stroke	106	212	318	424	530	636	742	848	954	1060
	L_{max}	140	280	420	560	700	840	980	1120	1260	1400
JAS30L	Stroke	176	352	528	704	880	1056	1232	1408	1584	1760
	L_{max}	210	420	630	840	1050	1260	1470	1680	1890	2100
JAS35L	Stroke	176	352	528	704	880	1056	1232	1408	1584	1760
	L_{max}	210	420	630	840	1050	1260	1470	1680	1890	2100

Remarks: Values of odd number BL (3, 5, 7, ...) can be obtained by adding two values of even number BLs on both side, then dividing the sum by two.

LA Series

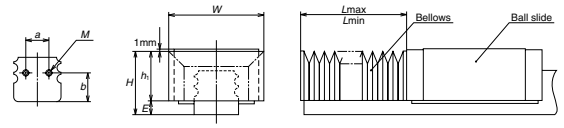

Bellows refernce number

J A A 30 L 08

- Bellows
- A: Bellows for the ends
- B: Middle bellows
- Bellows for LA series
- Number of N (fold number)
- N: High type L: Low type
- Size number of linear guide

Fig. Ⅱ-5•16 An installed bellows

Table Ⅱ-5•12 Dimensions of bellow

Unit: mm

Model number of bellows	H	h_1	E	W	P	a	b	Length of BL	Tap (M) xdepth
JAA25L	35	29.5	5.5	55	12	12	13.8	17	M3×5
JAA25N	39	33.5	5.5	61	15	12	13.8	17	M3×5
JAA30L	41	33.5	7.5	60	12	14	17.5	17	M4×6
JAA30N	44	36.5	7.5	66	15	14	17.5	17	M4×6
JAA35L	47	39.5	7.5	72	15	15	18.8	17	M4×6
JAA35N	54	46.5	7.5	82	20	15	18.8	17	M4×6
JAA45L	59	49	10	93	20	25	22.5	17	M5×8
JAA45N	69	59	10	113	30	25	22.5	17	M5×8
JAA55L	69	57	12	101	20	35	27.1	17	M5×8
JAA55N	79	67	12	121	30	35	27.1	17	M5×8
JAA65N	89	75	14	131	30	40	33.3	17	M6×12

Table Ⅱ-5•13 Numbers of folds (BL) and length of bellows

Unit: mm

Type	Model number of bellows	Length of BL	2	4	6	8	10	12	14	16	18	20
		L_{min}	34	68	102	136	170	204	238	272	306	340
Low type	JAA25L	Stroke	134	268	402	536	670	804	938	1072	1206	1340
		L_{max}	168	336	504	672	840	1008	1176	1344	1512	1680
High type	JAA25N	Stroke	176	352	528	704	880	1056	1232	1408	1584	1760
		L_{max}	210	420	630	840	1050	1260	1470	1680	1890	2100
Low type	JAA30L	Stroke	134	268	402	536	670	804	938	1072	1206	1340
		L_{max}	168	336	504	672	840	1008	1176	1344	1512	1680
High type	JAA30N	Stroke	176	352	528	704	880	1056	1232	1408	1584	1760
		L_{max}	210	420	630	840	1050	1260	1470	1680	1890	2100
Low type	JAA35L	Stroke	176	352	528	704	880	1056	1232	1408	1584	1760
		L_{max}	210	420	630	840	1050	1260	1470	1680	1890	2100
High type	JAA35N	Stroke	246	492	738	984	1230	1476	1722	1968	2214	2460
		L_{max}	280	560	840	1120	1400	1680	1960	2240	2520	2800
Low type	JAA45L	Stroke	246	492	738	984	1230	1476	1722	1968	2214	2460
		L_{max}	280	560	840	1120	1400	1680	1960	2240	2520	2800
High type	JAA45N	Stroke	386	772	1158	1544	1930	2316	2702	3088	3474	3860
		L_{max}	420	840	1260	1680	2100	2520	2940	3360	3780	4200
Low type	JAA55L	Stroke	246	492	738	984	1230	1476	1722	1968	2214	2460
		L_{max}	280	560	840	1120	1400	1680	1960	2240	2520	2800
High type	JAA55N	Stroke	386	772	1158	1544	1930	2316	2702	3088	3474	3860
		L_{max}	420	840	1260	1680	2100	2520	2940	3360	3780	4200
Low/high type	JAA65N	Stroke	386	772	1158	1544	1930	2316	2702	3088	3474	3860
		L_{max}	420	840	1260	1680	2100	2520	2940	3360	3780	4200

Note (1) Bellows for LA65 is for both low and high types.

Remarks : Values of odd number BLs are obtained by adding values of the even number BLs on both sides, then dividing the sum by two.

www.bergab.ru Берг АБ bergab@ya.ru Тел. (495)-228-06-21, факс (495) 223-3071

www.bergab.ru Берг АБ bergab@ya.ru Тел. (495)-228-06-21, факс (495) 223-3071

LY Series

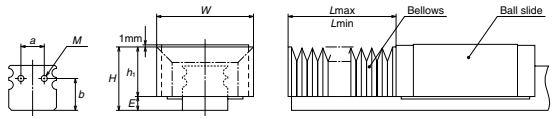

Fig. Ⅱ-5•17 An installed bellows

Bellows refernce number

J A Y 25 L 08

- Bellows: A: Bellows for the ends; B: Middle bellows
- Bellows for LY series
- Size number of linear guide
- L: Low type; N: High type
- Number of N (fold number)

Table Ⅱ-5•14 Dimensions of bellows

Unit: mm

Model number of bellows	H	h_1	E	W	P	a	b	Length of BL	Tap (M) xdepth
JAY25L,JBY25L	35	28	7	51	10	12	15.25	17	M3×6
JAY25N,JBY25N	39	32		61	15				
JAY30L,JBY30L	41	32	9	60	12	14	19	17	M4×8
JAY30N,JBY30N	44	35		66	15				
JAY35L,JBY35L	47	37.5	9.5	72	15	15	21	17	M4×8
JAY35N,JBY35N	54	44.5		82	20				
JAY45L,JBY45L	59	47	12	93	20	25	25	17	M5×8
JAY45N,JBY45N	69	57		113	30				
JAY55L,JBY55L	69	54	15	101	20	35	30.5	17	M5×8
JAY55N,JBY55N	79	64		121	30				
JAY65N,JBY65N	89	75	14	141	35	40	34.25	17	M6×12

Table Ⅱ-5•15 Numbers of folds (BL) and length of bellows

Unit: mm

Type	Model number of bellows	Length of BL	2	4	6	8	10	12	14	16	18	20
		L_{min}	34	68	102	136	170	204	238	272	306	340
Low type	JAY25L	Stroke	106	212	318	424	530	636	742	848	954	1060
	JBY25L	L_{max}	140	280	420	560	700	840	980	1120	1260	1400
High type	JAY25N	Stroke	176	352	528	704	880	1056	1232	1408	1584	1760
	JBY25N	L_{max}	210	420	630	840	1050	1260	1470	1680	1890	2100
Low type	JAY30L	Stroke	134	268	402	536	670	804	938	1072	1206	1340
	JBY30L	L_{max}	168	336	504	672	840	1008	1176	1344	1512	1680
High type	JAY30N	Stroke	176	352	528	704	880	1056	1232	1408	1584	1760
	JBY30N	L_{max}	210	420	630	840	1050	1260	1470	1680	1890	2100
Low type	JAY35L	Stroke	176	352	528	704	880	1056	1232	1408	1584	1760
	JBY35L	L_{max}	210	420	630	840	1050	1260	1470	1680	1890	2100
High type	JAY35N	Stroke	246	492	738	984	1230	1476	1722	1968	2214	2460
	JBY35N	L_{max}	280	560	840	1120	1400	1680	1960	2240	2520	2800
Low type	JAY45L	Stroke	246	492	738	984	1230	1476	1722	1968	2214	2460
	JBY45L	L_{max}	280	560	840	1120	1400	1680	1960	2240	2520	2800
High type	JAY45N	Stroke	386	772	1158	1544	1930	2316	2702	3088	3474	3860
	JBY45N	L_{max}	420	840	1260	1680	2100	2520	2940	3360	3780	4200
Low type	JAY55L	Stroke	246	492	738	984	1230	1476	1722	1968	2214	2460
	JBY55L	L_{max}	280	560	840	1120	1400	1680	1960	2240	2520	2800
High type	JAY55N	Stroke	386	772	1158	1544	1930	2316	2702	3088	3474	3860
	JBY55N	L_{max}	420	840	1260	1680	2100	2520	2940	3360	3780	4200
Low/high type[1]	JAY65N	Stroke	456	912	1368	1824	2280	2736	3192	3648	4104	4560
	JBY65N	L_{max}	490	980	1470	1960	2450	2940	3430	3920	4410	4900

Note [1] Bellows for LY65 is for both low and high types.
Remarks : Values of odd number BLs are obtained by adding values of the even number BLs on both sides, then dividing the sum by two.

LW Series

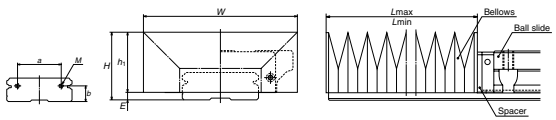

Fig. Ⅱ-5•18

Bellows refernce number

J A W 21 L 08

- Bellows: A: Bellows for the ends; B: Middle bellows
- Bellows for LW series
- Size number of linear guide
- L: Low type; N: High type
- Number of N (fold number)

Table Ⅱ-5•16 Dimensions of bellows

Unit: mm

Model number of bellows	H	h_1	E	W	P	a	b	Length of BL	Tap (M) xdepth
JAW17N	25.5	23	2.5	68	15	22	6	17	M3×6
JAW21N	29	26	3	75	17	26	7	17	M3×6
JAW27N	37	33	4	85	20	28	10	17	M3×6
JAW35L	34	30	4	100	14	48	12	17	M4×8
JAW35N	41	37		115	20				
JAW50L	46.5	42	4.5	135	20	70	14	17	M4×8
JAW50N	56.5	52		160	30				

Table Ⅱ-5•17 Numbers of folds (BL) and length of bellows

Unit: mm

Model No.	Number of BL	2	4	6	8	10	12	14	16	18	20
	L_{min}	34	68	102	136	170	204	238	272	306	340
JAW17N	Stroke	176	352	528	704	880	1056	1232	1408	1584	1760
	L_{max}	210	420	630	840	1050	1260	1470	1680	1890	2100
JAW21N	Stroke	204	408	612	816	1020	1224	1428	1632	1836	2040
	L_{max}	238	476	714	952	1190	1428	1666	1904	2142	2380
JAW27N	Stroke	246	492	738	984	1230	1476	1722	1968	2214	2460
	L_{max}	280	560	840	1120	1400	1680	1960	2240	2520	2800
JAW35L	Stroke	162	324	486	648	810	972	1134	1296	1458	1620
	L_{max}	196	392	588	784	980	1176	1372	1568	1764	1960
JAW35N	Stroke	218	436	654	872	1090	1308	1526	1744	1962	2180
	L_{max}	252	504	756	1008	1260	1512	1764	2016	2268	2520
JAW50L	Stroke	246	492	738	984	1230	1476	1722	1968	2214	2460
	L_{max}	280	560	840	1120	1400	1680	1960	2240	2520	2800
JAW50N	Stroke	386	772	1158	1544	1930	2316	2702	3088	3474	3860
	L_{max}	420	840	1260	1680	2100	2520	2940	3360	3780	4200

Remarks: Values of odd numbers BL (3, 5, 7, ...) can be obtained by adding two values of even number BLs on both sides, then dividing the sum by two.

www.bergab.ru Берг АБ bergab@ya.ru Тел. (495)-228-06-21, факс (495) 223-3071

www.bergab.ru Берг АБ bergab@ya.ru Тел. (495)-228-06-21, факс (495) 223-3071

A-Ⅱ-6 Rust Prevention and Surface Treatment

A-Ⅱ-6.1 Rust Prevention (Stainless steel)

NSK linear guide is available in stainless steel standard series.

○Stainless steel standard series

LH Series
LS Series
LE Series
LU Series
LL Series

Select from the above when using in the environment which invites rust.

A-Ⅱ-6.2 Surface Treatment

(1) Types of surface treatment

The following are common types of treatment.

○**Low temperature chrome plating (Electrolytic rust prevention black treatment)**
- Used to prevent corrosion and light reflection, and for cosmetic purpose.

○**Fluoride low temperature chrome plating**
- Fluoroplastic coating is provided following the low temperature chrome plating.
- Resistance to corrosion is higher than electrolytic rust prevention film treatment.

○**Chrome plating for industrial use (Hard chrome plating)**
- Has high hardness. Increases resistance to both wear and corrosion.

○**Electroless nickel plating**
- Creates a film of consistent thickness on complex shaped items.
- For corrosion prevention.

○**Phosphate coating**
- For corrosion prevention: usually applied prior to painting because this treatment creates porous surface.

○**Black oxide treatment (Irontetraxcide film treatment)**
- Creates irontetraxide film on the surface. For cosmetic purposes.

(2) Recommended surface treatment

Among the surface treatments mentioned above, we recommend "electrolytic rust prevention black film treatment" and "fluoride low temperature chrome plating" for rust prevention because of the result of humidity chamber test for antirust characteristics and their cost-effectiveness.
However, never apply any organic solvent for degreasing because it has adverse effect on antirust characteristics.
Refer to Page D5 for the results of humidity chamber test.

A-Ⅱ-7 Linear Guides for Special Environment

A-Ⅱ-7.1 Heat-resistant Specifications

- Standard linear guides use plastic for ball recirculation component. The environmental maximum temperature of standard linear guides is 80°C.
- Use linear guide with heat-resistant specifications under temperatures that exceed this limit.

Table Ⅱ-7•1 Comparison of materials: Standard and heat-resistant specifications

Component	Standard specification	Heat-resistant specification
Rail	Special high carbon steel (equivalent to SUS440C/JIS)	Special high carbon steel (equivalent to SUS440C/JIS)
Ball slide	Special high carbon steel (equivalent to SUS440C/JIS)	Special high carbon steel (equivalent to SUS440C/JIS)
Balls	SUJ2、SUS440C	SUJ2、SUS440C
Ball retainer	Polyacetals	SUS304
Ball retaining wire	SUS304	SUS304
End cap	Polyacetals	SUS316L
Return guide	Polyacetals	SUS316L
End seal	Acrylonitril-butadiene rubber, spc and staainless steel	Fluorine rubber, spc and staainless steel
Bottom seal	Acrylonitril-butadiene rubber, spc and staainless steel	Fluorine rubber, spc and staainless steel

Heat resistant linear guides

LH Series
LS Series
LW Series
LE Series
LU Series

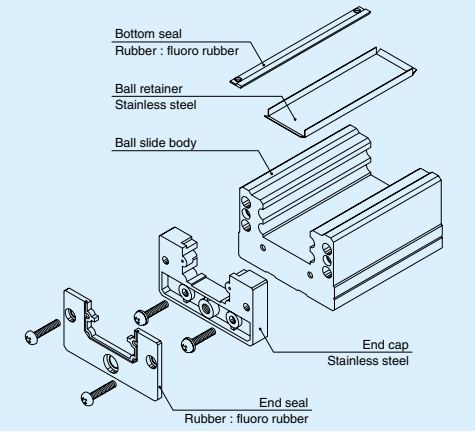

Fig. Ⅱ-7•1

A-Ⅱ-7.2 Vacuum and Clean Specifications

- Due to its abundant experience and technology, NSK manufactures linear guides that can be used in a vacuum or in clean environment. Please consult NSK.
- Linear guide specifications vary for environmental conditions.
  For example, "all stainless steel plus special grease, or solid film lubricant" for vacuum environment.
- NSK has low-dust generating grease "**LG2**" which is ideal for clean environment.
  Refer to Page D8 for details.

www.bergab.ru Берг АБ bergab@ya.ru Тел. (495)-228-06-21, факс (495) 223-3071

www.bergab.ru Берг АБ bergab@ya.ru Тел. (495)-228-06-21, факс (495) 223-3071

A-Ⅱ-8 Noise

- Appropriate design and highly accurate processing technology contribute to reducing noise of NSK linear guides.
- Fig. Ⅱ-8•1 is a noise-level data plot. The product of D_w (mm) ball diameter of linear guide and travel speed V (m/min) is shown on the abscissa. The noise level is shown on the ordinate.
- The plot indicates that the noise levels remain within a narrow straight belt irrespective of the linear guide type (LH25 through LH65 are plotted here).
- Noise level can be estimated; find the ball diameter from the linear guide model number, then incorporate a travel speed.

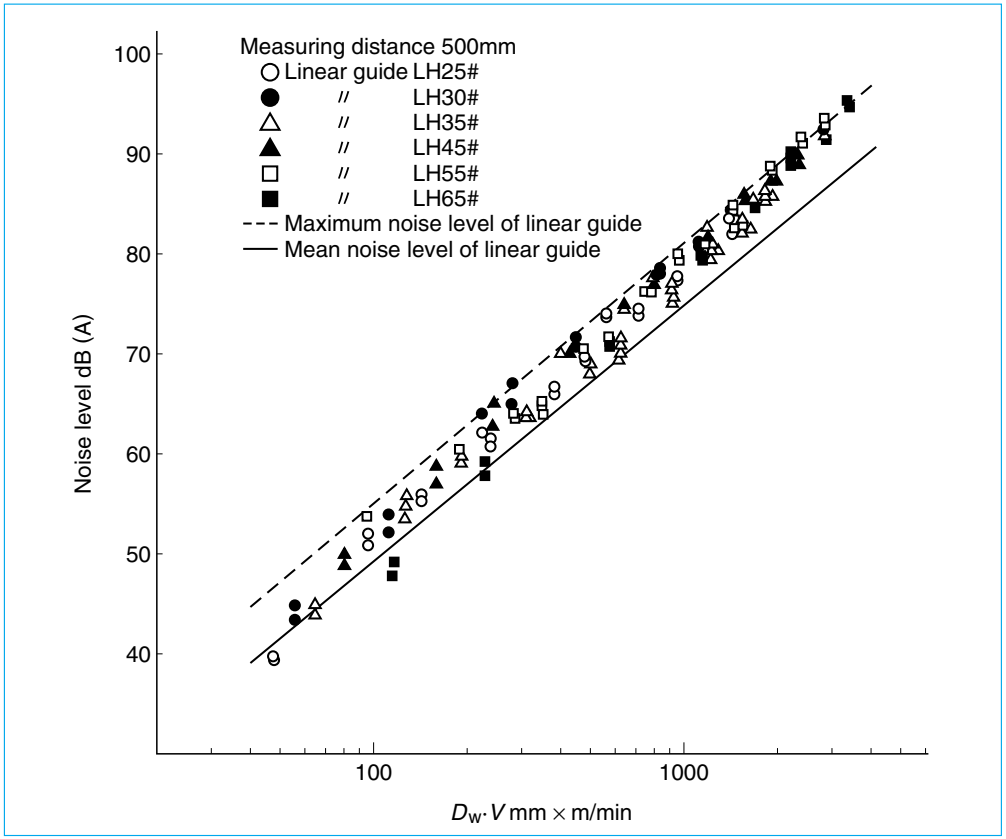

Fig. Ⅱ-8•1 Noise levels of linear guides

Example of estimate
LS30, and the travel speed is 100 m/min.
D_w = 4.762; V = 100 m/min
Therefore,
$D_w \cdot V$= 4.762 x 100 = 476.2
Therefore, from Fig. Ⅱ-8•1, the noise level is 66 ~ 72dB (A).

A-Ⅱ-9 Arrangement and Mounting of Linear Guide

A-Ⅱ-9.1 Arrangement

- For NSK linear guide, the datum face of the rail and of the ball slide are marked with either an "datum face groove" or with an "arrow."
- In case that two or more linear guides are used together, one linear guide is designated as a reference side guide, and the rest is adjusting side guide(s). The reference side rail has its reference number, serial number, and "KL" mark on the opposite side of the datum face (Fig. Ⅱ-9•1).
- When the datum faces of the reference side rail and ball slides are pressed to their mounting datum faces respectively, the variation of distance (mounting width W_2 or W_3) between the datum faces of the rails and that of the ball slides must be a minimum and therefore, it is specified as the standard.
(Fig. Ⅱ-9•2 and Ⅱ-9•3)
- The ways to indicate the datum faces of LE and LU Series are shown in Table Ⅱ-9•1.

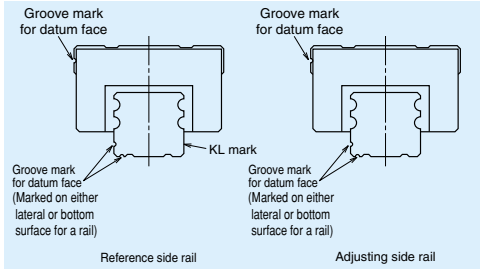

Fig. Ⅱ-9•1

Example of arrangement

- Arrangement of the linear guide must be determined taking into account the table position, its direction (horizontal, vertical, inclined, hanging from the ceiling), stroke, the size of bed and the table in the equipment as a whole. Table II-9.2 shows a common arrangement examples, and features/precautions for each case.

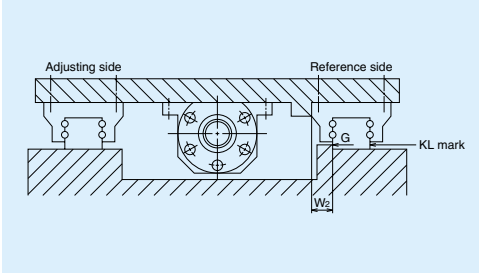

Fig. Ⅱ-9•2 Most common setting of the reference side rail

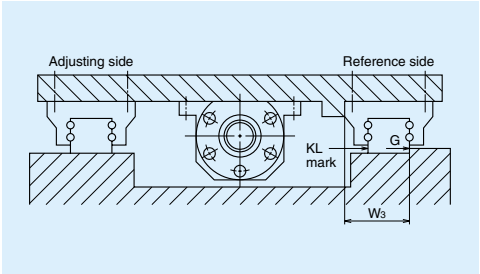

Fig. Ⅱ-9•3 Setting of the reference side rail in certain occasions

Table Ⅱ-9.1 Marks on the rail datum faces in LE, LU Series

Model No. / Material	LU05, 07, 09 LE05, 07, 09, 12	LU12, 15	LE15 LE09, 12 (with a ball retainer)
Special high carbon steel	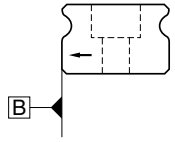	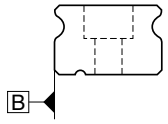	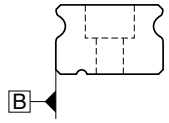
Stainless steel		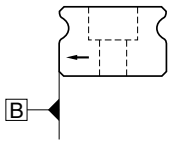	

www.bergab.ru Берг АБ bergab@ya.ru Тел. (495)-228-06-21, факс (495) 223-3071

www.bergab.ru Берг АБ bergab@ya.ru Тел. (495)-228-06-21, факс (495) 223-3071

Table Ⅱ-9•2 Arrangement example

Arrangement	Features/Precautions
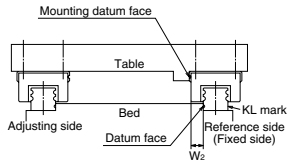	• Easy in highly-accurate installation (recommended arrangement)
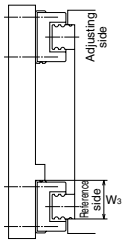	• Easy in highly-accurate installation • Lubricant oil may not be supplied to ball slide. Precaution is required in the oil supply design.
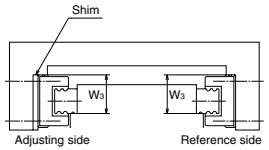	• Slightly difficult for highly-accurate installation • Life of linear guide is affected by mounting accuracy. • When oil lubricant is used, precaution is required in oil supply design.
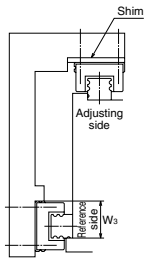	• Difficult for highly-accurate installation • For a linear guide mounted in sideways, precaution is required in oil supply design if oil lubricant is used.
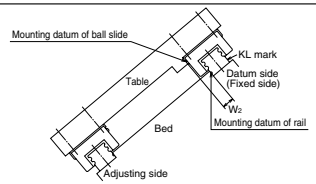	• Rather easy in highly-accurate installation • When oil lubricant is used, precaution is required in oil supply design.
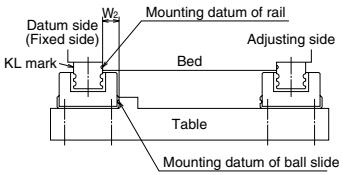	• Easy in highly-accurate installation if the linear guide is installed to the machine base first, then hang upside down along with the machine base. • Ball slide may detach from the rail and fall down if the linear guide is damaged and all the balls in the ball slide fall out. It is necessary to take preventive measures against the falling of the ball slide.

A-Ⅱ-9.2 Mounting Accuracy

(1) Accuracy of the mounting base of machine

- Mounting accuracy of linear guide usually copies the accuracy of the machine base.
- However, when two or more ball slides are assembled to each rail, the table stroke becomes shorter than the mounting surface. This, along with the fact that the mounting error is evenly spread, contributes to a higher table accuracy than the mounting face accuracy, reducing the error to about 1/3 in average (Fig. Ⅱ-9•4).

(2) Installation error

- Mounting error affects mainly three factors: life, friction and accuracy (Table Ⅱ-9•3).

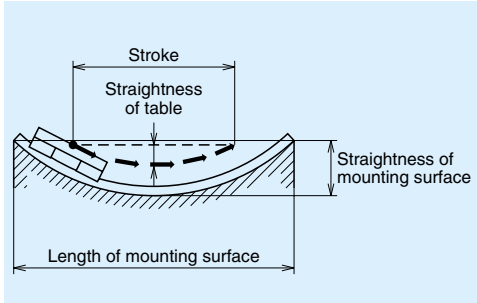

Fig. Ⅱ-9•4

Table Ⅱ-9•3 Influence of mounting error

Factor		Influence
Life	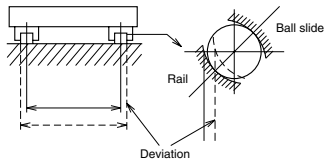	• Large mounting error generates a force which twists the ball slide and reduces its life. • It also distorts the contact point of the ball and the groove and changes contact angle, lowering rigidity.
Friction	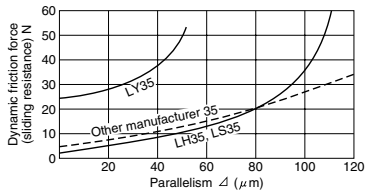	• LH and LS Series are affected very little by mounting error thanks to their small friction. (self alignment) • However, because of off-set gothic arch grooves, their friction suddenly soars once the mounting error exceeds a certain level. • Mounting error severely affects friction of LY Series with heavy preload.
Accuracy	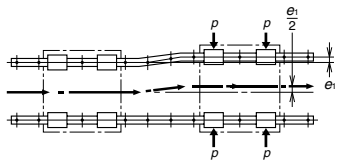	• When rigidity of four ball slides are equal, the theoretical straightness becomes 1/2 of the installation error e_1. • However, this value becomes slightly larger due to deformation of the rail and the machine base.

www.bergab.ru Берг АБ bergab@ya.ru Тел. (495)-228-06-21, факс (495) 223-3071

www.bergab.ru Берг АБ bergab@ya.ru Тел. (495)-228-06-21, факс (495) 223-3071

(3) Permissible values of mounting error

- Of the three major factors which are affected by the mounting error, NSK focuses on life. By the NSK standard, permissible values of mounting error are the values which allows 5000 km or longer life under the following conditions.
  - Load volume per ball slide is 8% of the basic dynamic load rating C.
  - Rigidity of the machine base is infinite.
- Fig. Ⅱ-9•5 and Ⅱ-9•6 are representing the mounting errors. Their permissible values of mounting error are shown in Table Ⅱ-9•4 to Ⅱ-9•7.

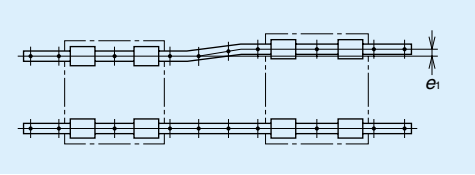

Fig. Ⅱ-9•5

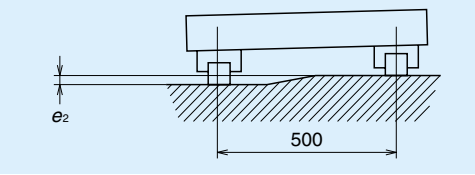

Fig. Ⅱ-9•6

Table Ⅱ-9•4 Permissible values of parallelism for LH and SH Series Unit: μm

Value	Preload	Model No.								
		H15	H20	H25	H30	H35	H45	H55	H65	H85
Permissible values of parallelism in two rails e_1	Z0, ZT	22	30	40	45	55	65	80	110	120
	Z1, ZZ	18	20	25	30	35	45	55	70	90
	Z3	13	15	20	25	30	40	45	60	70
Permissible values of parallelism (height) in two rails e_2	Z0, ZT	375μm/500mm								
	Z1, ZZ, Z3	330μm/500mm								

Table Ⅱ-9•5 Permissible values of parallelism for LS and SS Series Unit: μm

Value	Preload	Model No.				
		S15	S20	S25	S30	S35
Permissible values of parallelism in two rails e_1	Z0, ZT	20	22	30	35	40
	Z1, ZZ	15	17	20	25	30
	Z3	12	15	15	20	25
Permissible values of parallelism (height) in two rails e_2	Z0, ZT	375μm/500mm				
	Z1, ZZ, Z3	330μm/500mm				

Table Ⅱ-9•6 Permissible values of parallelism for LA Series Unit: μm

Value	Preload	Model No.					
		LA25	LA30	LA35	LA45	LA55	LA65
Permissible values of parallelism in two rails e_1	Z3	15	17	20	25	30	40
	Z4	13	15	17	20	25	30
Permissible values of parallelism (height) in two rails e_2		185μm/500mm					

Table Ⅱ-9•7 Permissible values of parallelism for LY Series Unit: μm

Value	Preload	Model No.							
		LY15	LY20	LY25	LY30	LY35	LY45	LY55	LY65
Permissible values of parallelism in two rails e_1	Z0	20	25	25	25	30	40	50	60
	Z1	20	25	20	25	30	35	45	50
	Z2	15	20	20	20	25	30	40	45
	Z3	15	20	15	20	20	25	35	40
	Z4	—	—	15	15	20	25	30	35
Permissible values of parallelism (height) in two rails e_2		185μm/500mm							

Table Ⅱ-9•8 Permissible values of parallelism for LU, LE and LW Series Unit: μm

		Preload	LU					LE					LW				
			05	07	09	12	15	05	07	09	12	15	17	21	27	35	50
規格	e_1	Z0, ZT	10	12	15	20	25	10	12	15	18	22	20	20	25	38	50
		Z1	7	10	13	15	21	5	7	10	13	17	9	9	13	23	34
	e_2	Z0, ZT	150μm/200mm					50μm/200mm					100μm/500mm				
		Z1	90μm/200mm					35μm/200mm					45μm/500mm				

(4) Running accuracy and the influence of even-off effect

- When installed in a machine base, the linear guide is affected by the flatness of the mounting face of the machine base. However, in the case of two-rails/four-ball slides specification, which is most widely used, the straightness as a table unit is generally less than the straightness as a single component. This is due to the even-off effect generated by the shorter stroke, compared to rail length, as well as by interaction between the rails, and ball slides.
- Fig. Ⅱ-9•9 shows an actually measured straightness of the table which uses NSK linear guide. In this case, the final straightness of the table is about 1/5 of the straightness of the mounting face.

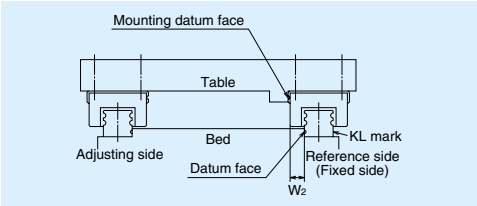

Fig. Ⅱ-9•7

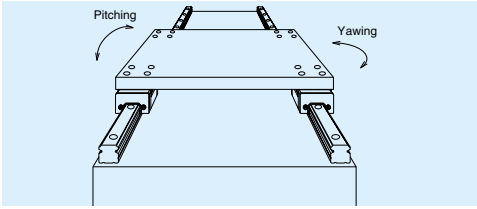

Fig. Ⅱ-9•8

Fig. Ⅱ-9•9 Straightness of the table equipped with linear guide

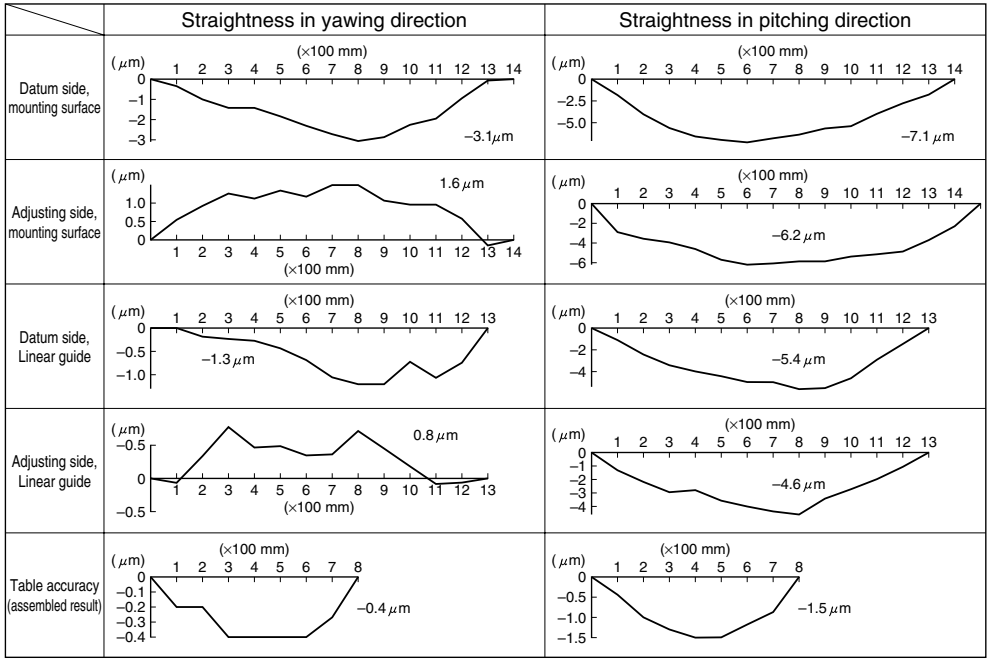

www.bergab.ru Берг АБ bergab@ya.ru Тел. (495)-228-06-21, факс (495) 223-3071

www.bergab.ru Берг АБ bergab@ya.ru Тел. (495)-228-06-21, факс (495) 223-3071

A-Ⅱ-9.3 Installation

(1) Shoulder height of the mounting face of the machine base and corner radius r

- Fig. Ⅱ-9•10, Ⅱ-9•11, Table Ⅱ-9•9 and Ⅱ-9•10 show shoulder height of the mounting face of the machine base and the size of corner r. These figures are relevant when the linear guide is pressed to the shoulder of the bed or table (the raised section from where the mounting face begins), and horizontally secured to it.
- The shoulder should be thick (wide) enough, so it is not deformed by the pressing force.

(2) Tightening torque of the bolt

- Table Ⅱ-9•8 shows tightening torque of the bolt when the rail is secured to the fixture of ball groove grinding machine.
- Apply same torque in this table when securing the rail to the machine base. Equal accuracy at the time of grinding can be obtained.

Table Ⅱ-9•8 Bolt tightening torque (Bolt material: High carbon chromium steel)

Unit: N · m

Bolt size	Tightening torque	Bolt size	Tightening torque
M2.3	0.38	M10	43
M2.5	0.58	M12	76
M3	1.06	M14	122
M4	2.5	M16	196
M5	5.1	M18	265
M6	8.6	M22	520
M8	22	—	—

(3) Installation procedures

- There are two installation ways depending on the accuracy requirement.
  a. Installation with high accuracy
  b. Accuracy is not high, but easy to install
- For both methods, wipe off the rust preventive oil applied to the linear guide. Remove burrs and small bumps on the bed and table mounting face with an oilstone (Fig. Ⅱ-9•12).
  Apply machine oil or similar oil with low viscosity to the mounting face to increase the rust preventive effect.
- Linear guide is a precision product. Handle with care.

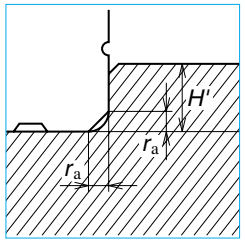

Fig. Ⅱ-9•10 Shoulder for the rail datum face

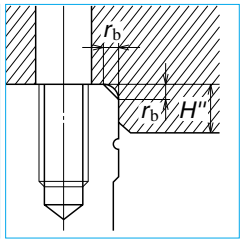

Fig. Ⅱ-9•11 Shoulder for the ball slide datum face

Table Ⅱ-9•9 Height of the shoulder and corner radius of the mounting face (LH, LS, LA and LY Series)

Unit: mm

Rail width	Corner radius (maximum)		Shoulder height for the rail	
	r_a	r_b	H'	H''
15	0.5	0.5	4.0	4
20	0.5	0.5	4.5	5
25	0.5	0.5	5.0	5
30	0.5	0.5	6.0	6
35	0.5	0.5	6.0	6
45	0.7	0.7	8.0	8
55	0.7	0.7	10.0	10
65	1.0	1.0	11.0	11
85	1.5	1.5	15.0	15

Table Ⅱ-9•10 Height of the shoulder and corner radius of the mounting face (LU, LE and LW Series)

Unit: mm

Rail width	Corner radius (maximum)		Shoulder height for the rail	
	r_a	r_b	H'	H''
LU05	0.2	0.2	0.7	2
LU07	0.2	0.3	1.2	3
LU09	0.3	0.3	1.9	3
LU12	0.3	0.3	2.5	4
LU15	0.3	0.5	3.5	5
LE05	0.2	0.2	1.1	2
LE07	0.2	0.3	1.7	3
LE09	0.3	0.3	3.5	3
LE12	0.3	0.3	3.5	4
LE15	0.3	0.5	3.5	5
LW17	0.3	0.3	2.2	4
LW21	0.3	0.3	2.5	5
LW27	0.5	0.5	3.5	5
LW35	0.5	0.8	3.5	5
LW50	0.8	0.8	4.0	6

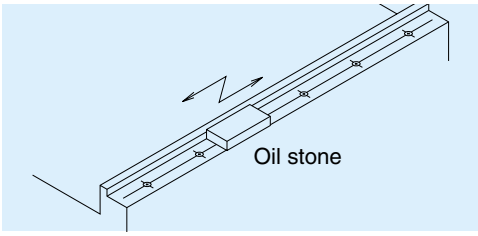

Fig. Ⅱ-9•12

Ⓐ Highly accurate installation

ⓐ Rail installation procedures

ⓐ-1) Machine base has a shoulder on the side where the reference side rail is installed.

① Confirm that the rail is reference side rail, and the datum face of the rail comes to face to face with the shoulder of the bed. Keep the ball slides on the rail, and carefully place the rail on the bed on its mounting face. Temporarily tighten the bolts.
At this time, press the rail from sideways to make the rail tightly contact to the shoulder of the bed. Apply tightening torque to the bolt in Table Ⅱ-9•7 when tightening a shoulder plate (Fig. Ⅱ-9•13).
Refer to "**(4) Various methods to press linear guide sideways.**"

② For final tightening of the bolts to secure the rail, tighten the bolt on either end of the rail, then proceed to other end.
If the datum face is on the left side as shown in Fig. Ⅱ-9•14, tighten the bolt at the farthest end first, then proceed to near end.
This way, a bolt rotating force presses the rail against the shoulder. (Therefore, the rail is pressed sufficiently tight against the shoulder by merely pressing the rail by hand. But if there is a possibility applying a lateral impact load, it is necessary to use a shoulder plate to prevent the rail from slipping.)

③ If the mounting face of the bed where the adjusting side rail is installed also has a shoulder, repeat the steps ① - ②.

④ If there is no shoulder on the mounting face of the bed for the adjusting side rail: Secure a measuring table to the ball slides of the reference side rail (Fig. Ⅱ-9•15). Use this to adjust the parallelism of the adjusting side rail. Check parallelism of the adjusting side rail with a dial gauge from one end of the rail, tightening the bolts one by one.
The measuring table is more stable if secured to two bearings, but one bearing is sufficient.
Parallelism between two rails can also be checked by the same method in Fig. Ⅱ-9•15 when there is a shoulder on the face where the adjusting side rail is installed.

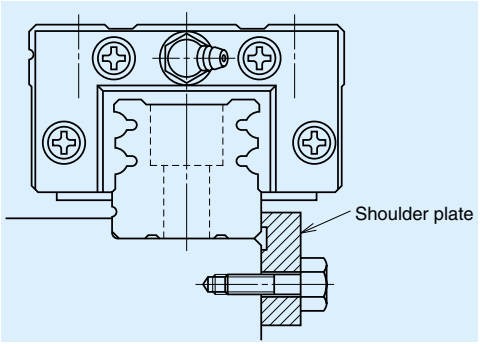

Fig. Ⅱ-9•13 Pressing the rail from sideways

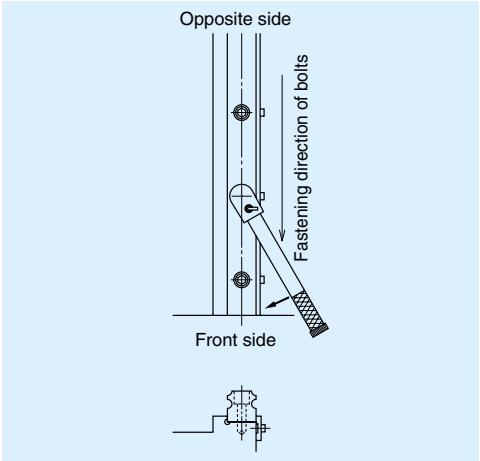

Fig. Ⅱ-9•14 Rail installation

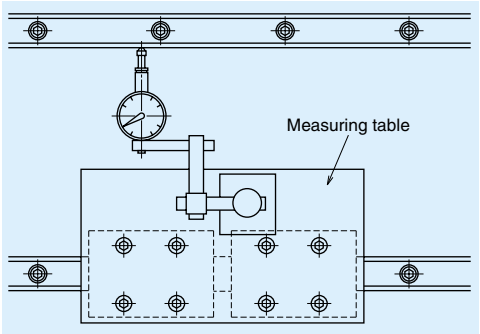

Fig. Ⅱ-9•15 Measuring parallelism

www.bergab.ru Берг АБ bergab@ya.ru Тел. (495)-228-06-21, факс (495) 223-3071

www.bergab.ru Берг АБ bergab@ya.ru Тел. (495)-228-06-21, факс (495) 223-3071

ⓐ-2) When machine base does not have a shoulder on the side where the reference side rail is installed

① Carefully place the reference side rail on the bed on its mounting face. Temporarily tighten the bolts. Do not tighten the bolts all the way, but stop tightening when the bolt enters halfway into the bolt hole. This makes the proceeding steps easier.

② Place the straight edge almost parallel to the reference side rail which is temporarily secured by bolts. (At the both ends of the rail and straight edge, the distance between them shall be almost same.)

③ Once the position of the straight edge is determined, use it as the reference. With a dial gauge, check parallelism with the rail, and adjust the rail if necessary. Then tighten the bolts.
Ensure that the straight edge does not move while the bolts are being tightened.
This procedure should be carried out starting from one end of the rail to the other end. (Fig. Ⅱ-9•16).

④ Finally tighten all bolts with specified torque.

⑤ There are two ways for installation of adjusting side rail:
1. Based on the straight edge which is used for reference side rail installation
2. Based on the reference side rail which is installed prior to the adjusting side rail.
In both way, use a dial gauge to measure parallelism.
Other procedures are the same as ①~④, and the ④ for case where there is a shoulder on the machine base.

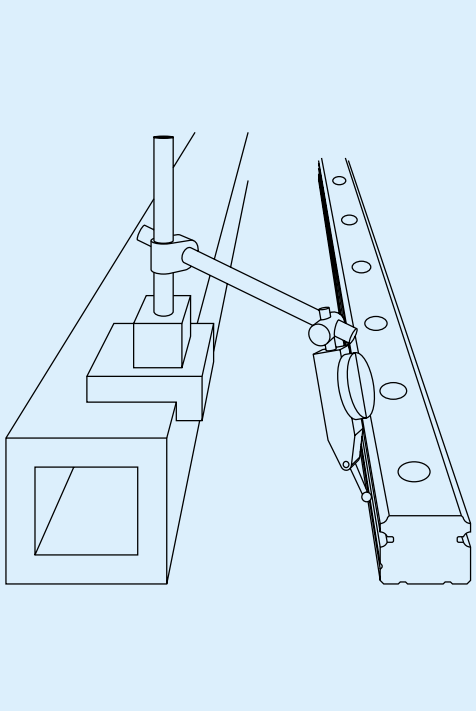

Fig. Ⅱ-9•16

ⓑ Procedures of ball slide installation

ⓑ-1) When table has a shoulder

① Arrange the ball slides so that locations match to their mounting section of the table. Carefully place the table on the ball slides. Temporarily tighten all bolts.

② While pressing the table from sideways, further tighten the bolts which secure the ball slides on the reference side, so the table shoulder and the ball slide's mounting datum face are sufficiently tightly pressed.
If a shoulder plate is provided, first tighten the bolts of the plate, then further tighten the bolts to the ball slides (Fig. Ⅱ-9•17).

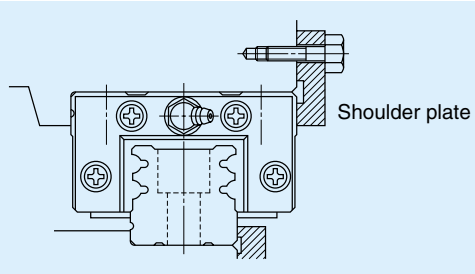

Fig. Ⅱ-9•17 Pressing ball slide from sideways

③ Then, further tighten the bolts for ball slides on the adjusting side rail.
Move the table by hand to confirm that there is no abnormality such as excessive friction force during stroking. (This confirms that the correct installation steps were taken.)

④ Finally, tighten all bolts with standard torque.

ⓑ-2) When table does not have a shoulder

① Arrange the ball slides so that locations match to their mounting section of the table. Carefully place the table on the ball slides. Temporarily tighten bolts to secure ball slides.

② Since the table does not have a shoulder, immediately tighten the bolts further to secure ball slides.

③ Move the table by hand to confirm that there is no abnormality. Finally, tighten all bolts with standard torque.

Ⓑ Easy installation

① Carefully place the reference side rail on the bed. Then tighten the bolts for installation with specified torque.

② Temporarily tighten the bolts on the adjusting side rail.

③ Tighten the ball slides on the reference side rail and one ball slide on the adjustment side rail with specified torque. Leave the rest of the ball slide on the adjusting side rail temporarily tightened (Fig. Ⅱ-9•18).

④ While moving the table with each pitch of the bolt for rail: With specified torque, tighten the rail mounting bolt which is located immediately adjacent to the ball slide on the adjusting side rail that had been finally tightened.
Take this procedure from one end to the other.

⑤ Return the table to the original position once. Then with standard torque, tighten the rest of the ball slides on the adjusting side. Then, by the same procedure as in ④, tighten the rest of the rail mounting bolts with standard torque. Move the table to check any abnormality such as large friction force.

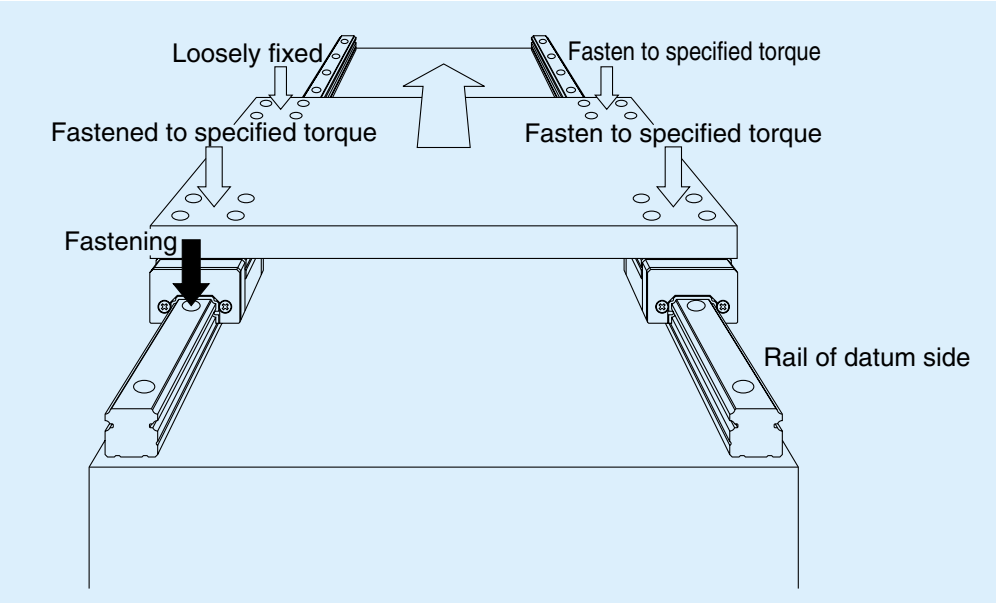

Fig. Ⅱ-9•18 Easy installation

www.bergab.ru Берг АБ bergab@ya.ru Тел. (495)-228-06-21, факс (495) 223-3071

www.bergab.ru Берг АБ bergab@ya.ru Тел. (495)-228-06-21, факс (495) 223-3071

(4) Various methods to press linear guide sideways

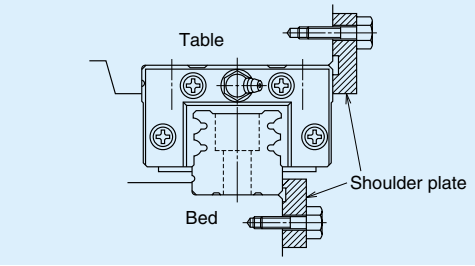

Fig. Ⅱ-9•19 Recommended method

- This method is most widely used, and generally recommended. The ball slide and the rail should protrude slightly from the sides of table and bed. The shoulder plate should have a recess, so the corners of the rail and ball slide do not touch the shoulder plate.

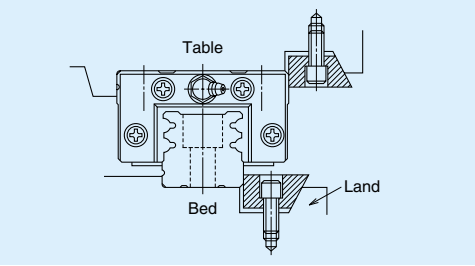

Fig. Ⅱ-9•20 Installation that requires caution

- A tapered block is squeezed in. But the slightest tightening of the bolt generates a large pressing force to the side. Too much tightening may cause the rail to deform, or the land (shown in the figure left) to warp to the right. This method requires caution.

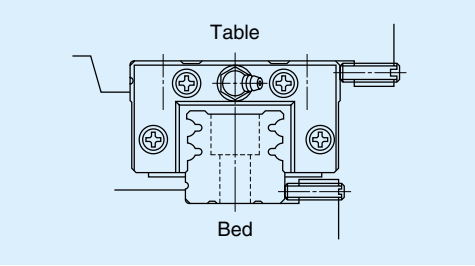

Fig. Ⅱ-9•21

- The bolt that presses rail must be thin due to limited space.

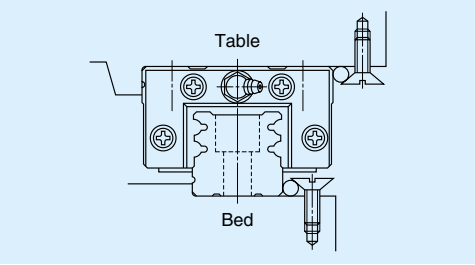

Fig. Ⅱ-9•22

- Press a needle-shape roller with a taper section of the head of a slotted pan head screw. Watch out for the position of the screw.

A-Ⅱ-9.4 Assemble Interchangeable Linear Guide

- Interchangeable ball slide is assembled on a provisinal rail (an inserting tool) when it is delivered (Fig. Ⅱ-9•23).
- NSK standard grease is packed into the ball slide, allowing immediate use.

Assembly procedures of interchangeable linear guide

Follow steps as described below.

① Wipe off the rust preventive oil from the rail and ball slide.

② Please match an groove mark for datum face of bearing with a rail to become an assembling state desired.

③ Align the provisional rail to the rail in the bottom and side faces. Press the provisional rail lightly against the rail, and move the ball slide over the rail (Fig. Ⅱ-9•23).

A-Ⅱ-9.5 Butting Rail Specification

- A rail which requires the length that exceeds manufactured maximum length comes in butting specification.
- The rail with butting specification are marked with alphabet (A, B, C ...) and an arrow on the opposite side of the mounting datum face. Use the alphabets and arrows for assembly order and direction of the rail (Fig. Ⅱ-9•25).
  The interchangeable rails for butting specification are only marked with the arrows.
- The pitch of the rail mounting hole on the butting section should be as F in Fig. Ⅱ-9•26. When two rails are used in parallel, the butted sections should not align. This is to avoid change in the running accuracy of the table at the butted sections.
- We recommend shifting the butting sections more than the length of a ball slide. If the higher running accuracy is required, consider installing the ball slides into the table so that they do not simultaneously pass the butting sections.

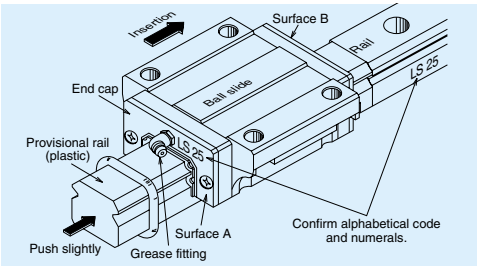

Fig. Ⅱ-9•23 Inserting interchangeable ball slide into the rail

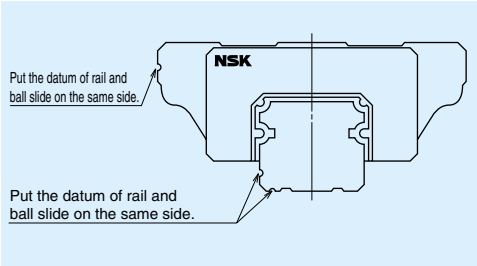

Fig. Ⅱ-9•24

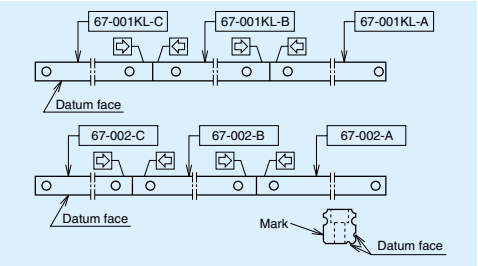

Fig. Ⅱ-9•25

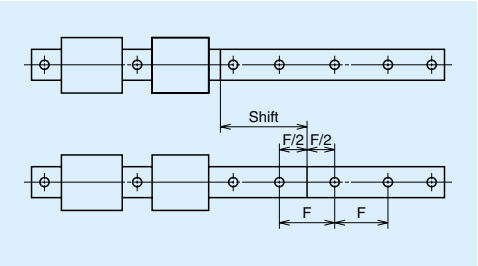

Fig. Ⅱ-9•26

www.bergab.ru Берг АБ bergab@ya.ru Тел. (495)-228-06-21, факс (495) 223-3071

www.bergab.ru Берг АБ bergab@ya.ru Тел. (495)-228-06-21, факс (495) 223-3071

A-Ⅱ-9.6 Handling Preloaded Assembly

- In case of the preloaded assembly (non interchangeable), do not remove ball slides from the rail as a general rule.
- If it is unavoidable to remove ball slide from the rail, make certain to use a provisional rail (a tool used to insert a ball slide to the rail) as shown in Fig. Ⅱ-9•27.
- Provisional rail for each model is in stock.
- Pay due attention to the assembly mark when returning the ball slide back to the rail. Follow the cautions described below.

Mark for assembling ball slide and rail

- Rails of preloaded assembly (not interchangeable) are marked with a reference number and a serial number on the opposite of the datum face.
- Ball slide to be combined are also marked with the same serial number (reference number is not marked).
- Furthermore, ball slides are marked with an arrow. Ball slides should be positioned with their arrows facing each other.
- In case that the ball slides had to be removed from the rail, confirm their serial numbers and the directions of arrows for re-assembly (Fig. Ⅱ-9•28).
- When two or more rails are used in a single set, serial numbers are in sequence if their reference numbers are the same. The linear guide with smallest serial number has the "KL" mark (Fig. Ⅱ-9•29).
- When two or more rails of different reference number are used in a single set, the rails and ball slides have the same serial number. In this case, when ball slide is removed from the rail, it is confusing which rail each ball slide was previously installed. When removing ball slides from the rail for an unavoidable reason (Fig. Ⅱ-9•30), sufficient precaution is required.

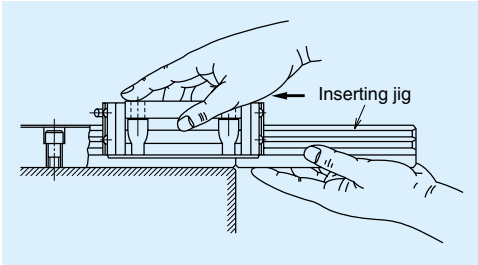

Fig. Ⅱ-9•27

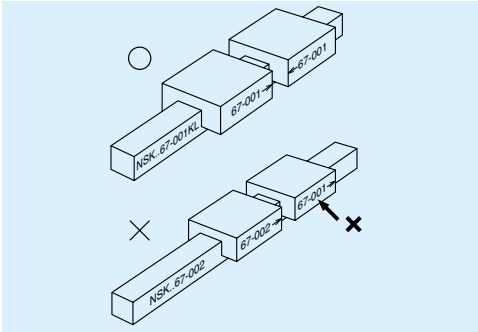

Fig. Ⅱ-9•28

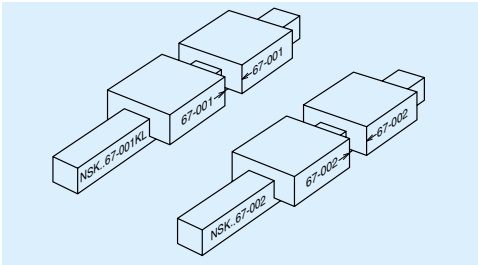

Fig. Ⅱ-9•29 When two rails have the same reference number

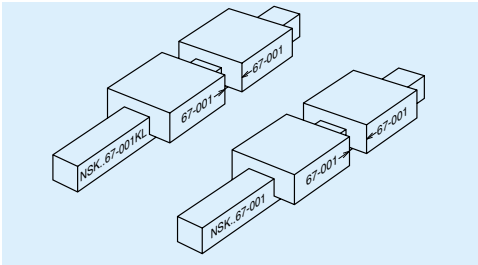

Fig. Ⅱ-9•30 When two rails have different reference number

A-Ⅱ-10 Drills to Select Linear Guide

A-Ⅱ-10.1 Single Axis Material Handling System

This section explains linear guide selection, life calculation, and deformation at load acting point for a single axis material handling system equipped with linear guide.

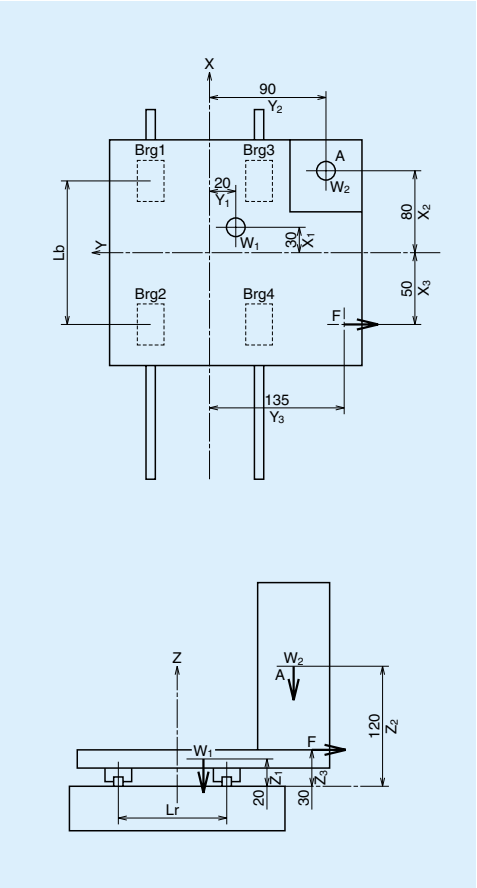

Fig. Ⅱ-10•1 Single axis material handling system

The work load is applied only to one way of stroke. Assume that the load is acting in full stroke as the condition of acting load is unknown.

Specification of Single axis material handling system

Table weight	W1	: 150 (N)
Weight of the work	W2	: 200 (N)
Acting load	F	: 200 (N)
Ball slide span	L_b	: 100 (mm)
Rail span	L_r	: 90 (mm)

Load point coordinates from the table center (mm)

Load	X coordinate	Y coordinate	Z coordinate
W1	30	– 20	20
W2	80	– 90	120
F	– 50	– 135	30

Stroke: 1000 mm

(1 cycle: 2000 mm)

Environment	: 10-30 (°C)
Travel speed	: 12 (m/min)
Time to reach travel speed	: 0.25 (sec)
Operating hour	: 16 (hr/day)

(1) Selection of linear guide model

Select a type of linear guide from "**A-Ⅰ-2.1 Types and Characteristics of Linear Guide**." Since this material handling system has 2 rails and 4 ball slides, **LH, LS, and LU Series** are suitable.

www.bergab.ru Берг АБ bergab@ya.ru Тел. (495)-228-06-21, факс (495) 223-3071

www.bergab.ru Берг АБ bergab@ya.ru Тел. (495)-228-06-21, факс (495) 223-3071

(2) Selection of size (model number)

Select a size (model number) from "**A-Ⅱ-3.2 Calculation of Life Expectancy (3) Calculating loads to a ball slide.**"

Calculating load *P* per ball slide

Find out potential coefficients ***Kp*1** (for vertical load W1), ***Kp*2** (for vertical load W2) and ***Kp*3** (load F right angle direction to the axis).

From load point coefficients, the potential coefficient ***Kp*1** of vertical direction load **W1** is:

$$Kp1=\left|\frac{X_1}{L_b}\right|+\left|\frac{Y_1}{L_r}\right|=\frac{30}{100}+\frac{20}{90}=0.52$$

From load point coefficients, the potential coefficient Kp2 of vertical load W2 is:

$$Kp2=\left|\frac{X_2}{L_b}\right|+\left|\frac{Y_2}{L_r}\right|=\frac{80}{100}+\frac{90}{90}=1.80$$

From load point coefficients, the potential coefficient F of lateral load is:

$$Kp3=\left|\frac{X_3}{L_b}\right|+\left|\frac{Z_3}{L_r}\right|=\frac{50}{100}+\frac{30}{90}=0.83$$

Therefore, **load *P*** per ball slide is:

$$\begin{aligned}P&=\sum\frac{F}{4}+\sum\frac{Kp\cdot F}{2}\\&=\frac{W1+W2+F}{4}+\frac{Kp1\cdot W1+Kp2\cdot W2+Kp3\cdot F}{2}\\&=\frac{150+200+200}{4}\\&\quad+\frac{0.52\times150+1.8\times200+0.83\times200}{2}\\&=439.5(N)\end{aligned}$$

Based on this, select **LU15AL** from "**Fig. Ⅰ-3•4 Selection based on the load** "

(3) Calculating life

Calculate life of the selected LU15AL based on "**A-Ⅱ-3.2 Calculation of Life Expectancy.**"

Linear guide LU15AL

Basic dynamic load rating : 5550 (N)
Basic static load rating : 6600 (N)

Load conditions of the linear guide

Table weight	W1	: 150 (N)
Weight of the work	W2	: 200 (N)
Applied load	F	: 200 (N)
Rail span	L_r	: 90 (mm)
Ball slide span	L_b	: 100 (mm)

From the time to reach travel speed and the travel speed, the table acceleration is 0.8m/sec^2. Therefore, it is not necessary to take into account inertial force brought about by table mass.

Calculation of the load applied to ball slide

Calculate two occasions:

1. There is the work mounted on the table.
2. No work mounted on the table.

From Pattern 4 in Table Ⅱ-3•2

There is a work mounted on the table
Vertical direction loads

$$\begin{aligned}M1&=\sum_{j=1}^{n}(F_{yj}\cdot Z_{yj})+\sum_{k=1}^{n}(F_{zk}\cdot Y_{zk})\\&=F\cdot Z_3+W1\cdot Y_1+W2\cdot Y_2\\&=-200\times30+150\times(-20)+200\times(-90)\\&=-27000\ (\text{N}\cdot\text{mm})\end{aligned}$$

$$\begin{aligned}M2&=\sum_{i=1}^{n}\{F_{xi}\cdot(Z_{xi}-Z_b)\}+\sum_{k=1}^{n}(F_{zk}\cdot X_{zk})\\&=W1\cdot X_1+W2\cdot X_2\\&=150\times30+200\times80\\&=20500\ (\text{N}\cdot\text{mm})\end{aligned}$$

$$\begin{aligned}F_{r1}&=\frac{\sum_{k=1}^{n}F_{zk}}{4}+\frac{M1}{2\cdot L}+\frac{M2}{2\cdot\ell}\\&=\frac{W1+W2}{4}+\frac{M1}{2\cdot L_r}+\frac{M2}{2\cdot L_b}\\&=\frac{150+200}{4}+\frac{-27000}{2\times90}+\frac{20500}{2\times100}\\&=40\ (\text{N})\end{aligned}$$

Similarly
F_{r2}= –165 (N)
F_{r3}= 340 (N)
F_{r4}= 135 (N)

Lateral direction loads

$$\begin{aligned}M3&=-\sum_{i=1}^{n}\{F_{xi}\cdot(Y_{xi}-Y_b)\}+\sum_{j=1}^{n}(F_{yj}\cdot X_{yj})\\&=F\cdot X_3\\&=-200\times(-50)\\&=10000\ (\text{N}\cdot\text{mm})\end{aligned}$$

$$\begin{aligned}F_{s1}=F_{s3}&=\frac{\sum_{j=1}^{n}F_{yj}}{4}+\frac{M3}{2\cdot\ell}\\&=\frac{F}{4}+\frac{M3}{2L_b}\\&=\frac{-200}{4}+\frac{10000}{2\times100}\\&=0\ (\text{N})\end{aligned}$$

Similarly
$F_{s2}=F_{s4}=-100$ (N)

No work mounted on the table
Vertical direction load

$$\begin{aligned}M1&=\sum_{j=1}^{n}(F_{yj}\cdot Z_{yj})+\sum_{k=1}^{n}(F_{zk}\cdot Y_{zk})\\&=F\cdot Z_3+W1\cdot Y_1\\&=-200\times30+150\times(-20)\\&=-9000\ (\text{N}\cdot\text{mm})\end{aligned}$$

$$\begin{aligned}M2&=\sum_{i=1}^{n}\{F_{xi}(Z_{xi}-Z_b)\}+\sum_{k=1}^{n}(F_{zk}\cdot X_{zk})\\&=W1\cdot X_1\\&=150\times30\\&=4500\ (\text{N}\cdot\text{mm})\end{aligned}$$

$$\begin{aligned}F_{r1}&=\frac{\sum_{k=1}^{n}F_{zk}}{4}+\frac{M1}{2\cdot L}+\frac{M2}{2\cdot\ell}\\&=\frac{W1}{4}+\frac{M1}{2\cdot L_r}+\frac{M2}{2\cdot L_b}\\&=\frac{150}{4}+\frac{-9000}{2\times90}+\frac{4500}{2\times100}\\&=10\ (\text{N})\end{aligned}$$

Similarly
F_{r2}= –35 (N)
F_{r3}= 110 (N)
F_{r4}= 65 (N)

Lateral direction loads

$$\begin{aligned}M3&=-\sum_{i=1}^{n}\{F_{xi}\cdot(Y_{xi}-Y_b)\}+\sum_{j=1}^{n}(F_{yj}\cdot X_{yj})\\&=F\cdot X_3\\&=-200\times(-50)\\&=10000\ (\text{N}\cdot\text{mm})\end{aligned}$$

$$\begin{aligned}F_{s1}=F_{s3}&=\frac{\sum_{j=1}^{n}F_{yj}}{4}+\frac{M3}{2\cdot\ell}\\&=\frac{F}{4}+\frac{M3}{2\cdot L_b}\\&=\frac{-200}{4}+\frac{10000}{2\times100}\\&=0\ (\text{N})\end{aligned}$$

Similarly
$F_{s2}=F_{s4}=-100$ (N)

For calculation, take into consideration the positive or negative signs (+, -) for load point coordinate.

www.bergab.ru Берг АБ bergab@ya.ru Тел. (495)-228-06-21, факс (495) 223-3071

www.bergab.ru Берг АБ bergab@ya.ru Тел. (495)-228-06-21, факс (495) 223-3071

Calculation of dynamic equivalent load

Use "A-Ⅱ-3.2 (4) Calculation of dynamic equivalent load."

It matches Position 4 in "**Table Ⅱ-3•3 Loads in the arrangement of linear guides.**" Ball slide loads that must be considered are vertical and lateral direction loads.

In case of LU15AL,

Vertical direction dynamic equivalent load

$$F_r = F_r$$

Lateral direction dynamic equivalent load

$$F_{se} = F_s \tan\alpha = F_s$$

Use the formula for full dynamic equivalent load (Page A173) to calculate F_e.

Results are shown in the table below.

Unit: N

Work mounted	Brg1	Brg2	Brg3	Brg4
F_r (F_{r1}～F_{r4})	40	– 165	340	135
F_{se} (F_{s1}～F_{s4})	0	– 100	0	– 100
F_e	40	215	340	185
No work mounted	**Brg1**	**Brg2**	**Brg3**	**Brg4**
F_r (F_{r1}～F_{r4})	10	– 35	110	65
F_{se} (F_{s1}～F_{s4})	0	– 100	0	– 100
F_e	10	118	110	133

Based on the results of calculations, a ball slide that bears the maximum dynamic equivalent load shall be taken as the representative of the linear guides for further life calculation. For this case, we take the Brg3.

Therefore;

Work mounted F_{e1} = 340 (N)

No work mounted F_{e2} = 110 (N)

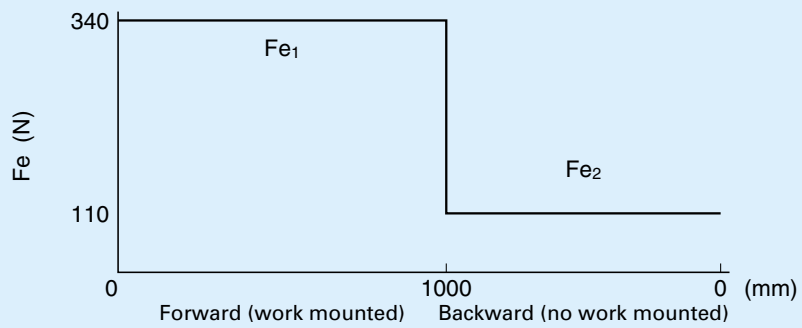

Cycle patterns of full dynamic equivalent load

Calculation of mean effective load

Based on "**A-Ⅱ-3.2 (5) Calculation of mean effective load,**" calculate from the largest full dynamic equivalent loads.

From the cycle pattern, the mean effective load matches "① **When load and running distance vary by phase.**" Therefore, use the following formula.

Assuming that L is: $L = L_1 + L_2$.

$$Fm = \sqrt[3]{\frac{1}{L}\left(F_{e1}^3 L_1 + F_{e2}^3 L_2\right)}$$

$$= \sqrt[3]{\frac{1}{2000}\left(340^3 \times 1000 + 110^3 \times 1000\right)}$$

$$= 273 \text{ (N)}$$

Determine various coefficients

Determine applicable coefficients from "**A-Ⅱ-3.2 (6) Various coefficients.**"

Load factors

Use conditions are: Travel speed -- 12 m/min; Acceleration -- 0.8m/ sec^2 (0.082G). As the load factor f_w is in the range of 1.0 ~ 1.5, use common value f_w **= 1.2**.

Hardness coefficient

The hardness of NSK linear guides is HRC58 ~ 62. Use a hardness coefficient f_H**= 1** and take the value of basic dynamic load rating as it is.

Calculate rating life

Use "**A-Ⅱ-3.2 (7) Calculation of rating life.**"

Linear guide LU15AL's basic dynamic load rating C : 5550 (N)

Mean effective load F_m : 273 (N)

Load factor f_w : 1.2

Hardness coefficient f_H : 1

Rating fatigue life $L = 50 \times \left[\frac{f_H \cdot C}{f_w \cdot F_m}\right]^3$

$$= 50 \times \left[\frac{1 \times 5550}{1.2 \times 273}\right]^3$$

=approximately 243110 (km)

Travel speed: 12 m/min; Operating hours: 16hr/day.

Convert the above rating fatigue life into hours:

$$\frac{243110 \times 1000}{12 \times 60 \times 16} = \text{approximately 21100 (days)}$$

Examine static load

Based on "**A-Ⅱ-3.2 (8) Examination of static load,**" find out on which ball slide the static equivalent load P_0 becomes largest.

Linear guide LU15AL's basic static load rating C_0: 6600 (N)

Ball slide No. 3 bears the largest load.

P_0 at this time:

$$P_0 = F_r + F_s = 340$$

Therefore, static permissible load coefficient f_s is:

$$f_s = \frac{C_0}{P_0} = \frac{6600}{340} = 19.4$$

There is no problem at this value.

(4) Selection of accuracy grade and preload

Based on "**A-Ⅰ-3.4 (2) Application examples of accuracy grade and preload,**" select accuracy grade PN and preload Z1 for material handling system.

(5) Calculation of deformation

Calculate deformation by the weight of the mounted work W2. From "**Table Ⅱ-2•11**" in "**A-Ⅱ-2 Preload and Rigidity,**" the rigidity of linear guide LU15AL with Z1 preload is:

$$K_s = K_r = 45 \text{ (N / } \mu\text{m)} = 45000 \text{ (N / mm)}$$

Deformation by the weight of the mounted work W_2 can be obtained as the difference in deformation when W_2 applies or does not apply.

From Pattern 4 in Table Ⅱ-3•2 (Page A168)

Work mounted:

$$\delta_{x1} = Y_d \cdot \frac{F_{s2} - F_{s1}}{L_b \cdot K_s} + Z_d \cdot \frac{F_{r1} - F_{r2}}{L_b \cdot K_r}$$

$$= -90 \times \frac{-100 - 0}{100 \times 45000} + 120 \times \frac{40 - (-165)}{100 \times 45000}$$

$$= 0.0075 \text{ (mm)} = 7.5 \ (\mu\text{m})$$

Similarly, δ_{y1} = – 0.0082 (mm) = – 8.2 (μ m)

δ_{z1} = 0.0123 (mm) = 12.3 (μ m)

www.bergab.ru Берг АБ bergab@ya.ru Тел. (495)-228-06-21, факс (495) 223-3071

www.bergab.ru Берг АБ bergab@ya.ru Тел. (495)-228-06-21, факс (495) 223-3071

No work mounted:

$$\delta_{x2} = Y_d \cdot \frac{F_{s2} - F_{s1}}{L_b \cdot K_s} + Z_d \cdot \frac{F_{r1} - F_{r2}}{L_b \cdot K_r}$$

$$= -90 \times \frac{-100 - 0}{100 \times 45000} + 120 \times \frac{10 - (-35)}{100 \times 45000}$$

$$= 0.0032 (\text{mm}) = 3.2 (\mu\text{m})$$

Similarly, δ_{y2}=–0.0023 (mm) =–2.3 (μm)

δ_{z2}= 0.0039 (mm) = 3.9 (μm)

Therefore, the difference in deformation by whether there is a mounted work or not is as follows:

$\delta_x = \delta_{x1} - \delta_{x2}$=	7.5	–3.2	= 4.3 (μm)
$\delta_y = \delta_{y1} - \delta_{y2}$=	–8.2	–(–2.3)	=–5.9 (μm)
$\delta_z = \delta_{z1} - \delta_{z2}$=	12.3	–3.9	= 8.4 (μm)

A-Ⅱ-10.2 Machining Center

The following is a case calculation for a horizontal type machining center. Arrangements of each axis are shown in Fig. Ⅱ-10•2 and Fig. Ⅱ-10•3.

Operating conditions

Dimensions and load conditions are:

X axis column's weight	*Wx*	: 7500 (N)
Y axis spindle head's weight	*Wy*	: 2500 (N)
Z axis table's weight	*Wz*	: 5500 (N)
X axis rail span	XL_r	: 450 (mm)
X axis ball slide span	XL_b	: 310 (mm)
Y axis rail span	YL_r	: 410 (mm)
Y axis ball slide span	YL_b	: 308 (mm)
Z axis rail span	ZL_r	: 660 (mm)
Z axis ball slide span	ZL_b	: 420 (mm)

X axis stroke : 400 (mm)
Y axis stroke : 350 (mm)
Z axis stroke : 500 (mm)

Average rapid traverse speed : 15 (m/min)
(Max. 30 (m/min))
Starting accelerating speed : 1 (G)
Milling speed : 2.5 (m/min)
Drilling speed : 0.8 (m/min)

Cutting load

Milling process	*Fx*=*Fy*=	1000 (N)
Drilling process	*Fz*=	3000 (N)

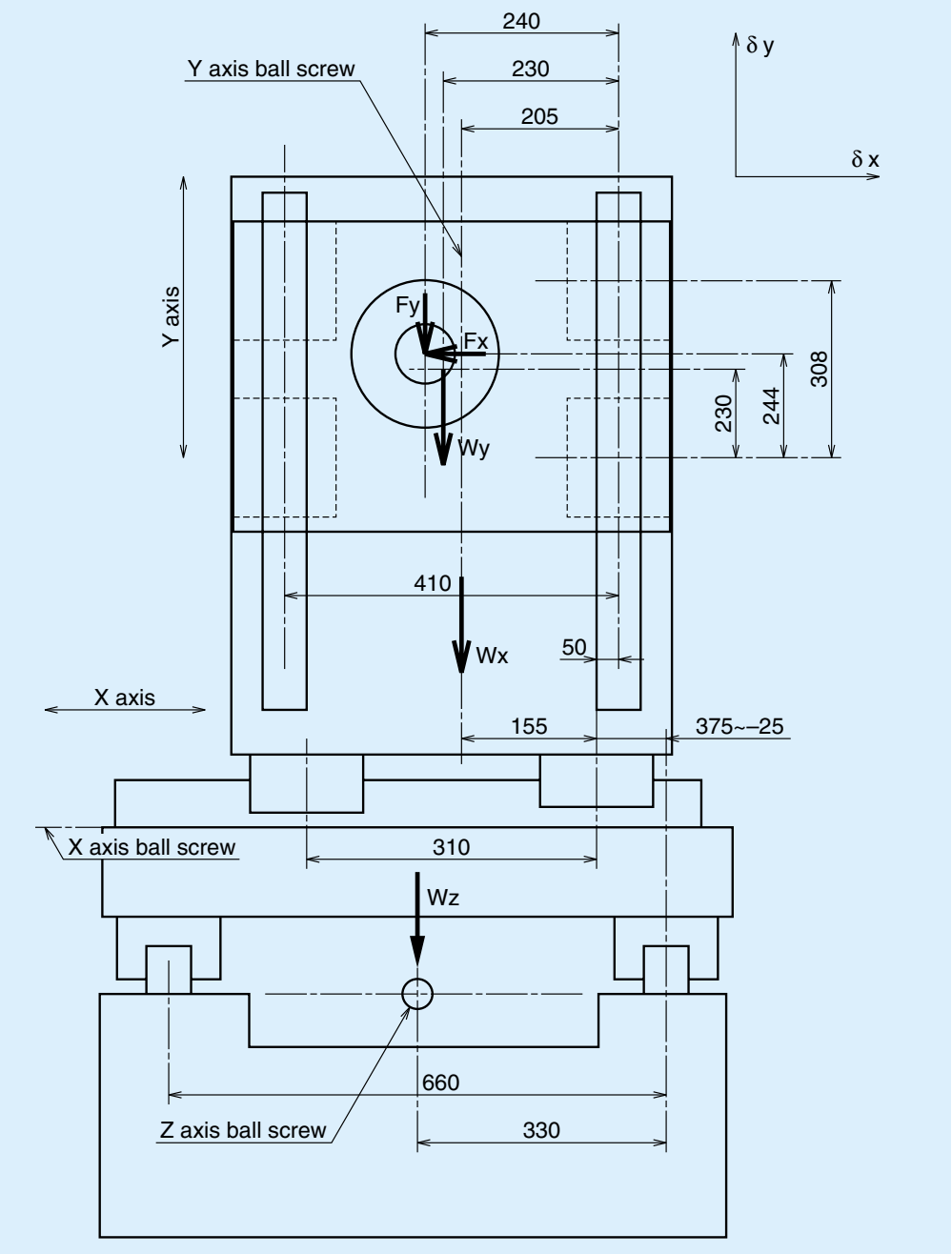

Fig. Ⅱ-10•2 Machining center (front view)

www.bergab.ru Берг АБ bergab@ya.ru Тел. (495)-228-06-21, факс (495) 223-3071

www.bergab.ru Берг АБ bergab@ya.ru Тел. (495)-228-06-21, факс (495) 223-3071

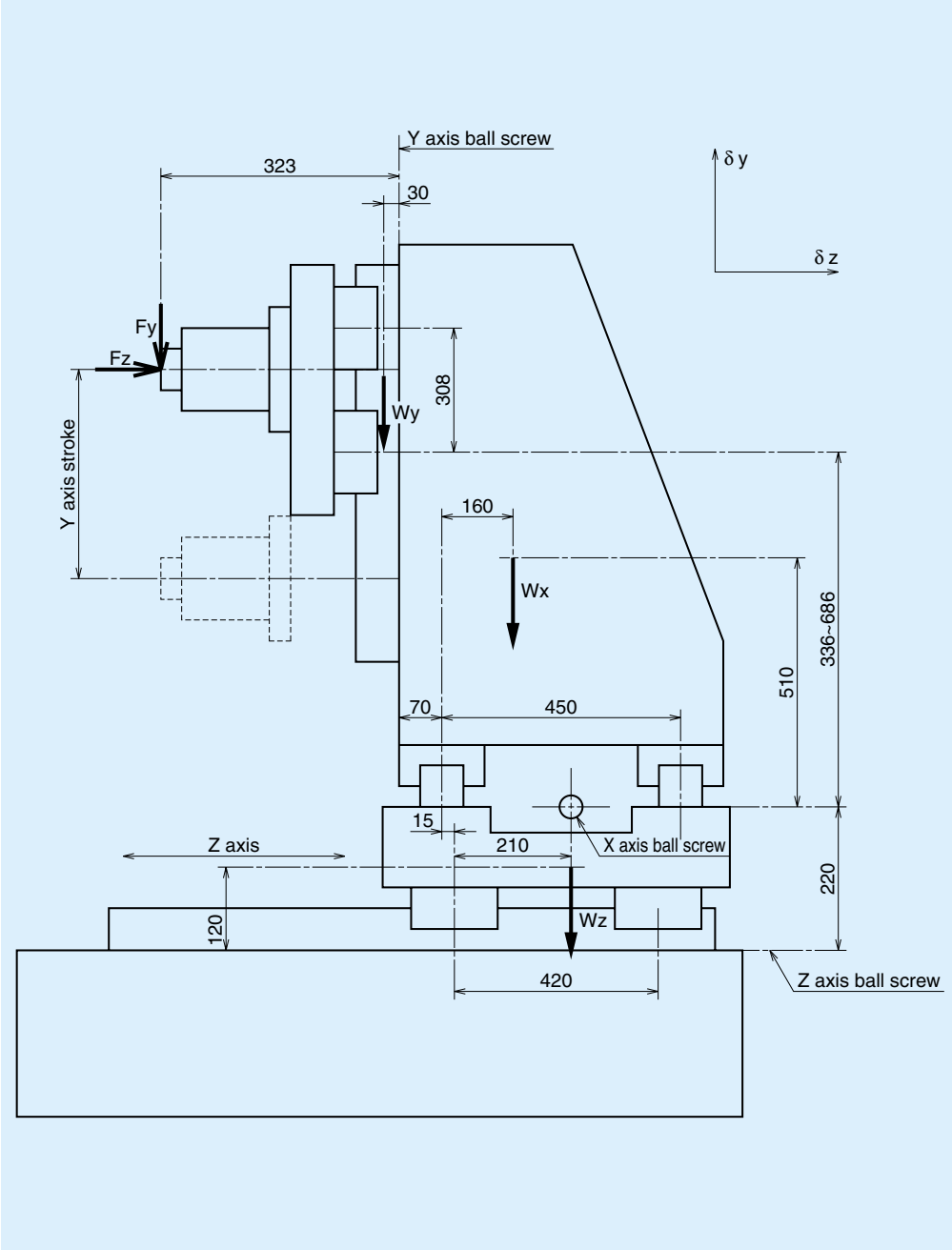

Fig. Ⅱ-10•3 Machining center (side view)

(1) Selection of linear guide model

From the operating conditions, the linear guide should be LY Series which is suitable for the machining center.

(2) Selection of linear guide size (model number)

Start selection from Y axis which has fewer acting loads.

Coordinates of load points are as follows.

Wy **(X_{WY}, Y_{WY}, Z_{WY}) = (– 25, 76, – 30)(mm)**
Fx **(X_{FX}, Y_{FX}, Z_{FX}) = (– 35, 90, – 323)(mm)**
Fy **(X_{FY}, Y_{FY}, Z_{FY}) = (– 35, 90, – 323)(mm)**
Fz **(X_{FZ}, Y_{FZ}, Z_{FZ}) = (– 35, 90, – 323)(mm)**
Ball slide span : YL_b = 308 mm
Rail span : YL_r = 410 mm

First, find out the **load volume *P*** per ball slide in milling process (***Pyf***) and drilling process (***Pyd***). Refer to "**A-Ⅰ-3.2 Selection of linear guide size (model code)**."

Position coefficients at time of milling process (*Wy*, *Fx* and *Fy* must be considered.)

Regarding *Wy*: From load application coordinates

$$Kpy1 = \left|\frac{Z_{WY}}{YL_b}\right| + \left|\frac{X_{WY}}{YL_b}\right| = \frac{30}{308} + \frac{25}{308} = 0.10 + 0.08 = 0.18$$

Regarding *Fx*: From load point coordinates

$$Kpy2 = \left|\frac{Y_{FX}}{YL_b}\right| + \left|\frac{Z_{FY}}{YL_b}\right| = \frac{90}{308} + \frac{323}{410} = 0.29 + 0.79 = 1.08$$

Regarding *Fy*: From load point coordinates

$$Kpy3 = \left|\frac{Z_{FY}}{YL_b}\right| + \left|\frac{X_{FY}}{YL_b}\right| = \frac{323}{308} + \frac{35}{308} = 1.05 + 0.11 = 1.16$$

Therefore, **load volume Pfy is**:

$$Pyf = \sum\frac{F}{4} + \sum\frac{Kp \cdot F}{2}$$
$$= \frac{Wy + Fx + Fy}{4} + \frac{Kpy1 \cdot Wy + Kpy2 \cdot Fx + Kpy3 \cdot Fy}{2}$$
$$= \frac{2500 + 1000 + 1000}{4} + \frac{0.18 \times 2500 + 1.08 \times 1000 + 1.16 \times 1000}{2}$$
$$= 2470\ (N)$$

Position coefficients at time of drilling processing (*Wy* and *Fz* must be considered.)

Regarding Wy, as in the case for milling process,

$Kpy1 = 0.18$

Regarding *Fz*: From load point coefficient

$$Kpy4 = \left|\frac{Y_{FZ}}{YL_b}\right| + \left|\frac{X_{FZ}}{YL_r}\right| = \frac{90}{308} + \frac{35}{410} = 0.29 + 0.09 = 0.38$$

Therefore, **load volume Pyd** is:

$$Pyd = \sum\frac{F}{4} + \sum\frac{Kp \cdot F}{2}$$
$$= \frac{Wy + Fz}{4} + \frac{Kpx1 \cdot Wy + Kpy4 \cdot Fz}{2}$$
$$= \frac{2500 + 3000}{4} + \frac{0.18 \times 2500 + 0.38 \times 3000}{2}$$
$$= 2170\ (N)$$

From the above results, for milling process with large values, select a model LY 35 from Fig. Ⅰ-3•4. for Y axis.

Next, determine the linear guide size for X axis. As with Y axis, the distance from the center of the table to the loads and their load points are shown. The stroke position on Y axis is the top point which imposes strict condition.

Wx **(X_{WX}, Y_{WX}, Z_{WX}) = (0, 510, – 65) (mm)**
Wy **(X_{WY}, Y_{WY}, Z_{WY}) = (– 25, 916, – 325) (mm)**
Fx **(X_{FX}, Y_{FX}, Z_{FX}) = (– 35, 930, – 618) (mm)**
Fy **(X_{FY}, Y_{FY}, Z_{FY}) = (– 35, 930, – 618) (mm)**
Fz **(X_{FZ}, Y_{FZ}, Z_{FZ}) = (– 35, 930, – 618) (mm)**
Ball slide span : YL_b = 310 (mm)
Rail span : YL_r = 450 (mm)

Also, determine per-ball slide load volume ***Pxf*** **and *Pxd*.**

Position coefficients at time of milling process (*Wx*, *Wy*, *Fx* and *Fy* must be considered)

Regarding *Wx*: From load point coordinates

$$Kpx1 = \left|\frac{X_{WX}}{XL_b}\right| + \left|\frac{Z_{WX}}{XL_r}\right| = \frac{0}{310} + \frac{65}{450} = 0 + 0.14 = 0.14$$

Regarding *Wy*: From load point coordinates

$$Kpx2 = \left|\frac{X_{WY}}{XL_b}\right| + \left|\frac{Z_{WY}}{XL_r}\right| = \frac{25}{310} + \frac{325}{450} = 0.08 + 0.72 = 0.8$$

Regarding *Fx*: From load point coordinates

$$Kpx3 = \left|\frac{Y_{FX}}{XL_b}\right| + \left|\frac{Z_{FX}}{XL_b}\right| = \frac{930}{310} + \frac{618}{310} = 3.00 + 1.99 = 4.99$$

Regarding *Fy*: From load point coordinates

$$Kpx4 = \left|\frac{X_{FY}}{XL_b}\right| + \left|\frac{Z_{FY}}{XL_r}\right| = \frac{35}{310} + \frac{618}{450} = 0.11 + 1.37 = 1.48$$

Therefore,

www.bergab.ru Берг АБ bergab@ya.ru Тел. (495)-228-06-21, факс (495) 223-3071

www.bergab.ru Берг АБ bergab@ya.ru Тел. (495)-228-06-21, факс (495) 223-3071

$$Pxf = \sum\frac{F}{4} + \sum\frac{Kp\cdot F}{2}$$
$$= \frac{Wx + Wy + Fx + Fy}{4}$$
$$+ \frac{Kpx1\cdot Wx + Kpx2\cdot Wy + Kpx3\cdot Fx + Kpx4\cdot Fy}{2}$$
$$= \frac{7500+2500+1000+1000}{4}$$
$$+ \frac{0.14\times 7500 + 0.8\times 2500 + 4.99\times 1000 + 1.48\times 1000}{2}$$
$$= 7760\ (N)$$

Position coefficients at time of drilling process (Wx, Wy and *Fz* must be considered)

Regarding *Wx*: *K*px1=0.14
(same as milling process)

Regarding *Wy*: *K*px2=0.80
(same as milling process)

Regarding *Fz*: From the load point coordinates

$$Kpx5 = \left|\frac{X_{FZ}}{XL_b}\right| + \left|\frac{Y_{FZ}}{XL_r}\right| = \frac{35}{310} + \frac{930}{450} = 0.11 + 2.07 = 2.18$$

Therefore,

$$Pxd = \sum\frac{F}{4} + \sum\frac{Kp\cdot F}{2}$$
$$= \frac{Wx + Wy + Fz}{4}$$
$$+ \frac{Kpx1\cdot Wx + Kpx2\cdot Wy + Kpx5\cdot Fz}{2}$$
$$= \frac{7500+2500+3000}{4}$$
$$+ \frac{0.14\times 7500 + 0.8\times 2500 + 2.18\times 3000}{2}$$
$$= 8045\ (N)$$

From the above results, for drilling process with large values, select a model from Fig. Ⅰ-3•4. and LY55 is chosen for X axis.

Finally, determine Z axis. Similarly, the distance from the center of the table to the loads and their loading points are shown. The stroke positions on Y and X axes are at stroke end which imposes strict condition.

Wx (X_{WX}, Y_{WX}, Z_{WX}) = (– 200, 730, – 65) (mm)
Wy (X_{WY}, Y_{WY}, Z_{WY}) = (– 225, 1136, – 325) (mm)
Wz (X_{WZ}, Y_{WZ}, Z_{WZ}) = (0, 120, 0) (mm)
Fx (X_{FX}, Y_{FX}, Z_{FX}) = (– 235, 1150, – 618) (mm)
Fy (X_{FY}, Y_{FY}, Z_{FY}) = (– 235, 1150, – 618) (mm)
Fz (X_{FZ}, Y_{FZ}, Z_{FZ}) = (– 235, 1150, – 618) (mm)

Ball slide span : ZL_b = 420 (mm)
Rail span : ZL_r = 660 (mm)
Determine per-ball slide lode volume Pzf, Pzd
Position coefficients at time of milling process (*Wx*, *Wy*, *Wz*, *Fx* and *Fy* must be considered)

Regarding *Wx*: From load point coordinates

$$Kpz1 = \left|\frac{Z_{WX}}{ZL_b}\right| + \left|\frac{X_{WX}}{ZL_r}\right| = \frac{65}{420} + \frac{200}{660} = 0.15 + 0.30 = 0.45$$

Regarding *Wy*: From load point coordinates

$$Kpz2 = \left|\frac{Z_{WY}}{ZL_b}\right| + \left|\frac{X_{WY}}{ZL_r}\right| = \frac{325}{420} + \frac{225}{660} = 0.77 + 0.34 = 1.11$$

Regarding *Wz*: From load point coordinates

$$Kpz3 = \left|\frac{Z_{WZ}}{ZL_b}\right| + \left|\frac{X_{WZ}}{ZL_r}\right| = \frac{0}{420} + \frac{0}{660} = 0 + 0 = 0$$

Regarding *Fx*: From load point coordinates

$$Kpz4 = \left|\frac{Z_{FX}}{ZL_b}\right| + \left|\frac{Y_{FX}}{ZL_r}\right| = \frac{618}{420} + \frac{1150}{660} = 1.47 + 1.74 = 3.21$$

Regarding *Fy*: From load point coordinates

$$Kpx4 = \left|\frac{Z_{FY}}{ZL_b}\right| + \left|\frac{X_{FY}}{ZL_r}\right| = \frac{618}{420} + \frac{235}{660} = 1.47 + 0.36 = 1.83$$

Therefore,

$$Pzf = \sum\frac{F}{4} + \sum\frac{Kp\cdot F}{2}$$
$$= \frac{Wx + Wy + Wz + Fx + Fy}{4}$$
$$+ \frac{Kpz1\cdot Wx + Kpz2\cdot Wy + Kpz3\cdot Wz + Kpz4\cdot Fx + Kpz5\cdot Fy}{2}$$
$$= \frac{7500+2500+5500+1000+1000}{4}$$
$$+ \frac{0.45\times 7500 + 1.11\times 2500 + 0\times 5500 + 3.21\times 1000 + 1.83\times 1000}{2}$$
$$= 9970\ (N)$$

Position coefficients at time of drilling process (*Wx*, *Wy*, *Wz* and *Fz* must be considered)

Regarding *Wx*: *K*pz1 = 0.45
Regarding *Wy*: *K*pz2 = 1.11
Regarding *Wz*: *K*pz3 = 0
Regarding *Fz*: From the load point coordinates

$$Kp6 = \left|\frac{Y_{FZ}}{ZL_b}\right| + \left|\frac{X_{FZ}}{ZL_b}\right| = \frac{1150}{420} + \frac{235}{420} = 2.74 + 0.56 = 3.30$$

Therefore,

$$Pzd = \sum\frac{F}{4} + \sum\frac{Kp\cdot F}{2}$$
$$= \frac{Wx + Wy + Wz + Fz}{4}$$
$$+ \frac{Kpz1\cdot Wx + Kpz2\cdot Wy + Kpz3\cdot Wz + Kpz6\cdot Fz}{2}$$
$$= \frac{7500+2500+5500+3000}{4}$$
$$+ \frac{0.45\times 7500 + 1.11\times 2500 + 0\times 5500 + 3.30\times 3000}{2}$$
$$= 12650\ (N)$$

From the above results, for drilling process with large values, select a model LY 65 from Fig. Ⅰ-3•4. for Z axis.
The selected linear guides are:

X axis LY55
Y axis LY35
Z axis LY65

(3) Calculation of life expectation

Examination shall be done in three cases, no cutting load; milling process; and drilling process. Inertial force associated with the starting acceleration is not considered in this case. But it must be calculated for more accurate figures.

Calculation of the loads that apply to the ball slide

In case of no cutting load: *Fx* = *Fy* = *Fz* = 0

Calculate load on X, Y, Z axes using **"Table Ⅱ-3•1"** in **"A-Ⅱ-3.2 (3) Calculating load to a ball slide."**

X axis: Loads to consider *Wx*, and *Wy*
Y axis: Loads to consider *Wy*
Z axis: Loads to consider *Wx*, *Wy*, and *Wz*

The table below shows calculation of each load coordinates at stroke end which imposes most strict condition.

Unit: N

Axis	Load direction	Brg1	Brg2	Brg3	Brg4
X axis	Vertical direction F_r	1156	955	4045	3844
	Lateral direction F_s	0	0	0	0
Y axis	Vertical direction F_r	122	– 122	122	– 122
	Lateral direction F_s	102	– 102	102	– 102
Z axis	Vertical direction F_r	765	3860	3890	6985
	Lateral direction F_s	0	0	0	0

In case of milling process: *Fx* = *Fy* = 1000 (N)

Similarly,

X axis: Loads to consider *Wx*, *Wy*, *Fx*, and *Fy*
Y axis: Loads to consider *Wy*, *Fx*, and *Fy*
Z axis: Loads to consider *Wx*, *Wy*, *Wz*, *Fx*, and *Fy*

The table below shows calculation of each load coordinates at stroke end which imposes most strict condition.

Unit: N

Axis	Load direction	Brg1	Brg2	Brg3	Brg4
X axis	Vertical direction F_r	2277	– 1039	6539	3224
	Lateral direction F_s	997	– 997	997	– 997
Y axis	Vertical direction F_r	252	– 1040	1040	– 252
	Lateral direction F_s	54	– 554	54	– 554
Z axis	Vertical direction F_r	– 771	3796	4453	9020
	Lateral direction F_s	486	– 986	486	– 986

www.bergab.ru Берг АБ bergab@ya.ru Тел. (495)-228-06-21, факс (495) 223-3071

www.bergab.ru Берг АБ bergab@ya.ru Тел. (495)-228-06-21, факс (495) 223-3071

In case of drilling process: *Fz* = 3000 (N)

X axis: Loads to consider *W*x, *W*y, and *F*z

Y axis: Loads to consider *W*y, and *F*z

Z axis: Loads to consider *W*x, *W*y, *W*z, and *F*z

The table below shows calculation of each load coordinates at a stroke end which imposes most strict condition.

Unit: N

Axis	Load direction	Brg1	Brg2	Brg3	Brg4
X axis	Vertical direction F_r	4256	4055	945	744
	Lateral direction F_s	919	581	919	581
Y axis	Vertical direction F_r	305	938	561	1195
	Lateral direction F_s	102	– 102	102	– 102
Z axis	Vertical direction F_r	4872	– 247	7997	2878
	Lateral direction F_s	839	– 839	839	– 839

Calculation of dynamic equivalent load

Next, find dynamic equivalent load under each cutting condition. From "Table Ⅱ-3•2" in "**A-Ⅱ-3.3 (4) Calculation of dynamic equivalent load,**" necessary load *F*r, *F*se are, as the linear guide model is LY Series, obtained as follows.

Vertical dynamic equivalent load

Fr* = *Fr

Lateral dynamic equivalent load

Fse* = *Fs* • tan α = *Fs

From above, calculate *F*e using formulas for full dynamic equivalent loads shown in Page A173. From calculation, the largest full dynamic equivalent loads are as follows.

	Largest full dynamic equivalent load *F*e (N)		
	No cutting load	For milling process	For drilling process
X axis	4045	7038	4716
Y axis	173	1317	1246
Z axis	6985	9513	8417

Calculation of mean effective load

Calculate the mean effective loads from full dynamic equivalent loads. If duty cycle in the cutting process is not clear, set at 70% of the largest full dynamic equivalent load in all processes.Therefore,

X axis: 7038 x 0.7 = 4927 (N)

Y axis: 1317 x 0.7 = 922 (N)

Z axis: 9513 x 0.7 = 6659 (N)

Determine various coefficients

Determine based on "**A-Ⅱ-3.2 (6) Various coefficients.**"

In this occasion,

Load coefficient f_W: 1.5

Hardness coefficient f_H: 1

Calculation of rating life

Based on the calculated loads and various coefficients, calculate life from "**A-Ⅱ-3.2 (7) Calculation of rating life.**"

Basic dynamic load rating C

(X axis linear guide LY 55): 103000 (N)

Basic dynamic load rating C

(Y axis linear guide LY 35): 46000 (N)

Basic dynamic load rating C

(Z axis linear guide LY 65): 212000 (N)

Load coefficient f_W: 1.5

Hardness coefficient f_H: 1

Rating fatigue life $L=50\times\left[\frac{f_H \cdot C}{f_w \cdot F_m}\right]^3$

From this,

In case of X axis *Lx* = 135350 (km)

In case of Y axis *Ly* =1839800 (km)

In case of Z axis *Lz* = 478050 (km)

Examination of static loads based on "A-Ⅱ-3.2 (8)"

Basic static load rating C_0

(X axis linear guide LY 55): 165000

Basic static load rating C_0

(Y axis linear guide LY 35): 75000 (N)

Basic static load rating C_0

(Z axis linear guide LY 65): 340000 (N)

Examine for milling process with large load.

X axis $f_s = \frac{C_0}{P_0} = \frac{C_0}{(F_r + F_s)} = \frac{165000}{(6539 + 997)} = 21.9$

Similarly,

Y axis f_s = 47.0

Z axis f_s = 34.0

Therefore, there is no problem.

(4) Selection of accuracy grade and preload

For machining center, select accurate grade P5, and Preload Z3.

(5) Calculation of deformation

Calculate deformation at processing points (stroke position is the stroke end positions on Y axis and X axis)

Rigidity of X axis linear guide LY55Z3 : 880 (N/ μ m)

Rigidity of Y axis linear guide LY35Z3 : 580 (N/ μ m)

Rigidity of Z axis linear guide LY65Z3 : 1340 (N/ μ m)

Calculate using Pattern 4 in Table Ⅱ-3•1.

Load conditions	Deformation direction	Deformation of each axis (μm)			Total deformation (μm)
		X axis	Y axis	Z axis	
Table weight alone	δx	–0.7	–0.1	–4.1	–4.9
	δy	–7.4	–0.5	–7.1	–15.0
	δz	–6.8	–0.1	–6.3	–13.2
Milling process	δx	–15.8	–1.8	–8.6	–26.2
	δy	–10.2	–2.5	–9.5	–22.2
	δz	–9.8	–0.5	–8.7	–19.0
Drilling process	δx	–1.5	–0.4	–5.9	–7.8
	δy	2.3	1.1	1.9	5.3
	δz	8.7	1.6	11.2	21.5

www.bergab.ru Берг АБ bergab@ya.ru Тел. (495)-228-06-21, факс (495) 223-3071

www.bergab.ru Берг АБ bergab@ya.ru Тел. (495)-228-06-21, факс (495) 223-3071

Therefore, deformation at processing points at time of milling is:

$\delta x = -26.2 - (-4.9) = -21.3$ (μm)

$\delta y = -22.2 - (-15.0) = -7.2$ (μm)

$\delta z = -19.0 - (-13.2) = -5.8$ (μm)

Deformation at processing points at time of milling:

$\delta x = -7.8 - (-4.9) = -2.9$ (μm)

$\delta y = 5.3 - (-15.0) = 20.3$ (μm)

$\delta z = 21.5 - (-13.2) = 34.7$ (μm)

If a life of this long period is not required, select a smaller linear guide model, and calculate life again.
To reduce deformation at processing point, select a linear guide model with higher rigidity. Then calculate life again.

A-Ⅱ-11 Reference

The articles in "Motion & Control (NSK Technical Journals)" which refer to NSK linear guides are listed in the table below for user convenience.
"Motion & Control" is compiled to introduce NSK products and its technologies.
For inquiries and orders of "Motion & Controls," please contact your local NSK sales offices, or representatives.

Table Ⅱ-11•1 Motion & Control (NSK Technical Journal): Articles relating to linear guides (1997 ~)

Issue No.	Date of Publication	Articles related to linear guides
No.5	May. 1998	Development of the NSK K1 Seal for Linear Guides
No.8	May. 2000	NSK Linear Guides for High-Temperature Environments
No.9	Oct. 2000	Recent Developments in Highly Precise NSK Linear Guides
No.9	Oct. 2000	High-Performance Seals for NSK Linear Guides
No.11	Oct. 2001	High Load Capacity Mini LH Series of NSK Linear Guides
No.12	Apr. 2002	NSK Linear Guides & Ball Screws Equipped with NSK K1_ Lubrication Unit
No.12	Apr. 2002	NSK S1 Series, NSK Linear Guides and Ball Screws
No.13	Oct. 2002	Translide, -New Rolling Element Linear Motion Bearing-
No.14	May. 2003	New Generation of NSK Linear Guides miniature PU Series
No.15	Dec. 2003	Ultra-Precision NSK Linear Guides for Machine Tools-the HA Series
No.16	Aug. 2004	Numerical analysis Technology & NSK Linear Guides for Machine Tools
No.16	Aug. 2004	NSK RA Series Roller Guide
No.18	Aug. 2005	New Generation of NSK linear Guides Miniature PU Series/PE Series

www.bergab.ru Берг АБ bergab@ya.ru Тел. (495)-228-06-21, факс (495) 223-3071

www.bergab.ru Берг АБ bergab@ya.ru Тел. (495)-228-06-21, факс (495) 223-3071

A-Ⅲ Other Linear Rolling Guide Products

A-Ⅲ-1 Linear Rolling Bushing

A-Ⅲ-1.1 Features

(1) Low friction

Low friction owes to its design: Balls come into point contacts with raceway surface: the balls smoothly re-circulate. There is very little stick slip.

(2) Low noise

Noise level is low due to the ball retainer which is made of a synthetic resin.

(3) High precision

Due to NSK's superb quality control, precision is guaranteed.

(4) Dust prevention

Series with seal is available. The seal has small friction, and is highly durable. Highly dust-preventive double-lip system has been adopted.

(5) Superb durability

The material of outer sleeve is vacuum degassed, highly pure, and is heat-treated with good expertise.

A-Ⅲ-1.2 Models

There are three models

(1) Standard type LB (Fig. Ⅲ-1•1)

This model is the most commonly used, and is the only model that comes with a seal and in super precision grade.

Fig. Ⅲ-1•1 Standard type LB

(2) Adjustable clearance type LB-T (Fig. Ⅲ-1•2)

A part of the outer sleeve is cut open toward the axial direction. Used with a housing which can adjust inside diameter, it makes minute adjustment of the clearance between the linear shaft and the inscribed circle (an imaginary circle that connects the summit of the ball) of linear rolling bushing.

Fig. Ⅲ-1•2 Adjustable Clearance type LB-T

(3) Open type LB-K (Fig. Ⅲ-1•3)

A cut is made in the outer sleeve and retainer, to a width equivalent to one row of the retainer, to the axial direction. The opening is used to hold this linear rolling bushing by a support or base to prevent a long linear shaft from bending.

Fig. Ⅲ-1•3 Open type LB-K

www.bergab.ru Берг АБ bergab@ya.ru Тел. (495)-228-06-21, факс (495) 223-3071

A-Ⅲ-1.3 Accuracy

(1) Accuracy grades

- Standard type LB ····· High precision grade S, and super precision grade SP are available.
- Space adjustment type LB-T ····· } High precision grade S is available.
- Open type LB-K ····· }

(2) Tolerance of rolling linear bushing, linear shaft and housing

Table Ⅲ-1•1 Tolerance for inscribed circle of the linear rolling bushing and shaft diameter

Unit: μm

Nominal dimension/ inscribed circle diameter / shaft diameter (mm)		Tolerance / inscribed circle diameter[1]				Tolerance / width *B*		Tolerance/slot distance of retaining rings *Bn*		Recommended tolerance / shaft diameter			
		High precision grade S		Super high precision grade SP		High precision grade S Super high precision grade SP		High precision grade S Super high precision grade SP		High precision grade S		Super high precision grade SP	
over	or less	upper	lower	upper	lower	upper	lower	upper	lower	upper	lower	upper	lower
2.5	6	0	-8	0	-5	0	-120	+240	-240	-6	-14	-4	-9
6	10									-6	-15	-4	-10
10	18									-6	-17	-4	-12
18	30	0	-10	0	-6					-6	-19	-4	-13
30	50	0	-12	0	-8					-7	-23	-5	-16

Table Ⅲ-1•2 Tolerance of linear rolling bush outside diameter, and housing inside diameter

Unit: μm

Nominal dimension / outside diameter / housing inside diameter (mm)		Tolerance / outside diameter D[1]				ccentricity[2]	Tolerance / housing inside diameter			
		High precision grade S		Super high precision grade SP		Super high precision grade SP	High precision grade S		Super high precision grade SP	
over	or less	upper	lower	upper	lower	Maximum	upper	lower	upper	lower
2.5	6	0	-10	0	-7	8	+12	0	+8	0
6	10						+15	0	+9	0
10	18						+18	0	+11	0
18	30	0	-12	0	-8	9	+21	0	+13	0
30	50	0	-14	0	-9	10	+25	0	+16	0

Notes: (1) For adjustable clearance type and open type, figures indicate tolerances before the cut is made.
(2) Eccentricity means the run-out of offset between the centers of outer sleeve diameter and inscribed circle diameter.

A-Ⅲ-1.4 Composition of Reference Number

Example L B 3 5 N K Y S

- Linear rolling bushing
- Nominal inscribed circle diameter (linear shaft nominal diameter)
- N ····· With retaining ring groove
  No code ····· Without retaining ring groove
- No code ····· Standard type LB
  T ····· Adjustable clearance type LB-T
  K ····· Open type LB-K
- Plastic retainer
- Accuracy grade
  S ····· High precision grade
  SP ····· Super precision grade
- No code ····· No seal
  D ····· Single-side seal
  DD ····· Double-side seal

www.bergab.ru Берг АБ bergab@ya.ru Тел. (495)-228-06-21, факс (495) 223-3071

A-Ⅲ-1.5 Lubrication and Friction

(1) Grease lubrication

① **Supply in initial stage**

At time of delivery, the linear rolling bushing has a coat of rust preventive agent. Wipe it off with clean kerosene or organic solvent. Dry with an air blower, etc., then apply grease.

Lithium soap based greases with consistency level of 2 are generally used (e.g. NSK Grease LR 3, PS 2, and AS2).

② **Replenishment**

- Sealed linear rolling bushing is designed to be a disposal item. Therefore, a replenishing grease is considered to be not required. However, if replenishment becomes necessary due to dirty environment or wear of the seal, remove the linear bushing from the shaft and replenish lubricant in the same manner as the initial lubricating.
- For items without seal, wipe off old grease from the linear shaft, and apply new grease.
- Intervals of replenishments is every 100 km in an dirty environment, 500 km in a slightly dirty environment, 1,000 km or no replenishing for a normal environment.

(2) Oil lubricantion

It is not necessary to wash off the rust preventive agent applied before delivery.

Use an oil of ISO viscosity grade VG15-100. Drip the oil on the linear shaft by an oil supply system.

Temperature to use

–30 °C to 50 °C Viscosity VG15 - 46

50 °C to 80 °C Viscosity VG46 - 100

Lubricant is removed by the seal if the linear ball bearing has a seal. Therefore, the drip method cannot be used except for single-seal types.

(3) Friction coefficient

The linear rolling bushing has a small dynamic friction coefficient. This contributes to low power loss and temperature rise.

Fig. Ⅲ-4•1 indicates dynamic friction coefficient is merely 0.001-0.004. Also, at the speed of under 60 m/min, there is no danger for the temperature rise.

Friction force can be obtained by the following formula.

$$F = \mu \cdot P \quad \cdots\cdots (1)$$

In this formula:

F : Friction force (N)

P : Load (vertical load to the shaft center line) (N)

μ : Friction coefficient (dynamic or static)

For a seal type, a seal resistance of 0.3 ~ 2.40N is added to the above.

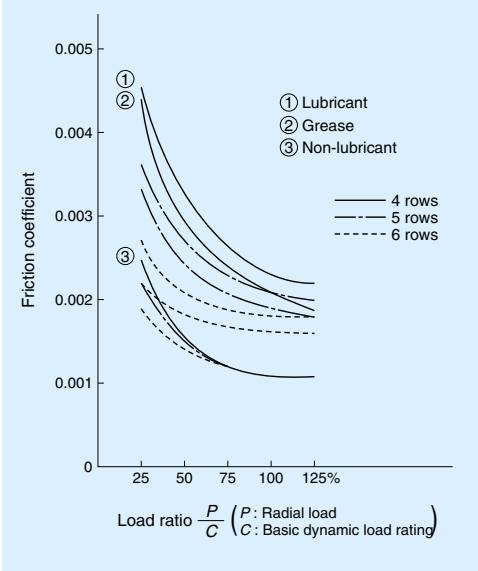

Fig. Ⅲ-1•4 Dynamic friction coefficient of linear rolling bushing

A-Ⅲ-1•6 Range of Conditions to Use

Generally, use under the following conditions.

Please consult NSK when values below exceed these ranges.

Temperature ····· Minus 30 °C to plus 80 °C

Speed ····· Up to 120 m/min

(excluding oscillation and short strokes)

A-Ⅲ-1•7 Preload and Rigidity

The linear rolling bushing is normally used without applying preload. If high positioning accuracy is required, set the clearance between the linear rolling bush and the shaft at the range of 0 ~ 5 μ m. Slight preload is a general rule (1% of basic dynamic load rating C -- see the dimension table).

The dimension table shows theoretical rigidity K when clearance with the shaft is zero, and a load of 0.1C is applied to the summit of the ball.

Rigidity K_N, when load is not 0.1C, is obtained by the following formula.

$$K_N = K\,(P/0.1C)^{1/3} \quad \cdots\cdots (2)$$

In this formula:

K : Rigidity value in the dimension table (N/μ m)

P : Radial load (N)

When the load is applied between the ball raws, the load becomes 1.122 times for 4 ball rows; 0.959 times for 5 ball rows; 0.98 times for 6 ball rows.

A-Ⅲ-1.8 Basic Load Rating and Rated Life

(1) Basic dynamic load rating

Basic dynamic load rating C is: A radial load which allows 90% of a group of linear rolling bush to run a distance of 50 km without suffering damage when they are moved individually.

There is a relationship as below between C and the life

$$L = 50\, f_L^3 \quad \cdots\cdots (3)$$

$$f_L = C/P \quad \cdots\cdots (4)$$

In this formula:

L : Rated life (km)

P : Radial load (N)

f_L : Life factor (Refer to Fig. Ⅲ-1•5)

This formula is used provided that the shaft hardness is HRC58 or higher. Rated life is shorter if the shaft is softer. In this case, find the hardness factor f_H from Fig. Ⅲ-1•6, and multiply the value.

$$f_L = C \cdot f_H/P \quad \cdots\cdots (5)$$

Or

$$C = P \cdot f_L/f_H \quad \cdots\cdots (6)$$

Life in time can be obtained by the following formula, substituting for given stroke length, cycle numbers, and running distance:

$$L_h = (L/1.2 \cdot S \cdot n) \times 10^4 \quad \cdots\cdots (7)$$

In this formula:

L_h : Life hours (h)

L : Rated life (km)

S : Stroke (mm)

n : Cycles per minute (cpm)

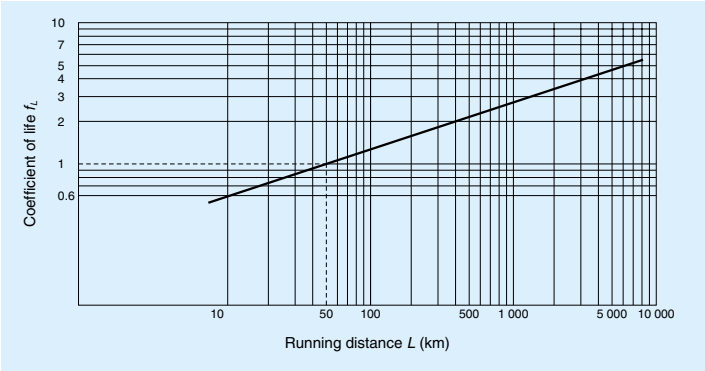

Fig. Ⅲ-1•5 Relationship between life factor and running distance

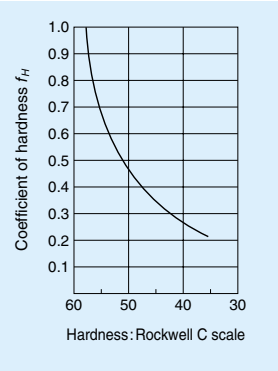

Fig. Ⅲ-1•6 Hardness factor

www.bergab.ru Берг АБ bergab@ya.ru Тел. (495)-228-06-21, факс (495) 223-3071

www.bergab.ru Берг АБ bergab@ya.ru Тел. (495)-228-06-21, факс (495) 223-3071

(2) Basic static load rating

It is a load that the total permanent deformation of outer sleeve, ball and shaft, at the contact point, becomes 0.01% of the ball diameter when this load is applied to the rolling bushing. It is understood in general that this is the applicable load limit which causes this much permanent deformation, nevertheless not hampering operation.

(3) Calculation example

What is the appropriate rolling bushing size if required life is 5,000 hours?

Conditions are:

- Three linear rolling bushings are installed in two parallel shafts, and support a reciprocating table.
- Load 450N is equally distributed to the three bushings.
- The table is required to reciprocate on the shafts at 200 times per minute, at a stroke of 70 mm.
- Hardness of the shaft: HRC 55

450/3=150 (N)

- Load per linear rolling bushing is:

From Formula (7), the required life, when indicated in distance, is:

$L=5\times10^3\times1.2\times70\times200/10^4=8.4\times10^3$ (km)

From Fig. 5 and Fig. 6,

Life factor $f_L=5.6$

Hardness factor $f_H=0.65$

Therefore, from Formula (6),

$C=P\times f_L/f_H$

$=150\times5.6/0.65=1292$ (N)

Based on the above, select linear rolling bushing LB30NY with shaft diameter of 30 mm, basic dynamic load rating of 1400 N.

(4) Compensating load rating by ball raw (circuit) position

Load rating of the linear rolling bushing changes by the position of the ball circuit rows.

Permissible load is larger when it is applied to the middle of the ball circuit rows than when it is applied directly above the ball row (Fig. Ⅲ-1•7).

(Radial clearance set at zero in this case.)

Load ratings in the dimension table are in case "A" when it is applied directly above the ball circuit row. If used as in case "B," the load rating becomes larger (Refer to Fig. Ⅲ-1•7).

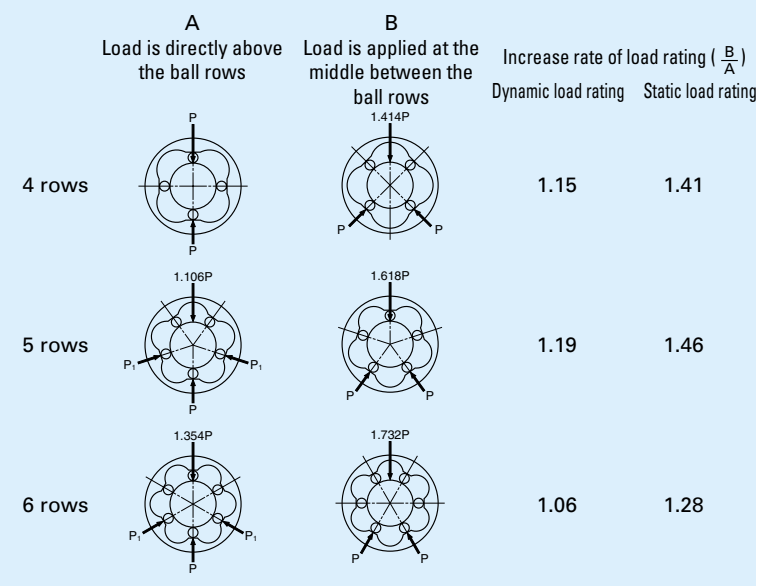

Fig. Ⅲ-1.7 Increasing rate of load rating by position of ball row (B/A)

A-Ⅲ-1.9 Shaft Specification

Harden the shaft surface, where the balls run, with heat treatment to provide the following values.

- Surface hardness ·····HRC58 or over
- Depth of core hardness at HRC50 or higher
  - Depth for LB3 ; 0.3 mm or deeper
  - Depth for LB50 ; 1.2 mm or deeper

Roughness of the surface should be:

- For SP grade, and "the clearance for fit" with the ball bushing less than 5 μm -
  - Less than 0.8S
- For SP grade with "the clearance" of more than 5 μm, and for S grade -
  - Less than 1.2S

Bending should be:

- LB3 -- 15 μm/100 mm
- LB50 -- 100 μm/1000 mm

An appropriate clearance for normal use conditions can be obtained when the tolerance in shaft diameter remains within the recommended range (refer to Table Ⅲ-1•1 in Page A224). For operations which require particular accuracy, select the shaft diameter which creates a clearance in the range of 0 ~ 0.005 (mm) for example, when assembled with the rolling bushing.

A-Ⅲ-1.10 Dust Proof

Select a linear rolling bushing with seals to prevent moisture or foreign matters, which are floating in the air, from entering.

A-Ⅲ-1.11 Installation

(1) Combination of shaft and linear rolling bushing

When the linear rolling bushing is installed in a linear motion table for its reciprocating movement, it is necessary to prevent the table from rotating.

In general, for this reason, two shafts, installed with two linear rolling bushings on each, are used.

Fig. Ⅲ-1•8 is an installation example.

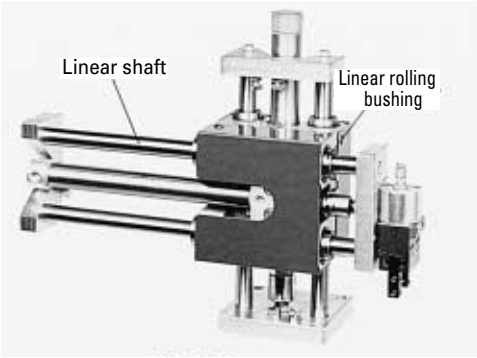

Fig. Ⅲ-1•8 Installation example

(2) Installation of linear rolling bushing

① **Standard type installation**

Fig. Ⅲ-1•9 shows a method using a retainer ring. Linear rolling bushing can also be secured to the housing using a stop plate and/or screw.

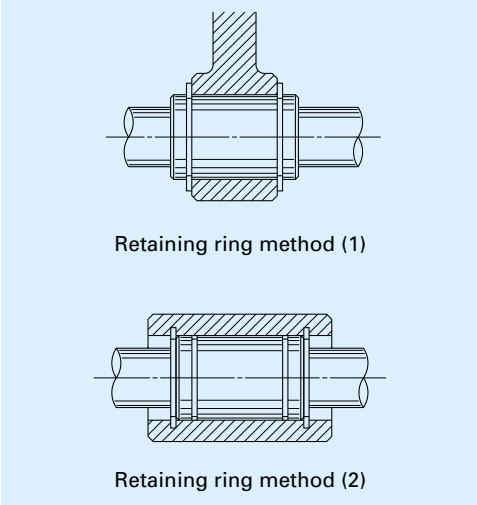

Fig. Ⅲ-1•9 Installation using retaining rings

ⓐ Housing inside diameter should be of a recommended value (Table Ⅲ-1•2, Page A224). The entire rolling bushing contracts and gives excessive preload if: the inside diameter is small ; the roundness or cylindricity is excessive. This may result in an unexpected failure.

ⓑ To install linear rolling bushing, use a tool (Fig. Ⅲ-1•10) and squeeze it in, or use a holder and lightly pound it.

www.bergab.ru Берг АБ bergab@ya.ru Тел. (495)-228-06-21, факс (495) 223-3071

www.bergab.ru Берг АБ bergab@ya.ru Тел. (495)-228-06-21, факс (495) 223-3071

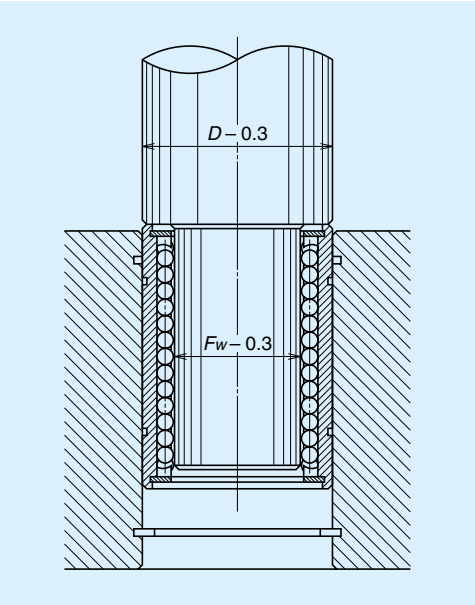

Fig. Ⅲ-1•10 Tool to install a linear rolling bushing

② **Installation of adjustable clearance type**

Use a housing which can adjust the inside diameter of the rolling bushing. This way, the clearance between the rolling bushing and the linear shaft can be easily adjusted. Arrange the cut-open section of the rolling bushing at a 90-degree angle to the housing's cut-open section. This is the most effective way to evenly distribute deformation toward circumferential direction.

The tolerance of shaft diameter of the adjustable clearance type should be within the recommended range (Refer to Table Ⅲ-1.1 in Page A224). As a general rule, set the preload at slight or light volume. (Do not provide excessive preload.) Use a dial gauge to measure and adjust clearance. However, here is an easy method to adjust .

First, loosen the housing until shaft turns freely. Then narrow the clearance gradually. Stop at the point when the shaft rotation becomes heavy. This creates a clearance zero or light preload.

③ **Installation of open type**

Use with clearance or with light preload.

Keep the tolerance in shaft diameter within the recommended range (Refer to Table Ⅲ-1.1 in Page A224), so the preload shall not become excessive.

(Unlike the adjustable clearance type, clearance cannot be narrowed by rotating the shaft because the state of shaft rotation does not indicate how narrow the space has become. Narrowing clearance requires caution for open type.)

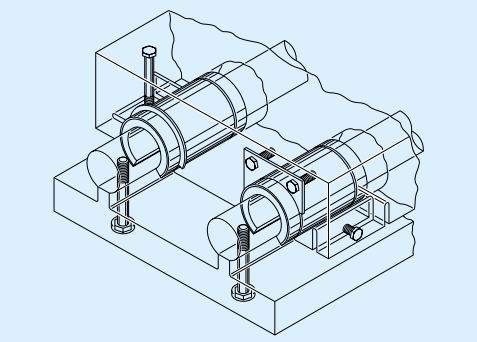

Fig. Ⅲ-1•11 Installation example of an open type

(3) Precaution for installing a shaft in the linear rolling bushing

ⓐ To install two shafts parallel to each other, first install one shaft accurately. Use this as a reference, and install the other parallel to the first shaft. This makes installation easy.

ⓑ Do not incline the shaft when inserting it into the linear rolling bushing. Do not force it to enter by twisting. This deforms the retainer, and causes the balls to fall out.

ⓒ Do not use the shaft for rotating movement after the shaft is in the linear rolling bushing. The balls slip and damage the shaft.

ⓓ Do not twist the shaft after it is in the linear rolling bushing. The pressure scars the shaft.

A-Ⅲ-1.12
Model LB (standard type), no seal

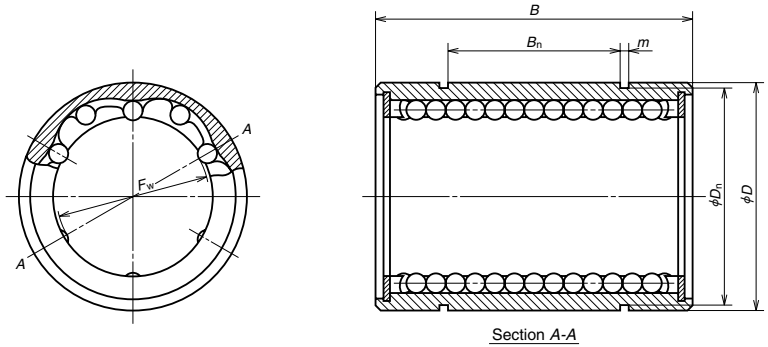

Unit: mm

Model No.	Inscribed circle diameter F_w	Outside diameter D	Length B	Retaining ring groove Distance B_n	Retaining ring groove With m	Retaining ring groove Bottom diameter D_n	Stiffness(1) (N/μm)	Number of ball circuit	Weight (kg) (Reference only)	Basic dynamic load rating C (N)	Basic static load rating C_0 (N)
LB3Y	3	7	10	—	—	—	3	4	0.0016	20	39
LB4Y	4	8	12	—	—	—	4.5	4	0.0022	29	59
LB6NY	6	12	19	11	1.15	11.5	7	4	0.0074	74	147
(2)**LB8ANY**	8	15	17	9	1.15	14.3	5.5	4	0.0094	78	118
LB8NY	8	15	24	15	1.15	14.3	9.5	4	0.014	118	226
LB10NY	10	19	29	19	1.35	18	12	4	0.025	206	355
LB12NY	12	21	30	20	1.35	20	13	4	0.028	265	500
LB13NY	13	23	32	20	1.35	22	13	4	0.040	294	510
LB16NY	16	28	37	23	1.65	26.6	14	4	0.063	440	635
LB20NY	20	32	42	27	1.65	30.3	19	5	0.088	610	1010
LB25NY	25	40	59	37	1.9	38	35	6	0.267	1000	1960
LB30NY	30	45	64	40	1.9	42.5	41	6	0.305	1400	2500
LB35NY	35	52	70	45	2.2	49	48	6	0.440	1510	2800
LB40NY	40	60	80	56	2.2	57	54	6	0.520	2230	4000
LB50NY	50	80	100	68	2.7	76.5	69	6	1.770	4100	7100

Note (1): Refer to Section Ⅲ-1•7.

(2): Semi-standard item of which length B is shorter than standard.

www.bergab.ru Берг АБ bergab@ya.ru Тел. (495)-228-06-21, факс (495) 223-3071

www.bergab.ru Берг АБ bergab@ya.ru Тел. (495)-228-06-21, факс (495) 223-3071

Model LB (standard type), with seal

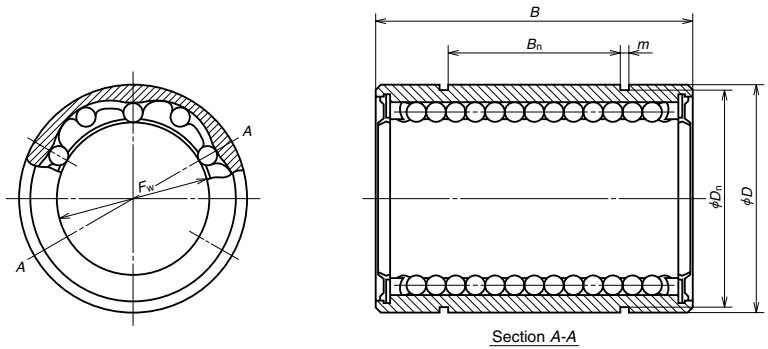

Unit: mm

(1)Model No.	Inscribed circle diameter F_w	Outside diameter D	Length B	Retaining ring groove Distance B_n	Retaining ring groove With m	Retaining ring groove Bottom diameter D_n	Number of ball circuit	Weight (kg) (Reference only)	Basic dynamic load rating C (N)	Basic static load rating C_0 (N)
LB6NYDD	6	12	19	11	1.15	11.5	4	0.0074	74	147
LB8ANYDD	8	15	17	9	1.15	14.3	4	0.0094	78	118
LB8NYDD	8	15	24	15	1.15	14.3	4	0.014	118	226
LB10NYDD	10	19	29	19	1.35	18	4	0.025	206	355
LB12NYDD	12	21	30	20	1.35	20	4	0.028	265	500
LB13NYDD	13	23	32	20	1.35	22	4	0.040	294	510
LB16NYDD	16	28	37	23	1.65	26.6	4	0.063	440	635
LB20NYDD	20	32	42	27	1.65	30.3	5	0.088	610	1010
LB25NYDD	25	40	59	37	1.9	38	6	0.267	1000	1960
LB30NYDD	30	45	64	40	1.9	42.5	6	0.305	1400	2500
LB35NYDD	35	52	70	45	2.2	49	6	0.440	1510	2800
LB40NYDD	40	60	80	56	2.2	57	6	0.520	2230	4000
LB50NYDD	50	80	100	68	2.7	76.5	6	1.770	4100	7100

Note (1) Single-seal type is indicated as LB-D.

Model LB-T (Adjustable clearance type)

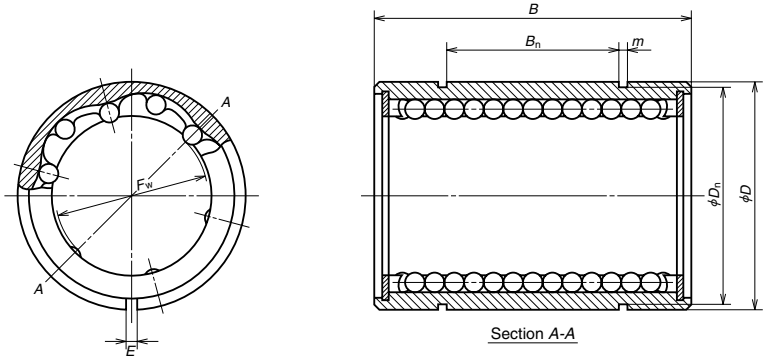

Unit: mm

Model No.	Inscribed circle diameter F_w	Outside diameter D	Length B	Opening width E	Retaining ring groove Distance B_n	Retaining ring groove With m	Retaining ring groove Bottom diameter D_n	Number of ball circuit	Weight (kg) (Reference only)	Basic dynamic load rating C (N)	Basic static load rating C_0 (N)
LB6NTY	6	12	19	0.8	11	1.15	11.5	4	0.0073	74	147
LB8ANTY	8	15	17	1	9	1.15	14.3	4	0.0093	78	118
LB8NTY	8	15	24	1	15	1.15	14.3	4	0.014	118	226
LB10NTY	10	19	29	1.5	19	1.35	18	4	0.025	206	355
LB12NTY	12	21	30	1.5	20	1.35	20	4	0.028	265	500
LB13NTY	13	23	32	1.5	20	1.35	22	4	0.040	294	510
LB16NTY	16	28	37	1.5	23	1.65	26.6	4	0.062	440	635
LB20NTY	20	32	42	2	27	1.65	30.3	5	0.087	610	1010
LB25NTY	25	40	59	2	37	1.9	38	6	0.265	1000	1960
LB30NTY	30	45	64	2	40	1.9	42.5	6	0.302	1400	2500
LB35NTY	35	52	70	3	45	2.2	49	6	0.44	1510	2800
LB40NTY	40	60	80	3	56	2.2	57	6	0.52	2230	4000
LB50NTY	50	80	100	3	68	2.7	76.5	6	1.75	4100	7100

www.bergab.ru Берг АБ bergab@ya.ru Тел. (495)-228-06-21, факс (495) 223-3071

www.bergab.ru Берг АБ bergab@ya.ru Тел. (495)-228-06-21, факс (495) 223-3071

Model LB-K (Open type)

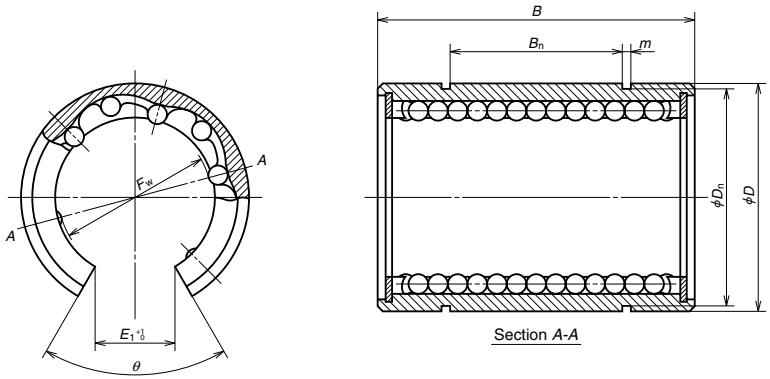

Unit: mm

Model No.	Inscribed circle diameter F_w	Outside diameter D	Length B	Opening width E_1	Opening angle θ	Retaining ring groove Distance B_n	Retaining ring groove Width m	Retaining ring groove Bottom diameter D_n	Number of ball circuit	Weight (kg) (Reference only)	Basic dynamic load rating C (N)	Basic static load rating C_0 (N)
LB20NKY	20	32	42	11	60°	27	1.65	30.3	4	0.072	610	1010
LB25NKY	25	40	59	13	50°	37	1.9	38	5	0.220	1000	1960
LB30NKY	30	45	64	15	50°	40	1.9	42.5	5	0.260	1400	2500
LB35NKY	35	52	70	17	50°	45	2.2	49	5	0.370	1510	2800
LB40NKY	40	60	80	20	50°	56	2.2	57	5	0.440	2230	4000
LB50NKY	50	80	100	25	50°	68	2.7	76.5	5	1.480	4100	7100

A-Ⅲ-2 Crossed Roller Guide

A-Ⅲ-2.1 Structure

Rollers with a retainer (hereinafter refer to as "retainer") are assembled in a pair of rails which have a V-shape groove. (the grooves form a 90-degree angle. Refer to Fig. Ⅲ-2•1, Ⅲ-2•2). Rollers are placed crisscrossed, and are able to support load in all directions, including moment loads.

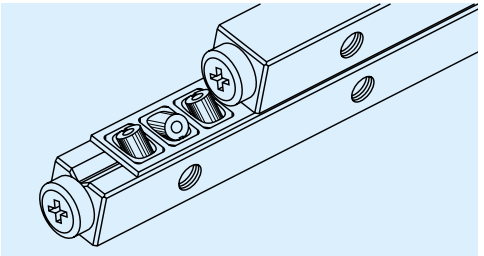

Fig. Ⅲ-2•1 Structure of crossed roller guide

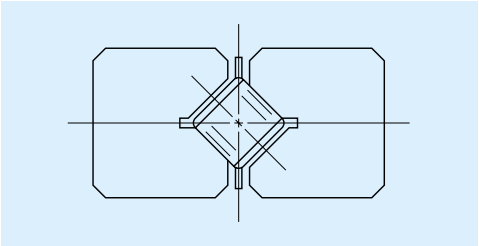

Fig. Ⅲ-2•2 Cross section of a crossed roller guide

A-Ⅲ-2.2 Features

(1) High rigidity

This is attributable to the long contact area between the rollers and their accurately ground rolling surface.

(2) Superbly smooth movement, low noise

The window which directly embraces the roller is made of plastic for smooth and quiet operation, lowering clatter when the retainer and the rollers come into contact.

(3) Less micro-slip

Occasionally, a minute continuous slippage of the retainer to one one direction, called "micro-slip," is caused due to installation error of the rail. After years of testing and research, NSK has developed technology to minimize this.

(4) Easy installation

Installation is easy because the rail bending is minimal, and the bolt hole pitch for installation is precise.

(5) Long durability

The material is vacuum-degassed and highly pure, and is hardened by carburized heat treatment for superb resistance to wear and fatigue.

A-Ⅲ-2.3 Accuracy

Accuracy grade P5 super precision and high precision grade P6 are available.

Fig. Ⅲ-2•3 shows parallelism of the roller's rolling surface to the mounting datum face.

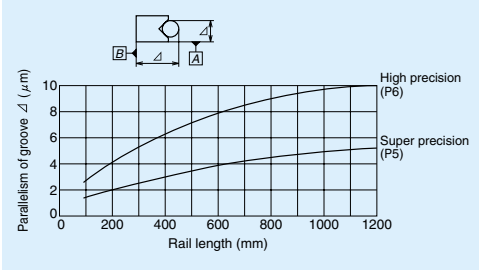

Fig. Ⅲ-2•3 Parallelism of the roller rolling surface

A-III-2.4 Rigidity

The number of the load rollers changes by the direction of the load. This is because the rollers are positioned crisscross.

That is, in case of Fig. Ⅲ-2•4:

The number of load rollers =1/2 x total roller number ·····(1)

In case of Fig. Ⅲ-2•5:

The number of load rollers = Total roller number ·····(2)

Fig. Ⅲ-2•6 shows changes in elastic deformation when there are 20 load rollers. If the total number of rollers is other than 20, use the graph in Fig. Ⅲ-2•7. Obtain the compensation factor which converts the elastic deformation value at time of 20 load rollers into the value when a specific number of rollers are loaded. That is, obtain a compensation factor on the ordinate that correspond to the number of load rollers on the abscissa. Then, multiply this factor by the elastic deformation value (on ordinates) which corresponds to the load (on abscissa) shown in Fig. Ⅲ-2•6.

www.bergab.ru Берг АБ bergab@ya.ru Тел. (495)-228-06-21, факс (495) 223-3071

www.bergab.ru Берг АБ bergab@ya.ru Тел. (495)-228-06-21, факс (495) 223-3071

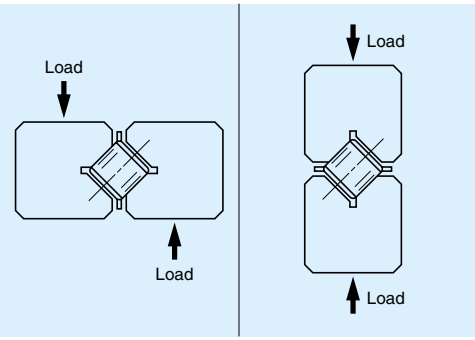

Fig. Ⅲ-2•4 Fig. Ⅲ-2•5

[Calculation example: Elastic deformation]

A retainer which contains 30 rollers (roller diameter 6 mm) is installed on both right and left side (Fig. III-2.8). How large is the elastic deformation of the crossed roller guide when a load of 4kN is applied to the table center?

[Answer]

A load of 2kN is applied to each side of the crossed roller guide. The elastic deformation value on the ordinate which corresponds to the load 2kN on the abscissa (in Fig. Ⅲ-2•6) is:

4.5μ m

This application of load is the same as in Fig. Ⅲ-2•4. Therefore, the number of load rollers is one-half of 30, or 15. From Fig. Ⅲ-2•7, the compensation factor on the ordinate which corresponds to 15 rollers on abscissa is:

1.3

Multiply 1.3 by 4.5 μ m obtained above. The answer is:

$4.5 \times 1.3 \fallingdotseq 6\ \mu$ m

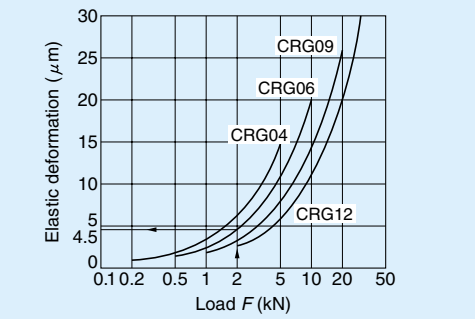

Fig. Ⅲ-2•6 Elastic deformation with 20 rollers

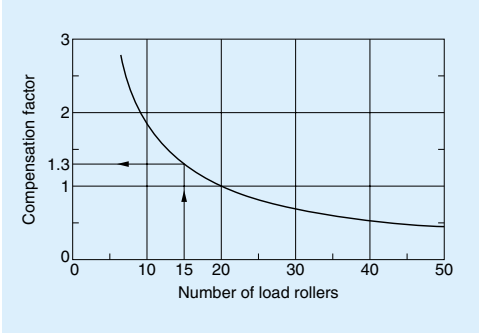

Fig. Ⅲ-2.7 Compensation factor to obtain elastic deformation

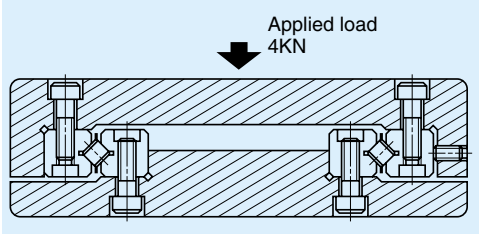

Fig. Ⅲ-2.8 Example calculation of elastic deformation (illustration)

A-Ⅲ-2.5 Friction Force

If installation and lubrication are appropriate, the starting friction coefficient is markedly small as shown below:

$\mu = 0.005$

A-Ⅲ-2.6 Lengths of Rail and Retainer

The relationship of rail length L with stroke S is as follows:

When $S \leqq 400$ mm, $L \geqq 1.5S$ ·····(3)

When $S > 400$mm, $L \geqq S$ ·····(4)

Since the retainer travels a distance of half of the stroke, the retainer length K is:

$K < L - \frac{S}{2}$ ·····(5)

The retainer does not detach from the rail when condition in Formula (5) is satisfied (Refer to Fig. Ⅲ-2.9).

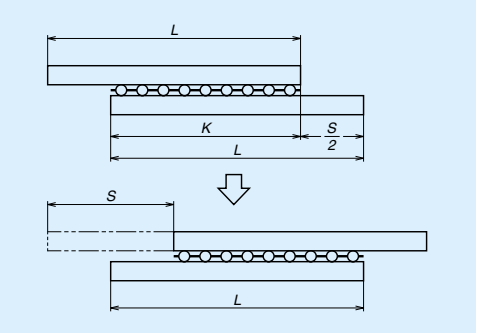

Fig. Ⅲ-2.9 Relationship of rail and retainer

A-Ⅲ-2.7 Lubrication and Dust Proof

For grease lubrication, lithium soap based greases of consistency 1 or 2 are used.

For example; NSK Grease LR 3,
NSK Grease PS 2,
NSK Grease AS 2

For oil lubrication, JIS viscosity 32 to 150 is recommended.

When necessary, install a bellows on the rail, or install a seal on the side of the rail to arrest foreign matters and dust as shown in Fig. Ⅲ-2•10.

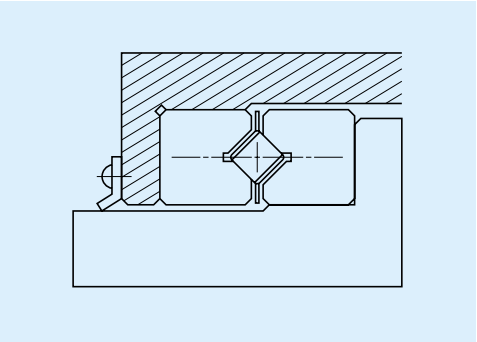

Fig. Ⅲ-2•10 Dust prevention (example)

A-Ⅲ-2.8 Installation

Fig. Ⅲ-2•11 shows the standard installation procedures.

ⓐ Secure Rail 1 and 2 to the bed using the fixing bolts. . Secure Rail 3 to the table with the bolts. Temporarily secure Rail 4 and loosen the side bolt.

ⓑ Match the bed and the table. Insert the retainer in the roller space. At this time, measure the distance from the rail end to the retainer end with a depth gauge to determine its position.
If the roller space is too narrow and the retainer does not go inside, slide Rail 4 toward the side bolt, then insert the retainer.

ⓒ Follow the reading of dial gauge which is previously set, and squeeze in all side bolts until they stop rattling. Do not apply excessive force.
When the side bolts are tightened, the rollers should be in the vicinity of the bolt position.
Then, secure Rail 4 with the fixing bolts.
Finally, install a stopper to the rail end.

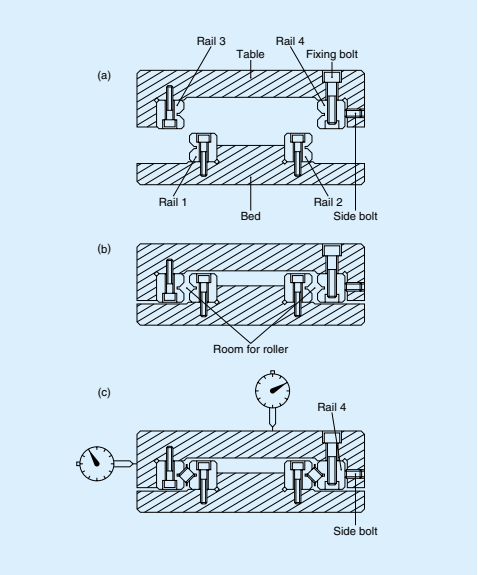

Fig. Ⅲ-2•11 Standard installation procedures

www.bergab.ru Берг АБ bergab@ya.ru Тел. (495)-228-06-21, факс (495) 223-3071

www.bergab.ru Берг АБ bergab@ya.ru Тел. (495)-228-06-21, факс (495) 223-3071

[Regarding preload]

As crossed roller guide has higher rigidity than other linear rolling guides, it does not need preload. It is also difficult to apply preload accurately. Crossed roller guide is usually used without clearance. For highly accurate applications, it is desirable to press the crossed roller guide by means of a bolt over the gib as shown in Fig. Ⅲ-2•12.

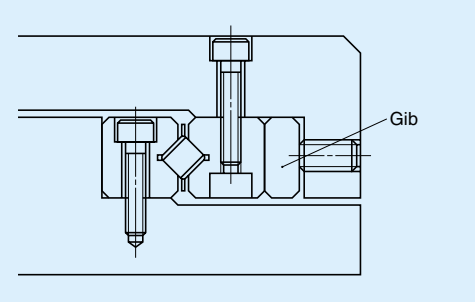

Fig. Ⅲ-2•12 Tightening using a gib

A-Ⅲ-2.9 Basic Static Load Rating

Basic static load rating becomes larger in proportion to the number of the load rollers "n." Obtain basic static load rating per roller C_{01}. Then the basic static load rating Con when the numbers of rollers is n can be obtained as follows.

$$C_{0n} = n \times C_{01} \quad \cdots\cdots (6)$$

Values of C_{01} are shown in the dimension table.

A-Ⅲ-2.10 Basic Dynamic Load Rating and Rated Life

Basic static load rating is based on a rated traveled distance of 50 km. The dimension table shows the value with 20 load rollers. When the number of load rollers is other than 20, a basic dynamic load rating C_n can be obtained by multiplying a compensation factor (obtained from Fig. Ⅲ-2•13.) by C in the dimension table.

(Suffix 'n' is to refer the number of load rollers.)

As an example; Number of load rollers: n = 15.

The compensation factor from Fig. Ⅲ-2•13 is 0.8.

$$C_{15} = 0.8 \times C$$

Therefore, C_{15} is obtained from the following formula.

Rated life (km) is shown in the formula below.

In this formula:

$$L = 5 \times 0 \left(\frac{C_n}{f_w \cdot F_c} \right)^{\frac{10}{3}} \quad \cdots\cdots (7)$$

f_w: Load factor. 1.0 ~ 1.2 under smooth operation

F_c: Computed load which applies to the guide (kN)

Please refer to NSK Linear Guide Technical Description for details.

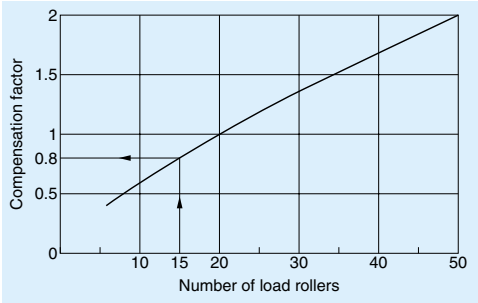

Fig. Ⅲ-2•13 Compensation factor for basic dynamic load rating

A-Ⅲ-2.11 Reference Number and Standard Set for "One-Axis"

Specifications are indicated as a reference number as shown below.

C R G 0 6 - 3 8 0 A P 5 N

- Model number
- Rail length (mm)
- Shape of the rail cross section
  Standard: A Semi-standard: T
- Accuracy grade: P5 ···Super precision grade; P6 ···High precision grade
- Holes for mounting: Tap hole: N; Drill hole: D

Note (1) : Semi-standard T, a shape of rail cross section, is available only for CRG04. It is lower in H dimension, and wider in W dimension compared with A.

Remarks : Standard set for "one axis" of the guide refers to 4 rails and 2 retainers which usually comprise the guide way for a one axis.

www.bergab.ru Берг АБ bergab@ya.ru Тел. (495)-228-06-21, факс (495) 223-3071

www.bergab.ru Берг АБ bergab@ya.ru Тел. (495)-228-06-21, факс (495) 223-3071

A-Ⅲ-2.12 Dimension Table

Crossed roller guide: Model CRG

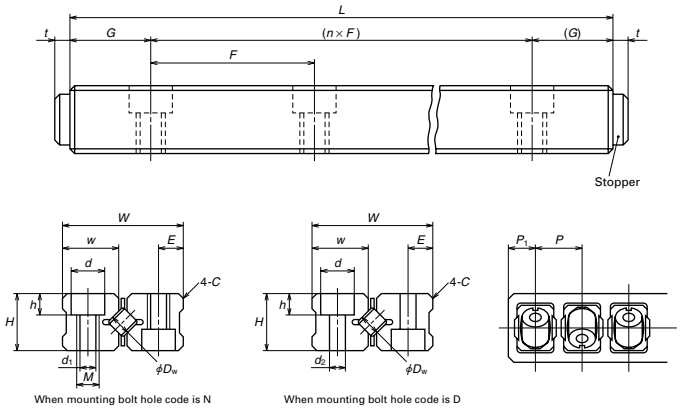

Unit: mm

Model No.	D_w	W	H	w	C	E	d	h	d_1	d_2	M	G	F	t	P	P_1	Dynamic load rating C when rollers are 20 (N)	Static load rating C_{01} when roller is one (N)	L Max length High precision P5	L Max length Saper high precision P6
CRG04…A	4	24	12	11.3	0.5	5	8	4.2	4.3	5	M 5x0.8	20	40	2.3	6.5	3.8	9800	665	200	300
CRG04…T	4	26	10	12.3	0.5	5	8	4.2	4.3	5	M 5x0.8	12/15	38/40	2.3	6.5	3.8	9800	665	200	300
CRG06…A	6	31	15	14.5	0.8	6	9.5	5.2	5.2	5.5	M 6×1	25	50	3.2	9.5	5.8	26700	1510	400	600
CRG09…A	9	44	22	20.7	1	9	11	6.2	6.8	7	M 8x1.25	50	100	4	14	8	72500	3400	600	900
CRG12…A	12	58	28	27.6	1.5	12	14	8.2	8.5	9	M10x1.5	50	100	5	20	12	130000	6050	900	1200

Remarks: The area which embraces the roller is plastic for the standard retainer. A solid type made of steel plate is available for high temperature resistance.

A-Ⅲ-3 Roller Pack

A-Ⅲ-3.1 Structure

A roller pack comprises a main body which supports load from the guide way block via two rows of rollers; an end cap which change the direction of the re-circulation of rollers at the end of the main body; a side plate which guides the rollers. (Fig. Ⅲ-3•1). Roller pack is one of linear rolling guide of which rollers are allowed to re-circulate infinitely for free from restriction of running range (stroke).

There is a plate spring attached to a side of roller pack to prevent roller pack from falling out when it is turned upside down after assembly.

Other component of the roller pack is spring pin. Spring pin is on the top surface of the roller pack, and makes installation of wedge block and fitting plate easier.

Wedge block is a unit to provide preload (Fig. Ⅲ-3•3) to roller pack; a fitting plate (Fig.Ⅲ-3•2), functioning like a pivot, adjusts misalignment of roller pack automatically. Wedge of wedge block moves up and down, to apply preload, by turning the adjust screw.

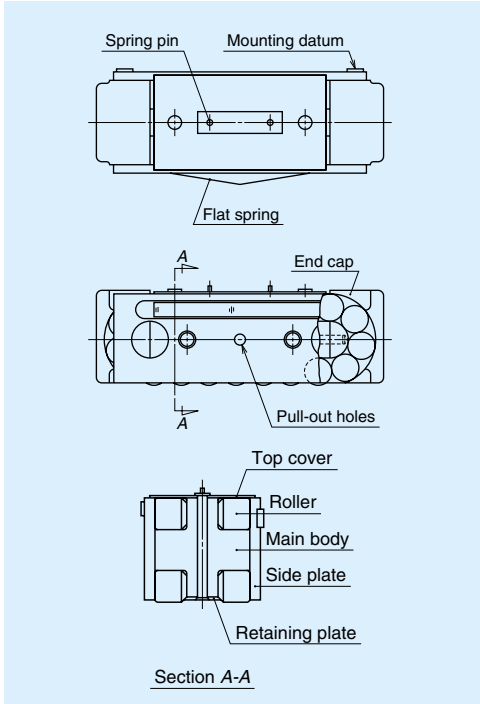

Fig. Ⅲ-3•1 Roller pack

Photo 1 Roller pack

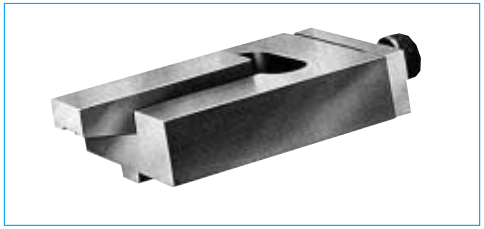

Photo 2 Wedge block

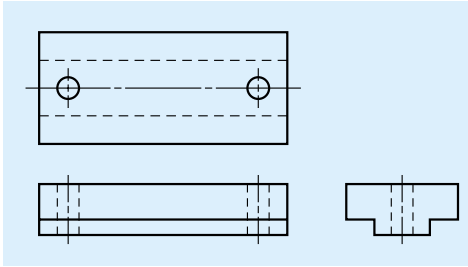

Fig. Ⅲ-3•2 Fitting plate

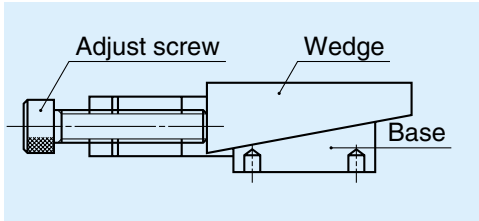

Fig. Ⅲ-3•3 Wedge block

www.bergab.ru Берг АБ bergab@ya.ru Тел. (495)-228-06-21, факс (495) 223-3071

www.bergab.ru Берг АБ bergab@ya.ru Тел. (495)-228-06-21, факс (495) 223-3071

A-Ⅲ-3.2 Features

Roller pack has two remarkable characteristics other linear roller guide bearings do not have.

① **No roller skewing**

If the roller is long relative to its diameter, the roller inclines during operation. This phenomenon is called skewing. Skewing causes problems such as sudden rise in friction force. However, a short roller lacks large load carrying capacity. The roller introduced here solved the skewing problem, yet has a large load carrying capacity:
short rollers are combined into double rows.

② **Load is applied equally.**

This is due to a "fitting plate," a result of "changed way of conceiving." Installation is quite easy: Merely place the fitting plate through the two holes to spring pins. The stop pins are inserted to holes on the top surface of the roller pack. The contact area between the fitting plate and the main body is made small. This way, the self-alignment is automatically accomplished by elastic contact of both parts.
This distributes an equal load to the rollers, far extending the life, compared to conventional roller linear guides.
Other characteristics include: Easy to provide preload by the wedge block; can be installed to vertical shaft; and reduction in noise level.

A-Ⅲ-3.3 Accuracy

The height tolerance of roller pack is 10 μ m. Roller packs are grouped into a size difference of every 2 μ m (corded by A ~ E) before delivery (Table Ⅲ-3•1).

Table Ⅲ-3•1 Height Classification

Unit: μ m

Category	Code
over or less	
+3 ~ +5	A
+1 ~ +3	B
-1 ~ +1	C
-3 ~ -1	D
-5 ~ -3	E

A-Ⅲ-3.4 Rigidity

Fig. Ⅲ-3•4 shows the relationship between load and deformation. This includes deformation caused by contact between: the rollers and main body; the rollers and guide way surface; the main body and fitting plate.

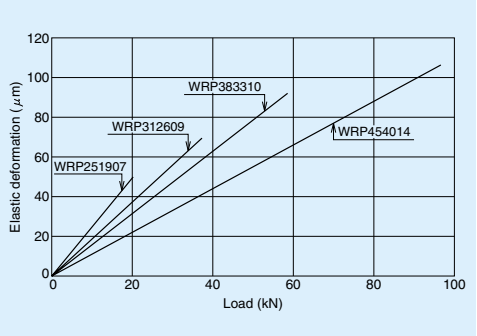

Fig. Ⅲ-3•4 Elastic deformation of the roller pack

A-Ⅲ-3•5 Preload

Fig. Ⅲ-3•5 shows conversions of tightening torque of the wedge block adjust screw into preload volume. Use a dial gauge for accurate measurement.

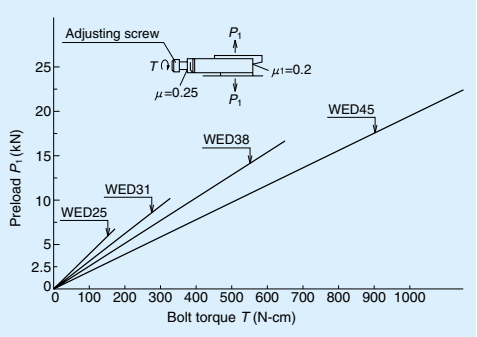

Fig. Ⅲ-3•5 Tightening torque of the adjust screw, and preload volume

A-Ⅲ-3.6 Friction and Lubrication

(1) Lubricants and volume

Mineral oils are commonly used. Since roller pack is used under a relatively heavy load, the oil should, ideally, have high viscosity and provide a strong film. Select from JIS viscosity 32-150.
Criteria of oil supply per roller pack Q (cc/h) can be calculated by the following formula.

$$Q \geqq S \times 1/4 \cdots\cdots (1)$$

In this formula, S (stroke) is shown in meters. The oil volume, when the stroke is 1m, per roller pack is more than 0.25 (cc/h). It is more desirable to supply a small amount of oil at short intervals than supplying a large amount at one time. In case of grease lubrication, use a grease of consistency 2. Albania EP2 is widely used.

(2) Friction coefficient

Starting friction coefficient is significantly small at under 0.005.

(3) Seal

It is necessary to install a wiper seal to the guide way surface to prevent foreign matters (swarf from cutting, and other dust) from entering to roller pack to enjoy the full benefit of the designed life of it. The material of the seal should have strong resistance to oil and wear. Felt and synthetic rubber (acrylonitril butadiene rubber) are some of the suitable materials. Fig. Ⅲ-3•6 shows a general method to install the seals.

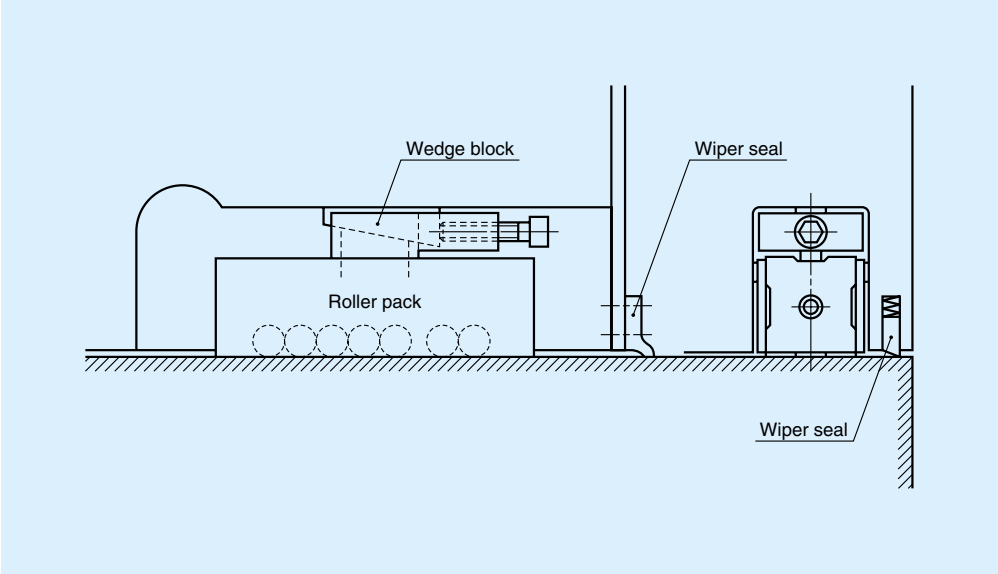

Fig. Ⅲ-3•6 Installation of seal

www.bergab.ru Берг АБ bergab@ya.ru Тел. (495)-228-06-21, факс (495) 223-3071

www.bergab.ru Берг АБ bergab@ya.ru Тел. (495)-228-06-21, факс (495) 223-3071

A-Ⅲ-3.7 Installation

(1) Installation and applying preload

As shown in Fig. Ⅲ-3•7, it is basic that a fitting plate is installed on the roller pack which receives load, and a wedge block is installed on the roller pack which receives no load, but only for preload. All components should be secured with a stop pin, facing toward the direction of movement. To cut costs for processing, it is recommended to divide the pocket (which contains roller pack) into some blocks and secure them with bolts (Fig. Ⅲ-3•7). Preload is provided by the wedge block. Estimate the actual load beforehand, so the preload shall not be lost when a load is applied. A load variation equivalent to up to two times of the preload volume can be absorbed in this case.
(Take into consideration the life in A-Ⅲ-3•8 in determining preload volume.)

(2) Accuracy of way block

The following is the ideal accuracy specification and installation accuracy of way block as a guide face.

Hardness by heat treatment
: More than HRC58 hardened depth 2 mm or more

Surface roughness
: Less than 1.6S
Parallelism as a single unit: Less than 0.010 mm per meter

Parallelism after installation
: Less than 0.020 mm per meter

Please consult NSK when using cast iron or cast steel guide face.

(3) Pocket accuracy

Accuracy of the pocket in which the roller pack is mounted should satisfy the following conditions.

Pocket width
: Roller pack width + 0.10 mm ~ 0.20 mm

Parallelism of the pocket side faces to the guide way face
: Less than 0.010 mm per 100 mm.

Parallelism of the fitting plate (pocket bottom) mounting face to the guide way face and parallelism of the wedge block mounting face to the guide way face :
: Less than 0.040 mm per 100 mm.

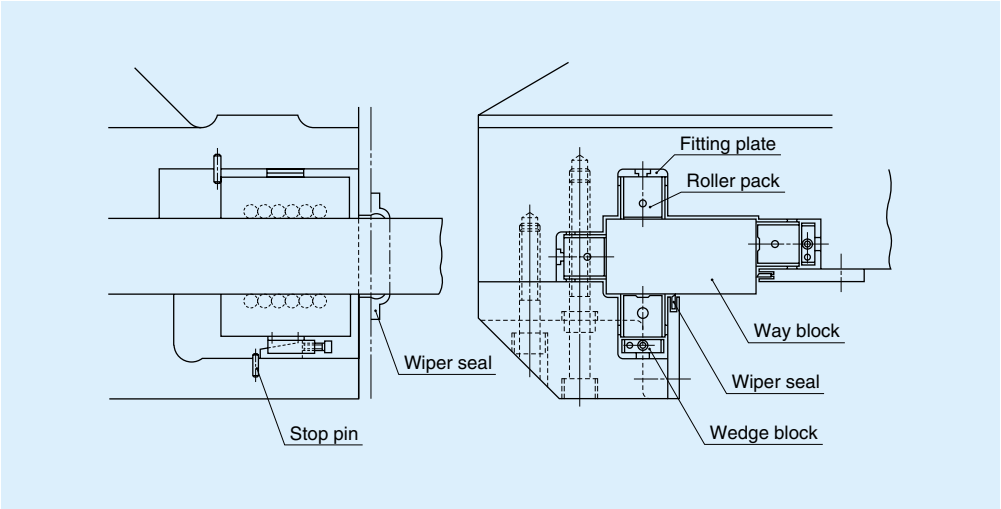

Fig. Ⅲ-3•7 Design of the roller pack pocket (example)

A-Ⅲ-3.8 Rated life

Rated life L (km) is shown in the following formula.
In this formula:

$$L=50\left(\frac{C}{f_w \cdot F_c}\right)^{\frac{10}{3}} \quad \cdots\cdots\cdots\cdots (2)$$

C : Basic dynamic load rating (kN)

f_w : Load factors. 1.0-~ 1.2 at time of smooth operation

F_c : Calculated load (kN) applied to the roller pack

A-Ⅲ-3.9 Disassembly

For the roller pack preloaded by the wedge block, remove it in the following manner.

- Loosen the adjust screw of the wedge block. Lightly tap the wedge. In case of light preload, the wedge loosens, and the roller pack can be pulled out.
- When pulling, put the bolt in the tap hole at the end of the end cap, and tug the bolt.
- In case of heavy load, the roller pack could not be pulled out by the above method. Hook a tool to the pull-out hole (Fig. Ⅲ-3.1) on the side plate of the roller pack, and pull out the roller pack.

www.bergab.ru Берг АБ bergab@ya.ru Тел. (495)-228-06-21, факс (495) 223-3071

www.bergab.ru Берг АБ bergab@ya.ru Тел. (495)-228-06-21, факс (495) 223-3071

A-Ⅲ-3.10 Dimension Table

Roller pack: Model WRP

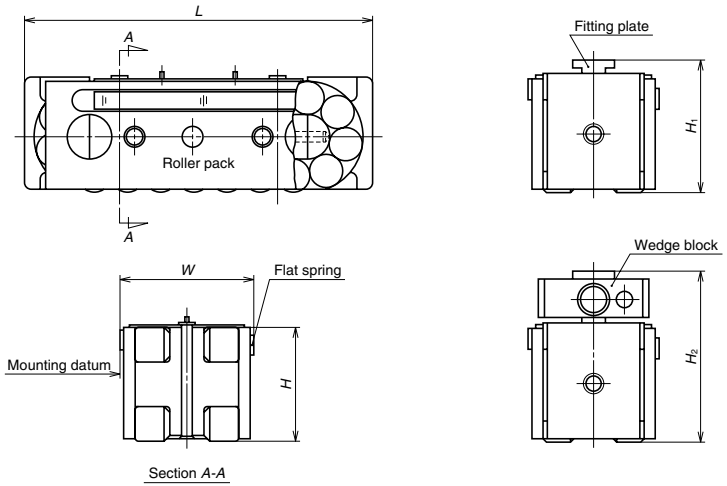

Unit: mm

Model No.	Width W	Height ±0.005 H	Length L	Applicable fitting plate reference No.	Assembled height H_1	Applicable wedge reference No.	Assembled height H_2	Basic dynamic load rating C (N)	Basic static load rating C_0 (N)
WRP 251907	25	19	65.5	WFT 25	24	WED 25	31 (30.4～31.6)	31000	40500
WRP 312609	31	26	85	WFT 31	31	WED 31	40 (39.4～40.6)	57000	73000
WRP 383310	38.1	33.31	104	WFT 38	38.91	WED 38	50.8 (50～51.5)	91000	113000
WRP 454014	45	40	138	WFT 45	45	WED 45	60 (59.2～60.8)	151000	191000

Remarks : Numbers in the parentheses in column H_2 show the adjustable height range of the wedge block.

Fitting plate: Model WFT

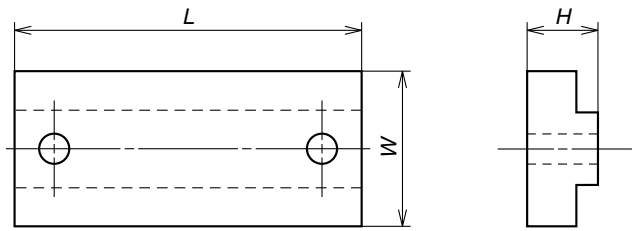

Unit: mm

Model No.	Width W	Height (±0.01) H	Length L	Applicable Roller pack
WFT 25	10	5	20	WRP 251907
WFT 31	12	5	26	WRP 312609
WFT 38	12.8	5.6	29	WRP 383310
WFT 45	16	5	40	WRP 454014

Wedge block: Model WED

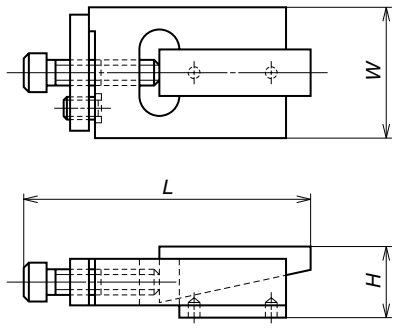

Unit: mm

Model No.	Width W	Height H	Length L	Applicable Roller pack
WED 25	23	12(11.5～12.5)	47	WRP 251907
WED 31	28	14(13.5～14.5)	63	WRP 312609
WED 38	35	17.47(16.9～18.1)	76	WRP 383310
WED 45	40	20(19.2～20.8)	95	WRP 454014

Remarks : Numbers in the parentheses in column H_2 show adjustable height range of the wedge block.

www.bergab.ru Берг АБ bergab@ya.ru Тел. (495)-228-06-21, факс (495) 223-3071

www.bergab.ru Берг АБ bergab@ya.ru Тел. (495)-228-06-21, факс (495) 223-3071

A-Ⅲ-4 Linear Roller Bearings

A-Ⅲ-4.1 Structure

Linear roller bearing comprises: A single row of rollers; the main body which supports load via rollers; the end cap which turns the roller re-circulating direction at the end of the main body from the loaded zone to the unloaded zone; a retaining wire which prevents rollers from falling out (Fig. Ⅲ-4•1). The main body, as the cylindrical roller bearing, has a rib at both sides. The rib guides the rollers to travel correctly, and assist the rollers to circulate infinitely in the bearing in a stable manner. This contributes to the bearing's linear movement without the restriction of travel range.

NSK also developed a highly functional preload pad (Photo 2) to provide a slight preload to the bearing. Basically, the preload pad comprises parallel plates and bellevile springs, which are installed between a parallel plates, and are adjusted its spring rate.

Preloaded pad can be used in a machine tool in the following manner.

When two bearings are installed with one on the top and the other under the way block (the bearings comprise a set), a preloaded pad is used at the bottom bearing. This provides an equal preload to the top and bottom bearings. This way, to a certain extent, the variation in the load and the uneven thickness of the way block can be absorbed.

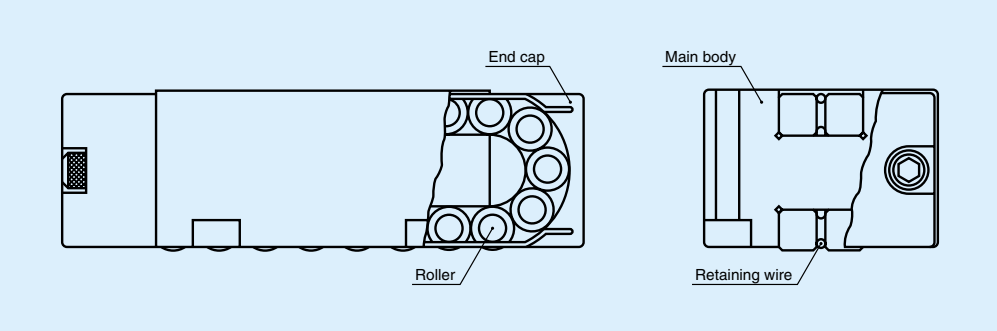

Fig. Ⅲ-4•1 Linear roller bearing

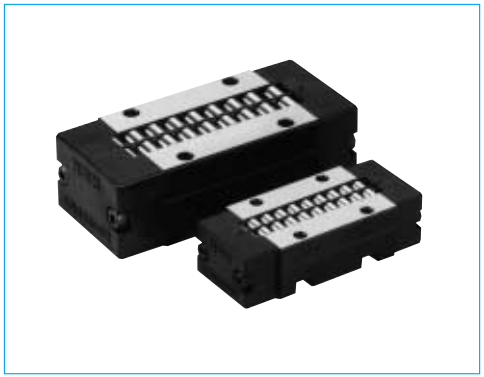

Photo 1 Linear roller bearing

Photo 2 Preload pad

A-Ⅲ-4.2 Features

In addition to the general features of a roller bearing guide such as no-stick slip, small friction resistance, and easy maintenance, the linear roller bearing has several more advantages.

(1) No trouble by roller skewing

Skewing is the inclination of the rollers during operation. It causes friction force to suddenly soar. Skewing is apt to occur when the roller is long relative to its diameter. The proportion of the length and diameter is 1:2 for the products in this series. This is superior to the commonly used 1:3 ratio.

(2) Highly reliable

Retaining the rollers without allowing them to fall out bearing is a crucial function of the linear guide bearing. The simple and highly effective retaining wire has solved such problem for this product series.

(3) Compact design

Despite the load carrying capacity, this series is smaller in size than any other models. This contributes to the application which requires compact design.

(4) High rigidity

The contact area between the bearing and the mounting surface is large to increase rigidity.

A-Ⅲ-4.3 Accuracy

The nominal height difference between bearings is 10 μm. The bearings are grouped into every 2 μm, and are coded before delivery (Table Ⅲ-4•1).

Table Ⅲ-4•1 Classification of height

Unit: μm

Category			Code
over		or less	
0	~	–2	A
–2	~	–4	B
–4	~	–6	C
–6	~	–8	D
–8	~	–10	E

A-Ⅲ-4.4 Rigidity

Fig. Ⅲ-4•2 shows elastic deformation.

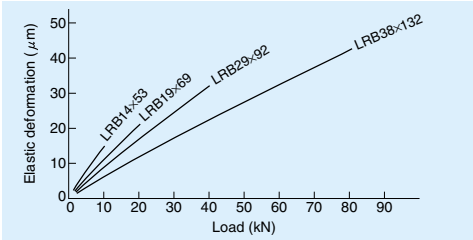

Fig. Ⅲ-4•2 Elastic deformation

A-Ⅲ-4.5 Friction and Lubrication

(1) Lubricants and volume

Mineral oils are used in general. The linear roller bearing is used under relatively heavy load. An oil which has high viscosity and creates a strong oil film is ideal for linear roller guides. Select from JIS viscosity 32-150.

General oil supply for a linear roller bearing Q (cc/h) can be calculated by the following formula.

$$Q \geqq S \times 1/4 \quad \cdots\cdots (1)$$

In this formula, S (stroke) is shown in meters. Therefore, when the stroke is 1m, the volume of lubricant per roller bearing is more than 0.25 (cc/h). It is recommended to supply a small amount of oil at short intervals rather than supplying a large amount at one time. In case of grease lubrication, a grease of consistency degree 2, such as Albania EP2, is generally used.

(2) Friction coefficient

Starting friction coefficient is significantly small at under 0.005.

(3) Seal

Install a wiper seal on the way block surface to prevent foreign matters (swarf from cutting, other dust) to realize a full life of the linear roller bearing. The material of the seal should have strong resistance against oil and wear. Felt and synthetic rubber (acrylonitril-butadien rubber) are some of the suitable materials.

www.bergab.ru Берг АБ bergab@ya.ru Тел. (495)-228-06-21, факс (495) 223-3071

www.bergab.ru Берг АБ bergab@ya.ru Тел. (495)-228-06-21, факс (495) 223-3071

A-Ⅲ-4.6 Installation

Secure the linear roller bearing using four bolts. The bearing main body has four holes for mounting.

Accuracy of way block
The ideal accuracy specification and mounting accuracy of a way block as a guide way surface are as follows.

Hardness by heat treatment
:More than HRC58 hardened depth 2 mm or more
Surface roughness
: Less than 1.6S
Parallelism as a single unit
:Less than 0.010 mm per 1 m
Parallelism after installation
:Less than 0.020 mm per 1 m

Please consult NSK when using cast iron or cast steel guide way.

A-Ⅲ-4.7 Rated life

Rated life L (km) is shown in the following formula.
In this formula:

$$L=50\left(\frac{C}{f_w \cdot F_c}\right)^{\frac{10}{3}} \quad \cdots\cdots\cdots\cdots (2)$$

C : Basic dynamic load rating (N)
f_w : Load factor. 1.0 ~ 1.2 at time of smooth operation
F_c : Calculated load applied on the bearing (N)

A-Ⅲ-4.8 Dimension Table

Linear roller bearing Model: LRB

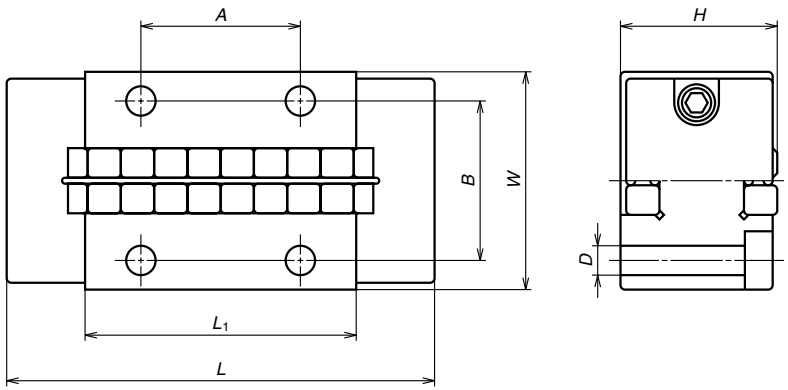

Unit: mm

Model No.	Width W	Height $H^{0}_{-0.010}$	Length L	L_1	Roller Diameter × length	Mounting bolt hole D	Bolt hole distance A	Bolt hole distance B	Basic dynamic load rating C (N)	Basic static load rating C_0 (N)
LRB 14×53	26.5	14.29	52.8	32.8	ϕ4×8	ϕ3.4	19	19.3	15400	21900
LRB 19×69	30.5	19.05	68.6	44.6	ϕ5×10	ϕ3.4	25.4	23.3	27000	39000
LRB 29×92	41.5	28.58	92.0	59	ϕ7.5×15	ϕ4.5	38.1	32.7	57500	76500
LRB 38×132	51.4	38.10	132.0	88	ϕ10×20	ϕ5.5	50.8	41.5	119000	159000

Remarks: Bearings are grouped into heights of every 2 μm before delivery.

www.bergab.ru Берг АБ bergab@ya.ru Тел. (495)-228-06-21, факс (495) 223-3071

www.bergab.ru Берг АБ bergab@ya.ru Тел. (495)-228-06-21, факс (495) 223-3071

Preload pad Model: PRP

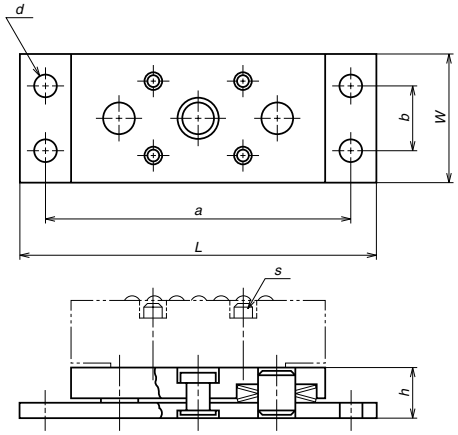

Unit: mm

Model No.	Applicable linear roller bearing	Height (no-load) *h* max	Compressed height *h* min	h min Load when fully compressed (N)	*W*	*L*	*d*	*a*	*b*	*s* Hex. Socket cap screw
PRP 14×53	LRB 14×53	10.23	9.53	1570	26	72	ϕ4.5	62	14	M3×16
PRP 19×69	LRB 19×69	11.53	11.10	2650	30	96	ϕ4.5	86	18	M3×19
PRP 29×92	LRB 29×92	13.13	12.70	6450	41	120	ϕ4.5	110	27	M3×25
PRP 38×132	LRB 38×132	16.28	15.88	12000	51	157	ϕ4.5	147	35	M5×38

A-Ⅲ-5 Cam Follower

A-Ⅲ-5.1 Structure and Characteristics

The outer ring of the bearing functions as a rolling ring (Fig. Ⅲ-5•1). This rolling ring is thick and tough. The rollers are crowned needle rollers, and have a large load carrying capacity. This provides high impact load resistance. The surface of the stud is core-hardened to provide durability against wear, and toughness.

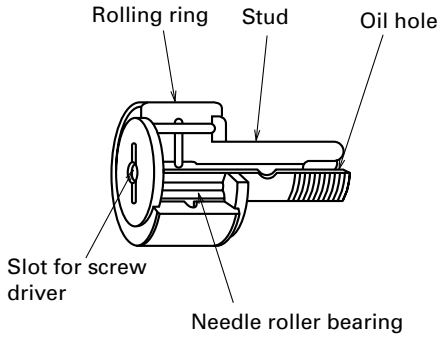

Fig. Ⅲ-5.1 Structure of Cam follower

A-Ⅲ-5.2 Types

(1) Bearing models

There are four models: With/ without a retainer and oil/grease lubricant (Table Ⅲ-5•1).

Table Ⅲ-5.1. Bearing models

Bearing model	Description
FCR	Full complement of rollers, no seal (oil is supplied later)
FCRS	Full complement of rollers, with seal (grease is sealed in)
FCJ	With retainer, no seal (oil is supplied later)
FCJS	With retainer, with seal (grease is sealed in)

www.bergab.ru Берг АБ bergab@ya.ru Тел. (495)-228-06-21, факс (495) 223-3071

www.bergab.ru Берг АБ bergab@ya.ru Тел. (495)-228-06-21, факс (495) 223-3071

(2) Appearances

Specifications of the exterior appearance include: Shape of the slot for the "screw driver" on the end of the stud; With/without an eccentric bush to be secured to the stud; Oil hole; Shape of outer surface of the rolling ring.

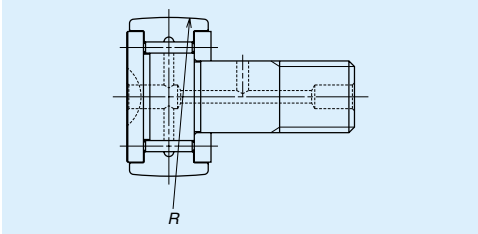

Fig. Ⅲ-5•2 Cam follower with sphere shaped outer surface

Table Ⅲ-5•2 Exterior appearances

Deference in appearance	Code for appearance	Description
Screw driver slot at the end of stud	(no code)	Hole for cross recessed screwdriver
	B	Hole for hexagonal socket screw keys
Eccentric bush to be secured to the stud	(no code)	No eccentric bush
	E	With eccentric bush
Oil hole	(no code)	Simple round hole
	P	Pipe tap for oil hole
Rolling ring outer surface	(no code)	Cylindrical shaped outer surface
	R	Sphere shape: Sphere radius 500 m (Fig. Ⅲ-5•2)

(3) Accessories

A blind plug comes with order. Nut, spring washer, and grease fitting are available on request. Table Ⅲ-5•3 shows accessory codes.

Table Ⅲ-5•3 Accessory codes

	Nut	Spring washer	Grease nipple
Code	I	N	Z

(4) Special products

Please consult NSK for the following items manufactured by NSK.

- Items in inch sizes
- Items with black film coating on exposed surface.
- Items in special shape.

A-Ⅲ-5.3 Reference Number for Ordering

Codes for (1) Bearing models, (2) Appearances, (3) Accessories constitute a reference number to be used in ordering. If accessory is not required, omit codes after the "+" sign.

Reference number composition

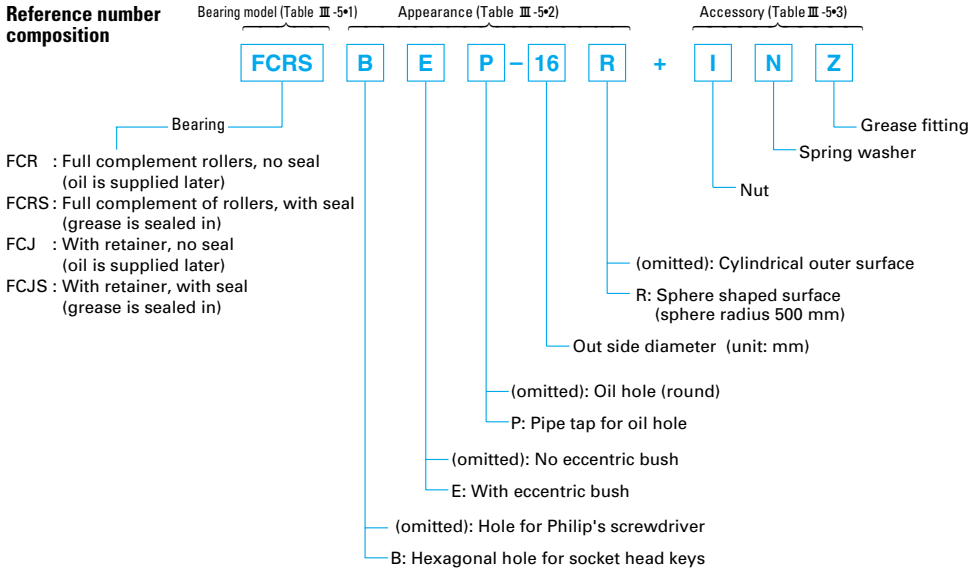

(Example) FCJSP-16RZ: With retainer and seal (grease is sealed in); Pipe tap for oil hole; Outer diameter 16 mm, its face forms an arc; With grease nipple
FCRS-16-N: Full complement of rollers; With a hole for screwdriver; With eccentric bush; Outer diameter 16 mm; With spring washer

A-Ⅲ-5.4 Accuracy

Table Ⅲ-5.4 shows the dimensional tolerances of cam follower.
Running accuracy grade is the same as JIS 0 Grade.

Table Ⅲ-5•4 Dimensional tolerance of cam follower

Unit: μ m

Model code	Tolerance of stud diameter Δdmp Fit tolerance grade	Variation of single plane mean outside diameter ΔDmp				Variation of outer ring width ΔCs	
		Cylindrical outer surface		Sphere-shaped outer surface			
		Upper	Lower	Upper	Lower	Upper	Lower
FCR, FCRS FCJ, FCJS	h7	Same as JIS 0 Grade		0	–50	Same as JIS 0 Grade	

www.bergab.ru Берг АБ bergab@ya.ru Тел. (495)-228-06-21, факс (495) 223-3071

www.bergab.ru Берг АБ bergab@ya.ru Тел. (495)-228-06-21, факс (495) 223-3071

A-Ⅲ-5.5 Permissible Load

(1) Permissible load of cam follower

Maximum radial load the cam follower can support is determined by the stud strength to bending or shearing force. Maximum values are shown in the dimension table.

(2) Permissible load of the rail track

Permissible load of the rail track where the bearing ring rolls are determined by the surface hardness, roughness, and state of lubrication of the rail surface. Table Ⅲ-5.5 shows load factors that correspond to the hardness of the track surface when the surface of the track is lubricated. Multiply the track's permissible load value shown in the dimension table by the coefficient that corresponds to the hardness. Hardness of HRC40 is the standard for these values.

Table Ⅲ-5.5 Permissible load factor of the track

Hardness (HRC)	Load factor
20	0.4
25	0.5
30	0.6
35	0.8
40 (Standard)	1.0
45	1.4
50	1.9
55	2.6
58	3.2

A-Ⅲ-5.6 Lubrication

A lithium soap based grease is sealed inside the cam follower which has seals. The range of temperature to use this grease is -10 to 110 °C. (Cam follower without seal uses oil lubrication, and does not have grease inside.)
Keep the lubricated track surface free of foreign mattersa.

A-Ⅲ-5.7 Permissible Rotational Speed

Cam followers with seal are suitable for high rotational operation. Table Ⅲ-5•6 shows their permissible rotational speed. Permissible rotational speed of full complement roller bearings are 1/3 of those with retainer. For grease lubrication, permissible rotational speed is 60% of the values shown in the Table.

Table Ⅲ-5•6 Permissible rotational speed of the bearing with retainer

Reference No.	Permissible rotational speed (min^{-1})
FCJB-10	34000
FCJ-12	26000
FCJ-16	16000
FCJ-19	12000
FCJ-22	10000
FCJ-26	10000
FCJ-30	7500
FCJ-32	7500
FCJ-35	6000
FCJ-40	5300
FCJ-47	4800
FCJ-52	4800
FCJ-62	3800
FCJ-72	3800
FCJ-80	3000
FCJ-85	3000
FCJ-90	3000

A-Ⅲ-5.8 Precautions for Installation

(1) Fits

The stud of cam follower is held on one side fixed. Fit between the stud and the bore where the stud enters must be in close tolerance.
Table Ⅲ-5•7 shows a recommended fit value.
The chamfer of the bore where the stud enters should be as small as possible, and the surface should be free of burrs.
When the fit is to be interference, press the stud into the hole, pushing the center of the end face.
To make the support face sufficiently large for the side plate, the surface diameter of the support end should be larger than *F* shown in the dimension table.

(2) Maximum tightening torque of the stud

Stud receives bending and tensile stress from the load to the bearing. Therefore, a screw tightening torque must not exceed values in the dimension table. (These values are when oil is applied to the screw section. Double the value when dry.)

Table Ⅲ-5.7 Recommended fitt for stud installation

Model code	Fit tolerance, class and grade of installation hole
FCR, FCJ, FCRS, FCJS	JS7(J7)

www.bergab.ru Берг АБ bergab@ya.ru Тел. (495)-228-06-21, факс (495) 223-3071

www.bergab.ru Берг АБ bergab@ya.ru Тел. (495)-228-06-21, факс (495) 223-3071

Cam follower

FCR : **Full complement of rollers**
FCRS : **Full complement of rollers, with seal and thrust washer**
FCJ : **With retainer**
FCJS : **With retainer, seal, and thrust washer**

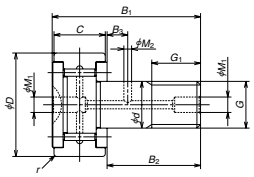

FCR

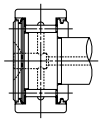

FCRS

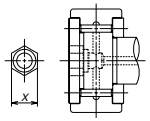

FCRB

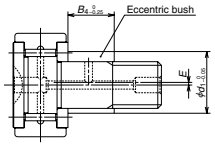

FCRE

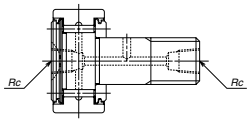

FCRSP

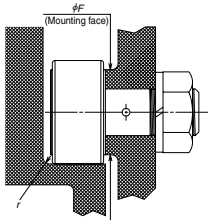

Unit: mm

Model No.		Main dimension			Detail dimension														
FCR FCJ	FCRS FCJS	D	C	d	Thread G	G_1	B_1	B_2	B_3	M_2	M_1	$Y_{(2)}$ (Min.)	Basic dynamic load rating C_r (N)	Permissible maximum load P_{max} (N)	Permissible track load (N)	Weight (kg) (Reference only)	Hexagon socket hole (width across flat) X	Eccentric bush B_4	Eccentric bush d_1	Eccentric bush E	Tap hole for lubrication pipe P_T	Diameter, supporting surface F (Min.)	Thread tightening torque(4) (N · cm) (Max.)
FCJB-10	—	**10**	7	3	M3×0.5	5	17	9	—	—	—	0.3	1390	590	1320	0.005	2.5	—	—	—	—	7.5	28
FCJ-12	—	**12**	8	4	M4×0.7	6	20	11	—	—	—	0.3	1970	1050	1860	0.008	—	—	—	—	—	9	64
FCJB-12	—		8	4	M4×0.7	6	20	11	—	—	—	0.3	1970	1050	1860	0.008	2.5	—	—	—	—	9	64
FCR-16	**FCRS-16**	**16**	11	6	M6×1.0	8	28	16	—	—	4(1)	0.3	5800	2360	3350	0.020	4	8	9	0.5	M6×0.75(3)	11	226
FCJ-16	**FCJS-16**		11	6	M6×1.0	8	28	16	—	—	4(1)	0.3	2830	2360	3350	0.018	4	8	9	0.5	M6×0.75(3)	11	226
FCR-19	**FCRS-19**	**19**	11	8	M8×1.25	10	32	20	—	—	4(1)	0.3	6600	4200	4150	0.031	4	10	11	0.5	M6×0.75(3)	13	550
FCJ-19	**FCJS-19**		11	8	M8×1.25	10	32	20	—	—	4(1)	0.3	3450	4200	4150	0.030	4	10	11	0.5	M6×0.75(3)	13	550
FCR-22	**FCRS-22**	**22**	12	10	M10×1.25	12	36	23	—	—	4(1)	0.3	8550	6550	5300	0.047	5	11	13	0.5	M6×0.75(3)	15	1060
FCJ-22	**FCJS-22**		12	10	M10×1.25	12	36	23	—	—	4(1)	0.3	4350	6550	5300	0.045	5	11	13	0.5	M6×0.75(3)	15	1060
FCR-26	**FCRS-26**	**26**	12	10	M10×1.25	12	36	23	—	—	4(1)	0.3	8550	6550	6000	0.060	5	11	13	0.5	M6×0.75(3)	15	1060
FCJ-26	**FCJS-26**		12	10	M10×1.25	12	36	23	—	—	4(1)	0.3	4350	6550	6000	0.058	5	11	13	0.5	M6×0.75(3)	15	1060
FCR-30	**FCRS-30**	**30**	14	12	M12×1.5	13	40	25	6	3	6	0.6	12500	9250	7800	0.088	6	12	17	1	M6×0.75(3)	20	1450
FCJ-30	**FCJS-30**		14	12	M12×1.5	13	40	25	6	3	6	0.6	7200	9250	7800	0.086	6	12	17	1	M6×0.75(3)	20	1450
FCR-32	**FCRS-32**	**32**	14	12	M12×1.5	13	40	25	6	3	6	0.6	12500	9250	8050	0.099	6	12	17	1	M6×0.75(3)	20	1450
FCJ-32	**FCJS-32**		14	12	M12×1.5	13	40	25	6	3	6	0.6	7200	9250	8050	0.096	6	12	17	1	M6×0.75(3)	20	1450
FCR-35	**FCRS-35**	**35**	18	16	M16×1.5	17	52	32.5	8	3	6	0.6	18600	17000	11800	0.17	10	15.5	22	1	Rc 1/8	24	4000
FCJ-35	**FCJS-35**		18	16	M16×1.5	17	52	32.5	8	3	6	0.6	9700	17000	11800	0.165	10	15.5	22	1	Rc 1/8	24	4000
FCR-40	**FCRS-40**	**40**	20	18	M18×1.5	19	58	36.5	8	3	6	1	20500	21700	14300	0.25	10	17.5	24	1	Rc 1/8	26	5950
FCJ-40	**FCJS-40**		20	18	M18×1.5	19	58	36.5	8	3	6	1	10300	21700	14300	0.24	10	17.5	24	1	Rc 1/8	26	5950
FCR-47	**FCRS-47**	**47**	24	20	M20×1.5	21	66	40.5	9	4	8	1	28200	26400	20800	0.39	12	19.5	27	1	Rc 1/8	31	8450
FCJ-47	**FCJS-47**		24	20	M20×1.5	21	66	40.5	9	4	8	1	19200	26400	20800	0.38	12	19.5	27	1	Rc 1/8	31	8450
FCR-52	**FCRS-52**	**52**	24	20	M20×1.5	21	66	40.5	9	4	8	1	28200	26400	22900	0.47	12	19.5	27	1	Rc 1/8	31	8450
FCJ-52	**FCJS-52**		24	20	M20×1.5	21	66	40.5	9	4	8	1	19200	26400	22900	0.455	12	19.5	27	1	Rc 1/8	31	8450
FCR-62	**FCRS-62**	**62**	29	24	M24×1.5	25	80	49.5	11	4	8	1	40000	38500	34000	0.80	14	24.5	34	1	Rc 1/8	45	15200
FCJ-62	**FCJS-62**		29	24	M24×1.5	25	80	49.5	11	4	8	1	24900	38500	34000	0.79	14	24.5	34	1	Rc 1/8	45	15200
FCR-72	**FCRS-72**	**72**	29	24	M24×1.5	25	80	49.5	11	4	8	1	40000	38500	38000	1.05	14	24.5	34	1	Rc 1/8	45	15200
FCJ-72	**FCJS-72**		29	24	M24×1.5	25	80	49.5	11	4	8	1	24900	38500	38000	1.05	14	24.5	34	1	Rc 1/8	45	15200
FCR-80	**FCRS-80**	**80**	35	30	M30×1.5	32	100	63	15	4	8	1	60500	61000	52000	1.55	17	31	40	1.5	Rc 1/8	52	30500
FCJ-80	**FCJS-80**		35	30	M30×1.5	32	100	63	15	4	8	1	39000	61000	52000	1.55	17	31	40	1.5	Rc 1/8	52	30500
FCR-85	**FCRS-85**	**85**	35	30	M30×1.5	32	100	63	15	4	8	1	60500	61000	55500	1.75	17	31	40	1.5	Rc 1/8	52	30500
FCJ-85	**FCJS-85**		35	30	M30×1.5	32	100	63	15	4	8	1	39000	61000	55500	1.75	17	31	40	1.5	Rc 1/8	52	30500
FCR-90	**FCRS-90**	**90**	35	30	M30×1.5	32	100	63	15	4	8	1	60500	61000	59000	1.95	17	31	40	1.5	Rc 1/8	52	30500
FCJ-90	**FCJS-90**		35	30	M30×1.5	32	100	63	15	4	8	1	39000	61000	59000	1.95	17	31	40	1.5	Rc 1/8	52	30500

Note (1) Oil hole is only on the front face of the head.
(2) Use a value larger than γ (minimum).
(3) Pipe tap screw for oil supply is only on the front face of the head.
(4) Values are when oil is applied to the screw section. Double (approx.) the value when dry.

Remarks : Grease is sealed in for the cam follower with seals. Cam follower without seal does not have grease.

www.bergab.ru Берг АБ bergab@ya.ru Тел. (495)-228-06-21, факс (495) 223-3071

www.bergab.ru Берг АБ bergab@ya.ru Тел. (495)-228-06-21, факс (495) 223-3071

A-Ⅲ-6 Roller Follower

A-Ⅲ-6.1 Structure and Characteristics

The outer ring of the bearing functions as a rolling ring (Fig. Ⅲ-6•1). This rolling ring is thick and tough. The rollers are crowned needle rollers, and have a large load carrying capacity. This provides high impact resistance.

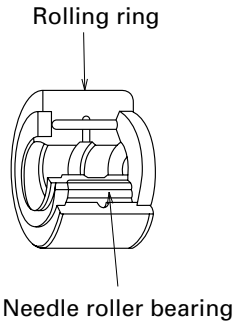

Fig. Ⅲ-6•1 Structure of Roller Follower

A-Ⅲ-6.2 Types

(1) Bearing models

There are four models: With/ without a retainer and oil/grease lubricant (Table Ⅲ-6•1).

Table Ⅲ-6•1 Bearing models

Bearing model	Description
FYCR	Full complement of rollers, no seal (oil is supplied later)
FYCRS	Full complement of rollers, with seal (grease is sealed in)
FYCJ	With retainer, no seal (oil is supplied later)
FYCJS	With retainer, with seal (grease is sealed in)

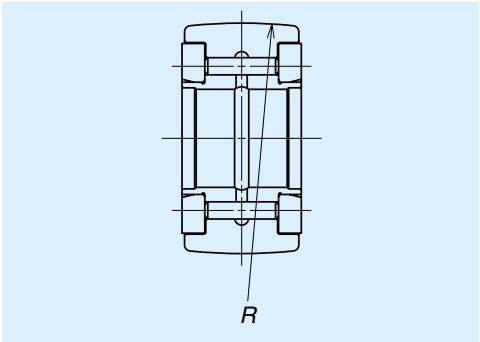

Fig. Ⅲ-6•2 Sphere shaped rolling ring

(2) Exterior appearances

There are two types as shown in Table Ⅲ-6•2.

Table Ⅲ-6•2 Types of exterior appearance

Code for appearance	Description
(no code)	Cylindrical shaped outer surface
R	Sphere shaped: Outer surface forms a part of sphere with arc of radius 500 mm. (Fig. Ⅲ-6•2)

(3) Special products

NSK manufactures the following items. Please consult NSK.

- Items in inch sizes
- Black film coating on exposed surface
- Special-shaped items.

A-Ⅲ-6.3 Reference Number for Ordering

Codes shown in (1) Bearing models, (2) Exterior Appearances constitute a reference number for ordering.

Reference number composition

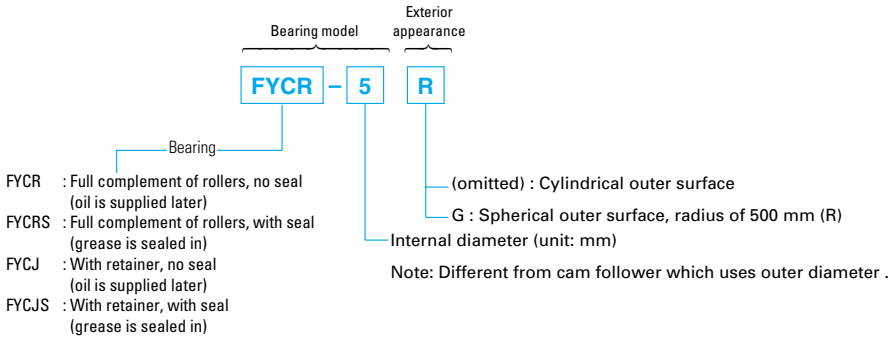

(Example) FYCR-5 : Full complement of rollers; with seal (grease is sealed in); internal diameter 5 mm
FYCJ-5R : With retainer, no seal (oil is supplied later), internal diameter 5 mm; Spherical outer surface rolling ring

A-Ⅲ-6.4 Accuracy

Dimension tolerance and running accuracy are the same as JIS 0 grade. However, the admissible difference in single plane mean outside diameter of spherical outer surface is 0.0 to -(minus) 0.05 mm.

A-Ⅲ-6.5 Permissible Load

(1) Permissible load of roller follower

As a bearing, allowable load is determined by basic load rating. Refer to load rating values in the dimension table.

(2) Permissible load of rail track

The concept is the same as for cam follower. Refer to Page A239 for permissible load values.

A-Ⅲ-6.6 Lubrication

A lithium soap based grease is sealed inside the Roller Follower which has seals. The range of temperature to use this grease is -10 to 110 °C. Supply oil to the Roller Follower which does not have a seal.
The track surface for lubrication should be nearly free of foreign matters.

www.bergab.ru Берг АБ bergab@ya.ru Тел. (495)-228-06-21, факс (495) 223-3071

www.bergab.ru Берг АБ bergab@ya.ru Тел. (495)-228-06-21, факс (495) 223-3071

A-Ⅲ-6.7 Permissible Rotational Speed

Roller Follower models with retainer are suitable for high rotational operations. Table Ⅲ-6•3 shows their permissible rotational speed. Permissible rotational speed of a roller follower with full complement of roller is 1/3 of those with retainer. In case of grease lubrication, permissible speed is 60% of the values shown in the Table.

Table Ⅲ-6•3 Permissible rotational speed of the bearing with retainer

Reference No.	Permissible rotational speed (min^{-1})
FYCJ-5	16000
FYCJ-6	12000
FYCJ-8	10000
FYCJ-10	8000
FYCJ-12	7100
FYCJ-15	6300
FYCJ-17	5600
FYCJ-20	5000
FYCJ-25	4000
FYCJ-30	3200
FYCJ-35	2800
FYCJ-40	2400
FYCJ-45	2000
FYCJ-50	1900

A-Ⅲ-6.8 Precautions for Installation

Roller Follower is generally operated by outer ring rotation. The shaft is used by "medium fit" or "clearance fit." For heavy load, the shaft is hardened by heat-treatment, and is used by "interference fit."
Table Ⅲ-6•4 shows recommended fit values.
Secure both sides of the inner ring to a flat surface which is at right angle to the center axis.
To make the support face sufficiently large for the side plate, the end face of the support should be larger than F shown in the dimension table.

Table Ⅲ-6•4 Recommended fit for shaft

Load	Tolerance grade of shaft (class)
Light load, medium load	g6 or h6
Heavy load	k6

www.bergab.ru Берг АБ bergab@ya.ru Тел. (495)-228-06-21, факс (495) 223-3071

www.bergab.ru Берг АБ bergab@ya.ru Тел. (495)-228-06-21, факс (495) 223-3071

Roller Follower

FYCR : Full complement of rollers
FYCRS : Full complement of rollers, with seal, thrust washer
FYCJ : With retainer
FYCJS : With retainer, seal, thrust washer

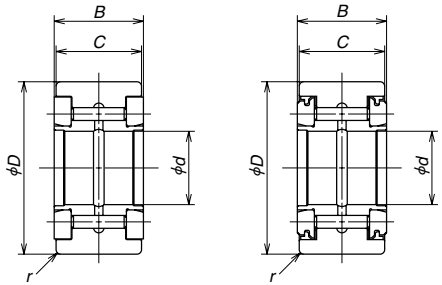

FYCR FYCRS

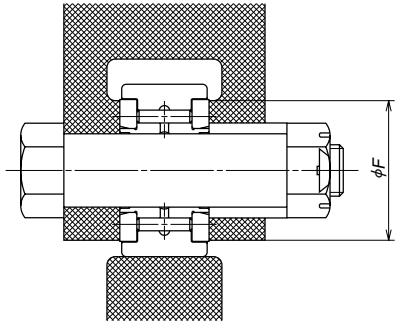

Unit: mm

Model No.		Main dimension					Basic load	rating (N)	Track permissible load	Weight	Diameter, supporting surface	Model No.	
FYCR FYCJ	FYCRS FYCJS	*d*	*D*	*C*	*B* $^{0}_{-0.38}$	*r* (Min.)	Dynamic C_r	Static C_{0r}	(N)	(kg) (Reference only)	*F* (Min.)	FYCR FYCJ	FYCRS FYCJS
FYCR-5	**FYCRS-5**	5	16	11	12	0.3	5800	8000	3350	0.016	10	**FYCR-5**	**FYCRS-5**
FYCJ-5	**FYCJS-5**		16	11	12	0.3	2830	2620	3350	0.014	10	**FYCJ-5**	**FYCJS-5**
FYCR-6	**FYCRS-6**	6	19	11	12	0.3	6550	9900	4150	0.022	12	**FYCR-6**	**FYCRS-6**
FYCJ-6	**FYCJS-6**		19	11	12	0.3	3450	3600	4150	0.020	12	**FYCJ-6**	**FYCJS-6**
FYCR-8	**FYCRS-8**	8	24	14	15	0.3	10100	15000	6500	0.044	14	**FYCR-8**	**FYCRS-8**
FYCJ-8	**FYCJS-8**		24	14	15	0.3	5700	6000	6500	0.042	14	**FYCJ-8**	**FYCJS-8**
FYCR-10	**FYCRS-10**	10	30	14	15	0.6	11700	18500	7800	0.069	17	**FYCR-10**	**FYCRS-10**
FYCJ-10	**FYCJS-10**		30	14	15	0.6	6950	8200	7800	0.067	17	**FYCJ-10**	**FYCJS-10**
FYCR-12	**FYCRS-12**	12	32	14	15	0.6	12600	21000	8050	0.076	19	**FYCR-12**	**FYCRS-12**
FYCJ-12	**FYCJS-12**		32	14	15	0.6	7650	9650	8050	0.074	19	**FYCJ-12**	**FYCJS-12**
FYCR-15	**FYCRS-15**	15	35	18	19	0.6	18700	29300	11800	0.105	23	**FYCR-15**	**FYCRS-15**
FYCJ-15	**FYCJS-15**		35	18	19	0.6	12200	14100	11800	0.097	23	**FYCJ-15**	**FYCJS-15**
FYCR-17	**FYCRS-17**	17	40	20	21	1	21100	35000	14300	0.145	25	**FYCR-17**	**FYCRS-17**
FYCJ-17	**FYCJS-17**		40	20	21	1	13700	16700	14300	0.14	25	**FYCJ-17**	**FYCJS-17**
FYCR-20	**FYCRS-20**	20	47	24	25	1	28900	50000	20800	0.255	29	**FYCR-20**	**FYCRS-20**
FYCJ-20	**FYCJS-20**		47	24	25	1	18200	22600	20800	0.245	29	**FYCJ-20**	**FYCJS-20**
FYCR-25	**FYCRS-25**	25	52	24	25	1	32500	60000	22900	0.285	34	**FYCR-25**	**FYCRS-25**
FYCJ-25	**FYCJS-25**		52	24	25	1	22200	31000	22900	0.275	34	**FYCJ-25**	**FYCJS-25**
FYCR-30	**FYCRS-30**	30	62	28	29	1	47500	96000	33000	0.48	51	**FYCR-30**	**FYCRS-30**
FYCJ-30	**FYCJS-30**		62	28	29	1	31500	47000	33000	0.47	51	**FYCJ-30**	**FYCJS-30**
FYCR-35	**FYCRS-35**	35	72	28	29	1	49000	106500	36500	0.64	58	**FYCR-35**	**FYCRS-35**
FYCJ-35	**FYCJS-35**		72	28	29	1	33000	52500	36500	0.635	58	**FYCJ-35**	**FYCJS-35**
FYCR-40	**FYCRS-40**	40	80	30	32	1	54500	126000	43500	0.88	66	**FYCR-40**	**FYCRS-40**
FYCJ-40	**FYCJS-40**		80	30	32	1	38500	67500	43500	0.865	66	**FYCJ-40**	**FYCJS-40**
FYCR-45	**FYCRS-45**	45	85	30	32	1	57500	139000	46500	0.93	72	**FYCR-45**	**FYCRS-45**
FYCJ-45	**FYCJS-45**		85	30	32	1	40000	73000	46500	0.91	72	**FYCJ-45**	**FYCJS-45**
FYCR-50	**FYCRS-50**	50	90	30	32	1	60500	152000	49500	0.995	76	**FYCR-50**	**FYCRS-50**
FYCJ-50	**FYCJS-50**		90	30	32	1	41500	78000	49500	0.965	76	**FYCJ-50**	**FYCJS-50**

Remarks : Grease is sealed in for the Roller follower with seals. Roller follower without seal does not have grease.

www.bergab.ru Берг АБ bergab@ya.ru Тел. (495)-228-06-21, факс (495) 223-3071

MEMO

rgab.ru Берг АБ bergab@ya.ru Тел. (495)-228-06-21, факс (495) 2

rgab.ru Берг АБ bergab@ya.ru Тел. (495)-228-06-21, факс (495) 2

www.bergab.ru Берг АБ bergab@ya.ru Тел. (495)-228-06-21, факс (495) 223-3071

B-Ⅰ Selection Guide to NSK Ball Screw

1. Features of NSK Ball Screws ··· B1
2. Structure of a Ball Screw ··· B3
2.1 Ball Recirculation System ··· B4
2.2 Preload System ··· B5
3. Ball Screw Classification and Series ··· B7
3.1 Ball Screw Classification ··· B7
3.2 Ball Screw Series ··· B9
4. Procedures to Select Ball Screw ··· B16
4.1 Flow Chart for Selection ··· B16
4.2 Accuracy Grades ··· B17
4.3 Axial Play ··· B18
4.4 Screw Shaft Diameter, Lead, and Stroke ··· B19
4.5 Manufacturing Capability for Screw Shaft ··· B25
4.6 Outside Shapes of Ball Nut ··· B26
4.7 Shaft End Configuration ··· B27
5. When Placing Orders ··· B31
5.1 When Ordering Standard Series ··· B31
5.2 When Ordering Custom Made Ball Screws ··· B33
6. Dimension Table and Reference Number of Standard Stock Ball Screws ··· B37
6.1 A Series ··· B39
6.2 KA Series: Ball Screws Made of Stainless Steel ··· B155
6.3 S Series ··· B181
6.4 V Series ··· B232
6.5 Rolled Ball Screw R Series ··· B255
6.6 Accessories ··· B273
6.7 Thrust Angular Contact Ball Bearing for Ball Screw ··· B299
7. Custom Made Ball Screw Series: Dimension Table and Model Number ··· B307
7.1 T Type (Return tube type, fine lead) Ball Screws ··· B309
7.2 D Type (Deflector type, fine lead) Ball Screws ··· B353
7.3 M Type (Miniature・fine lead) Ball Screws ··· B375
7.4 L Type (Medium・high helix lead) Ball Screws ··· B383
7.5 U Type (High helix・ultra high helix lead) Ball Screws ··· B399
7.6 HMC Series (Ball screw for high-speed machine tools) ··· B405
7.7 HTF Series (Ball screw for high load drive) ··· B411
8. Special Ball Screws: Dimension Table and Model Numbers ··· B417
8.1 MF Series (Ball screw equipped with NSK K1™ lubrication unit) ··· B419
8.2 NSK S1™Series Precision Ball Screw ··· B455
8.3 NDT,NDD Series (Ball screw with rotatable nut) ··· B469
8.4 Ball Screw with Spline: "Robotte" ··· B477
8.5 Hollow Shaft Ball Screw ··· B489
8.6 Special Ball Screws ··· B495
9. Guide to Technical Services ··· B496
10. Precautions When Handling Ball Screws ··· B497

B BLOCK

Ball Screws

B-Ⅱ Technical Description of Ball Screws

1. Accuracy ··· B499
1.1 Lead Accuracy ··· B499
1.2 Thermal Expansion and Target Value of Specified Travel ··· B501
1.3 Mounting Accuracy and Tolerance of Ball Screws ··· B502
2. Static Load Limitation ··· B505
2.1 Buckling Load ··· B505
2.2 Yield by Tensional/Compressive Load ··· B508
2.3 Permanent Deformation of the Ball Contact Point ··· B508
3. Permissible Rotational Speed ··· B509
3.1 Critical speed of the Screw Shaft ··· B509
3.2 d・n Value ··· B512
4. Supporting conditions for Calculation of Buckling Load and Critical Speed ··· B513
5. Life (dynamic load limitation) ··· B515
5.1 Life of Ball Screw ··· B515
5.2 Fatigue Life ··· B515
5.3 Materials and Hardness ··· B517
5.4 Wear Life ··· B517
6. Preload and Rigidity ··· B518
6.1 Elastic Deformation of the Preloaded Ball Screw ··· B518
6.2 Rigidity of the Feed Screw System ··· B519
7. Friction Torque and Drive Torque ··· B523
7.1 Friction Torque ··· B523
7.2 Drive Torque ··· B524
8. Lubrication of Ball Screw ··· B525
9. Dust Prevention for Ball Screw ··· B526
10. Rust Prevention and Surface Treatment of Ball Screws ··· B526
11. Ball Screw Specifications for Special Environments ··· B527
11.1 Clean Environment ··· B527
11.2 Measures for Use under Vacuum ··· B528
12. Noise and Vibration ··· B529
12.1 Consideration to Lowering Noise ··· B529
12.2 Consideration to Ball Screw Support System ··· B530
13. Installation of Ball Screw ··· B531
13.1 Recommendation of Installation Accuracy ··· B531
13.2 Adjustment and Test Operation ··· B534
13.3 Inserting Ball Nut into Rolled Screw Shaft ··· B535
13.4 Installation of Standard Ball Screw and Support Unit ··· B537
14. Precautions for Designing Ball Screw ··· B538
14.1 Safety System ··· B538
14.2 Design Cautious to Assembling Ball Screw ··· B538
14.3 Effective Stroke of Ball Screw ··· B539
14.4 Matching after Delivery ··· B539
15. Drills for Selecting Ball Screw ··· B540
16. Reference ··· B550

www.bergab.ru Берг АБ bergab@ya.ru Тел. (495)-228-06-21, факс (495) 223-3071

B-Ⅰ Selection Guide to NSK Ball Screw

www.bergab.ru Берг АБ bergab@ya.ru Тел. (495)-228-06-21, факс (495) 223-3071

B-Ⅰ-1 Features of NSK Ball Screws

① Quick delivery

Standardized items are in stock for short lead time.

- Precision ball screws:···A Series, KA Series, S Series, V Series,
- Rolled ball screws:·····R Series

② Competitive prices

NSK reduces cost by well-planned mass production of standardized items. We rank the best in the world production of ordered items. We are able to offer our products at competitive prices by producing similar items in the same production group.

③ Unparalleled accuracy

When the accuracy is required, NSK utilizes its unique grinding technique and measuring equipment for the product in the topnotch precision.

④ Superb durability

NSK uses thoroughly purified alloy steel, and applies special case hardening heat treatment to it for superb durability.

⑤ No backlash, and unparalleled rigidity

NSK ball screws use gothic-arch groove as shown in Fig. I-1.1. Providing controlled preload is easy, thanks to this gothic-arch groove, and appropriate rigidity with no backlash can be obtained. As the Gothic-arch also minimizes the clearance between the balls and the grooves, the back lash is controlled to minimal without applying preload.

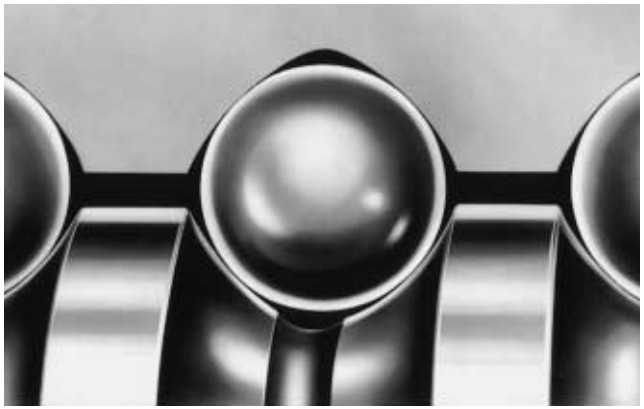

Fig. Ⅰ-1•1 Ball groove profile of NSK ball screw

⑥ Smooth movement assures high efficiency

Balls are slightly wedging into grooves of the nut and screw, as they enter to load zone at their recirculation, causing minute vibration, when the circular-arc groove is used. But this phenomenon does not happen in the gothic-arch groove. This, along with the low friction that is the inherent nature of the ball screw, is accountable for the smooth and highly efficient conversion of motion as shown in Fig. Ⅰ-1•2.

⑦ Abundant accessory units available

Utilizing bearing technology, NSK produces high quality support units (for light load type to be used for small equipment and heavy load type to be used for machine tools) which are exclusive for ball screws. These units are standardized and always in stock.

NSK also offers quality-assured accessories such as lock nuts to tighten bearings, travel stoppers to prevent overrun, and sealing units to cool hollow shaft ball screws.

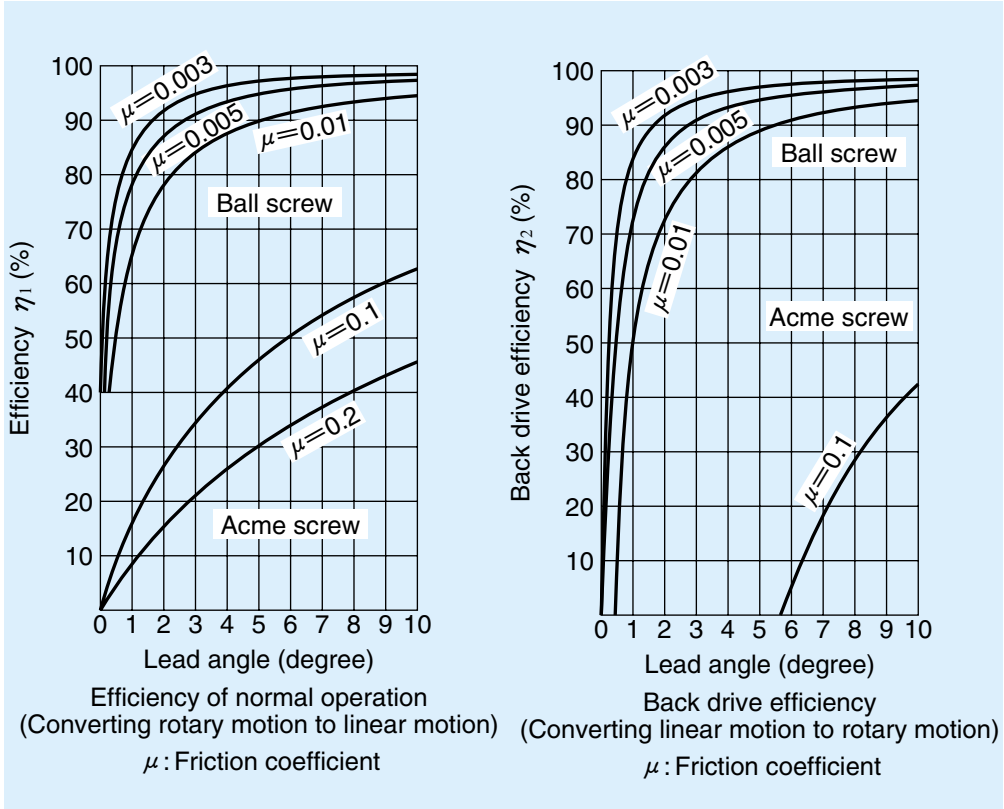

Fig. Ⅰ-1•2 Mechanical efficiency of ball screws

www.bergab.ru Берг АБ bergab@ya.ru Тел. (495)-228-06-21, факс (495) 223-3071

www.bergab.ru Берг АБ bergab@ya.ru Тел. (495)-228-06-21, факс (495) 223-3071

B-I-2 Structure of a Ball Screw

Balls are placed between the screw shaft and nut, and roll. This system is called a "ball screw." To keep the balls recirculating continually, this system requires a screw shaft, a nut, balls, and recirculation components as basic items. A ball screw has the following functions.

① Converting motion: Changing rotary motion to linear motion (normal operation); Changing linear motion to rotary motion efficiently (back-drive operation).

② Increasing power: A small torque is converted to a large thrust force.

③ Positioning: Sets accurate position in linear motion.

B-I-2.1 Ball Recirculation System

Ball recirculation system is categorically most important, as well as the preload system, to classify the structure of ball screw.

As shown in Table I-2.1, three types of ball recirculation system are used for NSK ball screw.

Table I-2•1 Ball screw recirculation system

Recirculation method	Ball return tube type	Deflector type	End cap type
Structure	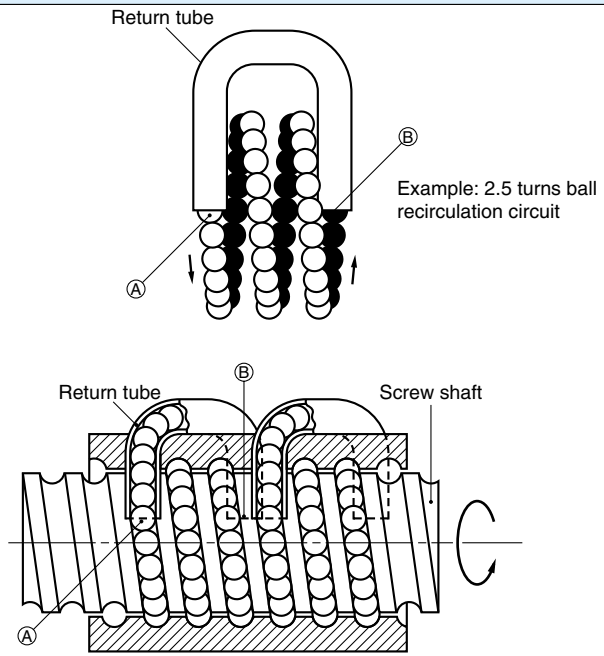 Number of turns of balls i_1: Number of turns between Ⓐ to Ⓑ Number of circuit i_2: Number of the tube Effective turns of balls i_0 : $i_0 = i_1 \times i_2$ In the above Figure, i_2 = 2.5; i_2 = 2. Therefore i_0 = 5	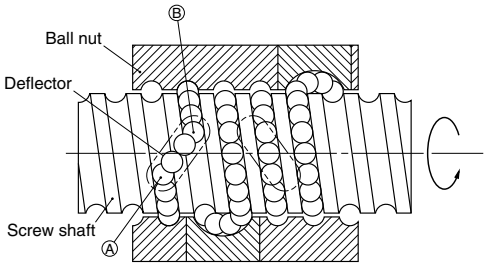 Number of turns of balls i_1: 1(one) for deflector type, the number of turns is between Ⓐ to Ⓑ. Number of circuit i_2: number of deflector Effective turns i_0 : $i_0 = 1 \times i_2$	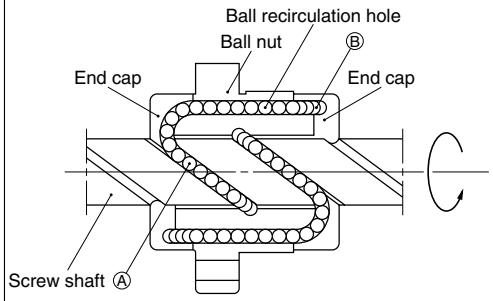 Number of turns of balls i_1: Number of turns of balls is Ⓐ to Ⓑ Number of circuit i_2: Number of start i_1, which is the number of independent threads of the screw Effective turns i_0 : $i_0 = i_1 \times i_2 = i_1 \times i_3$
Characteristics	Suitable for mass production which cuts costs	Compact nut outside diameter For small lead	For screws with high helix lead and multiple start threads
Number of turns of balls	Several types	Only one turn	Several types
Circuit (number of rows)	Several types	Several types	Several types
Nut outside diameter	Large	Small	Medium size
Output	High	Low	Somewhat suitable

www.bergab.ru Берг АБ bergab@ya.ru Тел. (495)-228-06-21, факс (495) 223-3071

www.bergab.ru Берг АБ bergab@ya.ru Тел. (495)-228-06-21, факс (495) 223-3071

B-I-2.2 Preload system

There are four methods to apply preload for the NSK ball screw depending on the application.

Table I-2•2 Preload system for ball screw

Preload system	Double nut preload (D Preload)	Spring preloaded double nut (J Preload)	Offset preload (Z Preload)	Oversize ball preload (P Preload)
Structure	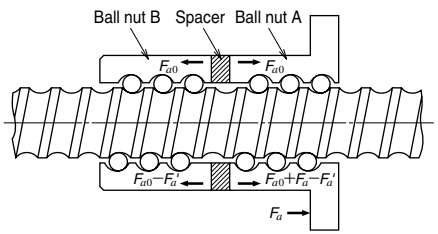 Double nut preload (D Preload) 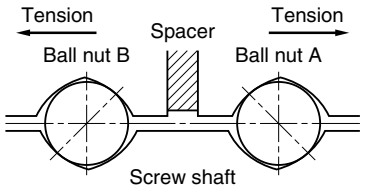 Ball contact under double nut D Preload	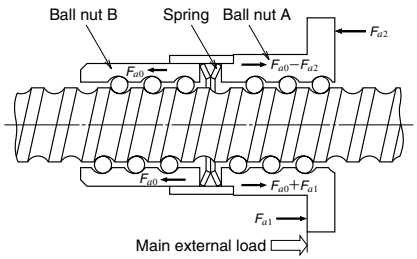 Spring preloaded double nut (J Preload) 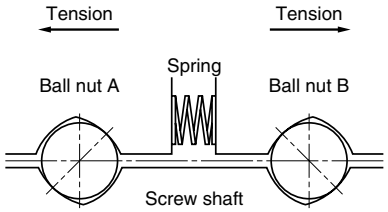 Ball contact under the spring preloaded double nut (J Preload)	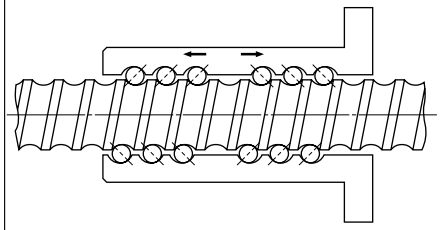 Offset preload (Z Preload) 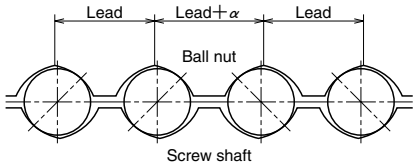 Ball contact under offset Z Preload	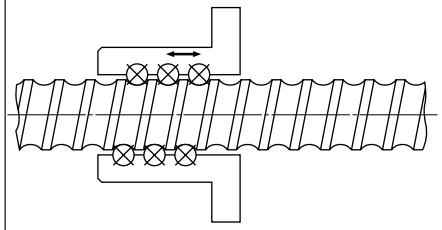 Oversize ball preload (P Preload) 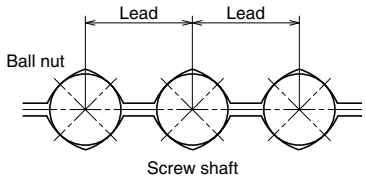 Ball contact under oversize ball P Preload Spacer ball (1:1) is standard to improve smoothness in operation, excluding those with short turns of balls. 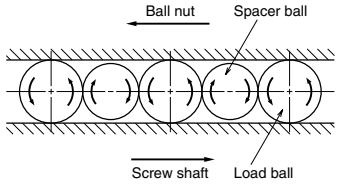
Description	Uses two nuts, and insert a spacer between them to apply preload. In general, a spacer is thicker (by the deformation equivalent to the preload) than the actual space between two nuts. On the contrary, a thin spacer is inserted in some cases.	A spring is used as a spacer of D Preload. (Must be used with discretion in its varied rigidity by load direction.)	To apply preload, the lead near the center of the nut is enlarged by the volume equivalent to preload (α). (Uses a single nut to create a preload similar to D preload.)	Balls slightly larger than the space of the ball groove (over-size balls) are inserted to apply preload by balls' four-point contact.
Nut length	Long	Long	Medium	Short
Torque characteristics	Fair	Excellent	Fair	Fair
Rigidity	Excellent	Poor	Excellent	Fair

B 6

www.bergab.ru Берг АБ bergab@ya.ru Тел. (495)-228-06-21, факс (495) 223-3071

www.bergab.ru Берг АБ bergab@ya.ru Тел. (495)-228-06-21, факс (495) 223-3071

B-I-3 Ball Screw Series

B-I-3.1 Ball Screw Classification

Ball screw	Standard stock series (screw shaft and standard nut)	A Series (T, D, L, U, M Types) Finished shaft end		Accuracy grade: C5 grade or better Can be combined with support units.	Page B39
		KA Series (T, D, L, U, M Types) Finished shaft end		Uses stainless steel, highly effective in rust-prevention.	Page B155
		S Series (T, D, L, U, M Types) Blank shaft end		Accuracy grade: C5 grade or better Custom-ordered shaft end processing is available	Page B181
		V Series (low-priced standard ball screws)		VFA (finished shaft end) Low price, accuracy grade Ct7	Page B232
				RMA (precision rolled miniature ball screw, finished shaft end)	Page B240
				RMS (precision rolled miniature ball screw, blank shaft end)	
		R Series (T and U Types)/ Blank shaft end		Low-price (Rolled ball screw)	Page B255
	Standard accessory	Support units	For small equipment, light load For machine tools, heavy load	Support bearing units for ball screw	Page B273
		Lock nut			Page B295
		Grease unit		Lubricant grease for ball screws	Page B297
		Travel stopper (by order)		Safety measure against overrun	Page B298
		Ball screw support bearing, thrust angular contact ball bearings		Support bearing for ball screws	Page B299
	Custom made ball screws	Standard nut series	T Type (Tube type standard ball screws)	This ball recirculation type is ideal for large volume production for cost reduction.	Page B309
			D Type (Deflector type standard ball screws)	Compact nut outside diameter	Page B353
			M Type (Precision miniature, fine lead ball screws)	Accurate positioning for small equipment	Page B375
			L Type - Lead is larger than 50% of the shaft diameter and smaller than shaft diameter (Precision, medium lead and high helix lead ball screws)	Ideal for high-speed feed	Page B383
			U Type - Lead exceeds the shaft diameter (Precision, high helix and sultra high helix lead ball screws)		Page B399
		Application oriented nut series	HMC Series (Ball screws for high-speed machine tools)	High-speed, low vibration, low noise High rigidity, high load carrying capacity, compact nut	Page B405
			HTF Series (Ball screws for high-load drive)	Exclusively developed for high loads: Electric drive became possible for the use under high load.	Page B411
	Special ball screws	MF Series (Ball screw equipped with NSK K1 Lubrication Unit)		Maintenance-free, environment-friendly	Page B419
			Custom-made item		Page B425
			Standardized in stock — WFA Series (T and U Types) Finished shaft end	Accuracy grade C5, can be combined with support units	Page B441
		NSK S1™ Series Precision ball screw		Low noise, highly smooth operation	Page B455
		NDT, NDD Series (Nut-rotating ball screws)		Long stroke, for high-speed operation	Page B469
		Ball screw with a spline "Robotte"		For various actuators	Page B475
		Hollow shaft ball screw		Prevents thermal expansion of the ball screw to achieve highly precise positioning.	Page B489

Table I-3.1 shows basic types of NSK ball screws.

Table I-3•1 Basic NSK ball screws

Type	Lead size	Recirculation component	Preload method
T Type	Fine, Medium	Tube	D, P, Z
D Type	Fine, Medium	Deflector	D, P, Z
L Type	Medium, High helix	Tube	D, P
U Type	High helix, Ultra high helix	Tube, end cap	P
M Type	Fine	Deflector	P

Remarks **Table I-3•2 Lead classification**

Classification	Lead ratio K=lead *l* / shaft diameterd
Fine	K<0.5
Medium	0.5≦K<1
High helix	1≦K<2
Ultra high helix	2≦K

B 8

www.bergab.ru Берг АБ bergab@ya.ru Тел. (495)-228-06-21, факс (495) 223-3071

www.bergab.ru Берг АБ bergab@ya.ru Тел. (495)-228-06-21, факс (495) 223-3071

B-I-3.2 Ball Screw Series

(1) Standard stock series (immediate delivery, low-price)

●Ball screws

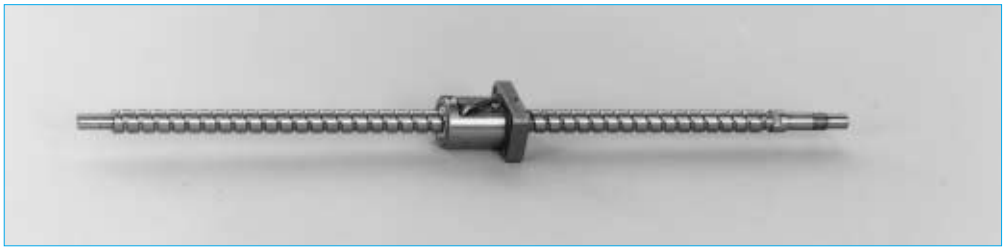

Fig. I-3•1 A Series Finished shaft end Page B39

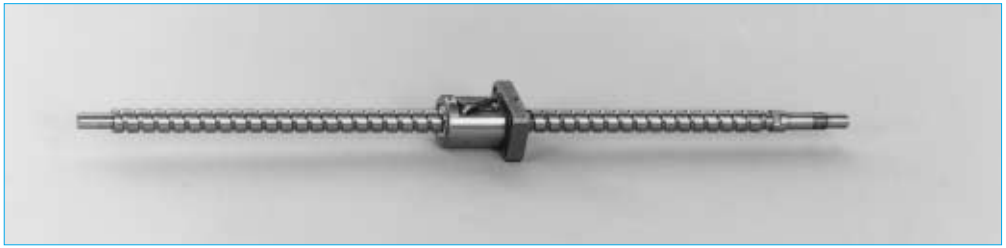

Fig. I-3•2 KA Series Finished shaft end Page B155

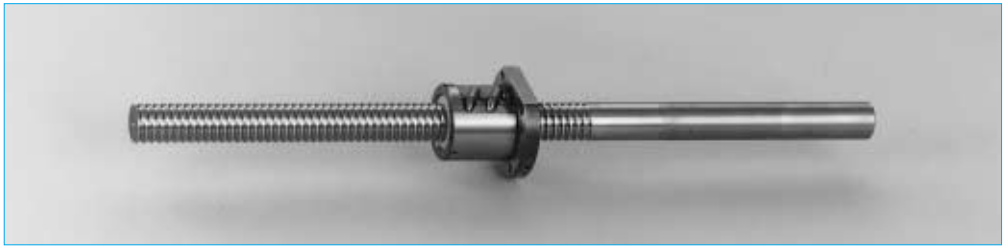

Fig. I-3•3 S Series Blank shaft end Page B181

Fig. I-3•4 V Series VFA finished shaft end Page B232

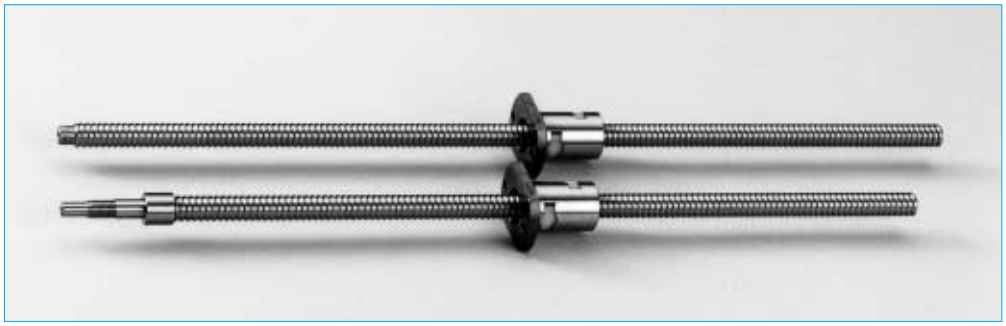

Fig. I-3•5 V Series RMA finished shaft end RMS blank shaft end Page B240

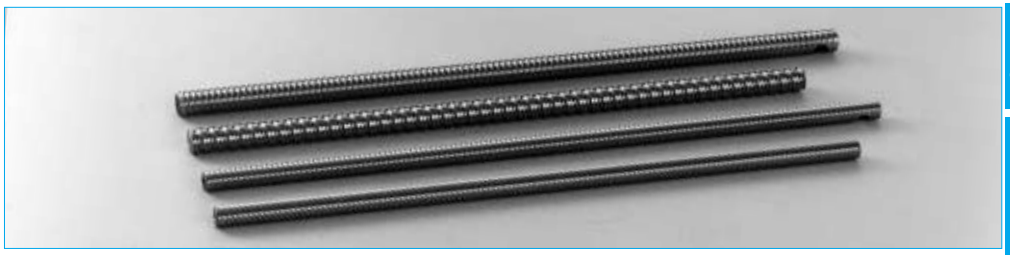

Fig. I-3•6 R Series Blank shaft end Page B255

Fig. I-3•7 R Series Nut assembly

www.bergab.ru Берг АБ bergab@ya.ru Тел. (495)-228-06-21, факс (495) 223-3071

www.bergab.ru Берг АБ bergab@ya.ru Тел. (495)-228-06-21, факс (495) 223-3071

●Standard accessory

Fig. I-3•8 Support unit, for small equipment (light load) Page B281

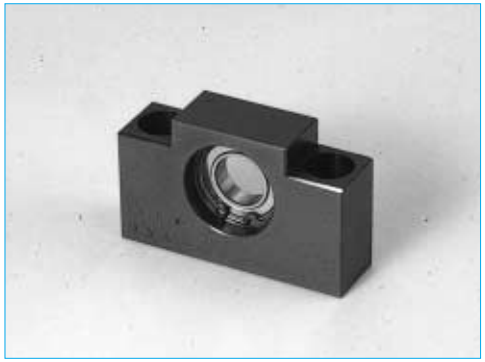

Fig. I-3•9 Support unit for VFA (simple support side) Page B288

Fig. I-3•10 Support bearing kit for RMA Page B287

Fig. I-3•11 Support unit, for machine tools (heavy load) Page B293

Components for ball screw support bearing are available.

Fig. I-3•12 Lock nuts A Type Page B295

Fig. I-3•13 Lock nuts S Type Page B296

Fig. I-3•14 Grease unit Page D20

Fig. I-3•15 NSK grease Page B297, D20

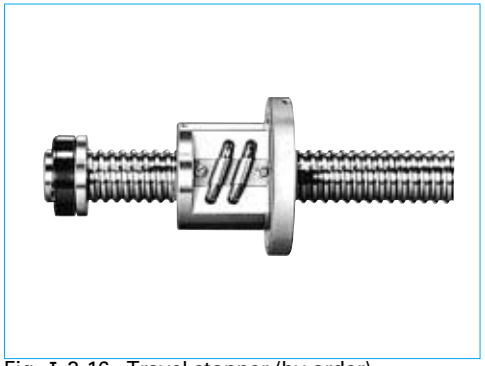

Fig. I-3•16 Travel stopper (by order) Page B298

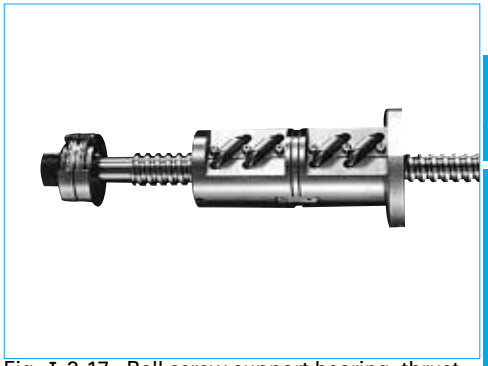

Fig. I-3•17 Ball screw support bearing, thrust angular contact ball bearings Page B299

www.bergab.ru Берг АБ bergab@ya.ru Тел. (495)-228-06-21, факс (495) 223-3071

www.bergab.ru Берг АБ bergab@ya.ru Тел. (495)-228-06-21, факс (495) 223-3071

(2) Custom made ball screws: Standard ball nut series

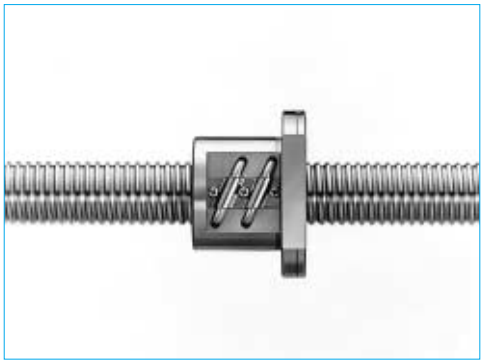

Fig. I-3•18 T Type
(Tube type, standard ball screw) Page B309

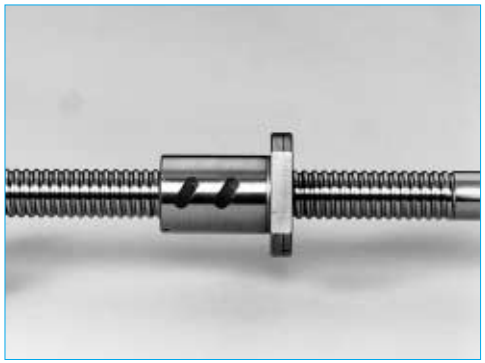

Fig. I-3•19 D Type
(Deflector type, standard ball screw) Page B353

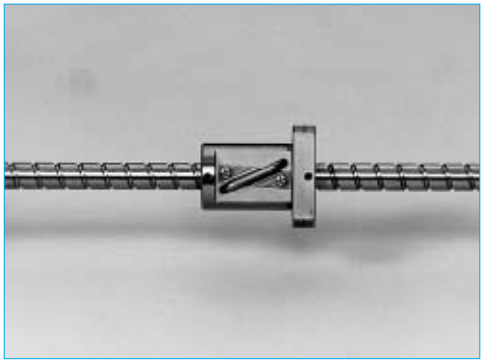

Fig. I-3•20 L Type (Precision, medium and high helix lead ball screws) Page B383

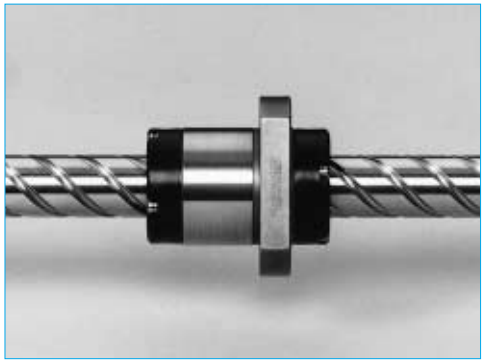

Fig. I-3•21 U Type (Precision, high helix and ultra high helix lead ball screws) Page B399

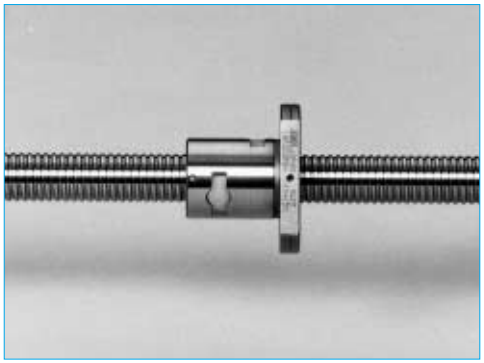

Fig. I-3•22 M Type
(Precision miniature, fine lead ball screws)
Page B375

(3) Custom made ball screws: Application oriented nut series

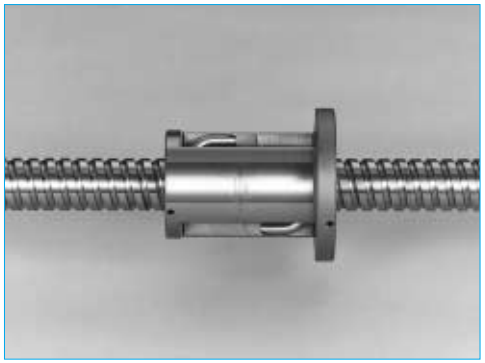

Fig. I-3•23 Ball screw for high-speed machine tools (HMC Series) Page B405

Fig. I-3•24 Ball screw for high load drive (HTF Series) Page B411

www.bergab.ru Берг АБ bergab@ya.ru Тел. (495)-228-06-21, факс (495) 223-3071

www.bergab.ru Берг АБ bergab@ya.ru Тел. (495)-228-06-21, факс (495) 223-3071

(4) Special ball screws

Fig. I-3•25 NDT, NDD Series (Rotatable nut ball screws) Page B469

Fig. I-3•26 Ball screw with spline "Robotte" Page B477

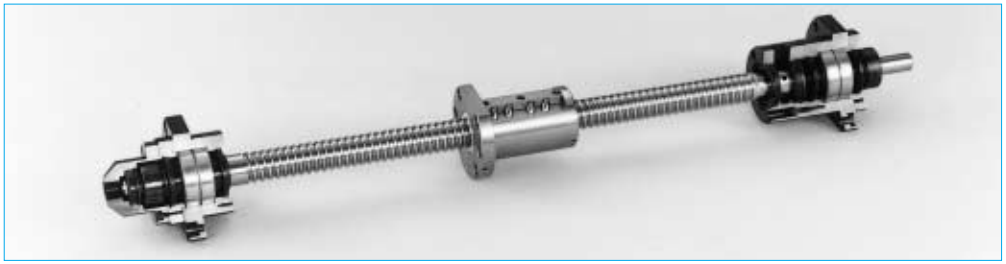

Fig. I-3•27 Hollow shaft ball screw Page B489

B-I-4 Procedures to Select Ball Screw

B-I-4.1 Flow Chart for Selection

There are several methods to select a ball screw which is most suitable both in type and size for a specific use. The chart below is one of the selection methods. To take advantage of prompt delivery and reasonable prices, this method focuses on the standardized series that are available in stock.
NSK offers a ball screw selection program, and also has a service to select appropriate items using data file compiled by our knowledge and experience.

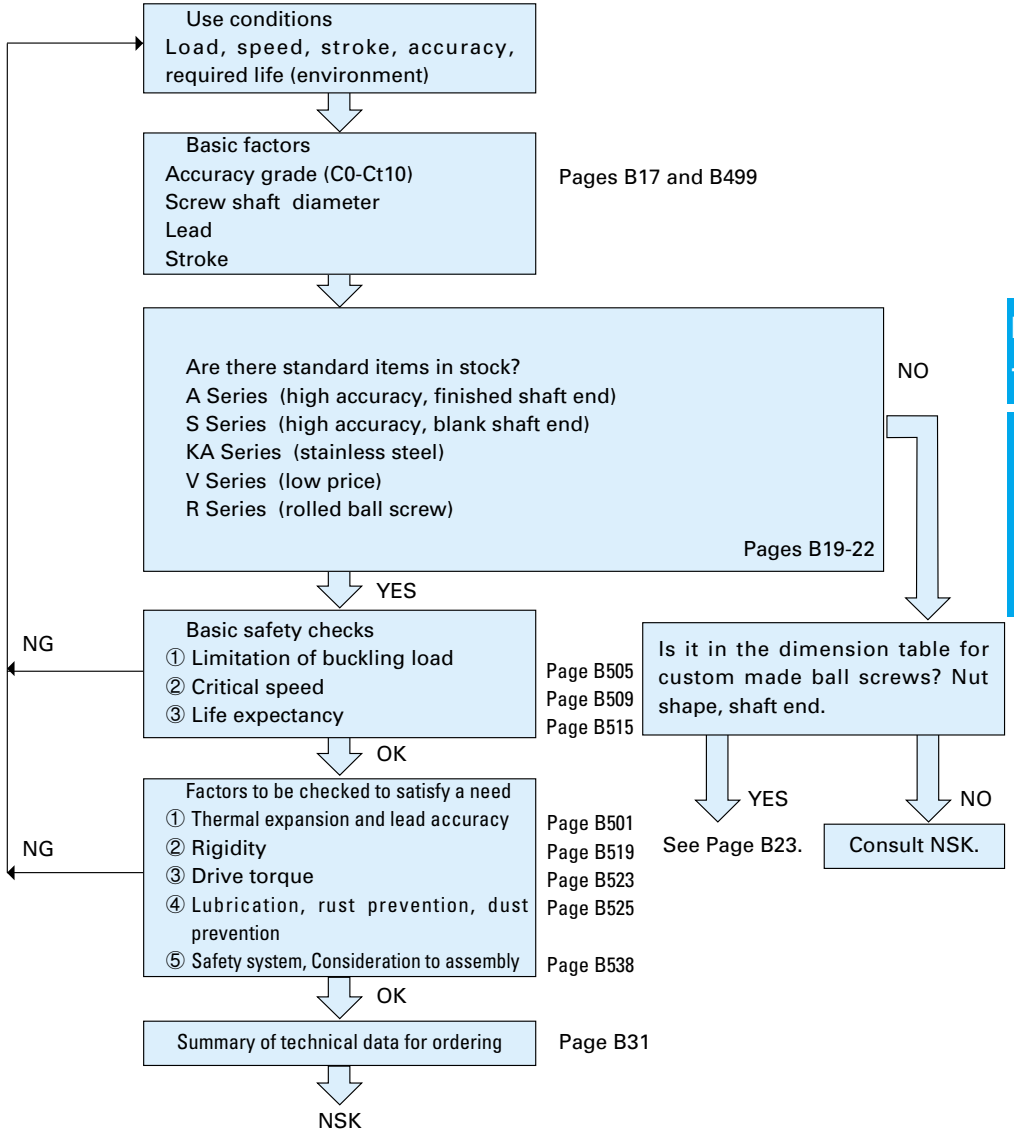

www.bergab.ru Берг АБ bergab@ya.ru Тел. (495)-228-06-21, факс (495) 223-3071

www.bergab.ru Берг АБ bergab@ya.ru Тел. (495)-228-06-21, факс (495) 223-3071

B-I-4.2 Accuracy Grades

Table I-4•1 shows examples of how to select accuracy grade for a specific use. These practical cases are based on NSK's experience. Circle indicates the range of the accuracy grade in actual use. Double circle indicates accuracy grades most frequently used among cases marked with a single circle. These symbols help to select the accuracy grade of ball screws temporarily. To confirm whether a specific ball screw accuracy grade satisfies requirements in positioning accuracy in actual use, refer to "Technical Description" and "Mean travel deviation and travel variation." (Page B499)

Table I-4•1 Accuracy grades of ball screw and their application

Application	NC machine tools																			
	Lathe		Milling machine Boring machine		Machining center		Drilling machine		Jig boring machine		Grinder		Electric discharge machine		Wire cutting machine Electric discharge machine		Punch press	Laser cutting machine		Woodworking machine
Name of axis	X	Z	XY	Z	XY	Z	XY	Z	XY	Z	XY	Z	XY	Z	XY	Z	XY	XY	Z	
Accuracy grade Grade C0	○								○	○	○									
C1	○		○		○				◎	◎	○	○	○		○	○				
C2	○		○	○	○	○					◎	○	○	○	◎	○				
C3	◎	○	◎	○	○	○	○					◎	◎	◎	◎	◎	○	○	○	
C5	◎	◎	◎	◎	◎	◎	◎	◎						◎		○	◎	◎	◎	◎
Ct7								○												◎
Ct10																				○

Application	General industrial machines , Machines for specific use	Semiconductor/associated industry					Industrial robots					Steel mills equipment	Plastic injection molding machine	Three-dimensional coordinate measuring machine	Office machine	Image processing equipment	Nuclear power		Aircraft
		Lithographic machine	Chemical processing equipment	Wire bonder	Prober	Electronic component inserting machine	Printed circuit board drilling machine	Cartesian type		Articulate type		SCARA type						Fuel rod control	Mechanical snubber	
								Assembly	other purposes	Assembly	other purposes									
Accuracy grade Grade C0		○			○										○		○			
C1		◎		◎	◎		○								◎		◎			
C2				○	◎	○	○	○							○					
C3	○		○			○	◎	○		○		○						○		○
C5	◎		○			◎	○	◎	○	◎	○	○		○		○		◎		◎
Ct7	◎		◎					○	◎	○	◎	◎	○	◎		◎		○	◎	
Ct10	○		○						○				◎	○		○			○	

B-I-4.3 Axial Play

Table I-4•2 indicates combinations of NSK ball screw accuracy grades and axial play. Select an axial play which satisfies the required accuracy in backlash, positioning and repeatability. Ranges of available ball thread effective length in relation to accuracy grade and axial play are shown in Table I-4•3. Please note that if the effective length exceeds the range, the axial play may become partially negative (preloaded condition).

Table I-4•2 Combinations of accuracy grades and axial play

Unit: mm

Axial play / Accuracy grade	*Z* 0 (Preload)	*T* 0.005 or under	*S* 0.020 or under	*N* 0.050 or under	*L* 0.3 or under
C0	C0Z	C0T	—	—	—
C1	C1Z	C1T	—	—	—
C2	C2Z	C2T	—	—	—
C3	C3Z	C3T	C3S	—	—
C5	C5Z	C5T	C5S	C5N	—
Ct7	—	—	C7S	C7N	C7L

Table I-4•3 Maximum effective thread length in combination of accuracy grade and axial play

Unit: mm

Screw shaft diameter	Effective length of the screw thread (maximum)				
	Axial play *T*		Axial play *S*		
	C0～C3	**C5**	**C3**	**C5**	**Ct7**
4～6	80	100	80	100	—
8～10	250	200	250	300	—
12～16	500	400	500	600	700
20～25	800	700	1000	1000	1000
32～40	1000	800	2000	1500	1500
50～63	1200	1000	2500	2000	2000
80～125	—	—	4000	3000	3000

Remarks: Refer to Table I-4.12 (Page B25) for the available length of screw shaft (maximum length). Also, axial play of code N does not become partial negative play if it is within the available range of effective ball thread length.

www.bergab.ru Берг АБ bergab@ya.ru Тел. (495)-228-06-21, факс (495) 223-3071

www.bergab.ru Берг АБ bergab@ya.ru Тел. (495)-228-06-21, факс (495) 223-3071

B-I-4.4 Screw Shaft Diameter, Lead, and Stroke

First, temporarily choose a screw shaft diameter and stroke based on the allowable space for ball screw installation. Lead should be set based on the required running speed, and should give some allowance to the maximum rotational speed of the motor.

Table I-4•4 shows the classification of lead.

Table I-4•4 Lead classification

Classification	Lead ratio K= lead l / shaft diameter d
Fine lead	$K<0.5$
Medium lead	$0.5 \leqq K<1$
High helix lead	$1 \leqq K<2$
Ultra high helix lead	$2 \leqq K$

(1) Standard stock series

Table I-4•5 and 6 show "combinations of ball screw shaft diameter and leads" and "range of stroke." From these tables, select closest values to the shaft diameter, lead, and stroke which temporarily had been selected previously. Also, confirm detailed specifications and sizes in "Dimensional table of standard items" (Page B39).

Table I-4•5 Standard stock ball screws: Combinations of screw shaft diameter and leads

Unit: mm

Screw shaft diameter \ Lead	1	1.5	2	2.5	4	5	6	8	10	12	16	20	25	32	40	50
4	●															
6	●															
8	●	●	●													
10			●	●	●											
12			●	●		●			●							
14						●		●								
15									●			●				
16			●	●		●					●			●		
20					●	●			●			●			●	
25					●	●			●			●	●			●
28						●	●									
32						●	●	●	●				●	●		
36									●							
40						●		●	●	●						
45									●							
50									●							

Remark: See Table I-4•7 for KA (stainless) Series.

Strips in the Tables indicate a range of maximum stroke of each series and each model number. Page numbers are shown at the end of the strips.

Table I-4•6 Maximum stroke of standard stock ball screws A and S series

Unit: mm

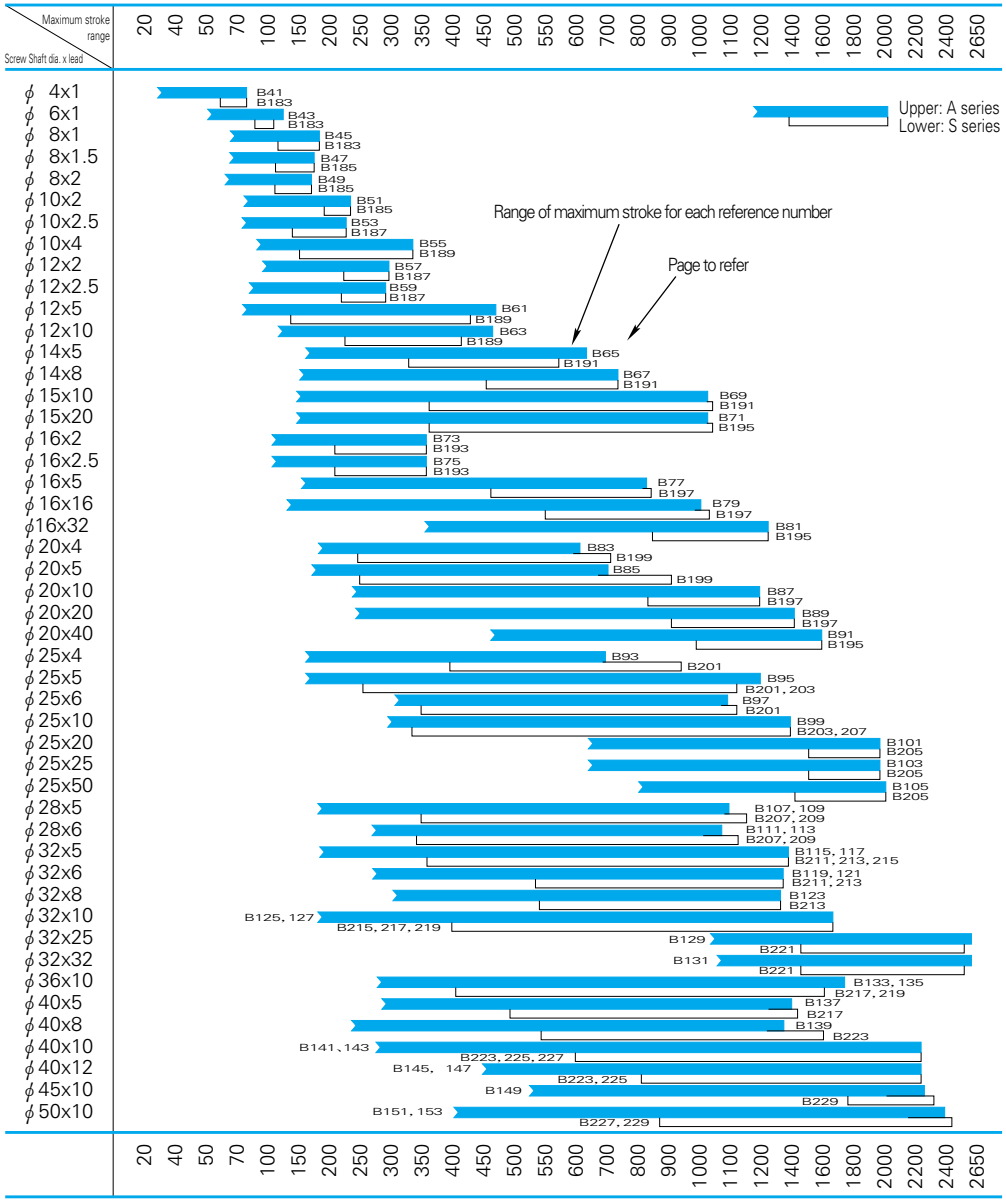

Refer to Table I-4•9 for KA series.

B 20

www.bergab.ru Берг АБ bergab@ya.ru Тел. (495)-228-06-21, факс (495) 223-3071

www.bergab.ru Берг АБ bergab@ya.ru Тел. (495)-228-06-21, факс (495) 223-3071

Table I-4•7 KA Series: Combinations of Screw shaft diameter and leads Unit: mm

Screw shaft diameter \ Lead	1	2	4	5	10	20
6	●					
8	●	●				
10		●	●			
12		●		●	●	
15					●	●
16		●				
20						●

Table I-4•9 Range of maximum stroke of the stainless A series (KA series)

Unit: mm

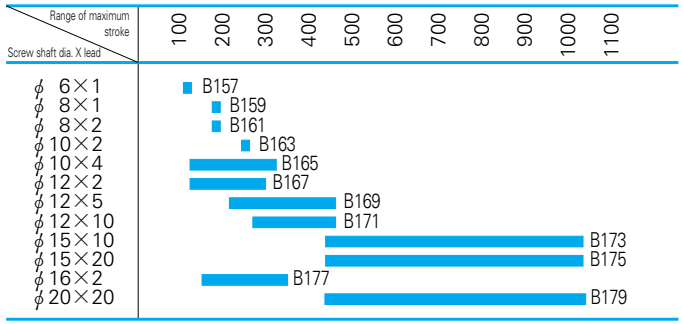

Maximum stroke range for S series is shown in the preceiding page.

Table I-4•8 Rolled ball screw: Combinations of Screw shaft diameter and leads

Unit: mm

Screw shaft diameter \ Lead	3	4	5	6	8	10	12	16	20	25	32	40	50	64	80
10	●			●											
12					●		●								
14		●	●												
15									●						
16						●		●			●				
18					●										
20			●			●			●			●			
25			●			●				●			●		
28				●											
32						●					●			●	
36						●									
40						●						●			●
45							●								
50						●		●					●		

Table I-4•10 Maximum stroke range of standard stock rolled ball screw

Unit: mm

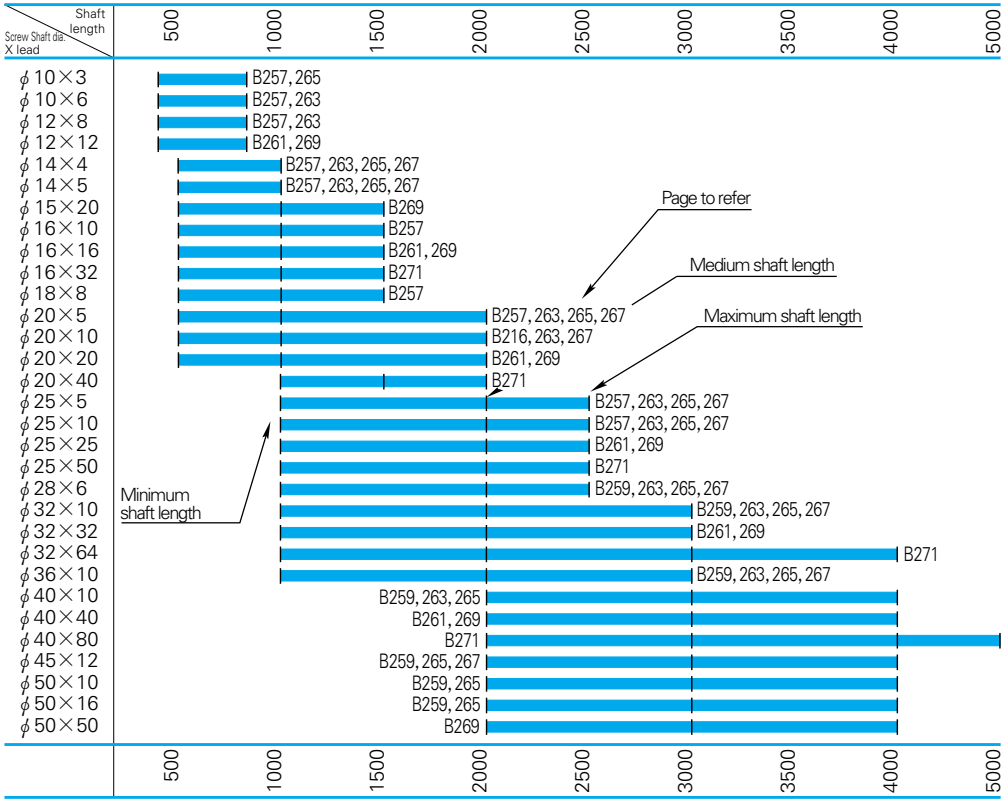

B 22

www.bergab.ru Берг АБ bergab@ya.ru Тел. (495)-228-06-21, факс (495) 223-3071

www.bergab.ru Берг АБ bergab@ya.ru Тел. (495)-228-06-21, факс (495) 223-3071

(2) Custom made standard series

If the item you need is not in the standard series, you require to set each specification for the ball screw.
Follow the selection procedures shown below.
Refer to Page B540 for drills to practice selection.

Select screw shaft diameter, lead, nut.

Table I-4•11 "Combinations of screw shaft diameter of basic type ball screws and leads" ····· See Page B24.
"Dimension of nut" ····· See Page B307.

↓

Select screw shaft length. (setting stroke)

Table I-4•12 "Range of available screw shaft dimensions" ····· See Page B25.

↓

Select the shape of nut.

"Exterior shapes of nut" ····· See Page B26.
"Dimension table of nut" ····· See Page B307.

↓

Select the shaft end shape.

Table I-4•13, 14 "Shapes of standard shaft ends" ··· See Page B27.
Table I-4•15, 16 "Configuration of rolled ball screw shaft end" (reference) ····· See Page B29.

↓

Check for basic safety.

(1) Permissible axial load — See Page B505.
(2) Critical speed — See Page B509.
(3) Life — See Page B515.

↓

Check the factors satisfy required functions?

(1) Thermal displacement and lead accuracy — See Page B501.
(2) Rigidity — See Page B519.
(3) Drive torque — See Page B523.
(4) Lubrication, rust prevention, dust prevention — See Page B525.
(5) Safety system, Consideration to assembly — See Page B538.

↓

Conclusion

"When placing orders" ····· See Page B31.

Table I-4•11 is "Combinations of screw shaft diameter and leads for basic type ball screw." Please consult NSK if you require the types that are not listed in the Table.

Table I-4•11 "Combinations of screw shaft diameter and leads for typical ball screw"

Unit: mm

Screw shaft diameter \ Lead	0.5	1	1.5	2	2.5	3	4	5	6	8	10	12	16	20	25	30	32	40	50	60	64	80
4	M	M																				
6	M	M		M																		
8	M	M	M	M																		
10		M		M	M	T	T		T													
12		M		M	M	M	T	T		T	L	L		U								
14				M		M	T	T		L												
15											L			U				U				
16				M	M		T	T	T		T		L				U		U			
18										T												
20				M			T	T,D	T,D	T	L		L	L				U		U		
25				M			T	T,D	T,D	T	T,D		L	L	L				U			U
28								T	T		T											
32				M			T	T,D	T,D	T,D	T,D	T		L,N	L,N		L,N				U	
36								T	T		T											
40				M				T,D	T,D	T,D	T,D	T	T	H	L,N		L,N	L,N				U
45											T	T		H	H							
50								T,D	T,D	T,D	T,D	T,D	T,F	T,D	L,H N	H	L,N	L,N	L,N			
55											T		F									
63									D	D	T,D	T,D	T,F	T,D F				L	L			
80											T,D	T,D	T	T,D F								
100											D	T,D	T	T,D F	F							
125													T	T	T		T					
140															T		T	T	T			
160																	T	T	T			
200																	T	T	T			
250																		T	T			

T : T Type (Tube type ball screws)
D : D Type (Deflector type ball screws)
L : L Type (High helix lead ball screws)
U : U Type (Ultra high helix lead ball screws)
M : M Type (Deflector type miniature ball screws)
H : HMC Series (Ball screws for high-speed machine tools)
F : HTF Series (Ball screws for high load)
N : NDT Series (Nut rotatable ball screws)

www.bergab.ru Берг АБ bergab@ya.ru Тел. (495)-228-06-21, факс (495) 223-3071

www.bergab.ru Берг АБ bergab@ya.ru Тел. (495)-228-06-21, факс (495) 223-3071

B-I-4.5 Manufacturing Capability for Screw Shaft

Table I-4•12 shows the manufacturing capability for the screw shaft overall length for each accuracy grade.
The capability of large ball screw whose shaft diameter exceeds 100 mm is limited due to the weight. Please consult NSK in such case. Also consult NSK if the screw shaft size you desire exceeds the size listed in Table I-4•12.

Table I-4•12 Manufacturing capability of screw shaft

Unit: mm

Screw shaft diameter \ Accuracy grade	C0	C1	C2	C3	C5	Ct7	rolled ball screw (Ct10)
4	90	110	120	140	140	140	—
6	150	180	200	250	250	250	—
8	240	280	340	340	340	340	—
10	350	400	500	500	500	550	800
12	450	500	650	700	750	800	800
14	600	650	750	800	1000	1000	1000
15	600	700	800	900	1250	1250	1500
16	600	750	900	1000	1500	1500	1500
18	—	—	—	—	—	—	1500
20	850	1000	1200	1400	1900	1900	2000
25	1100	1400	1600	1900	2500	2500	2500
28	1100	1400	1600	1900	2500	2500	2500
32	1500	1750	2250	2500	3200	3200	3000 (4000)
36	1500	1750	2250	2500	3200	3500	3000
40	2000	2400	3000	3400	3800	4300	4000 (5000)
45	2000	2400	3000	3400	4000	4500	4000
50	2000	3200	4000	4500	5000	5750	4000
63	2000	4000	5000	6000	6800	7700	
80		4000	6300	8200	9200	10000	
100		4000	6300	10000	12500	14000	
125				10000	14000	14000	

Remarks: Values in parentheses of rolled ball screw are applicable to the ultra high helix lead (l/d≧2). Refer to dimension tables in B255 and following pages for details. Please note that the range for small leads (3 mm or under) are also limited by the screw length.

B-I-4.6 Outside Shapes of Ball Nut

(1) Flange shape (Fig. I-4•1)
Following types are available. For detailed dimensions, refer to "Dimension table of nut" in Page B307 and following pages.

① **Circular shape I**
Applicable to shaft diameter of 20 mm and larger

② **Circular shape II**
A flatted round flange. Applicable to the screw shaft diameter of 20 mm and larger

③ **Circular shape III**
A circle with two sides flatted. Applicable to M (miniature) Type

④ **Rectangular shape**
Applicable to screw shaft diameter of 16 mm and smaller

(2) Shapes of nut cross section (Fig. I-4•2)
Following types are available. For detailed dimensions, refer to "Dimension table of nut.."

① **Circular (round)**
The ball recirculation components are contained inside the circumference of the nut. It can be inserted in a round hole.

② **Tube-projecting type**
This shape is peculiar to the tube recirculation type. The nut outside diameter is small. However some recess must be given for housing because the ball recirculation tube protrudes from the circumference of the nut.

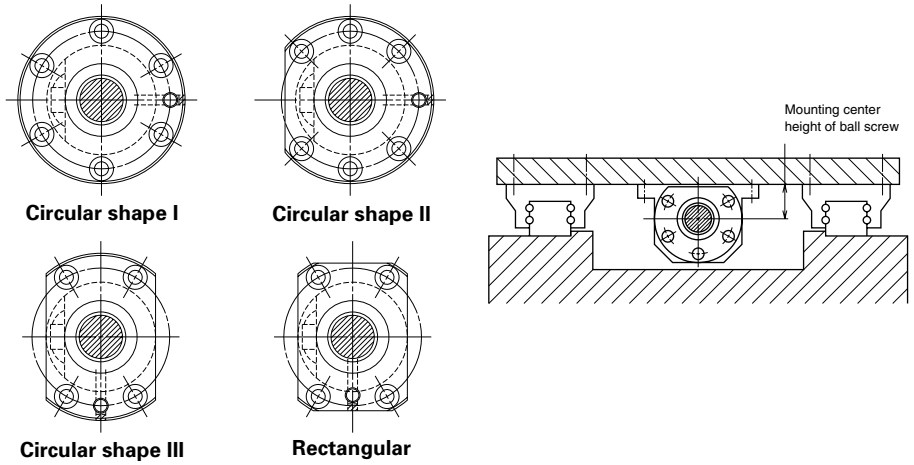

Fig. I-4.1 Flange shape and an installation example

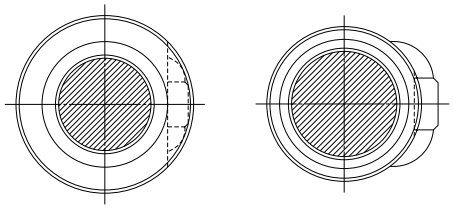

Fig. I-4.2 Shape of the cross section of nut

www.bergab.ru Берг АБ bergab@ya.ru Тел. (495)-228-06-21, факс (495) 223-3071

www.bergab.ru Берг АБ bergab@ya.ru Тел. (495)-228-06-21, факс (495) 223-3071

B-I-4.7 Shaft End Configuration

Table I-4•13 and 14 show shaft end types for NSK standard support units. Table I-4•15 and 16 show rolled screw shaft ends for the same occasion.

Refer to the dimension tables below also in designing shaft ends of standardized S Series.

(1) Standard shaft end dimensions

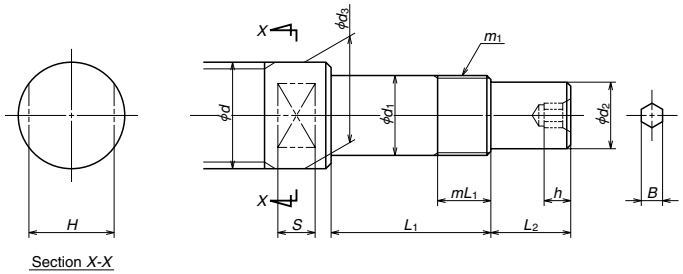

Fig. I-4•3 Configuration of standard shaft end (drive side)

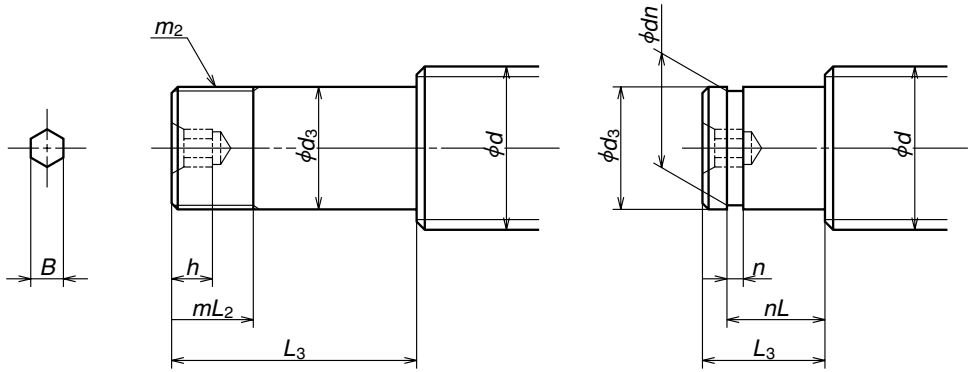

Fig. I-4•4 Standard shaft end configuration (opposite to the drive side)

Table I-4•13 Dimensions of shaft ends (drive side)

Unit: mm

Screw shaft diameter d	Bearing journal: Outside diameter d_1	Bearing journal: Length L_1	Thread: Nominal spec. m_1	Thread: Length mL_1	Drive section: Outside diameter d_2	Drive section: Length L_2	Seal section: Outside diameter d_3	Hexagon hole: Width across flats B	Hexagon hole: Depth h	Wrench flats: Width across flats H	Wrench flats: Length S	Support unit Reference No.	
4	6	22.5	M6×0.75	7	4.5	7.5	9.5			8	4.5	WBK06-01A	WBK06-11
6	6	22.5	M6×0.75	7	4.5	7.5	9.5			8	4.5	WBK06-01A	WBK06-11
8	8	27	M8×1	9	6	10	11.5			10	5.5	WBK08-01A	WBK08-11
10	8	27	M8×1	9	6	10	11.5			10	5.5	WBK08-01A	WBK08-11
12	10	30	M10×1	10	8	15	14			12	6.5	WBK10-01A	WBK10-11
14	12	30	M12×1	10	10	15	15	4	6	12	6.5	WBK12-01A	WBK12-11
15	12	30	M12×1	10	10	15	15	4	6	12	6.5	WBK12-01A	WBK12-11
16	12	30	M12×1	10	10	15	15	4	6	12	6.5	WBK12-01A	WBK12-11
20	15	40	M15×1	15	12	20	19.5	5	7	17	8.5	WBK15-01A	WBK15-11
	17	81	M17×1	23	12	29	20	5	7	22	10	WBK17DF-31	
25	20	53	M20×1	16	15	27	25	6	8	22	10	WBK20-01	WBK20-11
	20	81	M20×1	23	15	39	25	6	8	22	10	WBK20DF-31	
28	20	53	M20×1	16	15	27	25	6	8	22	10	WBK20-01	WBK20-11
	20	81	M20×1	23	15	39	28	6	8	24	12	WBK20DF-31	
32	25	62	M25×1.5	20	20	33	32	8	10	27	12	WBK25-01	WBK25-11
	25	89	M25×1.5	26	20	51	32	8	10	27	12	WBK25DF-31	
	25	104	M25×1.5	26	20	51	32	8	10	27	12	WBK25DFD-31	
36	30	89	M30×1.5	26	25	61	36	10	12	30	13	WBK30DF-31	
	30	104	M30×1.5	26	25	61	36	10	12	30	13	WBK30DFD-31	
40	30	89	M30×1.5	26	25	61	40	10	12			WBK30DF-31	
	30	104	M30×1.5	26	25	61	40	10	12			WBK30DFD-31	
45	35	92	M35×1.5	30	30	63	45	12	14			WBK35DF-31	
	35	107	M35×1.5	30	30	63	45	12	14			WBK35DFD-31	
50	40	92	M40×1.5	30	35	78	50	14	18			WBK40DF-31	
	40	107	M40×1.5	30	35	78	50	14	18			WBK40DFD-31	

Table I-4•14 Dimensions of shaft ends (opposite to the drive side)

Unit: mm

Screw shaft diameter d	Bearing journal: Outside diameter d_3	Bearing journal: Length L_3	Thread for lock nut: Nominal spec. m_2	Thread for lock nut: Length mL_2	Retainer ring groove: Width n	Retainer ring groove: Groove diameter dn	Retainer ring groove: Groove position nL	Hexagonal hole: Width across flats B	Hexagonal hole: Depth h	Support unit Reference No. Numbers in parentheses are bearing reference number.	
8	6	9	—	—	0.8	5.7	6.8	—	—	WBK08S-01	
10	6	9	—	—	0.8	5.7	6.8	—	—	WBK08S-01	
12	8	10	—	—	0.9	7.6	7.9	—	—	WBK10S-01	
14	10	22(12)	—	—	1.15	9.6	9.15	4	6	WBK12S-01	
15	10	22(12)	—	—	1.15	9.6	9.15	4	6	WBK12S-01	
16	10	22(12)	—	—	1.15	9.6	9.15	4	6	WBK12S-01	
20	15	25(13)	—	—	1.15	14.3	10.15	5	7	WBK15S-01	
25	20	19	—	—	1.35	19	15.35	6	8	WBK20S-01	
	20	53	M20×1	16	—	—	—	6	8	WBK20-01	WBK20-11
	20	81	M20×1	23	—	—	—	6	8	WBK20DF-31	
28	20	19	—	—	1.35	19	15.35	6	8	WBK20S-01	
	20	53	M20×1	16	—	—	—	6	8	WBK20-01	WBK20-11
	20	81	M20×1	23	—	—	—	6	8	WBK20DF-31	
32	25	20	—	—	1.35	23.9	16.35	8	10	WBK25S-01	
	25	62	M25×1.5	20	—	—	—	8	10	WBK25-01	WBK25-11
	25	89	M25×1.5	26	—	—	—	8	10	WBK25DF-31	
36	25	20	—	—	1.35	23.9	16.35	10	12	(6205)	
	25	89	M25×1.5	26	—	—	—	10	12	WBK30DF-31	
40	30	22	—	—	1.75	28.6	17.75	10	12	(6206)	
	30	89	M30×1.5	26	—	—	—	10	12	WBK30DF-31	
45	35	25	—	—	1.75	33	18.75	12	14	(6207)	
	35	92	M35×1.5	30	—	—	—	12	14	WBK35DF-31	
50	40	25	—	—	1.95	38	19.95	14	18	(6208)	
	40	92	M40×1.5	30	—	—	—	14	18	WBK40DF-31	

www.bergab.ru Берг АБ bergab@ya.ru Тел. (495)-228-06-21, факс (495) 223-3071

www.bergab.ru Берг АБ bergab@ya.ru Тел. (495)-228-06-21, факс (495) 223-3071

(2) Shaft end configuration of rolled ball screw

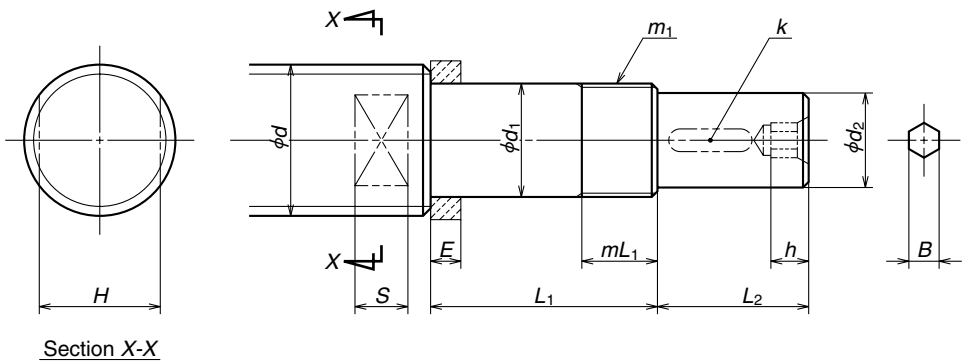

Fig. I-4•5 Rolled ball screw shaft end (drive side)

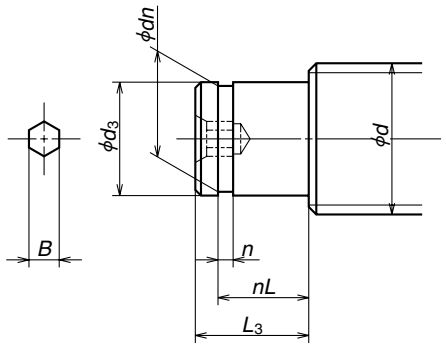

Fig. I-4•6 Shaft end configuration of rolled ball screw (opposite to the drive side)

Table I-4•15 Dimensions of rolled ball screw shaft ends (drive side)

Unit: mm

Screw shaft diameter	Bearing journal		Thread for lock nut		Spacer	Drive section			Hexagonal hole		Wrench flat		Support unit	
	Outside diameter	Length	Nominal spec	Length	Width	Outside diameter	Length	Key width	Width across flats	Depth	Width across flats	Length		
d	d_1	L_1	m_1	mL_1	E	d_2	L_2	k	B	h	H	S	Reference No.	
10	6	27	M6×0.75	7	5.0	4.5	7.5	—	—	—	8	4.5	WBK06-01A	WBK06-11
12	8	32	M8×1	9	5.5	6	10	—	—	—	10	5.5	WBK08-01A	WBK08-11
14	10	35	M10×1	10	5.5	8	15	—	—	—	12	6.5	WBK10-01A	WBK10-11
15	10	35	M10×1	10	5.5	8	15	—	—	—	12	6.5	WBK10-01A	WBK10-11
16	12	35	M12×1	10	5.6	10	15	3	4	6	12	6.5	WBK12-01A	WBK12-11
18	12	35	M12×1	10	5.6	10	15	3	4	6	12	6.5	WBK12-01A	WBK12-11
20	15	50	M15×1	15	10	12	20	4	5	7	17	8.5	WBK15-01A	WBK15-11
25	17	53	M7×1	17	7	15	27	5	6	8	22	10	WBK17-01A	—
	20	64	M20×1	16	11	15	27	5	6	8	22	10	WBK20-01	WBK20-11
28	20	64	M20×1	16	11	15	27	5	6	8	22	10	WBK20-01	WBK20-11
32	25	76	M25×1.5	20	14	20	33	6	8	10	27	12	WBK25-01	WBK25-11
36	25	76	M25×1.5	20	14	20	33	6	8	10	27	12	WBK25-01	WBK25-11
40	30	89	M30×1.5	26	—	25	61	8	10	12	—	—	WBK30DF-31	
45	35	92	M35×1.5	30	—	30	63	8	12	14	—	—	WBK35DF-31	
50	35	92	M35×1.5	30	—	30	63	8	12	14	—	—	WBK35DF-31	

Note : The dimension d_1 shall be smaller enough than the minor diameter of the ball screw thread to provide sufficient shoulder surface for the spacer.
Refer to "B-II-14 Precautions for Designing Ball Screw (B538 page)".

Table I-4•16 Dimensions of rolled ball screw shaft ends (opposite to the drive side)

Unit: mm

Screw shaft diameter	Bearing journal		Retaining ring groove			Hexagonal hole		Support unit
	Outside diameter	Length	Width	Groove diameter	Groove position	Width across flats	Depth	Numbers in parentheses are bearing reference numbers.
d	d_3	L_3	n	dn	nL	B	h	
10	6	9	0.8	5.7	6.8	—	—	WBK08S-01(606)
12	8	10	0.9	7.6	7.9	—	—	WBK10S-01(608)
14	10	12	1.15	9.6	9.15	4	6	WBK12S-01(6000)
15	10	12	1.15	9.6	9.15	4	6	WBK12S-01(6000)
16	10	12	1.15	9.6	9.15	4	6	WBK12S-01(6000)
18	10	12	1.15	9.6	9.15	4	6	WBK12S-01(6000)
20	15	13	1.15	14.3	10.15	5	7	WBK15S-01(6002)
25	17	16	1.15	16.2	13.15	6	8	WBK17S-01(6203)
	20	19	1.35	19	15.35	6	8	WBK20S-01(6204)
28	20	19	1.35	19	15.35	6	8	WBK20S-01(6204)
32	25	20	1.35	23.9	16.35	8	10	WBK25S-01(6205)
36	25	20	1.35	23.9	16.35	8	10	WBK25S-01(6205)
40	30	22	1.75	28.6	17.75	10	12	(6206)
45	35	23	1.75	33	18.75	12	14	(6207)
50	35	23	1.75	33	18.75	12	14	(6207)

www.bergab.ru Берг АБ bergab@ya.ru Тел. (495)-228-06-21, факс (495) 223-3071

www.bergab.ru Берг АБ bergab@ya.ru Тел. (495)-228-06-21, факс (495) 223-3071

B-I-5 When Placing Orders

In order to avoid confusion, please use "reference number" or "specification number" when inquiring of NSK the factors of the desired ball screw specifications.

◇ **Reference number** : Alpha-numeric codes are assigned to each ball screw.

◇ **Specification number** : Specification factors are identified by alpha-numeric codes. Codes are for easy explanation of your requirements.
(If you do not use these numbers, please itemize your requirements.)

B-I-5.1 When Ordering Standard Series

Find the reference number from the dimension table. Enter the reference number in the "Order Form by Fax" (Page B34). Send the fax to a NSK agency (branch office, sales office, or your local representative.).

(1) Example of reference number of A/S Series ball screw

W 1 6 0 3 F A - 7 P G X - C 5 Z 3 2

- Product code (ball screw)
- Screw shaft diameter (mm)
- Effective threaded length (by the unit of 100 mm)
- A Series: MA, FA, SA, KA
  S Series: MS, FS, SS
- Design serial number
- Ball screw specification/appearance
- Accuracy grade
- Axial play
- Lead (mm)

(2) Example of reference number of V Series ball screw

V F A 1 5 1 0 C 7 S - 5 0 0

- V Series: VFA, RMA, RMS
- Screw shaft diameter (mm)
- Lead (mm)
- Accuracy grade
- Axial play
- Screw shaft length (mm)

(3) Example of reference number for a rolled ball screw

Nut assembly

R N F T L 2 5 1 0 A 5 S

- Product code (nut assembly)
- Nut model: FTL, FBL, STL, CT, FCL
- Screw shaft diameter (mm)
- Lead (mm)
- Internal design specification code
- Effective turns of balls(number of turns of balls x number of circuit)
- Seal code S: With seal
  No code: Without seal

Screw shaft

R S 2 5 1 0 A 2 0

- Product code (screw shaft)
- Screw shaft diameter (mm)
- Lead (mm)
- Internal design specification code
- Screw shaft length (x 100)

Please identify the nut assembly and screw shaft reference number when ordering.

B 32

www.bergab.ru Берг АБ bergab@ya.ru Тел. (495)-228-06-21, факс (495) 223-3071

www.bergab.ru Берг АБ bergab@ya.ru Тел. (495)-228-06-21, факс (495) 223-3071

B-I-5.2 When Ordering Custom Made Ball Screws

(1) Specification number

Use a specification number for inquiry prior to determining your specifications. A specification number reveals general information on the specification. This is useful for communication with NSK such as for obtaining a price estimate. If you desire to discuss with NSK technical points regarding specifications, use the NSK ball screw technical data sheet as an aid (Page B35).

An example of specification number

DFT5010-5LC3Z-850/1230

- Nut model
- Screw shaft diameter (mm)
- Lead (mm)
- Effective turns of balls (number of turns of balls x number of circuit)
- Direction of turn No code: Right L: Left
- Accuracy grade
- Axial play
- Threaded length (mm)
- Screw shaft length (mm)

(2) Reference number

After specifications are determined, a reference number such as below is assigned to each ball screw.
For detailed specifications, check the specification drawing, which NSK will issue for individual ball screw to confirm your requirements.
When placing order, please use this reference number.

An example of reference number

W5012-26LD-C1Z10

- Product code (Ball Screw)
- Screw shaft diameter (mm)
- Effective threaded length (by the unit of 100 mm)
- Design serial number
- Direction of turn No code: Right L: Left
- Ball screw specification/appearance
- Accuracy grade
- Axial play
- Lead (mm)

www.bergab.ru Берг АБ bergab@ya.ru Тел. (495)-228-06-21, факс (495) 223-3071

NSK

Fax Order Form

(Make copies for future orders)

(1) Standard series

Company name : _____ Date: Day Month Year

Address : _____ Telephone : _____

Name of person in charge : _____ Section : _____

Product name	Specification number	Quantity	Desired delivery date
Precision ball screw			
Rolled ball screw Nut			
Rolled ball screw Screw shaft			
Support unit			
Lock nut			
Grease pack			

Describe the shaft end configuration if processing is required (S Series, R Series). In this case, specify for what ball screw in the above list the shaft end shall be processed.
Refer to Page 27-30 for shaft end configuration. These pages also show reference number of support units.

Drive side

Opposite of drive side

B 34

www.bergab.ru Берг АБ bergab@ya.ru Тел. (495)-228-06-21, факс (495) 223-3071

NSK Ball Screw Technical Data Sheet (example)

(2) Custom made ball screw

Company name _____ Date: Day Month Year

Address _____ Telephone _____

Person in charge _____ Section _____

Machine which uses the ball screw *Machining center Model MC-* Application *Table left/right movement (X axis)*

Drawing/rough sketch attached? Yes (No)

Note: Either unit system can be used.

Use conditions

	Axial load	Rotational speed	Operating hours		
Maximum load	*9000* N	*20* min^{-1}	*15* %	Operating conditions	(Shaft rotation - Moving nut) (Normal operation) Shaft rotation - Moving shaft Back drive operation Nut rotation - Moving nut Nut rotation - Moving shaft Oscillation
Load in normal use	*4000* N	*360* min^{-1}	*60* %		
Minimum load	*2000* N	*1000* min^{-1}	*25* %		
				Degree of vibration shock	*Normal*
Maximum rotational speed	*1000* min^{-1}			Required life	*20000h*
Lubricant	Grease/oil (*Brand name: Alvania No. 2*)			Motor in use	*Company A, Model 1*
Seal	Yes No			Control system	*Company B, Model 2* (resolution: *1μm*)
Support bearing	Drive side *35TAC62DF*			Opposite to drive side *35TAC62DF*	
Guide way	(Rolling) Sliding (*LY451500HL2-P4Z3-II*)				
Environment	Temperature (Normal temperature in degrees Celsius) Dust Humidity Gas Liquid (where?) Clean room In vacuum				
Schedule for prototype	Day Month Year (approx.)			Quantity used	Piece
Date, going in production/Quantity	/Month /Year /Lot			per machine	

Specification factors of the ball screw

Screw shaft diameter	*50mm*	Direction of turn	*right*	Accuracy grade	*C2*	Screw shaft length	*880mm*	Preload	*3000N*
Lead	*10mm*	Effective turns of balls		Axial play	*0mm*	Overall shaft length	*1335mm*	Required torque	
Nut model	*DFT5010-5*		Flange type	*Circular I*	Nut orientation	Same as shown in the dimension table			Opposite

Supplemental explanation/requests

www.bergab.ru Берг АБ bergab@ya.ru Тел. (495)-228-06-21, факс (495) 223-3071

NSK

NSK Ball Screw Technical Data Sheet (example)

(2) Custom made ball screw

Company name _____ Date: Day Month Year

Address _____ Telephone _____

Person in charge _____ Section _____

Machine which uses the ball screw _____ Application _____

Drawing/rough sketch attached? Yes No

Note: Either unit system can be used.

Use conditions

	Axial load	Rotational speed	Operating hours		
Maximum load	N	min^{-1}	%	Operating conditions	Shaft rotation - Moving nut Normal operation Shaft rotation - Moving shaft Back drive operation Nut rotation - Moving nut Nut rotation - Moving shaft Oscillation
Load in normal use	N	min^{-1}	%		
Minimum load	N	min^{-1}	%		
				Degree of vibration shock	
Maximum rotational speed	min^{-1}			Required life	
Lubricant	Grease/oil ( )			Motor in use	
Seal	Yes No			Control system	( )
Support bearing	Drive side			Opposite to drive side	
Guide way	Rolling Sliding ( )				
Environment	Temperature (Normal temperature in degrees Celsius) Dust Humidity Gas Liquid (where?) Clean room In vacuum				
Schedule for prototype	Day Month Year (approx.)			Quantity used	Piece
Date, going in production/Quantity	/Month /Year /Lot			per machine	

Specification factors of the ball screw

Screw shaft diameter		Direction of turn		Accuracy grade		Screw shaft length		Preload	
Lead		Effective turns of balls		Axial play		Overall shaft length		Required torque	
Nut model			Flange type		Nut orientation	Same as shown in the dimension table			Opposite

Supplemental explanation/requests

www.bergab.ru Берг АБ bergab@ya.ru Тел. (495)-228-06-21, факс (495) 223-3071

A Series	B39
KA Series	B155
S Series	B181
V Series	B232
R Series (Rolled Ball Screws)	B255
Accessory	B273

B-Ⅰ-6 Dimension Table and Reference Number of Standard Stock Ball Screws

Ball Screws

www.bergab.ru Берг АБ bergab@ya.ru Тел. (495)-228-06-21, факс (495) 223-3071

www.bergab.ru Берг АБ bergab@ya.ru Тел. (495)-228-06-21, факс (495) 223-3071

B-I-6.1 A Series

◇Ball screw sizes are arranged in order of the page number.

Table begins with the smallest shaft diameter ball screw, and proceeds to the larger sizes. If ball screws have the same shaft diameter, those with smaller leads appear first. Page numbers of shaft diameter and lead combinations are shown in Table I-6•1.

◇Dimension tables

Dimension tables show shapes/sizes as well as specification factors of each shaft diameter/lead combination. Tables also contain data as follows:

●Stroke

Nominal stroke: A reference for your use.

Maximum stroke: The limit stroke that the nut can move. The figure is obtained by subtracting the nut length from the effective threaded length (L_1).

●Lead accuracy

Lead accuracy is C3 and C5 grades

T : Travel compensation;

e_p : Tolerance on specified travel;

υ_u : Travel variation

See "Technical Description: Lead accuracy" (Page B499) for the details of the codes.

●Permissible rotational speed

d • n: Limited by the relative peripheral speed between the screw shaft and the nut.

Critical speed: Limited by the natural frequency of a ball screw shaft. Critical speed depends on the supporting condition of screw shaft.

Use under either, but the smaller permissible rotational speed. For details, see "Technical description: Permissible rotational speed" (Page B509).

◇Other

Seal of the ball screw, ball recirculating deflector, and end cap are made of synthetic resin. Consult NSK when using our ball screws under extreme environment or in special environment, or if using special lubricant or oil.

For special environment, refer to Pages B527 and D2.

For lubricants, refer to Pages B525 and D13.

Table I-6-1 Combinations of screw shaft diameter and lead

Screw shaft diameter (mm) \ Lead (mm)	1	1.5	2	2.5	4	5	6	8	10	12	16	20	25	32	40	50
4	B41															
6	B43															
8	B45	B47	B49													
10			B51	B53	B55											
12			B57	B59		B61			B63							
14						B65		B67								
15									B69			B71				
16			B73	B75		B77					B79			B81		
20					B83	B85			B87			B89			B91	
25					B93	B95	B97		B99			B101	B103			B105
28						B107 B109	B111 B113									
32						B115 B117	B119 B121	B123	B125 B127				B129	B131		
36									B133 B135							
40						B137		B139	B141 B143	B145 B147						
45									B149							
50									B151 B153							

www.bergab.ru Берг АБ bergab@ya.ru Тел. (495)-228-06-21, факс (495) 223-3071

www.bergab.ru Берг АБ bergab@ya.ru Тел. (495)-228-06-21, факс (495) 223-3071

φ4×1

Standard stock

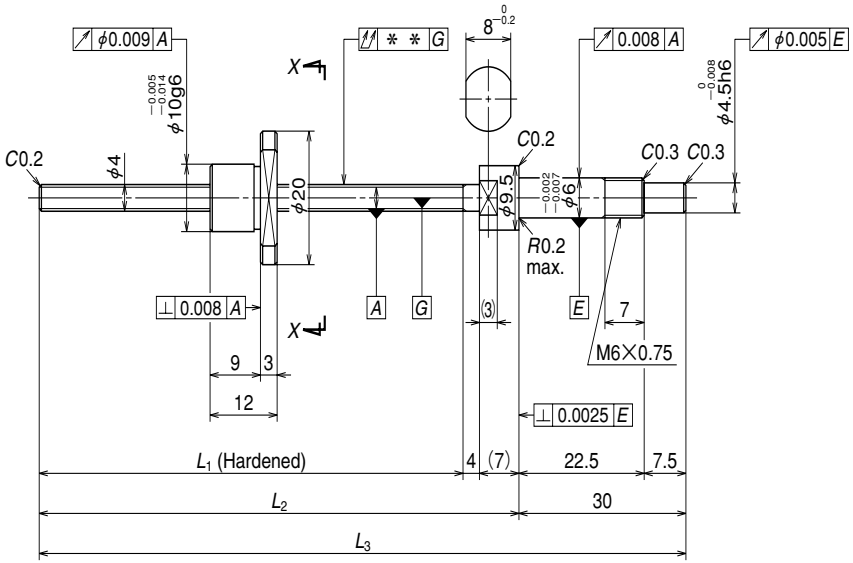

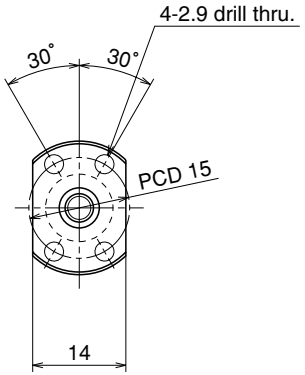

View X-X

Unit: mm

Ball screw specifications			
Product classification		Preloaded	Precise clearance
Shaft dia. × Lead / Direction of turn		4×1 / Right	
Preload / Ball recirculation		P preload / Deflector	
Ball dia. / Ball circle dia.		0.800 / 4.2	
Effective turns of balls		1×2	
Accuracy grade / Preload / Axial play		C3 / Z	C3 / T
Basic load rating (N)	Dynamic C_a	315	
	Static C_{0a}	370	
Axial play		0	0.005 or less
Dynamic friction torque, (N·cm)		~1.0	~0.3
Spacer ball		None	
Factory packed grease		NSK grease PS2	

B 42

Unit: mm

Ball screw No.		Stroke		Screw shaft length			Lead accuracy			Shaft run-out **	Mass (Kg)	Permissible rotational speed N (min⁻¹) Supporting condition
Preloaded (MPFD)	Precise clearance (MSFD)	Nominal	Maximum (L_1–Nut length)	L_1	L_2	L_3	T	e_p	υ_u			Fixed - Free
W0400MA-1PY-C3Z1	**W0400MA-2Y-C3T1**	20	32	44	55	85	0	0.008	0.008	0.015	0.024	3000
W0400MA-3PY-C3Z1	**W0400MA-4Y-C3T1**	40	52	64	75	105	0	0.008	0.008	0.020	0.026	3000
W0401MA-1PY-C3Z1	**W0401MA-2Y-C3T1**	70	82	94	105	135	0	0.008	0.008	0.025	0.028	3000

Remarks: 1. We recommend NSK support unit WBK06-01A (square type, fixed side) or WBK06-11 (round type, fixed side).
2. NSK grease PS2 is recommended. Apply to the screw shaft surface when replenishing.
3. Nut does not have a seal.
4. Permissible rotational speed is determined by a d · n value and a critical speed. See page B509.
Root diameter of screw shaft (dr) is 3.2 mm.

www.bergab.ru Берг АБ bergab@ya.ru Тел. (495)-228-06-21, факс (495) 223-3071

www.bergab.ru Берг АБ bergab@ya.ru Тел. (495)-228-06-21, факс (495) 223-3071

φ6×1

Standard stock

Unit: mm

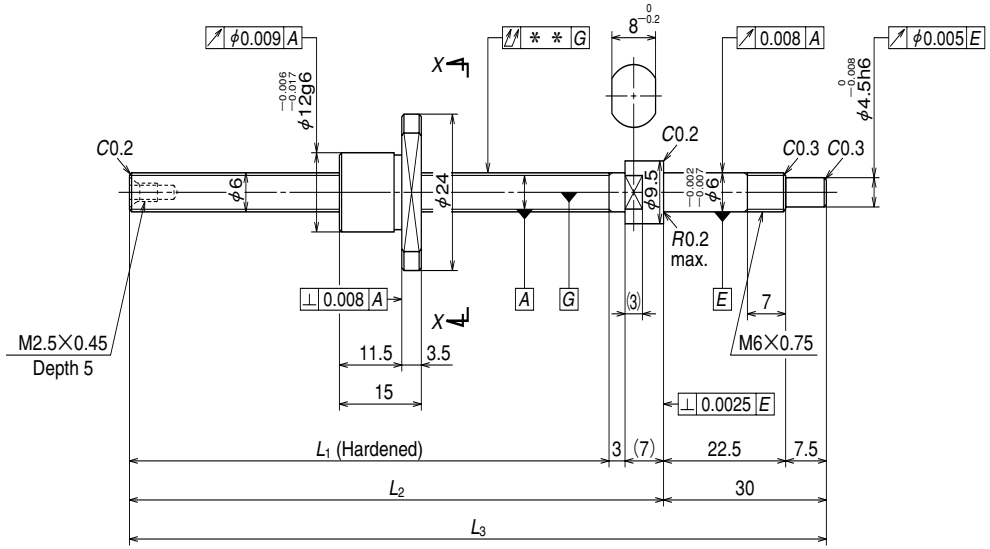

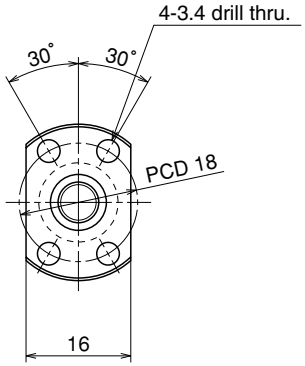

View *X-X*

Ball screw specifications			
Product classification		Preloaded	Precise clearance
Shaft dia. × Lead / Direction of turn		6×1/Right	
Preload / Ball recirculation		P preload / Deflector	
Ball dia. / Ball circle dia.		0.800/6.2	
Effective turns of balls		1×3	
Accuracy grade / Preload / Axial play		C3/Z	C3/T
Basic load rating (N)	Dynamic C_a	575	
	Static C_{0a}	925	
Axial play		0	0.005 or less
Dynamic friction torque, (N·cm)		~1.3	~0.3
Spacer ball		None	
Factory packed grease		NSK grease PS2	

B 44

Unit: mm

Ball screw No.		Stroke		Screw shaft length			Lead accuracy			Shaft run-out **	Mass (Kg)	Permissible rotational speed N (min⁻¹) Supporting condition
Preloaded (MPFD)	Precise clearance (MSFD)	Nominal	Maximum (L_1–Nut length)	L_1	L_2	L_3	T	e_p	υ_u			Fixed - Free
W0600MA-1PY-C3Z1	**W0600MA-2Y-C3T1**	40	50	65	75	105	0	0.008	0.008	0.015	0.039	3000
W0601MA-1PY-C3Z1	**W0601MA-2Y-C3T1**	70	80	95	105	135	0	0.008	0.008	0.020	0.045	3000
W0601MA-3PY-C3Z1	**W0601MA-4Y-C3T1**	100	110	125	135	165	0	0.010	0.008	0.025	0.051	3000

Remarks
1. We recommend NSK support unit WBK06-01A (square type, fixed side), and WBK06-11 (round type, fixed side).
2. NSK grease PS2 is recommended. Apply to the screw shaft surface when replenishing.
3. Nut does not have a seal.
4. Permissible rotational speed is determined by a d · n value and a critical speed. See page B509.
Root diameter of screw shaft (dr) is 5.2 mm.

www.bergab.ru Берг АБ bergab@ya.ru Тел. (495)-228-06-21, факс (495) 223-3071

www.bergab.ru Берг АБ bergab@ya.ru Тел. (495)-228-06-21, факс (495) 223-3071

φ8×1

Standard stock

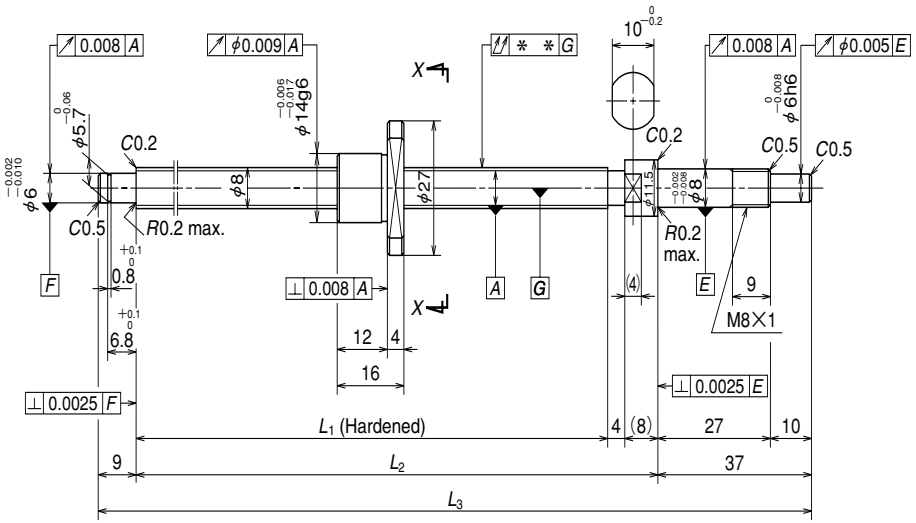

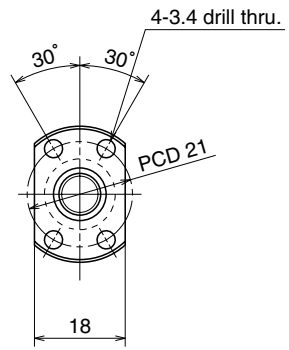

View X-X

Unit: mm

Ball screw specifications			
Product classification		Preloaded	Precise clearance
Shaft dia. × Lead / Direction of turn		8×1/Right	
Preload / Ball recirculation		P preload / Deflector	
Ball dia. / Ball circle dia.		0.800/8.2	
Effective turns of balls		1×3	
Accuracy grade / Preload / Axial play		C3/Z	C3/T
Basic load rating (N)	Dynamic C_a	670	
	Static C_{0a}	1290	
Axial play		0	0.005 or less
Dynamic friction torque, (N·cm)		~1.8	~0.5
Spacer ball		None	
Factory packed grease		NSK grease PS2	

B 46

Unit: mm

Ball screw No.		Stroke		Screw shaft length			Lead accuracy			Shaft run-out **	Mass (Kg)	Permissible rotational speed N (min⁻¹) Supporting condition
Preloaded (MPFD)	Precise clearance (MSFD)	Nominal	Maximum (L_1–Nut length)	L_1	L_2	L_3	T	e_p	υ_u			Fixed - Simple support
W0800MA-1PY-C3Z1	**W0800MA-2Y-C3T1**	40	64	80	92	138	0	0.008	0.008	0.025	0.073	3000
W0801MA-1PY-C3Z1	**W0801MA-2Y-C3T1**	70	94	110	122	168	0	0.010	0.008	0.030	0.084	3000
W0801MA-3PY-C3Z1	**W0801MA-4Y-C3T1**	100	124	140	152	198	0	0.010	0.008	0.030	0.095	3000
W0802MA-1PY-C3Z1	**W0802MA-2Y-C3T1**	150	174	190	202	248	0	0.010	0.008	0.035	0.11	3000

Remarks
1. We recommend NSK support unit WBK08-01A (square type, fixed side), WBK08S-01 (square type, simple support side), and WBK08-11 (round type, fixed side).
2. NSK grease PS2 is recommended. Apply to the screw shaft surface when replenishing.
3. Nut does not have a seal.
4. Permissible rotational speed is determined by a d · n value and a critical speed. See page B509. Root diameter of screw shaft (dr) is 7.2 mm.

www.bergab.ru Берг АБ bergab@ya.ru Тел. (495)-228-06-21, факс (495) 223-3071

www.bergab.ru Берг АБ bergab@ya.ru Тел. (495)-228-06-21, факс (495) 223-3071

φ8×1.5

Standard stock

Unit: mm

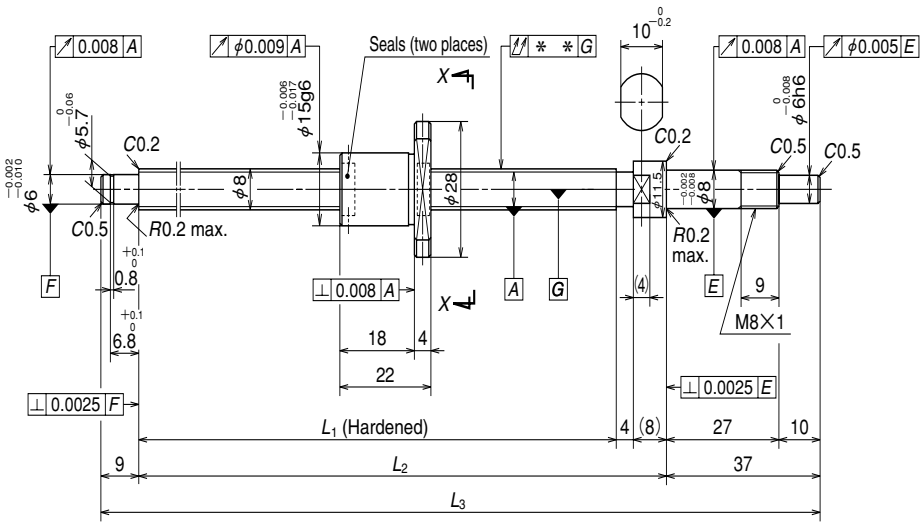

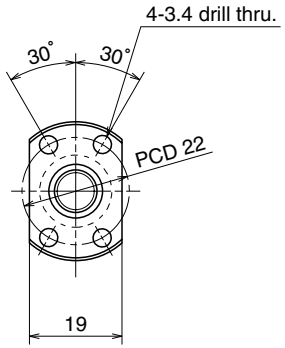

View X-X

Ball screw specifications			
Product classification		Preloaded	Precise clearance
Shaft dia. × Lead / Direction of turn		8×1.5/Right	
Preload / Ball recirculation		P preload / Deflector	
Ball dia. / Ball circle dia.		1.000/8.3	
Effective turns of balls		1×3	
Accuracy grade / Preload / Axial play		C3/Z	C3/T
Basic load rating (N)	Dynamic C_a	1080	
	Static C_{0a}	1980	
Axial play		0	0.005 or less
Dynamic friction torque, (N·cm)		~2.0	~0.5
Spacer ball		None	
Factory packed grease		NSK grease PS2	

B 48

Unit: mm

Ball screw No.		Stroke		Screw shaft length			Lead accuracy			Shaft run-out **	Mass (Kg)	Permissible rotational speed N (min⁻¹) Supporting condition
Preloaded (MPFD)	Precise clearance (MSFD)	Nominal	Maximum (L_1–Nut length)	L_1	L_2	L_3	T	e_p	υ_u			Fixed - Simple support
W0800MA-3PY-C3Z1.5	**W0800MA-4Y-C3T1.5**	40	58	80	92	138	0	0.008	0.008	0.025	0.082	3000
W0801MA-5PY-C3Z1.5	**W0801MA-6Y-C3T1.5**	70	88	110	122	168	0	0.010	0.008	0.030	0.093	3000
W0801MA-7PY-C3Z1.5	**W0801MA-8Y-C3T1.5**	100	118	140	152	198	0	0.010	0.008	0.030	0.10	3000
W0802MA-3PY-C3Z1.5	**W0802MA-4Y-C3T1.5**	150	168	190	202	248	0	0.010	0.008	0.035	0.12	3000

Remarks
1. We recommend NSK support unit WBK08-01A (square type, fixed side), WBK08S-01 (square type, simple support side), and WBK08-11 (round type, fixed side).
2. NSK grease PS2 is recommended. Apply to the screw shaft surface when replenishing.
3. Permissible rotational speed is determined by a d · n value and a critical speed. See page B509. Root diameter of screw shaft (dr) is 7.0 mm.

www.bergab.ru Берг АБ bergab@ya.ru Тел. (495)-228-06-21, факс (495) 223-3071

www.bergab.ru Берг АБ bergab@ya.ru Тел. (495)-228-06-21, факс (495) 223-3071

φ8×2

Standard stock

Unit: mm

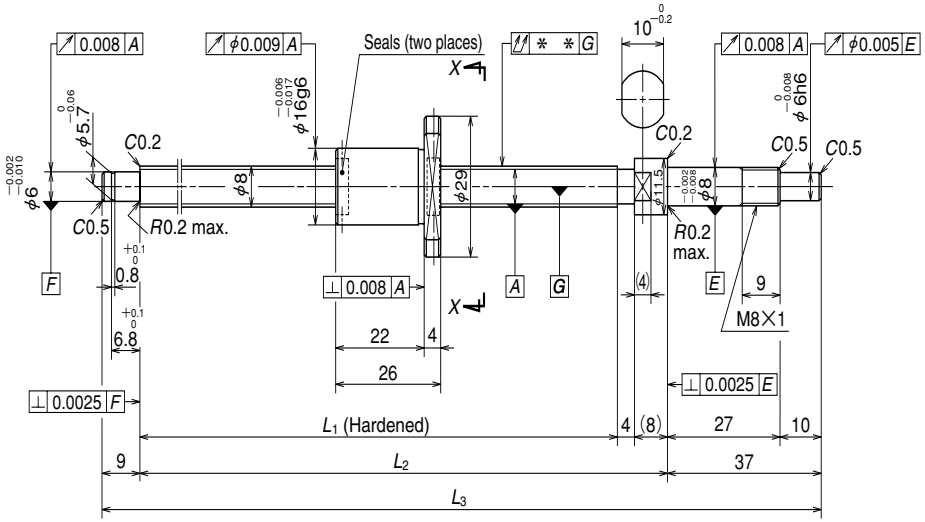

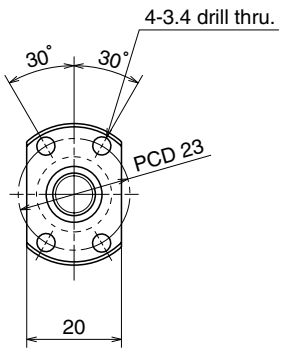

View X-X

Ball screw specifications			
Product classification		Preloaded	Precise clearance
Shaft dia. × Lead / Direction of turn		8×2/Right	
Preload / Ball recirculation		P preload / Deflector	
Ball dia. / Ball circle dia.		1.200/8.3	
Effective turns of balls		1×3	
Accuracy grade / Preload / Axial play		C3/Z	C3/T
Basic load rating (N)	Dynamic C_a	1320	
	Static C_{0a}	2210	
Axial play		0	0.005 or less
Dynamic friction torque, (N·cm)		~2.0	~0.5
Spacer ball		None	
Factory packed grease		NSK grease PS2	

B 50

Unit: mm

Ball screw No.		Stroke		Screw shaft length			Lead accuracy			Shaft run-out **	Mass (Kg)	Permissible rotational speed N (min⁻¹) Supporting condition
Preloaded (MPFD)	Precise clearance (MSFD)	Nominal	Maximum (L_1–Nut length)	L_1	L_2	L_3	T	e_p	υ_u			Fixed - Simple support
W0800MA-5PY-C3Z2	**W0800MA-6Y-C3T2**	40	54	80	92	138	0	0.008	0.008	0.025	0.09	3000
W0801MA-9PY-C3Z2	**W0801MA-10Y-C3T2**	70	84	110	122	168	0	0.010	0.008	0.030	0.10	3000
W0801MA-11PY-C3Z2	**W0801MA-12Y-C3T2**	100	114	140	152	198	0	0.010	0.008	0.030	0.11	3000
W0802MA-5PY-C3Z2	**W0802MA-6Y-C3T2**	150	164	190	202	248	0	0.010	0.008	0.035	0.13	3000

Remarks
1. We recommend NSK support unit WBK08-01A (square type, fixed side), WBK08S-01 (square type, simple support side), and WBK08-11 (round type, fixed side).
2. NSK grease PS2 is recommended. Apply to the screw shaft surface when replenishing.
3. Permissible rotational speed is determined by a d · n value and a critical speed. See page B509.
Root diameter of screw shaft (dr) is 6.9 mm.

www.bergab.ru Берг АБ bergab@ya.ru Тел. (495)-228-06-21, факс (495) 223-3071

www.bergab.ru Берг АБ bergab@ya.ru Тел. (495)-228-06-21, факс (495) 223-3071

φ10×2

Standard stock

Unit: mm

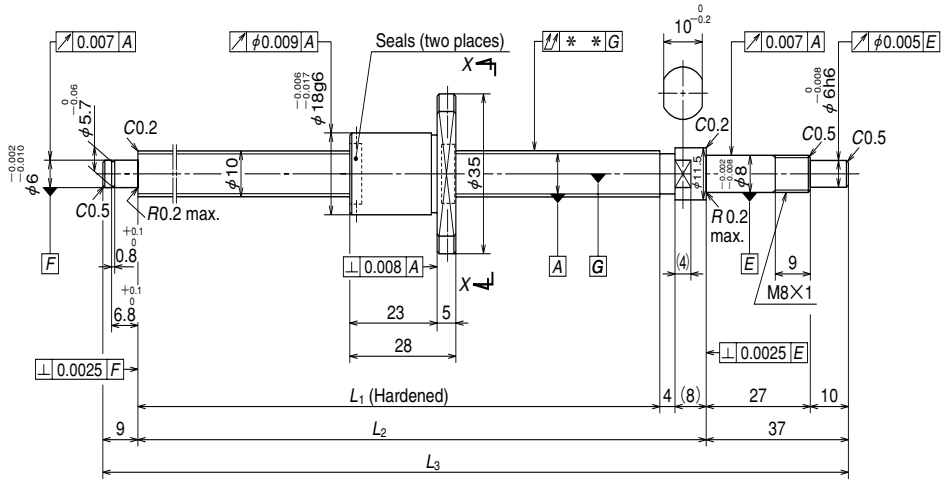

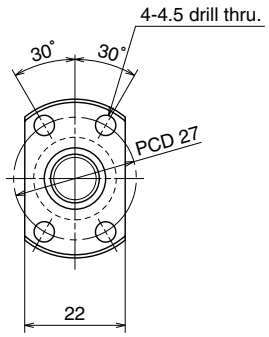

View X-X

Ball screw specifications			
Product classification		Preloaded	Precise clearance
Shaft dia. × Lead / Direction of turn		10×2/Right	
Preload / Ball recirculation		P preload / Deflector	
Ball dia. / Ball circle dia.		1.200/10.3	
Effective turns of balls		1×3	
Accuracy grade / Preload / Axial play		C3/Z	C3/T
Basic load rating (N)	Dynamic C_a	1490	
	Static C_{0a}	2850	
Axial play		0	0.005 or less
Dynamic friction torque, (N·cm)		0.1～2.4	～0.5
Spacer ball		None	
Factory packed grease		NSK grease PS2	

B 52

Unit: mm

Ball screw No.		Stroke		Screw shaft length			Lead accuracy			Shaft run-out **	Mass (Kg)	Permissible rotational speed N (min⁻¹) Supporting condition
Preloaded (MPFD)	Precise clearance (MSFD)	Nominal	Maximum (L_1–Nut length)	L_1	L_2	L_3	T	e_p	υ_u			Fixed - Simple support
W1001MA-1PY-C3Z2	**W1001MA-2Y-C3T2**	50	72	100	112	158	0	0.008	0.008	0.020	0.13	3000
W1001MA-3PY-C3Z2	**W1001MA-4Y-C3T2**	100	122	150	162	208	0	0.010	0.008	0.030	0.16	3000
W1002MA-1PY-C3Z2	**W1002MA-2Y-C3T2**	150	172	200	212	258	0	0.010	0.008	0.030	0.19	3000
W1002MA-3PY-C3Z2	**W1002MA-4Y-C3T2**	200	222	250	262	308	0	0.012	0.008	0.030	0.22	3000

Remarks
1. We recommend NSK support unit WBK08-01A (square type, fixed side), WBK08S-01 (square type, simple support side), and WBK08-11 (round type, fixed side).
2. NSK grease PS2 is recommended. Apply to the screw shaft surface when replenishing.
3. Permissible rotational speed is determined by a d · n value and a critical speed. See page B509. Root diameter of screw shaft (dr) is 8.9 mm.

www.bergab.ru Берг АБ bergab@ya.ru Тел. (495)-228-06-21, факс (495) 223-3071

www.bergab.ru Берг АБ bergab@ya.ru Тел. (495)-228-06-21, факс (495) 223-3071

φ10×2.5

Standard stock

Unit: mm

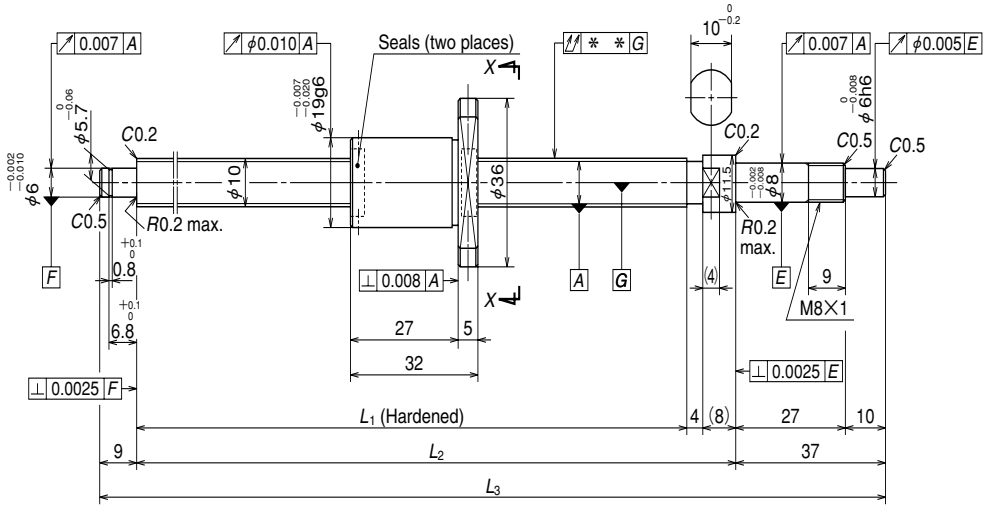

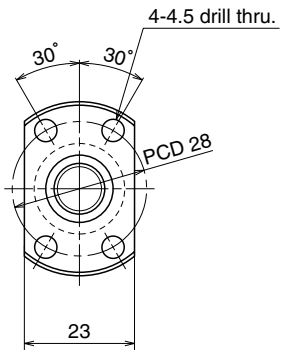

View X-X

Ball screw specifications			
Product classification		Preloaded	Precise clearance
Shaft dia. × Lead / Direction of turn		10×2.5/Right	
Preload / Ball recirculation		P preload / Deflector	
Ball dia. / Ball circle dia.		1.588/10.4	
Effective turns of balls		1×3	
Accuracy grade / Preload / Axial play		C3/Z	C3/T
Basic load rating (N)	Dynamic C_a	2130	
	Static C_{0a}	3640	
Axial play		0	0.005 or less
Dynamic friction torque, (N·cm)		0.2～2.9	～0.5
Spacer ball		None	
Factory packed grease		NSK grease PS2	

Unit: mm

Ball screw No.		Stroke		Screw shaft length			Lead accuracy			Shaft run-out **	Mass (Kg)	Permissible rotational speed N (min⁻¹) Supporting condition
Preloaded (MPFD)	Precise clearance (MSFD)	Nominal	Maximum (L_1–Nut length)	L_1	L_2	L_3	T	e_p	υ_u			Fixed - Simple support
W1001MA-5PY-C3Z2.5	**W1001MA-6Y-C3T2.5**	50	68	100	112	158	0	0.008	0.008	0.020	0.14	3000
W1001MA-7PY-C3Z2.5	**W1001MA-8Y-C3T2.5**	100	118	150	162	208	0	0.010	0.008	0.030	0.17	3000
W1002MA-5PY-C3Z2.5	**W1002MA-6Y-C3T2.5**	150	168	200	212	258	0	0.010	0.008	0.030	0.20	3000
W1002MA-7PY-C3Z2.5	**W1002MA-8Y-C3T2.5**	200	218	250	262	308	0	0.012	0.008	0.030	0.23	3000

Remarks
1. We recommend NSK support unit WBK08-01A (square type, fixed side), WBK08S-01 (square type, simple support side), and WBK08-11 (round type, fixed side).
2. NSK grease PS2 is recommended. Apply to the screw shaft surface when replenishing.
3. Permissible rotational speed is determined by a d · n value and a critical speed. See page B509. Root diameter of screw shaft (dr) is 8.6 mm.

www.bergab.ru Берг АБ bergab@ya.ru Тел. (495)-228-06-21, факс (495) 223-3071

www.bergab.ru Берг АБ bergab@ya.ru Тел. (495)-228-06-21, факс (495) 223-3071

φ10×4

Standard stock

Unit: mm

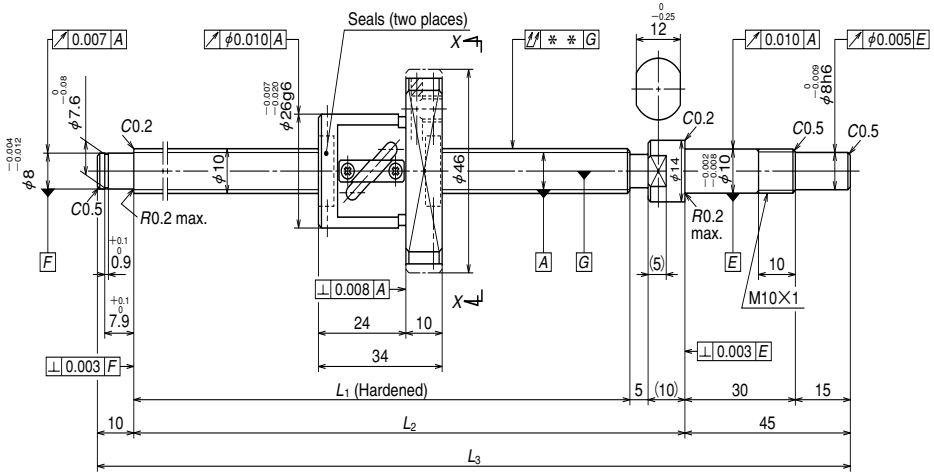

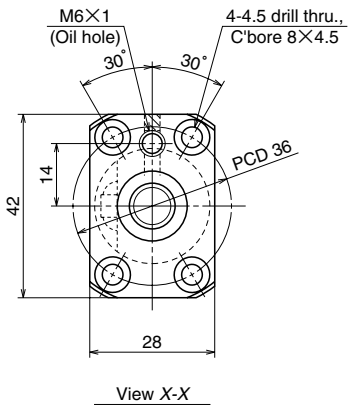

Ball screw specifications			
Product classification		Preloaded	Precise clearance
Shaft dia. × Lead / Direction of turn		10×4/Right	
Preload / Ball recirculation		P preload / Return tube	
Ball dia. / Ball circle dia.		2.000/10.3	
Effective turns of balls		2.5×1	
Accuracy grade / Preload / Axial play		C3/Z	C3/T
Basic load rating (N)	Dynamic C_a	1730	2740
	Static C_{0a}	2230	4450
Axial play		0	0.005 or less
Dynamic friction torque, (N·cm)		0.5~3.9	~1.0
Spacer ball		Yes	None
Factory packed grease		NSK grease PS2	
Internal spatial volume of nut (cm³)		0.8	

B 56

Unit: mm

Ball screw No.		Stroke		Screw shaft length			Lead accuracy			Shaft run-out **	Mass (Kg)	Permissible rotational speed N (min⁻¹) Supporting condition
Preloaded (PFT)	Precise clearance (SFT)	Nominal	Maximum (L_1–Nut length)	L_1	L_2	L_3	T	e_p	υ_u			Fixed - Simple support
W1001FA-1P-C3Z4	**W1001FA-2-C3T4**	50	76	110	125	180	0	0.010	0.008	0.020	0.26	3000
W1001FA-3P-C3Z4	**W1001FA-4-C3T4**	100	126	160	175	230	0	0.010	0.008	0.030	0.28	3000
W1002FA-1P-C3Z4	**W1002FA-2-C3T4**	150	176	210	225	280	0	0.012	0.008	0.030	0.31	3000
W1002FA-3P-C3Z4	**W1002FA-4-C3T4**	200	226	260	275	330	0	0.012	0.008	0.040	0.34	3000
W1003FA-1P-C3Z4	**W1003FA-2-C3T4**	250	276	310	325	380	0	0.012	0.008	0.040	0.37	3000
W1003FA-3P-C3Z4	**W1003FA-4-C3T4**	300	326	360	375	430	0	0.013	0.010	0.050	0.39	3000

Remarks
1. We recommend NSK support unit WBK10-01A (square type, fixed side), WBK10S-01 (square type, simple support side), and WBK10-11 (round type, fixed side).
2. NSK grease PS2 is recommended. The amount for replenishing should be about 50% of nut internal space capacity.
3. Permissible rotational speed is determined by a d · n value and a critical speed. See page B509.
Root diameter of screw shaft (dr) is 8.2 mm.

www.bergab.ru Берг АБ bergab@ya.ru Тел. (495)-228-06-21, факс (495) 223-3071

www.bergab.ru Берг АБ bergab@ya.ru Тел. (495)-228-06-21, факс (495) 223-3071

φ12×2

Standard stock

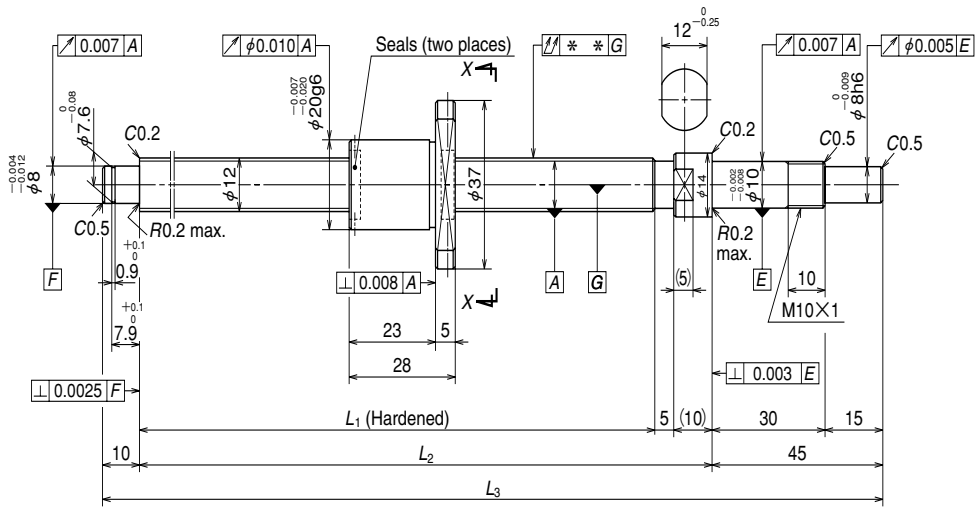

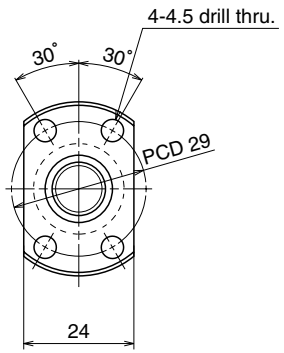

View X-X

Unit: mm

Ball screw specifications			
Product classification		Preloaded	Precise clearance
Shaft dia. × Lead / Direction of turn		12×2/Right	
Preload / Ball recirculation		P preload / Deflector	
Ball dia. / Ball circle dia.		1.200/12.3	
Effective turns of balls		1×3	
Accuracy grade / Preload / Axial play		C3/Z	C3/T
Basic load rating (N)	Dynamic C_a	1660	
	Static C_{0a}	3620	
Axial play		0	0.005 or less
Dynamic friction torque, (N·cm)		0.4~3.4	~1.0
Spacer ball		None	
Factory packed grease		NSK grease PS2	

B 58

Unit: mm

Ball screw No.		Stroke		Screw shaft length			Lead accuracy			Shaft run-out **	Mass (Kg)	Permissible rotational speed N (min⁻¹) Supporting condition
Preloaded (MPFD)	Precise clearance (MSFD)	Nominal	Maximum (L_1–Nut length)	L_1	L_2	L_3	T	e_p	υ_u			Fixed - Simple support
W1201MA-1PY-C3Z2	**W1201MA-2Y-C3T2**	50	82	110	125	180	0	0.010	0.008	0.020	0.20	3000
W1201MA-3PY-C3Z2	**W1201MA-4Y-C3T2**	100	132	160	175	230	0	0.010	0.008	0.030	0.24	3000
W1202MA-1PY-C3Z2	**W1202MA-2Y-C3T2**	150	182	210	225	280	0	0.012	0.008	0.030	0.28	3000
W1202MA-3PY-C3Z2	**W1202MA-4Y-C3T2**	200	232	260	275	330	0	0.012	0.008	0.040	0.32	3000
W1203MA-1PY-C3Z2	**W1203MA-2Y-C3T2**	250	282	310	325	380	0	0.012	0.008	0.040	0.36	3000

Remarks
1. We recommend NSK support unit WBK10-01A (square type, fixed side), WBK10S-01 (square type, simple support side), and WBK10-11 (round type, fixed side).
2. NSK grease PS2 is recommended. Apply to the screw shaft surface when replenishing.
3. Permissible rotational speed is determined by a d · n value and a critical speed. See page B509.
Root diameter of screw shaft (dr) is 10.9 mm.

www.bergab.ru Берг АБ bergab@ya.ru Тел. (495)-228-06-21, факс (495) 223-3071

www.bergab.ru Берг АБ bergab@ya.ru Тел. (495)-228-06-21, факс (495) 223-3071

φ12×2.5

Standard stock

Unit: mm

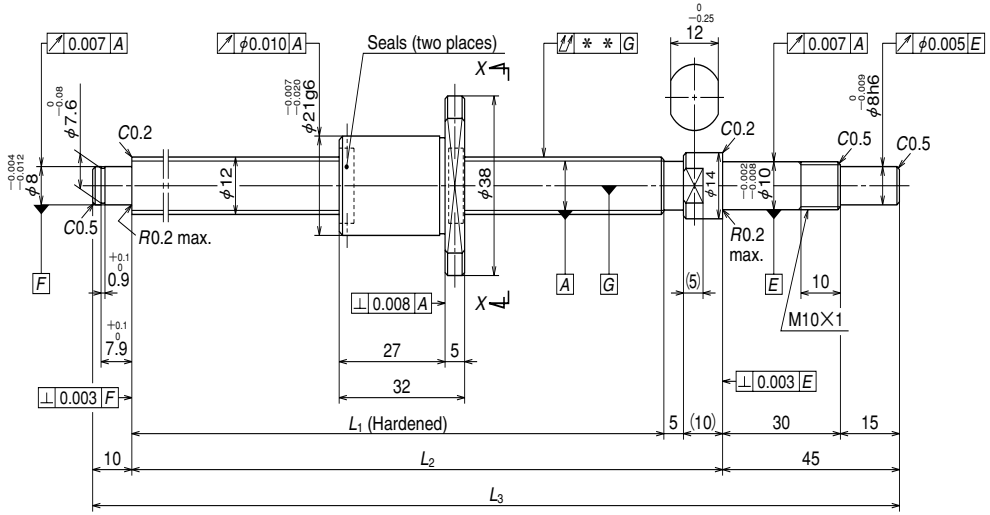

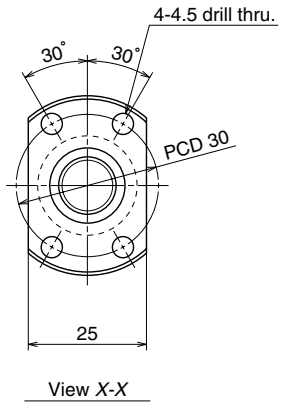

Ball screw specifications			
Product classification		Preloaded	Precise clearance
Shaft dia. × Lead / Direction of turn		12×2.5/Right	
Preload / Ball recirculation		P preload / Deflector	
Ball dia. / Ball circle dia.		1.588/12.4	
Effective turns of balls		1×3	
Accuracy grade / Preload / Axial play		C3/Z	C3/T
Basic load rating (N)	Dynamic C_a	2360	
	Static C_{0a}	4540	
Axial play		0	0.005 or less
Dynamic friction torque, (N·cm)		0.4~3.4	~1.0
Spacer ball		None	
Factory packed grease		NSK grease PS2	

B 60

Unit: mm

Ball screw No.		Stroke		Screw shaft length			Lead accuracy			Shaft run-out **	Mass (Kg)	Permissible rotational speed N (min⁻¹) Supporting condition
Preloaded (MPFD)	Precise clearance (MSFD)	Nominal	Maximum (L_1–Nut length)	L_1	L_2	L_3	T	e_p	υ_u			Fixed - Simple support
W1201MA-5PY-C3Z2.5	**W1201MA-6Y-C3T2.5**	50	78	110	125	180	0	0.010	0.008	0.020	0.21	3000
W1201MA-7PY-C3Z2.5	**W1201MA-8Y-C3T2.5**	100	128	160	175	230	0	0.010	0.008	0.030	0.25	3000
W1202MA-5PY-C3Z2.5	**W1202MA-6Y-C3T2.5**	150	178	210	225	280	0	0.012	0.008	0.030	0.29	3000
W1202MA-7PY-C3Z2.5	**W1202MA-8Y-C3T2.5**	200	228	260	275	330	0	0.012	0.008	0.040	0.33	3000
W1203MA-3PY-C3Z2.5	**W1203MA-4Y-C3T2.5**	250	278	310	325	380	0	0.012	0.008	0.040	0.37	3000

Remarks
1. We recommend NSK support unit WBK10-01A (square type, fixed side), WBK10S-01 (square type, simple support side), and WBK10-11 (round type, fixed side).
2. NSK grease PS2 is recommended. Apply to the screw shaft surface when replenishing.
3. Permissible rotational speed is determined by a d · n value and a critical speed. See page B509.
Root diameter of screw shaft (dr) is 10.6 mm.

www.bergab.ru Берг АБ bergab@ya.ru Тел. (495)-228-06-21, факс (495) 223-3071

www.bergab.ru Берг АБ bergab@ya.ru Тел. (495)-228-06-21, факс (495) 223-3071

φ12×5

Standard stock

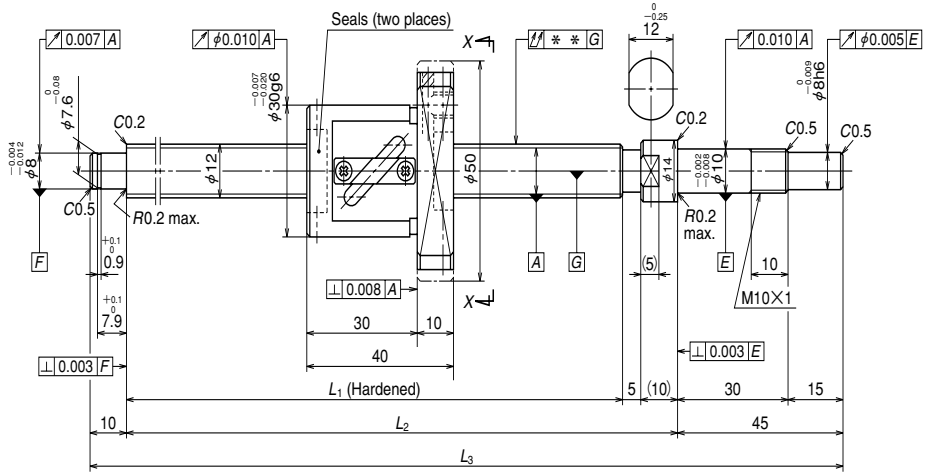

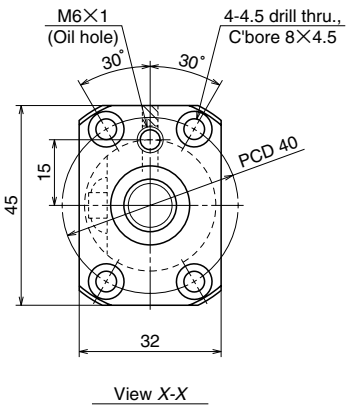

Unit: mm

Ball screw specifications			
Product classification		Preloaded	Precise clearance
Shaft dia. × Lead / Direction of turn		12×5/Right	
Preload / Ball recirculation		P preload / Return tube	
Ball dia. / Ball circle dia.		2.381/12.3	
Effective turns of balls		2.5×1	
Accuracy grade / Preload / Axial play		C3/Z	C3/T
Basic load rating (N)	Dynamic C_a	2370	3760
	Static C_{0a}	3160	6310
Axial play		0	0.005 or less
Dynamic friction torque, (N·cm)		1.0~4.4	~1.0
Spacer ball		Yes	None
Factory packed grease		NSK grease PS2	
Internal spatial volume of nut (cm³)		1.2	

B 62

Unit: mm

Ball screw No.		Stroke		Screw shaft length			Lead accuracy			Shaft run-out **	Mass (Kg)	Permissible rotational speed N (min⁻¹) Supporting condition
Preloaded (PFT)	Precise clearance (SFT)	Nominal	Maximum (L_1–Nut length)	L_1	L_2	L_3	T	e_p	υ_u			Fixed - Simple support
W1201FA-1P-C3Z5	**W1201FA-2-C3T5**	50	70	110	125	180	0	0.010	0.008	0.020	0.35	3000
W1201FA-3P-C3Z5	**W1201FA-4-C3T5**	100	120	160	175	230	0	0.010	0.008	0.030	0.38	3000
W1202FA-1P-C3Z5	**W1202FA-2-C3T5**	150	170	210	225	280	0	0.012	0.008	0.030	0.42	3000
W1202FA-3P-C3Z5	**W1202FA-4-C3T5**	200	220	260	275	330	0	0.012	0.008	0.040	0.46	3000
W1203FA-1P-C3Z5	**W1203FA-2-C3T5**	250	270	310	325	380	0	0.012	0.008	0.040	0.50	3000
W1204FA-1P-C3Z5	**W1204FA-2-C3T5**	350	370	410	425	480	0	0.015	0.010	0.050	0.58	3000
W1205FA-1P-C3Z5	**W1205FA-2-C3T5**	450	470	510	525	580	0	0.016	0.012	0.065	0.66	3000

Remarks
1. We recommend NSK support unit WBK10-01A (square type, fixed side), WBK10S-01 (square type, simple support side), and WBK10-11 (round type, fixed side).
2. NSK grease PS2 is recommended. The amount for replenishing should be about 50% of nut internal space capacity.
3. Permissible rotational speed is determined by a d · n value and a critical speed. See page B509.
Root diameter of screw shaft (dr) is 9.8 mm.

www.bergab.ru Берг АБ bergab@ya.ru Тел. (495)-228-06-21, факс (495) 223-3071

www.bergab.ru Берг АБ bergab@ya.ru Тел. (495)-228-06-21, факс (495) 223-3071

φ12×10

Standard stock

Unit: mm

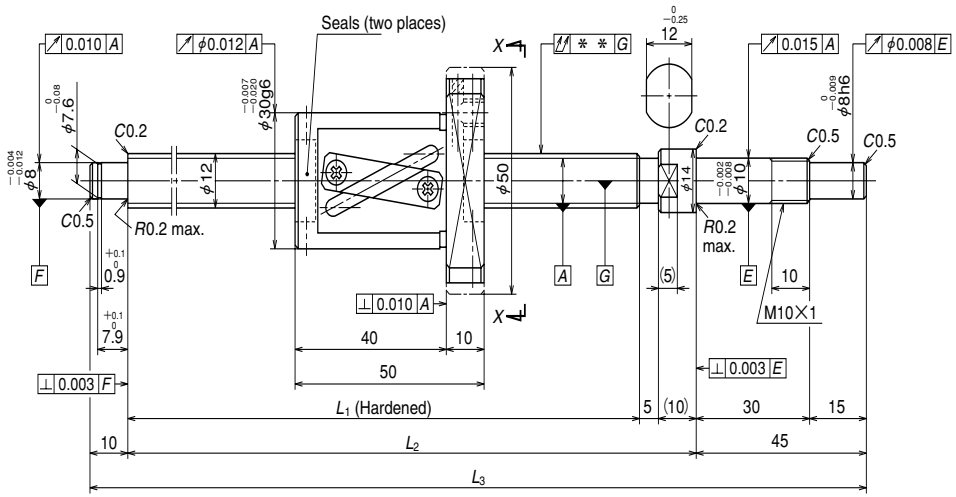

Ball screw specifications			
Product classification		Preloaded	Precise clearance
Shaft dia. × Lead / Direction of turn		12 × 10/Right	
Preload / Ball recirculation		P preload / Return tube	
Ball dia. / Ball circle dia.		2.381/12.5	
Effective turns of balls		2.5 × 1	
Accuracy grade / Preload / Axial play		C5/Z	C5/T
Basic load rating (N)	Dynamic C_a	2360	3750
	Static C_{0a}	3240	6480
Axial play		0	0.005 or less
Dynamic friction torque, (N · cm)		1.0～4.9	～1.5
Spacer ball		Yes	None
Factory packed grease		NSK grease LR3	
Internal spatial volume of nut (cm³)		1.4	

B 64

Unit: mm

Ball screw No.		Stroke		Screw shaft length			Lead accuracy			Shaft run-out **	Mass (Kg)	Permissible rotational speed N (min⁻¹) Supporting condition
Preloaded (LPFT)	Precise clearance (LSFT)	Nominal	Maximum (L_1–Nut length)	L_1	L_2	L_3	T	e_p	υ_u			Fixed - Simple support
W1201FA-5P-C5Z10	**W1201FA-6-C5T10**	100	110	160	175	230	0	0.020	0.018	0.035	0.43	3000
W1202FA-5P-C5Z10	**W1202FA-6-C5T10**	150	160	210	225	280	0	0.023	0.018	0.035	0.47	3000
W1203FA-3P-C5Z10	**W1203FA-4-C5T10**	250	260	310	325	380	0	0.023	0.018	0.050	0.56	3000
W1204FA-3P-C5Z10	**W1204FA-4-C5T10**	350	360	410	425	480	0	0.027	0.020	0.060	0.64	3000
W1205FA-3P-C5Z10	**W1205FA-4-C5T10**	450	460	510	525	580	0	0.030	0.023	0.075	0.72	3000

Remarks
1. We recommend NSK support unit WBK10-01A (square type, fixed side), WBK10S-01 (square type, simple support side), and WBK10-11 (round type, fixed side).
2. NSK grease LR3 is recommended. The amount for replenishing should be about 50% of nut internal space capacity.
3. Permissible rotational speed is determined by a d · n value and a critical speed. See page B509.
Root diameter of screw shaft (dr) is 10.0 mm.

www.bergab.ru Берг АБ bergab@ya.ru Тел. (495)-228-06-21, факс (495) 223-3071

www.bergab.ru Берг АБ bergab@ya.ru Тел. (495)-228-06-21, факс (495) 223-3071

φ14×5

Standard stock

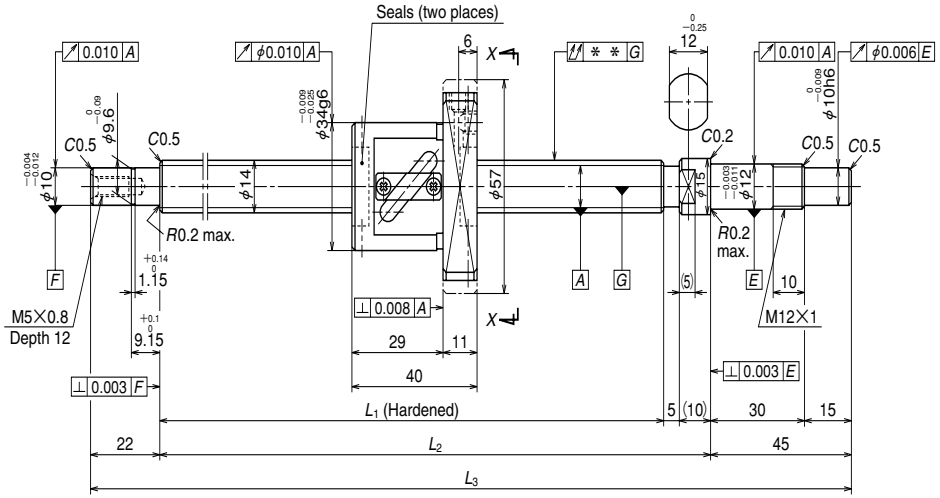

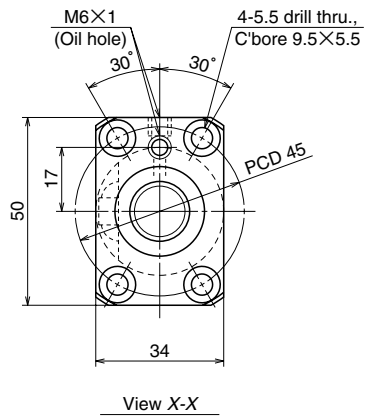

Unit: mm

Ball screw specifications			
Product classification		Preloaded	Precise clearance
Shaft dia. × Lead / Direction of turn		14×5/Right	
Preload / Ball recirculation		P preload / Return tube	
Ball dia. / Ball circle dia.		3.175/14.5	
Effective turns of balls		2.5×1	
Accuracy grade / Preload / Axial play		C3/Z	C3/T
Basic load rating (N)	Dynamic C_a	4280	6790
	Static C_{0a}	5840	11700
Axial play		0	0.005 or less
Dynamic friction torque, (N·cm)		1.5~6.9	~2.0
Spacer ball		Yes	None
Factory packed grease		NSK grease LR3	
Internal spatial volume of nut (cm³)		2.2	

B 66

Unit: mm

Ball screw No.		Stroke		Screw shaft length			Lead accuracy			Shaft run-out **	Mass (Kg)	Permissible rotational speed N (min⁻¹) Supporting condition	
Preloaded (PFT)	Precise clearance (SFT)	Nominal	Maximum (L_1–Nut length)	L_1	L_2	L_3	T	e_p	υ_u			Fixed - Simple support	Fixed - Fixed
W1401FA-1P-C3Z5	**W1401FA-2-C3T5**	100	149	189	204	271	0	0.010	0.008	0.020	0.52	3000	3000
W1402FA-1P-C3Z5	**W1402FA-2-C3T5**	150	199	239	254	321	0	0.012	0.008	0.030	0.57	3000	3000
W1403FA-1P-C3Z5	**W1403FA-2-C3T5**	250	299	339	354	421	0	0.013	0.010	0.035	0.67	3000	3000
W1404FA-1P-C3Z5	**W1404FA-2-C3T5**	350	399	439	454	521	0	0.015	0.010	0.045	0.77	3000	3000
W1405FA-1P-C3Z5	**W1405FA-2-C3T5**	450	499	539	554	621	0	0.016	0.012	0.045	0.87	3000	3000
W1406FA-1P-C3Z5	**W1406FA-2-C3T5**	600	649	689	704	771	0	0.018	0.013	0.055	1.0	3000	3000

Remarks
1. We recommend NSK support unit WBK12-01A (square type, fixed side), WBK12S-01 (square type, simple support side), and WBK12-11 (round type, fixed side).
2. NSK grease LR3 is recommended. The amount for replenishing should be about 50% of nut internal space capacity.
3. Permissible rotational speed is determined by a d · n value and a critical speed. See page B509.
Root diameter of screw shaft (dr) is 11.2 mm.

www.bergab.ru Берг АБ bergab@ya.ru Тел. (495)-228-06-21, факс (495) 223-3071

www.bergab.ru Берг АБ bergab@ya.ru Тел. (495)-228-06-21, факс (495) 223-3071

φ14×8

Standard stock

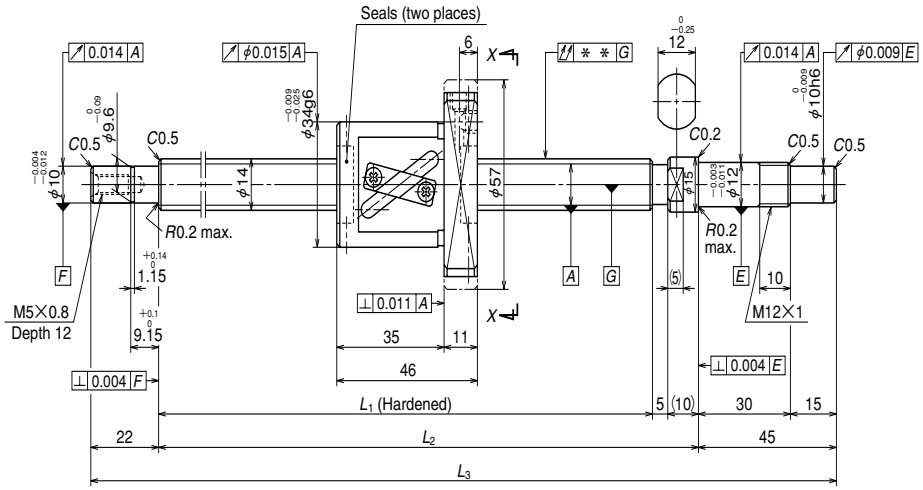

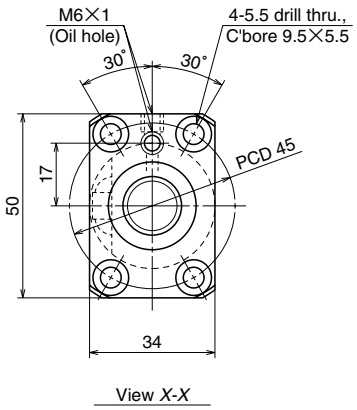

Unit: mm

Ball screw specifications			
Product classification		Preloaded	Precise clearance
Shaft dia. × Lead / Direction of turn		14×8/Right	
Preload / Ball recirculation		P preload / Return tube	
Ball dia. / Ball circle dia.		3.175/14.5	
Effective turns of balls		2.5×1	
Accuracy grade / Preload / Axial play		C5/Z	C5/T
Basic load rating (N)	Dynamic C_a	4280	6790
	Static C_{0a}	5840	11700
Axial play		0	0.005 or less
Dynamic friction torque, (N·cm)		1.5~7.8	~2.4
Spacer ball		Yes	None
Factory packed grease		NSK grease LR3	
Internal spatial volume of nut (cm³)		2.1	

B 68

Unit: mm

Ball screw No.		Stroke		Screw shaft length			Lead accuracy			Shaft run-out **	Mass (Kg)	Permissible rotational speed N (min⁻¹) Supporting condition	
Preloaded (LPFT)	Precise clearance (LSFT)	Nominal	Maximum (L_1–Nut length)	L_1	L_2	L_3	T	e_p	υ_u			Fixed - Simple support	Fixed - Fixed
W1401FA-3P-C5Z8	**W1401FA-4-C5T8**	100	143	189	204	271	0	0.020	0.018	0.025	0.56	3000	3000
W1402FA-3P-C5Z8	**W1402FA-4-C5T8**	150	193	239	254	321	0	0.023	0.018	0.035	0.61	3000	3000
W1402FA-5P-C5Z8	**W1402FA-6-C5T8**	200	243	289	304	371	0	0.023	0.018	0.035	0.67	3000	3000
W1403FA-3P-C5Z8	**W1403FA-4-C5T8**	250	293	339	354	421	0	0.025	0.020	0.040	0.72	3000	3000
W1403FA-5P-C5Z8	**W1403FA-6-C5T8**	300	343	389	404	471	0	0.025	0.020	0.040	0.78	3000	3000
W1404FA-3P-C5Z8	**W1404FA-4-C5T8**	350	393	439	454	521	0	0.027	0.020	0.050	0.83	3000	3000
W1404FA-5P-C5Z8	**W1404FA-6-C5T8**	400	443	489	504	571	0	0.027	0.020	0.050	0.88	3000	3000
W1405FA-3P-C5Z8	**W1405FA-4-C5T8**	450	493	539	554	621	0	0.030	0.023	0.050	0.94	3000	3000
W1405FA-5P-C5Z8	**W1405FA-6-C5T8**	500	543	589	604	671	0	0.030	0.023	0.065	0.99	3000	3000
W1406FA-3P-C5Z8	**W1406FA-4-C5T8**	550	593	639	654	721	0	0.035	0.025	0.065	1.0	3000	3000
W1406FA-5P-C5Z8	**W1406FA-6-C5T8**	600	643	689	704	771	0	0.035	0.025	0.065	1.1	3000	3000
W1407FA-1P-C5Z8	**W1407FA-2-C5T8**	700	743	789	804	871	0	0.035	0.025	0.085	1.2	2800	3000

Remarks
1. We recommend NSK support unit WBK12-01A (square type, fixed side), WBK12S-01 (square type, simple support side), and WBK12-11 (round type, fixed side).
2. NSK grease LR3 is recommended. The amount for replenishing should be about 50% of nut internal space capacity.
3. Permissible rotational speed is determined by a d · n value and a critical speed. See page B509.
Root diameter of screw shaft (dr) is 11.2 mm.

www.bergab.ru Берг АБ bergab@ya.ru Тел. (495)-228-06-21, факс (495) 223-3071

www.bergab.ru Берг АБ bergab@ya.ru Тел. (495)-228-06-21, факс (495) 223-3071

φ15×10

Standard stock

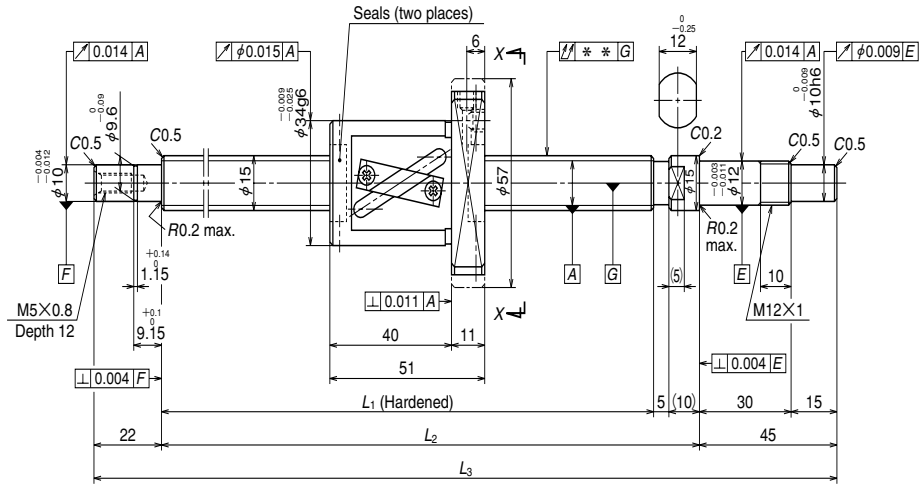

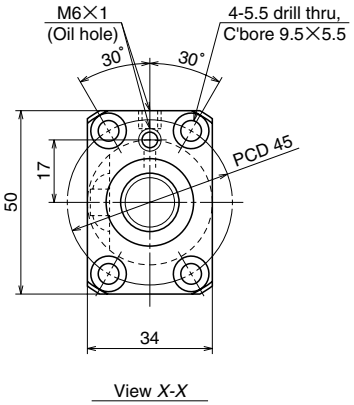

Unit: mm

Ball screw specifications			
Product classification		Preloaded	Precise clearance
Shaft dia. × Lead / Direction of turn		15×10/Right	
Preload / Ball recirculation		P preload / Return tube	
Ball dia. / Ball circle dia.		3.175/15.5	
Effective turns of balls		2.5×1	
Accuracy grade / Preload / Axial play		C5/Z	C5/T
Basic load rating (N)	Dynamic C_a	4450	7070
	Static C_{0a}	6380	12800
Axial play		0	0.005 or less
Dynamic friction torque, (N·cm)		1.5~7.8	~2.4
Spacer ball		Yes	None
Factory packed grease		NSK grease LR3	
Internal spatial volume of nut (cm³)		2.3	

B 70

Unit: mm

Ball screw No.		Stroke		Screw shaft length			Lead accuracy			Shaft run-out **	Mass (Kg)	Permissible rotational speed N (min⁻¹) Supporting condition	
Preloaded (LPFT)	Precise clearance (LSFT)	Nominal	Maximum (L_1–Nut length)	L_1	L_2	L_3	T	e_p	υ_u			Fixed - Simple support	Fixed - Fixed
W1501FA-1P-C5Z10	**W1501FA-2-C5T10**	100	138	189	204	271	0	0.020	0.018	0.025	0.61	3000	3000
W1502FA-1P-C5Z10	**W1502FA-2-C5T10**	150	188	239	254	321	0	0.023	0.018	0.035	0.67	3000	3000
W1502FA-3P-C5Z10	**W1502FA-4-C5T10**	200	238	289	304	371	0	0.023	0.018	0.035	0.74	3000	3000
W1503FA-1P-C5Z10	**W1503FA-2-C5T10**	250	288	339	354	421	0	0.025	0.020	0.040	0.80	3000	3000
W1503FA-3P-C5Z10	**W1503FA-4-C5T10**	300	338	389	404	471	0	0.025	0.020	0.040	0.86	3000	3000
W1504FA-1P-C5Z10	**W1504FA-2-C5T10**	350	388	439	454	521	0	0.027	0.020	0.050	0.93	3000	3000
W1504FA-3P-C5Z10	**W1504FA-4-C5T10**	400	438	489	504	571	0	0.027	0.020	0.050	1.0	3000	3000
W1505FA-1P-C5Z10	**W1505FA-2-C5T10**	450	488	539	554	621	0	0.030	0.023	0.050	1.1	3000	3000
W1505FA-3P-C5Z10	**W1505FA-4-C5T10**	500	538	589	604	671	0	0.030	0.023	0.065	1.1	3000	3000
W1506FA-1P-C5Z10	**W1506FA-2-C5T10**	550	588	639	654	721	0	0.035	0.025	0.065	1.2	3000	3000
W1506FA-3P-C5Z10	**W1506FA-4-C5T10**	600	638	689	704	771	0	0.035	0.025	0.065	1.2	3000	3000
W1507FA-1P-C5Z10	**W1507FA-2-C5T10**	700	738	789	804	871	0	0.035	0.025	0.085	1.4	3000	3000
W1508FA-1P-C5Z10	**W1508FA-2-C5T10**	800	838	889	904	971	0	0.040	0.027	0.085	1.5	2400	3000
W1510FA-1P-C5Z10	**W1510FA-2-C5T10**	1000	1038	1089	1104	1171	0	0.046	0.030	0.110	1.8	1590	2250

Remarks
1. We recommend NSK support unit WBK12-01A (square type, fixed side), WBK12S-01 (square type, simple support side), and WBK12-11 (round type, fixed side).
2. NSK grease LR3 is recommended. The amount for replenishing should be about 50% of nut internal space capacity.
3. Permissible rotational speed is determined by a d · n value and a critical speed. See page B509.
Root diameter of screw shaft (dr) is 12.2 mm.

www.bergab.ru Берг АБ bergab@ya.ru Тел. (495)-228-06-21, факс (495) 223-3071

www.bergab.ru Берг АБ bergab@ya.ru Тел. (495)-228-06-21, факс (495) 223-3071

φ15×20

Standard stock

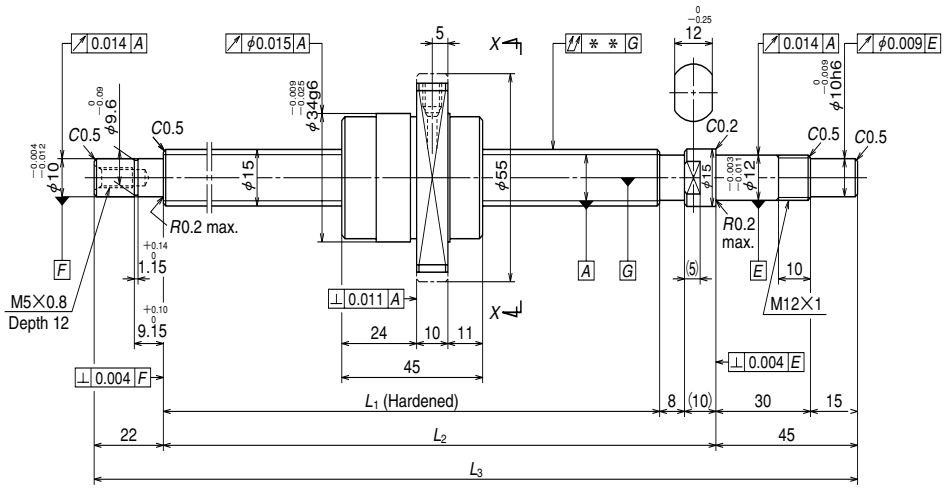

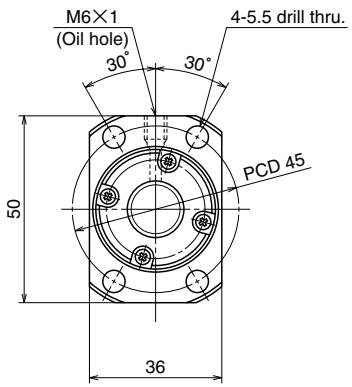

View X-X

Unit: mm

Ball screw specifications			
Product classification		Preloaded	Precise clearance
Shaft dia. × Lead / Direction of turn		15×20/Right	
Preload / Ball recirculation		P preload / End cap	
Ball dia. / Ball circle dia.		3.175/15.5	
Effective turns of balls		1.7×1	
Accuracy grade / Preload / Axial play		C5/Z	C5/T
Basic load rating (N)	Dynamic C_a	3870	5070
	Static C_{0a}	5820	8730
Axial play		0	0.005 or less
Dynamic friction torque, (N·cm)		1.5~7.8	~2.4
Spacer ball		Yes	None
Factory packed grease		NSK grease LR3	
Internal spatial volume of nut (cm³)		1.9	

Unit: mm

Ball screw No.		Stroke		Screw shaft length			Lead accuracy			Shaft run-out **	Mass (Kg)	Permissible rotational speed N (min⁻¹) Supporting condition	
Preloaded (UPFC)	Precise clearance (USFC)	Nominal	Maximum (L_1–Nut length)	L_1	L_2	L_3	T	e_p	υ_u			Fixed - Simple support	Fixed - Fixed
W1501FA-3PG-C5Z20	**W1501FA-4G-C5T20**	100	141	186	204	271	0	0.020	0.018	0.025	0.61	3000	3000
W1502FA-5PG-C5Z20	**W1502FA-6G-C5T20**	150	191	236	254	321	0	0.023	0.018	0.035	0.68	3000	3000
W1502FA-7PG-C5Z20	**W1502FA-8G-C5T20**	200	241	286	304	371	0	0.023	0.018	0.035	0.75	3000	3000
W1503FA-5PG-C5Z20	**W1503FA-6G-C5T20**	250	291	336	354	421	0	0.025	0.020	0.040	0.81	3000	3000
W1503FA-7PG-C5Z20	**W1503FA-8G-C5T20**	300	341	386	404	471	0	0.025	0.020	0.040	0.88	3000	3000
W1504FA-5PG-C5Z20	**W1504FA-6G-C5T20**	350	391	436	454	521	0	0.027	0.020	0.050	0.95	3000	3000
W1504FA-7PG-C5Z20	**W1504FA-8G-C5T20**	400	441	486	504	571	0	0.027	0.020	0.050	1.0	3000	3000
W1505FA-5PG-C5Z20	**W1505FA-6G-C5T20**	450	491	536	554	621	0	0.030	0.023	0.050	1.1	3000	3000
W1505FA-7PG-C5Z20	**W1505FA-8G-C5T20**	500	541	586	604	671	0	0.030	0.023	0.065	1.1	3000	3000
W1506FA-5PG-C5Z20	**W1506FA-6G-C5T20**	550	591	636	654	721	0	0.035	0.025	0.065	1.2	3000	3000
W1506FA-7PG-C5Z20	**W1506FA-8G-C5T20**	600	641	686	704	771	0	0.035	0.025	0.065	1.3	3000	3000
W1507FA-3PG-C5Z20	**W1507FA-4G-C5T20**	700	741	786	804	871	0	0.035	0.025	0.085	1.4	3000	3000
W1508FA-3PG-C5Z20	**W1508FA-4G-C5T20**	800	841	886	904	971	0	0.040	0.027	0.085	1.5	2400	3000
W1510FA-3PG-C5Z20	**W1510FA-4G-C5T20**	1000	1041	1086	1104	1171	0	0.046	0.030	0.110	1.8	1590	2240

Remarks
1. We recommend NSK support unit WBK12-01A (square type, fixed side), WBK12S-01 (square type, simple support side), and WBK12-11 (round type, fixed side).
2. NSK grease LR3 is recommended. The amount for replenishing should be about 50% of nut internal space capacity.
3. Permissible rotational speed is determined by a d · n value and a critical speed. See page B509.
Root diameter of screw shaft (dr) is 12.2 mm.

www.bergab.ru Берг АБ bergab@ya.ru Тел. (495)-228-06-21, факс (495) 223-3071

www.bergab.ru Берг АБ bergab@ya.ru Тел. (495)-228-06-21, факс (495) 223-3071

φ16×2

Standard stock

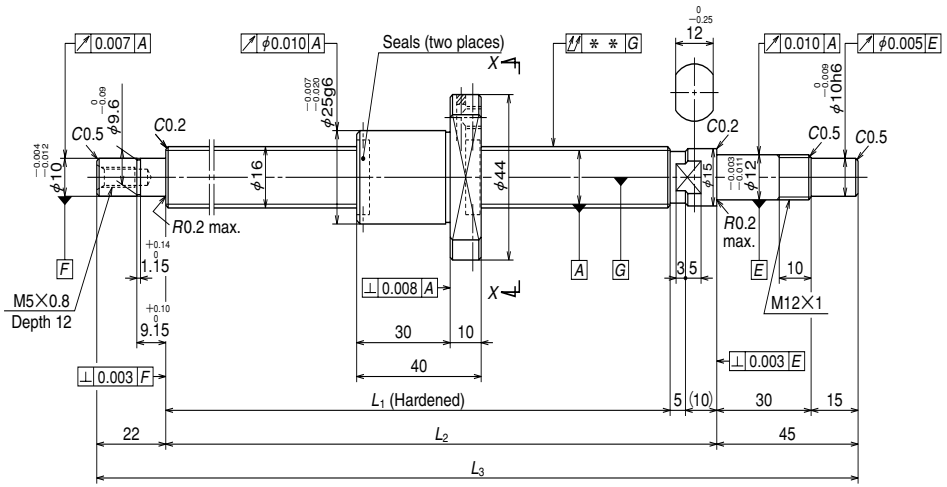

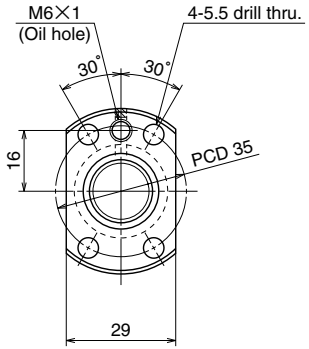

View X-X

Unit: mm

Ball screw specifications			
Product classification		Preloaded	Precise clearance
Shaft dia. × Lead / Direction of turn		16×2/Right	
Preload / Ball recirculation		P preload / Deflector	
Ball dia. / Ball circle dia.		1.588/16.4	
Effective turns of balls		1×4	
Accuracy grade / Preload / Axial play		C3/Z	C3/T
Basic load rating (N)	Dynamic C_a	3510	
	Static C_{0a}	8450	
Axial play		0	0.005 or less
Dynamic friction torque, (N·cm)		0.5～4.9	～1.5
Spacer ball		None	
Factory packed grease		NSK grease PS2	
Internal spatial volume of nut (cm³)		1.6	

B 74

Unit: mm

Ball screw No.		Stroke		Screw shaft length			Lead accuracy			Shaft run-out **	Mass (Kg)	Permissible rotational speed N (min⁻¹) Supporting condition	
Preloaded (MPFD)	Precise clearance (MSFD)	Nominal	Maximum (L_1–Nut length)	L_1	L_2	L_3	T	e_p	υ_u			Fixed - Simple support	Fixed - Fixed
W1601MA-1PY-C3Z2	**W1601MA-2Y-C3T2**	50	99	139	154	221	0	0.010	0.008	0.020	0.41	3000	3000
W1601MA-3PY-C3Z2	**W1601MA-4Y-C3T2**	100	149	189	204	271	0	0.010	0.008	0.020	0.48	3000	3000
W1602MA-1PY-C3Z2	**W1602MA-2Y-C3T2**	150	199	239	254	321	0	0.012	0.008	0.030	0.55	3000	3000
W1602MA-3PY-C3Z2	**W1602MA-4Y-C3T2**	200	249	289	304	371	0	0.012	0.008	0.030	0.62	3000	3000
W1603MA-1PY-C3Z2	**W1603MA-2Y-C3T2**	300	349	389	404	471	0	0.013	0.010	0.035	0.77	3000	3000

Remarks
1. We recommend NSK support unit WBK12-01A (square type, fixed side), WBK12S-01 (square type, simple support side), and WBK12-11(round type, fixed side).
2. NSK grease PS2 is recommended. The amount for replenishing should be about 50% of the nut internal space capacity.
3. Permissible rotational speed is determined by a d · n value and a critical speed. See page B509. Root diameter of screw shaft (dr) is 14.6 mm.

www.bergab.ru Берг АБ bergab@ya.ru Тел. (495)-228-06-21, факс (495) 223-3071

www.bergab.ru Берг АБ bergab@ya.ru Тел. (495)-228-06-21, факс (495) 223-3071

φ16×2.5

Standard stock

Unit: mm

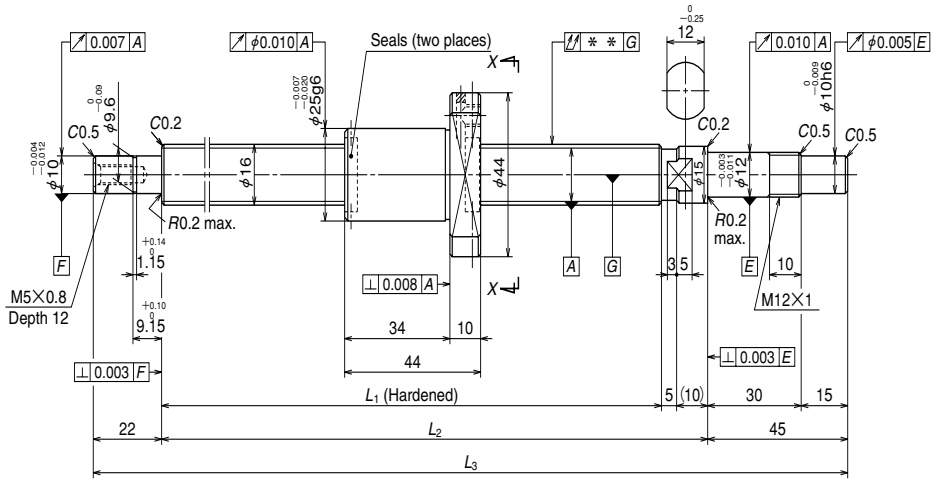

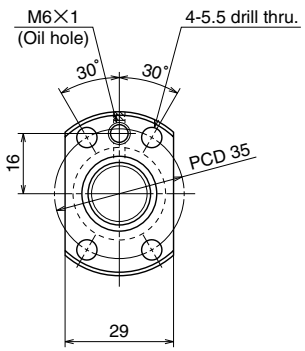

View X-X

Ball screw specifications			
Product classification		Preloaded	Precise clearance
Shaft dia. × Lead / Direction of turn		16×2.5/Right	
Preload / Ball recirculation		P preload / Deflector	
Ball dia. / Ball circle dia.		1.588/16.4	
Effective turns of balls		1×4	
Accuracy grade / Preload / Axial play		C3/Z	C3/T
Basic load rating (N)	Dynamic C_a	3510	
	Static C_{0a}	8450	
Axial play		0	0.005 or less
Dynamic friction torque, (N·cm)		0.5～4.9	～1.5
Spacer ball		None	
Factory packed grease		NSK grease PS2	
Internal spatial volume of nut (cm³)		1.6	

B 76

Unit: mm

Ball screw No.		Stroke		Screw shaft length			Lead accuracy			Shaft run-out **	Mass (Kg)	Permissible rotational speed N (min⁻¹) Supporting condition	
Preloaded (MPFD)	Precise clearance (MSFD)	Nominal	Maximum (L_1–Nut length)	L_1	L_2	L_3	T	e_p	υ_u			Fixed - Simple support	Fixed - Fixed
W1601MA-5PY-C3Z2.5	**W1601MA-6Y-C3T2.5**	50	95	139	154	221	0	0.010	0.008	0.020	0.42	3000	3000
W1601MA-7PY-C3Z2.5	**W1601MA-8Y-C3T2.5**	100	145	189	204	271	0	0.010	0.008	0.020	0.49	3000	3000
W1602MA-5PY-C3Z2.5	**W1602MA-6Y-C3T2.5**	150	195	239	254	321	0	0.012	0.008	0.030	0.57	3000	3000
W1602MA-7PY-C3Z2.5	**W1602MA-8Y-C3T2.5**	200	245	289	304	371	0	0.012	0.008	0.030	0.64	3000	3000
W1603MA-3PY-C3Z2.5	**W1603MA-4Y-C3T2.5**	300	345	389	404	471	0	0.013	0.010	0.035	0.79	3000	3000

Remarks
1. We recommend NSK support unit WBK12-01A (square type, fixed side), WBK12S-01 (square type, simple support side), and WBK12-11(round type, fixed side).
2. NSK grease PS2 is recommended. The amount for replenishing should be about 50% of the nut internal space capacity.
3. Permissible rotational speed is determined by a d · n value and a critical speed. See page B509. Root diameter of screw shaft (dr) is 14.6 mm.

www.bergab.ru Берг АБ bergab@ya.ru Тел. (495)-228-06-21, факс (495) 223-3071

www.bergab.ru Берг АБ bergab@ya.ru Тел. (495)-228-06-21, факс (495) 223-3071

φ16×5

Standard stock

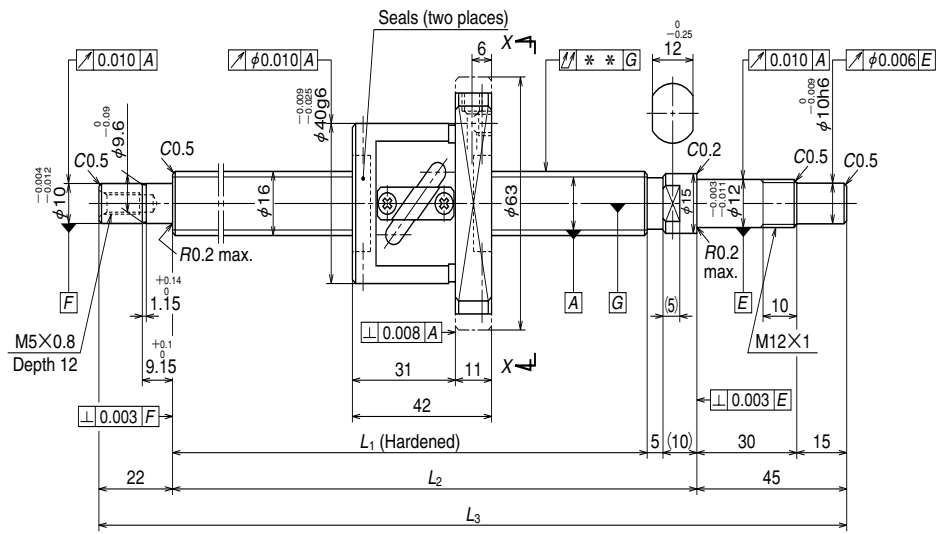

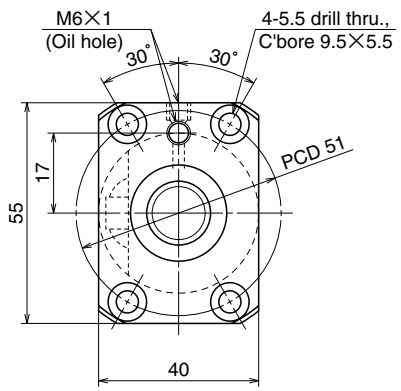

View X-X

Unit: mm

Ball screw specifications			
Product classification		Preloaded	Precise clearance
Shaft dia. × Lead / Direction of turn		16×5/Right	
Preload / Ball recirculation		P preload / Return tube	
Ball dia. / Ball circle dia.		3.175/16.5	
Effective turns of balls		2.5×1	
Accuracy grade / Preload / Axial play		C3/Z	C3/T
Basic load rating (N)	Dynamic C_a	4620	7330
	Static C_{0a}	6750	13500
Axial play		0	0.005 or less
Dynamic friction torque, (N·cm)		1.5~7.8	~2.0
Spacer ball		Yes	None
Factory packed grease		NSK grease LR3	
Internal spatial volume of nut (cm³)		2.6	

B 78

Unit: mm

Ball screw No.		Stroke		Screw shaft length			Lead accuracy			Shaft run-out **	Mass (Kg)	Permissible rotational speed N (min⁻¹) Supporting condition	
Preloaded (PFT)	Precise clearance (SFT)	Nominal	Maximum (L_1–Nut length)	L_1	L_2	L_3	T	e_p	υ_u			Fixed - Simple support	Fixed - Fixed
W1601FA-1P-C3Z5	**W1601FA-2-C3T5**	100	147	189	204	271	0	0.010	0.008	0.020	0.70	3000	3000
W1602FA-1P-C3Z5	**W1602FA-2-C3T5**	200	247	289	304	371	0	0.012	0.008	0.030	0.83	3000	3000
W1603FA-1P-C3Z5	**W1603FA-2-C3T5**	300	347	389	404	471	0	0.013	0.010	0.035	0.97	3000	3000
W1604FA-1P-C3Z5	**W1604FA-2-C3T5**	400	447	489	504	571	0	0.015	0.010	0.045	1.1	3000	3000
W1606FA-1P-C3Z5	**W1606FA-2-C3T5**	600	647	689	704	771	0	0.018	0.013	0.055	1.4	3000	3000
W1608FA-1P-C3Z5	**W1608FA-2-C3T5**	800	847	889	904	971	0	0.021	0.015	0.075	1.6	2570	3000

Remarks
1. We recommend NSK support unit WBK12-01A (square type, fixed side), WBK12S-01 (square type, simple support side), and WBK12-11 (round type, fixed side).
2. NSK grease LR3 is recommended. The amount for replenishing should be about 50% of nut internal space capacity.
3. Permissible rotational speed is determined by a d · n value and a critical speed. See page B509.
Root diameter of screw shaft (dr) is 13.2 mm.

www.bergab.ru Берг АБ bergab@ya.ru Тел. (495)-228-06-21, факс (495) 223-3071

www.bergab.ru Берг АБ bergab@ya.ru Тел. (495)-228-06-21, факс (495) 223-3071

φ16×16

Unit: mm

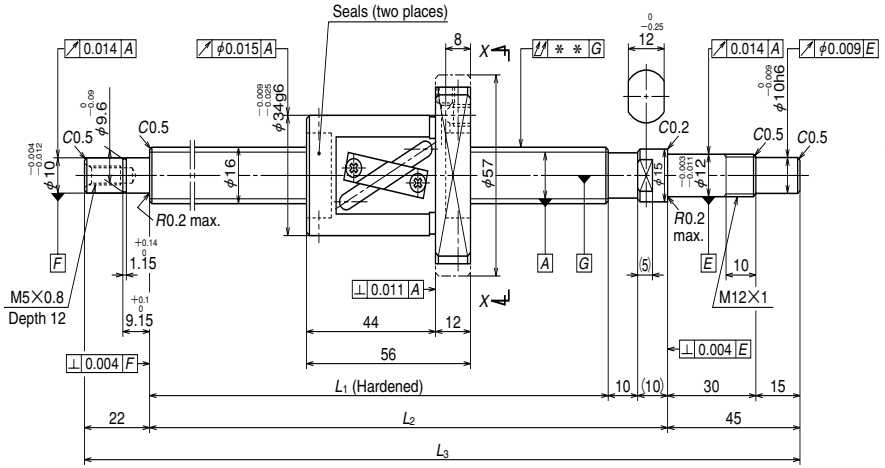

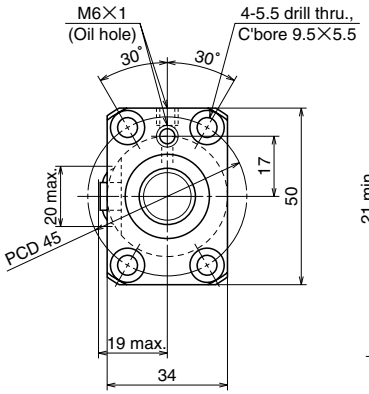

View X-X

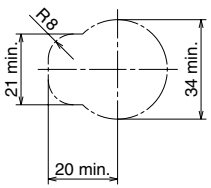

Housing hole and its clearance

Standard stock

Ball screw specifications			
Product classification		Preloaded	Precise clearance
Shaft dia. × Lead / Direction of turn		16×16/Right	
Preload / Ball recirculation		P preload / Return tube	
Ball dia. / Ball circle dia.		3.175/16.75	
Effective turns of balls		1.5×1	
Accuracy grade / Preload / Axial play		C5/Z	C5/T
Basic load rating (N)	Dynamic C_a	3600	4710
	Static C_{0a}	5410	8110
Axial play		0	0.005 or less
Dynamic friction torque, (N·cm)		1.5~7.8	~2.4
Spacer ball		Yes	None
Factory packed grease		NSK grease LR3	
Internal spatial volume of nut (cm³)		2.1	

Unit: mm

Ball screw No.		Stroke		Screw shaft length			Lead accuracy			Shaft run-out **	Mass (Kg)	Permissible rotational speed N (min⁻¹) Supporting condition	
Preloaded (LPFT)	Precise clearance (LSFT)	Nominal	Maximum (L_1–Nut length)	L_1	L_2	L_3	T	e_p	υ_u			Fixed - Simple support	Fixed - Fixed
W1601FA-3P-C5Z16	**W1601FA-4-C5T16**	100	128	184	204	271	0	0.020	0.018	0.025	0.69	3000	3000
W1602FA-3P-C5Z16	**W1602FA-4-C5T16**	150	178	234	254	321	0	0.023	0.018	0.035	0.77	3000	3000
W1602FA-5P-C5Z16	**W1602FA-6-C5T16**	200	228	284	304	371	0	0.023	0.018	0.035	0.84	3000	3000
W1603FA-3P-C5Z16	**W1603FA-4-C5T16**	250	278	334	354	421	0	0.025	0.020	0.040	0.92	3000	3000
W1603FA-5P-C5Z16	**W1603FA-6-C5T16**	300	328	384	404	471	0	0.025	0.020	0.040	0.99	3000	3000
W1604FA-3P-C5Z16	**W1604FA-4-C5T16**	350	378	434	454	521	0	0.027	0.020	0.050	1.1	3000	3000
W1604FA-5P-C5Z16	**W1604FA-6-C5T16**	400	428	484	504	571	0	0.027	0.020	0.050	1.1	3000	3000
W1605FA-1P-C5Z16	**W1605FA-2-C5T16**	450	478	534	554	621	0	0.030	0.023	0.050	1.2	3000	3000
W1605FA-3P-C5Z16	**W1605FA-4-C5T16**	500	528	584	604	671	0	0.030	0.023	0.065	1.3	3000	3000
W1606FA-3P-C5Z16	**W1606FA-4-C5T16**	550	578	634	654	721	0	0.035	0.025	0.065	1.4	3000	3000
W1606FA-5P-C5Z16	**W1606FA-6-C5T16**	600	628	684	704	771	0	0.035	0.025	0.065	1.4	3000	3000
W1607FA-1P-C5Z16	**W1607FA-2-C5T16**	700	728	784	804	871	0	0.035	0.025	0.085	1.6	3000	3000
W1608FA-3P-C5Z16	**W1608FA-4-C5T16**	800	828	884	904	971	0	0.040	0.027	0.085	1.7	2690	3000
W1610FA-1P-C5Z16	**W1610FA-2-C5T16**	1000	1028	1084	1104	1171	0	0.046	0.030	0.110	2.0	1770	2480

Remarks
1. We recommend NSK support unit WBK12-01A (square type, fixed side), WBK12S-01 (square type, simple support side), and WBK12-11 (round type, fixed side).
2. NSK grease LR3 is recommended. The amount for replenishing should be about 50% of nut internal space capacity.
3. Permissible rotational speed is determined by a d · n value and a critical speed. See page B509.
Root diameter of screw shaft (dr) is 13.4 mm.

www.bergab.ru Берг АБ bergab@ya.ru Тел. (495)-228-06-21, факс (495) 223-3071

www.bergab.ru Берг АБ bergab@ya.ru Тел. (495)-228-06-21, факс (495) 223-3071

φ16×32

Standard stock

Unit: mm

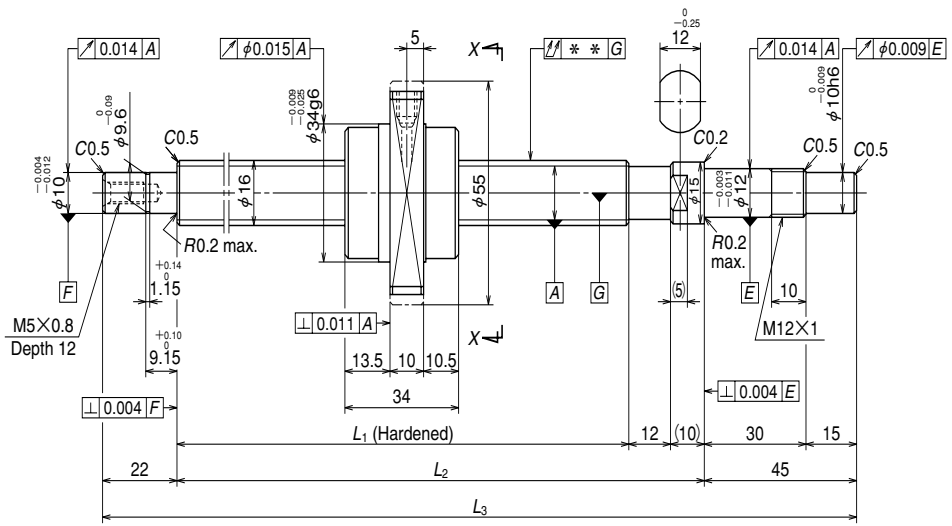

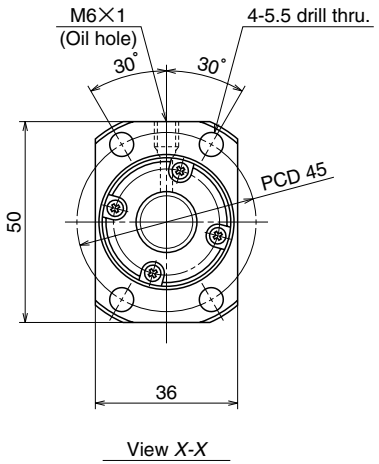

Ball screw specifications			
Product classification		Preloaded	Precise clearance
Shaft dia. × Lead / Direction of turn		16×32/Right	
Preload / Ball recirculation		P preload / End cap	
Ball dia. / Ball circle dia.		3.175/16.75	
Effective turns of balls		0.7×2	
Accuracy grade / Preload / Axial play		C5/Z	C5/T
Basic load rating (N)	Dynamic C_a	4000	
	Static C_{0a}	6690	
Axial play		0	0.005 or less
Dynamic friction torque, (N·cm)		1.5~9.8	~2.4
Spacer ball		None	
Factory packed grease		NSK grease LR3	
Internal spatial volume of nut (cm³)		2.0	

Unit: mm

Ball screw No.		Stroke	
Preloaded (UPFC)	Precise clearance (USFC)	Nominal	Maximum (L_1–Nut length)
W1603FA-7PGX-C5Z32	**W1603FA-8GX-C5T32**	300	348
W1605FA-5PGX-C5Z32	**W1605FA-6GX-C5T32**	500	548
W1608FA-5PGX-C5Z32	**W1608FA-6GX-C5T32**	800	848
W1612FA-1PGX-C5Z32	**W1612FA-2GX-C5T32**	1200	1248

Screw shaft length			Lead accuracy			Shaft run-out **	Mass (Kg)	Permissible rotational speed N (min⁻¹) Supporting condition	
L_1	L_2	L_3	T	e_p	υ_u			Fixed - Simple support	Fixed - Fixed
382	404	471	0	0.025	0.020	0.040	0.90	3000	3000
582	604	671	0	0.030	0.023	0.065	1.2	3000	3000
882	904	971	0	0.040	0.027	0.085	1.7	2630	3000
1282	1304	1371	0	0.054	0.035	0.150	2.3	1240	1740

Remarks
1. We recommend NSK support unit WBK12-01A (square type, fixed side), WBK12S-01 (square type, simple support side), and WBK12-11 (round type, fixed side).
2. NSK grease LR3 is recommended. The amount for replenishing should be about 50% of nut internal space capacity.
3. Nut does not have a seal.
4. Permissible rotational speed is determined by a d · n value and a critical speed. See page B509.
Root diameter of screw shaft (dr) is 13.4 mm.

www.bergab.ru Берг АБ bergab@ya.ru Тел. (495)-228-06-21, факс (495) 223-3071

www.bergab.ru Берг АБ bergab@ya.ru Тел. (495)-228-06-21, факс (495) 223-3071

φ20×4

Standard stock

Unit: mm

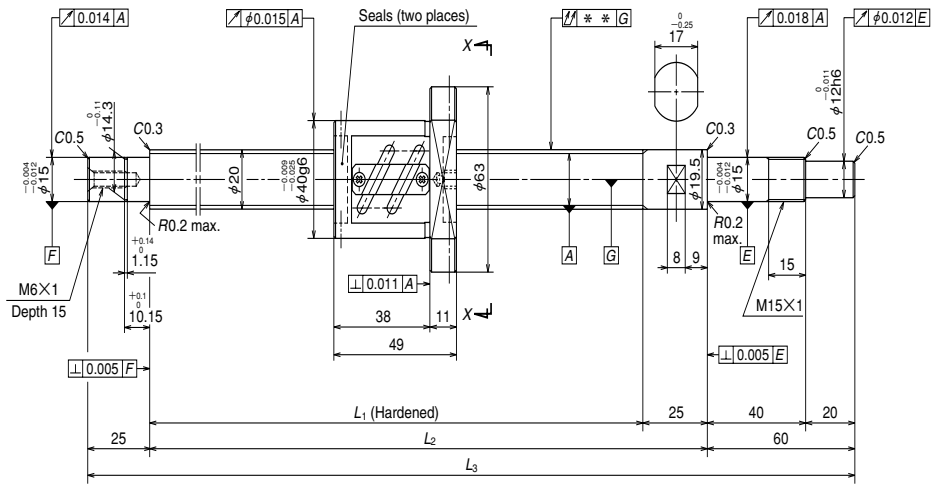

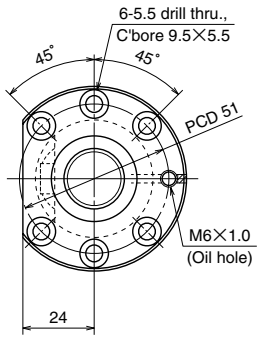

View *X-X*

Ball screw specifications		
Shaft dia. × Lead / Direction of turn		20×4/Right
Preload / Ball recirculation		P preload / Return tube
Ball dia. / Ball circle dia.		2.381/20.3
Effective turns of balls		2.5×2
Accuracy grade / Preload		C5/Z
Basic load rating (N)	Dynamic C_a	5420
	Static C_{0a}	10700
Preload (N)		294
Dynamic friction torque, median, (N·cm)		3.9
Spacer ball		Yes
Factory packed grease		**Refer to Remarks 2.**
Internal spatial volume of nut (cm³)		2.7

B 84

Unit: mm

Ball screw No.	Stroke		Screw shaft length		
	Nominal	Maximum (L_1–Nut length)	L_1	L_2	L_3
W2002SA-1P-C5Z4	150	176	225	250	335
W2002SA-2P-C5Z4	200	226	275	300	385
W2003SA-1P-C5Z4	300	326	375	400	485
W2004SA-1P-C5Z4	400	426	475	500	585
W2005SA-1P-C5Z4	500	526	575	600	685
W2006SA-1P-C5Z4	600	626	675	700	785

Lead accuracy			Shaft run-out **	Mass (Kg)	Permissible rotational speed N (min⁻¹) Supporting condition	
T	e_p	υ_u			Fixed - Simple support	Fixed - Fixed
–0.005	0.023	0.018	0.045	1.1	3000	3000
–0.007	0.023	0.018	0.045	1.2	3000	3000
–0.009	0.025	0.020	0.055	1.5	3000	3000
–0.011	0.027	0.020	0.070	1.7	3000	3000
–0.014	0.030	0.023	0.085	1.9	3000	3000
–0.016	0.035	0.025	0.085	2.1	3000	3000

Remarks 1. We recommend NSK support unit WBK15-01A (square type, fixed side), WBK15S-01 (square type, simple support side), and WBK15-11 (round type, fixed side).
2. Only rust preventive agent is applied at time of delivery. Please apply lubricant (oil or grease) before use.
3. Permissible rotational speed is determined by a d · n value and a critical speed. See page B509.
Root diameter of screw shaft (dr) is 17.8 mm.

www.bergab.ru Берг АБ bergab@ya.ru Тел. (495)-228-06-21, факс (495) 223-3071

www.bergab.ru Берг АБ bergab@ya.ru Тел. (495)-228-06-21, факс (495) 223-3071

φ20×5

Standard stock

Unit: mm

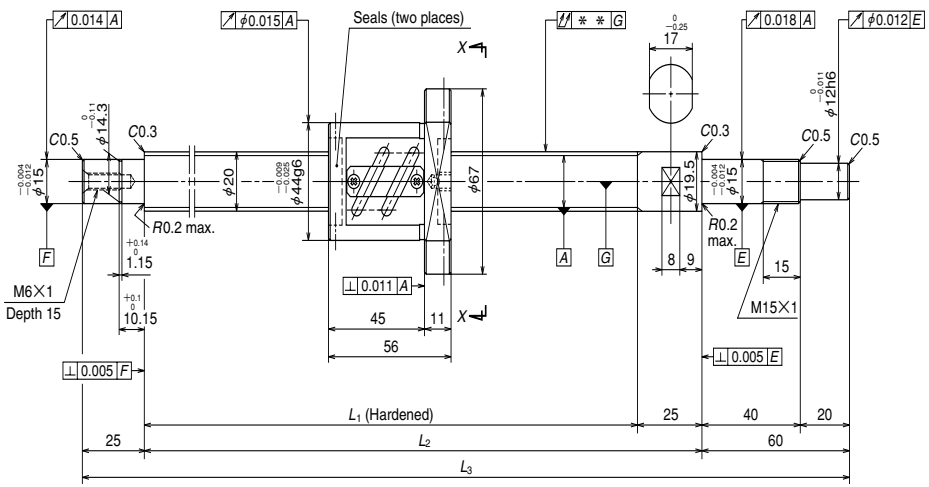

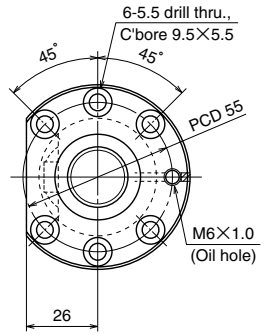

View X-X

Ball screw specifications		
Shaft dia. × Lead / Direction of turn		20×5/Right
Preload / Ball recirculation		P preload / Return tube
Ball dia. / Ball circle dia.		3.175/20.5
Effective turns of balls		2.5×2
Accuracy grade / Preload		C5/Z
Basic load rating (N)	Dynamic C_a	9410
	Static C_{0a}	17100
Preload (N)		490
Dynamic friction torque, median, (N·cm)		7.8
Spacer ball		Yes
Factory packed grease		**Refer to Remarks 2.**
Internal spatial volume of nut (cm³)		4.3

Unit: mm

Ball screw No.	Stroke		Screw shaft length		
	Nominal	Maximum (L_1–Nut length)	L_1	L_2	L_3
W2002SA-3P-C5Z5	150	169	225	250	335
W2002SA-4P-C5Z5	200	219	275	300	385
W2003SA-2P-C5Z5	300	319	375	400	485
W2004SA-2P-C5Z5	400	419	475	500	585
W2005SA-2P-C5Z5	500	519	575	600	685
W2007SA-1P-C5Z5	700	719	775	800	885

Lead accuracy			Shaft run-out **	Mass (Kg)	Permissible rotational speed N (min⁻¹) Supporting condition	
T	e_p	υ_u			Fixed - Simple support	Fixed - Fixed
-0.005	0.023	0.018	0.045	1.3	3000	3000
-0.007	0.023	0.018	0.045	1.4	3000	3000
-0.009	0.025	0.020	0.055	1.6	3000	3000
-0.011	0.027	0.020	0.070	1.8	3000	3000
-0.014	0.030	0.023	0.085	2.0	3000	3000
-0.019	0.035	0.025	0.110	2.5	3000	3000

Remarks 1. We recommend NSK support unit WBK15-01A (square type, fixed side), WBK15S-01 (square type, simple support side), and WBK15-11 (round type, fixed side).
2. Only rust preventive agent is applied at time of delivery. Please apply lubricant (oil or grease) before use.
3. Permissible rotational speed is determined by a d · n value and a critical speed. See page B509.
Root diameter of screw shaft (dr) is 17.2 mm.

www.bergab.ru Берг АБ bergab@ya.ru Тел. (495)-228-06-21, факс (495) 223-3071

www.bergab.ru Берг АБ bergab@ya.ru Тел. (495)-228-06-21, факс (495) 223-3071

φ20×10

Standard stock

Unit: mm

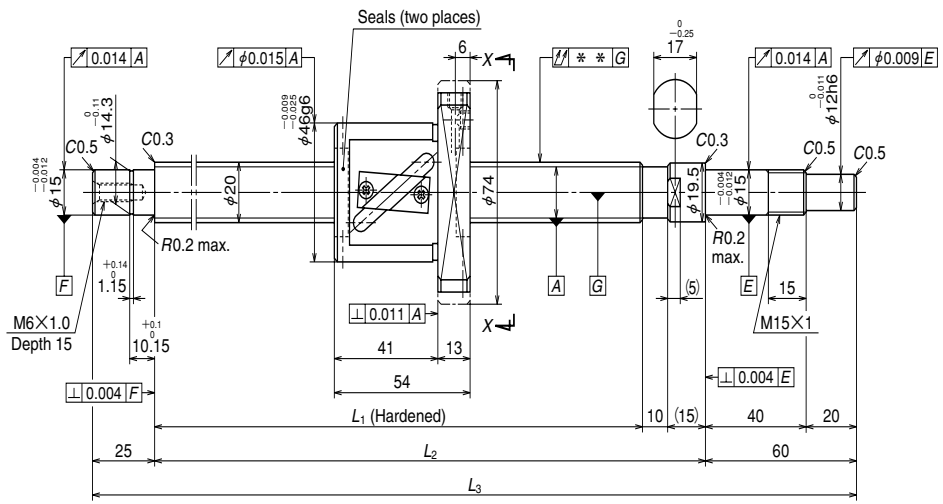

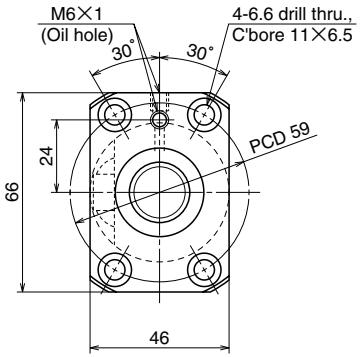

View X-X

Ball screw specifications			
Product classification		Preloaded	Precise clearance
Shaft dia. × Lead / Direction of turn		20×10/Right	
Preload / Ball recirculation		P preload / Return tube	
Ball dia. / Ball circle dia.		3.969/21	
Effective turns of balls		2.5×1	
Accuracy grade/ Preload / Axial play		C5/Z	C5/T
Basic load rating (N)	Dynamic C_a	6880	10900
	Static C_{0a}	10800	21700
Axial play		0	0.005 or less
Dynamic friction torque, (N·cm)		2.0~11.8	~2.9
Spacer ball		Yes	None
Factory packed grease		NSK grease LR3	
Internal spatial volume of nut (cm³)		4.7	

B 88

Unit: mm

Ball screw No.		Stroke		Screw shaft length			Lead accuracy			Shaft run-out **	Mass (Kg)	Permissible rotational speed N (min⁻¹) Supporting condition	
Preloaded (LPFT)	Precise clearance (LSFT)	Nominal	Maximum (L_1–Nut length)	L_1	L_2	L_3	T	e_p	υ_u			Fixed - Simple support	Fixed - Fixed
W2002FA-1P-C5Z10	**W2002FA-2-C5T10**	200	235	289	314	399	0	0.023	0.018	0.035	1.4	3000	3000
W2003FA-1P-C5Z10	**W2003FA-2-C5T10**	300	335	389	414	499	0	0.025	0.020	0.040	1.6	3000	3000
W2004FA-1P-C5Z10	**W2004FA-2-C5T10**	400	435	489	514	599	0	0.027	0.020	0.050	1.9	3000	3000
W2005FA-1P-C5Z10	**W2005FA-2-C5T10**	500	535	589	614	699	0	0.030	0.023	0.065	2.1	3000	3000
W2006FA-1P-C5Z10	**W2006FA-2-C5T10**	600	635	689	714	799	0	0.035	0.025	0.065	2.3	3000	3000
W2007FA-1P-C5Z10	**W2007FA-2-C5T10**	700	735	789	814	899	0	0.035	0.025	0.085	2.5	3000	3000
W2008FA-1P-C5Z10	**W2008FA-2-C5T10**	800	835	889	914	999	0	0.040	0.027	0.085	2.8	3000	3000
W2009FA-1P-C5Z10	**W2009FA-2-C5T10**	900	935	989	1014	1099	0	0.040	0.027	0.110	3.0	2680	3000
W2010FA-1P-C5Z10	**W2010FA-2-C5T10**	1000	1035	1089	1114	1199	0	0.046	0.030	0.110	3.2	2210	3000
W2011FA-1P-C5Z10	**W2011FA-2-C5T10**	1100	1135	1189	1214	1299	0	0.046	0.030	0.150	3.4	1840	2570
W2012FA-1P-C5Z10	**W2012FA-2-C5T10**	1200	1235	1289	1314	1399	0	0.054	0.035	0.150	3.7	1570	2190

Remarks
1. We recommend NSK support unit WBK15-01A (square type, fixed side), WBK15S-01 (square type, simple support side), and WBK15-11 (round type, fixed side).
2. NSK grease LR3 is recommended. The amount for replenishing should be about 50% of nut internal space capacity.
3. Permissible rotational speed is determined by a d · n value and a critical speed. See page B509.
Root diameter of screw shaft (dr) is 16.9 mm.

www.bergab.ru Берг АБ bergab@ya.ru Тел. (495)-228-06-21, факс (495) 223-3071

www.bergab.ru Берг АБ bergab@ya.ru Тел. (495)-228-06-21, факс (495) 223-3071

φ20×20

Standard stock

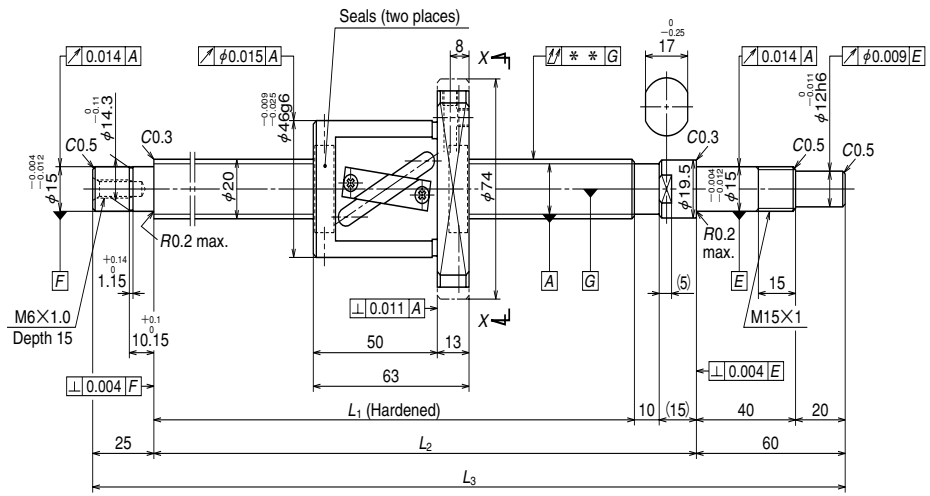

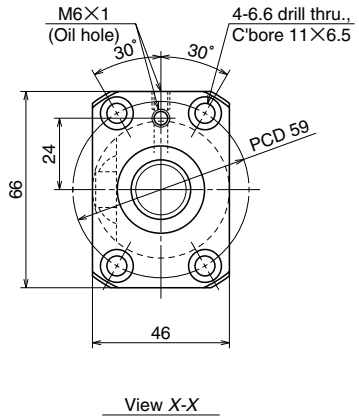

Unit: mm

Ball screw specifications			
Product classification		Preloaded	Precise clearance
Shaft dia. × Lead / Direction of turn		20×20/Right	
Preload / Ball recirculation		P preload / Return tube	
Ball dia. / Ball circle dia.		3.969/21	
Effective turns of balls		1.5×1	
Accuracy grade/ Preload / Axial play		C5/Z	C5/T
Basic load rating (N)	Dynamic C_a	5370	7040
	Static C_{0a}	8450	12700
Axial play		0	0.005 or less
Dynamic friction torque, (N·cm)		2.0~11.8	~2.9
Spacer ball		Yes	None
Factory packed grease		NSK grease LR3	
Internal spatial volume of nut (cm³)		4.2	

Unit: mm

Ball screw No.		Stroke		Screw shaft length			Lead accuracy			Shaft run-out **	Mass (Kg)	Permissible rotational speed N (min⁻¹) Supporting condition	
Preloaded (LPFT)	Precise clearance (LSFT)	Nominal	Maximum (L_1–Nut length)	L_1	L_2	L_3	T	e_p	υ_u			Fixed - Simple support	Fixed - Fixed
W2003FA-3P-C5Z20	**W2003FA-4-C5T20**	200	247	310	335	420	0	0.023	0.018	0.040	1.6	3000	3000
W2004FA-3P-C5Z20	**W2004FA-4-C5T20**	300	347	410	435	520	0	0.027	0.020	0.050	1.8	3000	3000
W2005FA-3P-C5Z20	**W2005FA-4-C5T20**	400	447	510	535	620	0	0.030	0.023	0.050	2.0	3000	3000
W2006FA-3P-C5Z20	**W2006FA-4-C5T20**	500	547	610	635	720	0	0.030	0.023	0.065	2.3	3000	3000
W2007FA-3P-C5Z20	**W2007FA-4-C5T20**	600	647	710	735	820	0	0.035	0.025	0.085	2.5	3000	3000
W2008FA-3P-C5Z20	**W2008FA-4-C5T20**	700	747	810	835	920	0	0.040	0.027	0.085	2.7	3000	3000
W2009FA-3P-C5Z20	**W2009FA-4-C5T20**	800	847	910	935	1020	0	0.040	0.027	0.110	3.0	3000	3000
W2010FA-3P-C5Z20	**W2010FA-4-C5T20**	900	947	1010	1035	1120	0	0.046	0.030	0.110	3.2	2590	3000
W2011FA-3P-C5Z20	**W2011FA-4-C5T20**	1000	1047	1110	1135	1220	0	0.046	0.030	0.110	3.4	2140	2970
W2012FA-3P-C5Z20	**W2012FA-4-C5T20**	1100	1147	1210	1235	1320	0	0.046	0.030	0.150	3.7	1790	2500
W2015FA-1P-C5Z20	**W2015FA-2-C5T20**	1400	1447	1510	1535	1620	0	0.054	0.035	0.180	4.4	1140	1610

Remarks
1. We recommend NSK support unit WBK15-01A (square type, fixed side), WBK15S-01 (square type, simple support side), and WBK15-11 (round type, fixed side).
2. NSK grease LR3 is recommended. The amount for replenishing should be about 50% of nut internal space capacity.
3. Permissible rotational speed is determined by a d · n value and a critical speed. See page B509.
Root diameter of screw shaft (dr) is 16.9 mm.

www.bergab.ru Берг АБ bergab@ya.ru Тел. (495)-228-06-21, факс (495) 223-3071

www.bergab.ru Берг АБ bergab@ya.ru Тел. (495)-228-06-21, факс (495) 223-3071

φ20×40

Standard stock

Unit: mm

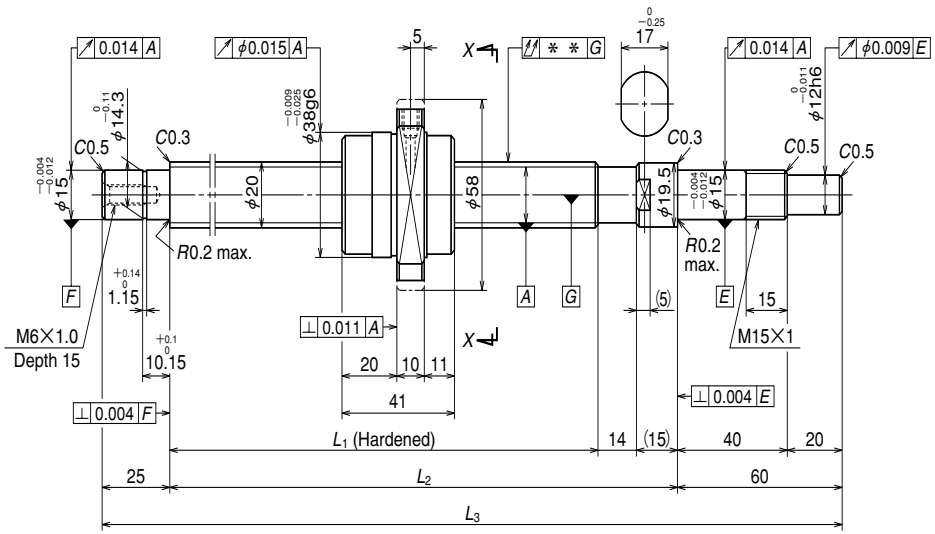

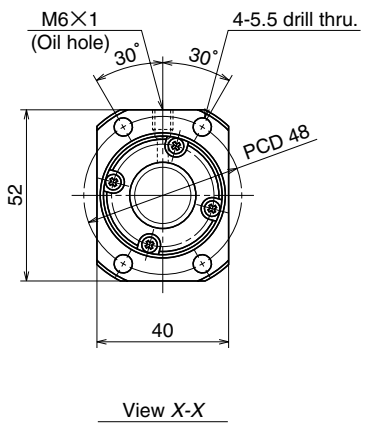

Ball screw specifications			
Product classification		Preloaded	Precise clearance
Shaft dia. × Lead / Direction of turn		20×40/Right	
Preload / Ball recirculation		P preload / End cap	
Ball dia. / Ball circle dia.		3.175/20.75	
Effective turns of balls		0.7×2	
Accuracy grade/ Preload / Axial play		C5/Z	C5/T
Basic load rating (N)	Dynamic C_a	4490	
	Static C_{0a}	8640	
Axial play		0	0.005 or less
Dynamic friction torque, (N·cm)		2.0~11.8	~2.9
Spacer ball		None	
Factory packed grease		NSK grease LR3	
Internal spatial volume of nut (cm³)		2.8	

B 92

Unit: mm

Ball screw No.		Stroke		Screw shaft length			Lead accuracy			Shaft run-out **	Mass (Kg)	Permissible rotational speed N (min⁻¹) Supporting condition	
Preloaded (UPFC)	Precise clearance (USFC)	Nominal	Maximum (L_1–Nut length)	L_1	L_2	L_3	T	e_p	υ_u			Fixed - Simple support	Fixed - Fixed
W2005FA-5PGX-C5Z40	**W2005FA-6GX-C5T40**	400	465	506	535	620	0	0.030	0.023	0.050	1.7	3000	3000
W2007FA-5PGX-C5Z40	**W2007FA-6GX-C5T40**	600	665	706	735	820	0	0.035	0.025	0.085	2.2	3000	3000
W2009FA-5PGX-C5Z40	**W2009FA-6GX-C5T40**	800	865	906	935	1020	0	0.040	0.027	0.110	2.7	3000	3000
W2011FA-5PGX-C5Z40	**W2011FA-6GX-C5T40**	1000	1065	1106	1135	1220	0	0.046	0.030	0.110	3.1	2170	3000
W2013FA-1PGX-C5Z40	**W2013FA-2GX-C5T40**	1200	1265	1306	1335	1420	0	0.054	0.035	0.150	3.6	1550	2160
W2017FA-1PGX-C5Z40	**W2017FA-2GX-C5T40**	1600	1665	1706	1735	1820	0	0.065	0.040	0.230	4.6	910	1270

Remarks
1. We recommend NSK support unit WBK15-01A (square type, fixed side), WBK15S-01 (square type, simple support side), and WBK15-11 (round type, fixed side).
2. NSK grease LR3 is recommended. The amount for replenishing should be about 50% of nut internal space capacity.
3. Nut does not have a seal.
4. Permissible rotational speed is determined by a d · n value and a critical speed. See page B509.
Root diameter of screw shaft (dr) is 17.4 mm.

www.bergab.ru Берг АБ bergab@ya.ru Тел. (495)-228-06-21, факс (495) 223-3071

www.bergab.ru Берг АБ bergab@ya.ru Тел. (495)-228-06-21, факс (495) 223-3071

φ25×4

Standard stock

Unit: mm

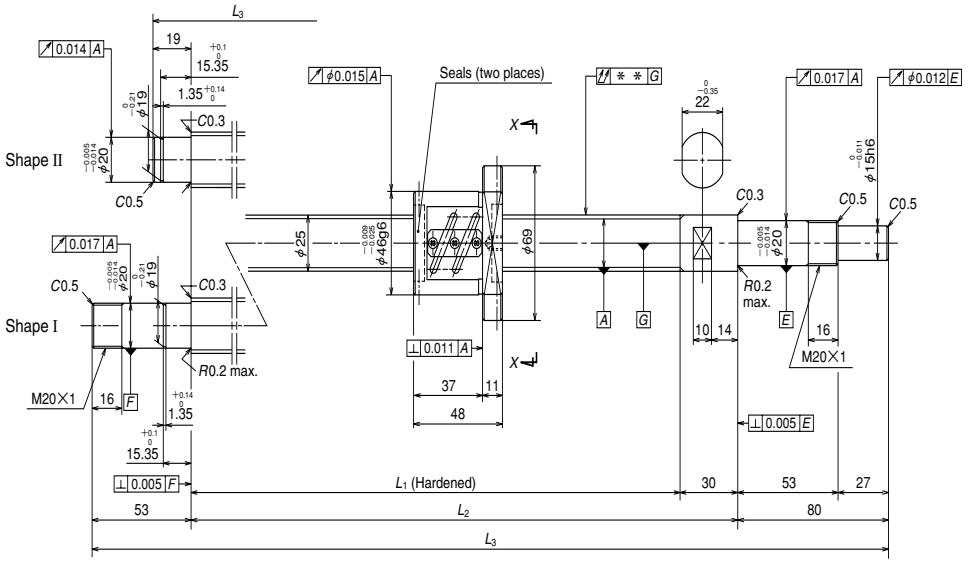

Ball screw specifications		
Shaft dia.×Lead / Direction of turn		25×4/Right
Preload / Ball recirculation		P preload / Return tube
Ball dia. / Ball circle dia.		2.381/25.3
Effective turns of balls		2.5×2
Accuracy grade / Preload		C5/Z
Basic load rating (N)	Dynamic C_a	6020
	Static C_{0a}	13600
Preload (N)		290
Dynamic friction torque, median, (N·cm)		4.9
Spacer ball		Yes
Factory packed grease		**Refer to Remarks 2.**
Internal spatial volume of nut (cm³)		3.2

Unit: mm

Ball screw No.	Stroke		Screw shaft length		
	Nominal	Maximum (L_1–Nut length)	L_1	L_2	L_3
W2502SA-1P-C5Z4	150	172	220	250	349
W2502SA-2P-C5Z4	200	222	270	300	399
W2503SA-1P-C5Z4	300	322	370	400	499
W2504SA-1P-C5Z4	400	422	470	500	599
W2505SA-1P-C5Z4	500	522	570	600	733
W2507SA-1P-C5Z4	700	722	770	800	933

Left side shaft end	Lead accuracy			Shaft run-out **	Mass (Kg)	Permissible rotational speed N (min⁻¹) Supporting condition	
	T	e_p	υ_u			Fixed - Simple support	Fixed - Fixed
Ⅱ	–0.005	0.023	0.018	0.035	1.6	2800	—
Ⅱ	–0.006	0.023	0.018	0.035	1.8	2800	—
Ⅱ	–0.009	0.025	0.020	0.040	2.2	2800	—
Ⅱ	–0.011	0.027	0.020	0.050	2.5	2800	—
Ⅰ	–0.014	0.030	0.023	0.060	3.0	2800	2800
Ⅰ	–0.018	0.035	0.025	0.075	3.7	2800	2800

Remarks 1. We recommend NSK support unit WBK20-01A (square type, fixed side), WBK20S-01 (square type, simple support side), and WBK20-11 (round type, fixed side).
2. Only rust preventive agent is applied at time of delivery. Please apply lubricant (oil or grease) before use.
3. Permissible rotational speed is determined by a d · n value and a critical speed. See page B509.
Root diameter of screw shaft (dr) is 22.8 mm.

www.bergab.ru Берг АБ bergab@ya.ru Тел. (495)-228-06-21, факс (495) 223-3071

www.bergab.ru Берг АБ bergab@ya.ru Тел. (495)-228-06-21, факс (495) 223-3071

φ25×5

Standard stock

Unit: mm

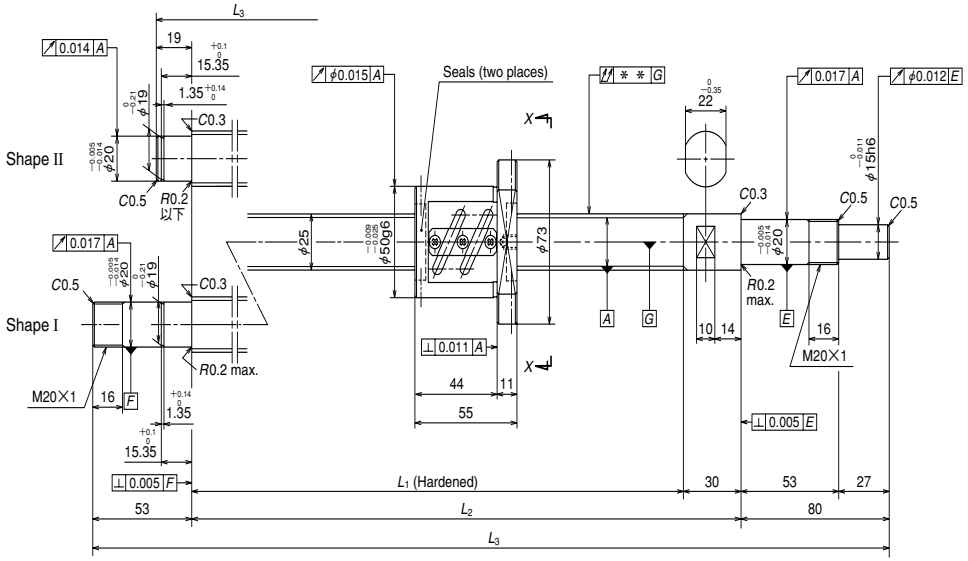

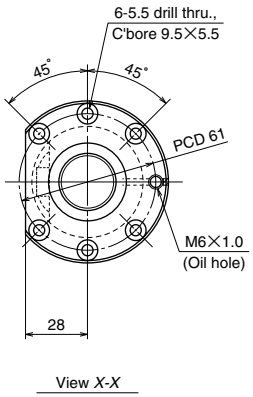

Ball screw specifications		
Shaft dia. × Lead / Direction of turn		25×5/Right
Preload / Ball recirculation		P preload / Return tube
Ball dia. / Ball circle dia.		3.175/25.5
Effective turns of balls		2.5×2
Accuracy grade / Preload		C5/Z
Basic load rating (N)	Dynamic C_a	10400
	Static C_{0a}	21900
Preload (N)		540
Dynamic friction torque, median, (N·cm)		8.8
Spacer ball		Yes
Factory packed grease		**Refer to Remarks 2.**
Internal spatial volume of nut (cm³)		5.0

B 96

Unit: mm

Ball screw No.	Stroke		Screw shaft length		
	Nominal	Maximum (L_1–Nut length)	L_1	L_2	L_3
W2502SA-3P-C5Z5	150	165	220	250	349
W2502SA-4P-C5Z5	200	215	270	300	399
W2503SA-2P-C5Z5	300	315	370	400	499
W2504SA-2P-C5Z5	400	415	470	500	599
W2505SA-2P-C5Z5	500	515	570	600	733
W2506SA-1P-C5Z5	600	615	670	700	833
W2507SA-2P-C5Z5	700	715	770	800	933
W2509SA-1P-C5Z5	900	915	970	1000	1133
W2511SA-1P-C5Z5	1000	1115	1170	1200	1333

Left side shaft end	Lead accuracy			Shaft run-out **	Mass (Kg)	Permissible rotational speed N (min⁻¹) Supporting condition	
	T	e_p	υ_u			Fixed - Simple support	Fixed - Fixed
Ⅱ	–0.005	0.023	0.018	0.035	1.8	2800	—
Ⅱ	–0.006	0.023	0.018	0.035	2.0	2800	—
Ⅱ	–0.009	0.025	0.020	0.040	2.3	2800	—
Ⅱ	–0.011	0.027	0.020	0.050	2.7	2800	—
Ⅰ	–0.014	0.030	0.023	0.060	3.1	2800	2800
Ⅰ	–0.016	0.035	0.025	0.075	3.4	2800	2800
Ⅰ	–0.018	0.035	0.025	0.075	3.8	2800	2800
Ⅰ	–0.023	0.040	0.027	0.090	4.5	2800	2800
Ⅰ	–0.028	0.046	0.030	0.120	5.2	2480	2800

Remarks 1. We recommend NSK support unit WBK20-01A (square type, fixed side), WBK20S-01 (square type, simple support side), and WBK20-11 (round type, fixed side).
2. Only rust preventive agent is applied at time of delivery. Please apply lubricant (oil or grease) before use.
3. Permissible rotational speed is determined by a d · n value and a critical speed. See page B509.
Root diameter of screw shaft (dr) is 22.2 mm.

www.bergab.ru Берг АБ bergab@ya.ru Тел. (495)-228-06-21, факс (495) 223-3071

www.bergab.ru Берг АБ bergab@ya.ru Тел. (495)-228-06-21, факс (495) 223-3071

φ25×6

Standard stock

Unit: mm

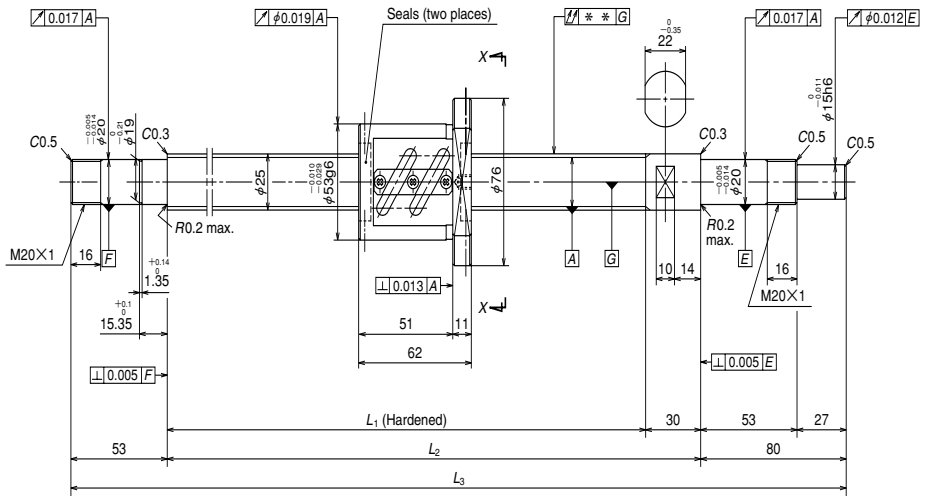

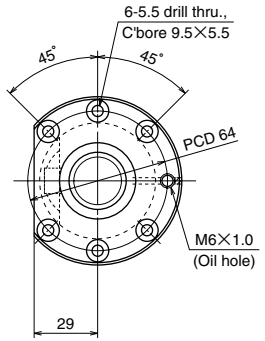

View *X-X*

Ball screw specifications		
Shaft dia. × Lead / Direction of turn		25×6/Right
Preload / Ball recirculation		P preload / Return tube
Ball dia. / Ball circle dia.		3.969/25.5
Effective turns of balls		2.5×2
Accuracy grade / Preload		C5/Z
Basic load rating (N)	Dynamic C_a	14100
	Static C_{0a}	26800
Preload (N)		685
Dynamic friction torque, median, (N·cm)		13.8
Spacer ball		Yes
Factory packed grease		**Refer to Remarks 2.**
Internal spatial volume of nut (cm³)		7.0

B 98

Unit: mm

Ball screw No.	Stroke		Screw shaft length			Lead accuracy			Shaft run-out **	Mass (Kg)	Permissible rotational speed N (min⁻¹) Supporting condition	
	Nominal	Maximum (L_1–Nut length)	L_1	L_2	L_3	T	e_p	υ_u			Fixed - Simple support	Fixed - Fixed
W2503SA-3P-C5Z6	250	308	370	400	533	–0.009	0.025	0.020	0.050	2.5	2800	2800
W2505SA-3P-C5Z6	450	508	570	600	733	–0.014	0.030	0.023	0.060	3.2	2800	2800
W2507SA-3P-C5Z6	650	708	770	800	933	–0.018	0.035	0.025	0.075	3.9	2800	2800
W2511SA-2P-C5Z6	1050	1108	1170	1200	1333	–0.028	0.046	0.030	0.120	5.2	2410	2800

Remarks 1. We recommend NSK support unit WBK20-01A (square type, fixed side), WBK20S-01 (square type, simple support side), and WBK20-11 (round type, fixed side).
2. Only rust preventive agent is applied at time of delivery. Please apply lubricant (oil or grease) before use.
3. Permissible rotational speed is determined by a d · n value and a critical speed. See page B509.
Root diameter of screw shaft (dr) is 21.4 mm.

www.bergab.ru Берг АБ bergab@ya.ru Тел. (495)-228-06-21, факс (495) 223-3071

www.bergab.ru Берг АБ bergab@ya.ru Тел. (495)-228-06-21, факс (495) 223-3071

φ25×10

Unit: mm

Standard stock

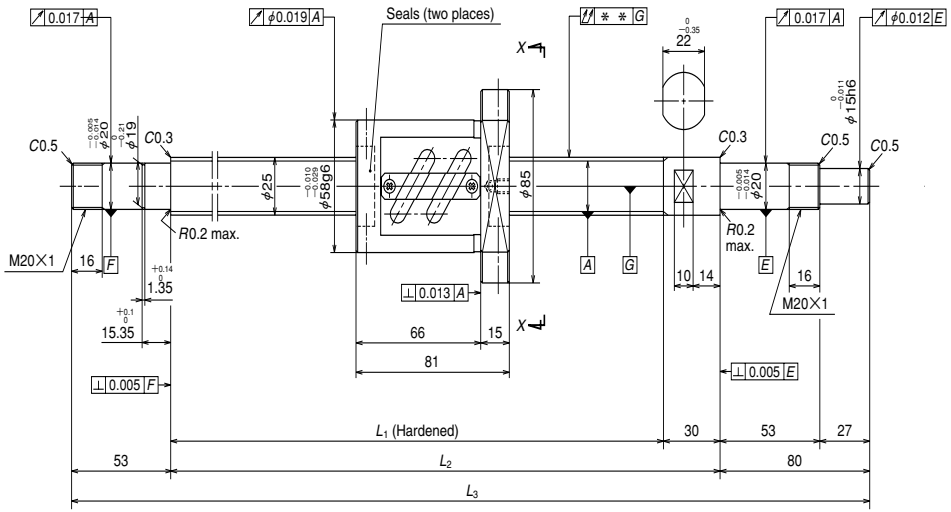

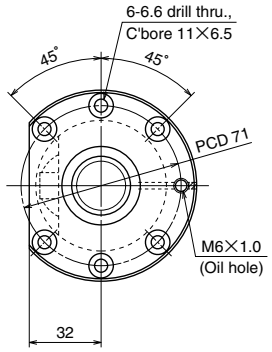

View X-X

Ball screw specifications		
Shaft dia. × Lead / Direction of turn		25×10/Right
Preload / Ball recirculation		P preload / Return tube
Ball dia. / Ball circle dia.		4.762/25.5
Effective turns of balls		1.5×2
Accuracy grade / Preload		C5/Z
Basic load rating (N)	Dynamic C_a	11600
	Static C_{0a}	19000
Preload (N)		585
Dynamic friction torque, median, (N·cm)		13.8
Spacer ball		Yes
Factory packed grease		**Refer to Remarks 2.**
Internal spatial volume of nut (cm³)		9.5

Unit: mm

Ball screw No.	Stroke		Screw shaft length			Lead accuracy			Shaft run-out **	Mass (Kg)	Permissible rotational speed N (min⁻¹) Supporting condition	
	Nominal	Maximum (L_1–Nut length)	L_1	L_2	L_3	T	e_p	υ_u			Fixed - Simple support	Fixed - Fixed
W2503SA-4P-C5Z10	250	289	370	400	533	–0.009	0.025	0.020	0.050	3.2	2800	2800
W2505SA-4P-C5Z10	450	489	570	600	733	–0.014	0.030	0.023	0.060	3.8	2800	2800
W2507SA-4P-C5Z10	650	689	770	800	933	–0.018	0.035	0.025	0.075	4.5	2800	2800
W2509SA-2P-C5Z10	850	889	970	1000	1133	–0.023	0.040	0.027	0.090	5.2	2800	2800
W2511SA-3P-C5Z10	1050	1089	1170	1200	1333	–0.028	0.046	0.030	0.120	5.9	2340	2800
W2514SA-1P-C5Z10	1350	1389	1470	1500	1633	–0.035	0.054	0.035	0.150	6.9	1470	2050

Remarks 1. We recommend NSK support unit WBK20-01A (square type, fixed side), WBK20S-01 (square type, simple support side), and WBK20-11 (round type, fixed side).
2. Only rust preventive agent is applied at time of delivery. Please apply lubricant (oil or grease) before use.
3. Permissible rotational speed is determined by a d · n value and a critical speed. See page B509.
Root diameter of screw shaft (dr) is 20.5 mm.

www.bergab.ru Берг АБ bergab@ya.ru Тел. (495)-228-06-21, факс (495) 223-3071

www.bergab.ru Берг АБ bergab@ya.ru Тел. (495)-228-06-21, факс (495) 223-3071

φ25×20

Unit: mm

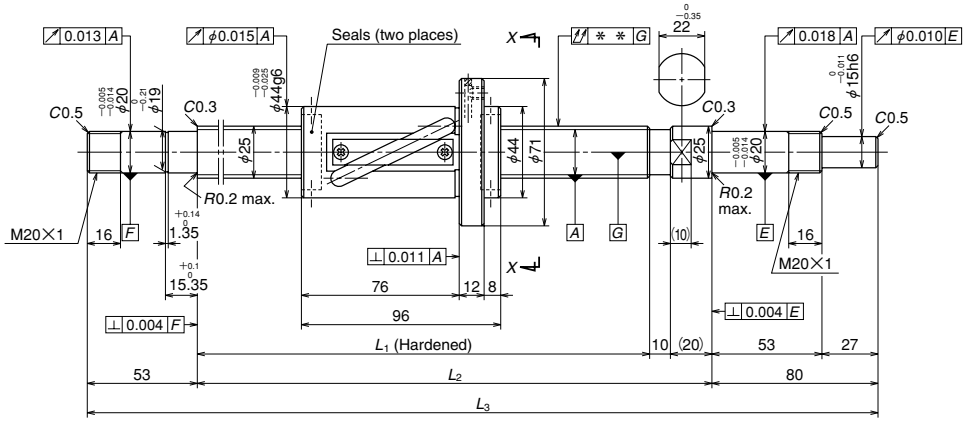

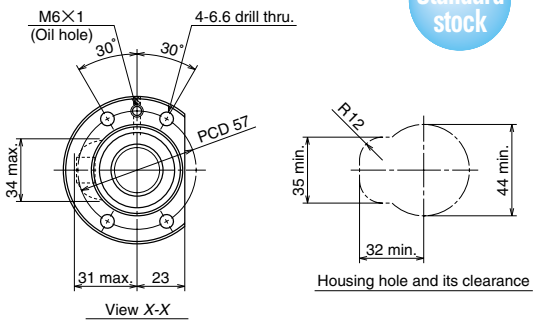

Standard stock

Ball screw specifications			
Product classification		Preloaded	Precise clearance
Shaft dia. × Lead / Direction of turn		25×20/Right	
Preload / Ball recirculation		P preload / Return tube	
Ball dia. / Ball circle dia.		4.762/26.25	
Effective turns of balls		2.5×1	
Accuracy grade/ Preload / Axial play		C5/Z	C5/T
Basic load rating (N)	Dynamic C_a	9900	15700
	Static C_{0a}	16400	32800
Axial play		0	0.005 or less
Dynamic friction torque, (N·cm)		3.9~24.5	4.9
Spacer ball		Yes	None
Factory packed grease		NSK grease LR3	
Internal spatial volume of nut (cm³)		12	

B 102

Unit: mm

Ball screw No.		Stroke		Screw shaft length			Lead accuracy			Shaft run-out **	Mass (Kg)	Permissible rotational speed N (min⁻¹) Supporting condition	
Preloaded (LPFT)	Precise clearance (LSFT)	Nominal	Maximum (L_1–Nut length)	L_1	L_2	L_3	T	e_p	υ_u			Fixed - Simple support	Fixed - Fixed
W2507FA-1P-C5Z20	**W2507FA-2-C5T20**	600	654	750	780	913	0	0.035	0.025	0.055	4.0	2800	2800
W2509FA-1P-C5Z20	**W2509FA-2-C5T20**	800	854	950	980	1113	0	0.040	0.027	0.070	4.7	2800	2800
W2511FA-1P-C5Z20	**W2511FA-2-C5T20**	1000	1054	1150	1180	1313	0	0.046	0.030	0.090	5.4	2560	2800
W2513FA-1P-C5Z20	**W2513FA-2-C5T20**	1200	1254	1350	1380	1513	0	0.054	0.035	0.090	6.2	1840	2550
W2515FA-1P-C5Z20	**W2515FA-2-C5T20**	1400	1454	1550	1580	1713	0	0.054	0.035	0.120	6.9	1390	1940
W2517FA-1P-C5Z20	**W2517FA-2-C5T20**	1600	1654	1750	1780	1913	0	0.065	0.040	0.120	7.6	1080	1520
W2521FA-1P-C5Z20	**W2521FA-2-C5T20**	2000	2054	2150	2180	2313	0	0.077	0.046	0.160	9.1	710	1000

Remarks
1. We recommend NSK support unit WBK20-01A (square type, fixed side), WBK20S-01 (square type, simple support side), and WBK20-11 (round type, fixed side).
2. NSK grease LR3 is recommended. The amount for replenishing should be about 50% of nut internal space capacity.
3. Permissible rotational speed is determined by a d · n value and a critical speed. See page B509.
Root diameter of screw shaft (dr) is 21.3 mm.

www.bergab.ru Берг АБ bergab@ya.ru Тел. (495)-228-06-21, факс (495) 223-3071

www.bergab.ru Берг АБ bergab@ya.ru Тел. (495)-228-06-21, факс (495) 223-3071

φ25×25

Unit: mm

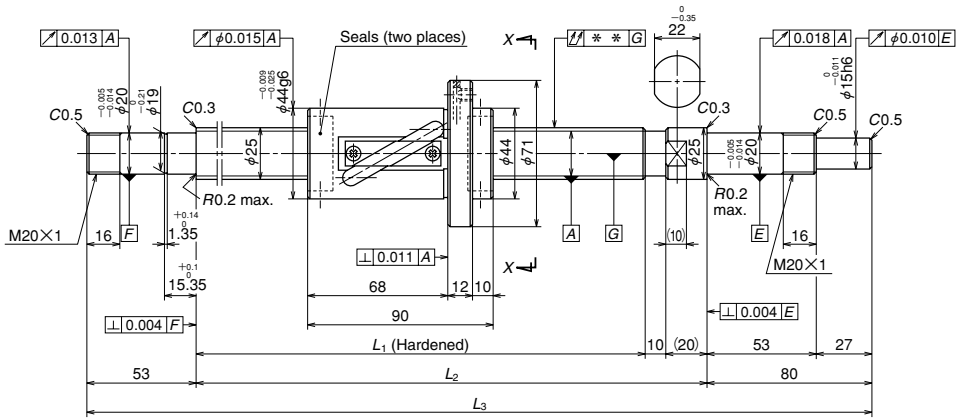

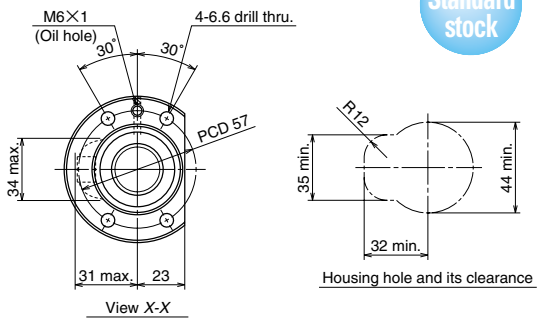

Standard stock

Ball screw specifications			
Product classification		Preloaded	Precise clearance
Shaft dia. × Lead / Direction of turn		25×25/Right	
Preload / Ball recirculation		P preload / Return tube	
Ball dia. / Ball circle dia.		4.762/26.25	
Effective turns of balls		1.5×1	
Accuracy grade/ Preload / Axial play		C5/Z	C5/T
Basic load rating (N)	Dynamic C_a	7730	10100
	Static C_{0a}	12700	19100
Axial play		0	0.005 or less
Dynamic friction torque, (N·cm)		3.9~24.5	4.9
Spacer ball		Yes	None
Factory packed grease		NSK grease LR3	
Internal spatial volume of nut (cm³)		7.5	

B 104

Unit: mm

Ball screw No.		Stroke		Screw shaft length			Lead accuracy			Shaft run-out **	Mass (Kg)	Permissible rotational speed N (min⁻¹) Supporting condition	
Preloaded (LPFT)	Precise clearance (LSFT)	Nominal	Maximum (L_1–Nut length)	L_1	L_2	L_3	T	e_p	υ_u			Fixed - Simple support	Fixed - Fixed
W2507FA-3P-C5Z25	**W2507FA-4-C5T25**	600	660	750	780	913	0	0.035	0.025	0.055	4.0	2800	2800
W2509FA-3P-C5Z25	**W2509FA-4-C5T25**	800	860	950	980	1113	0	0.040	0.027	0.070	4.7	2800	2800
W2511FA-3P-C5Z25	**W2511FA-4-C5T25**	1000	1060	1150	1180	1313	0	0.046	0.030	0.090	5.4	2540	2800
W2513FA-3P-C5Z25	**W2513FA-4-C5T25**	1200	1260	1350	1380	1513	0	0.054	0.035	0.090	6.2	1830	2540
W2515FA-3P-C5Z25	**W2515FA-4-C5T25**	1400	1460	1550	1580	1713	0	0.054	0.035	0.120	7.0	1380	1930
W2517FA-3P-C5Z25	**W2517FA-4-C5T25**	1600	1660	1750	1780	1913	0	0.065	0.040	0.120	7.7	1080	1510
W2521FA-3P-C5Z25	**W2521FA-4-C5T25**	2000	2060	2150	2180	2313	0	0.077	0.046	0.160	9.1	710	1000

Remarks
1. We recommend NSK support unit WBK20-01A (square type, fixed side), WBK20S-01 (square type, simple support side), and WBK20-11 (round type, fixed side).
2. NSK grease LR3 is recommended. The amount for replenishing should be about 50% of nut internal space capacity.
3. Permissible rotational speed is determined by a d · n value and a critical speed. See page B509.
Root diameter of screw shaft (dr) is 21.3 mm.

www.bergab.ru Берг АБ bergab@ya.ru Тел. (495)-228-06-21, факс (495) 223-3071

www.bergab.ru Берг АБ bergab@ya.ru Тел. (495)-228-06-21, факс (495) 223-3071

φ25×50

Unit: mm

Standard stock

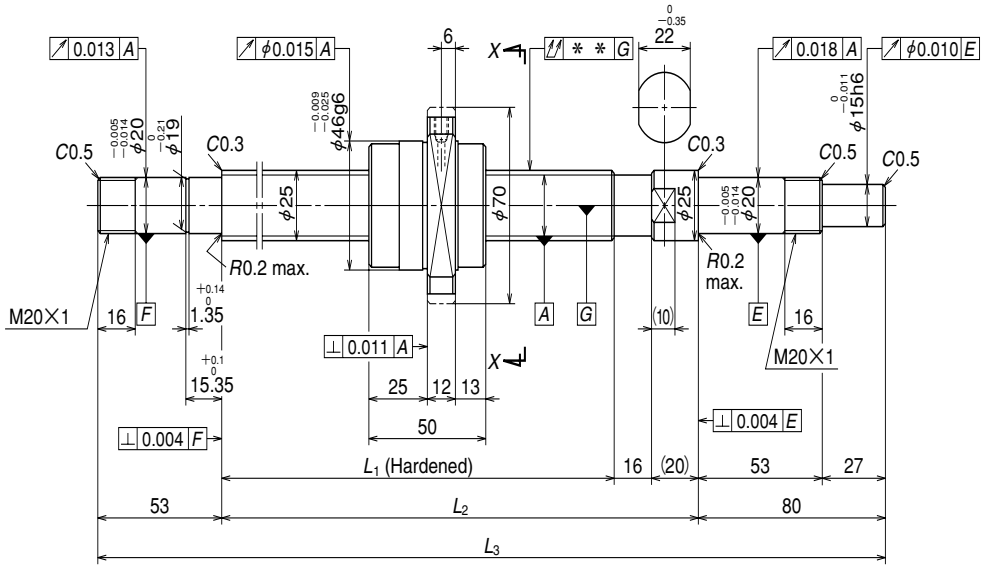

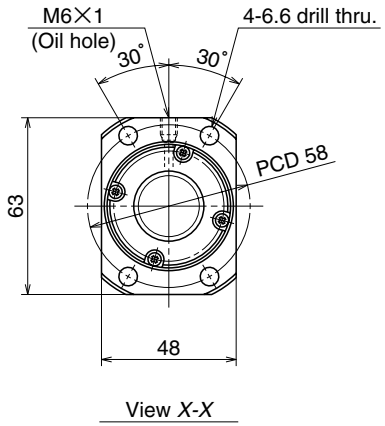

Ball screw specifications			
Product classification		Preloaded	Precise clearance
Shaft dia.×Lead / Direction of turn		25×50/Right	
Preload / Ball recirculation		P preload / End cap	
Ball dia. / Ball circle dia.		3.969/26	
Effective turns of balls		0.7×2	
Accuracy grade/ Preload / Axial play		C5/Z	C5/T
Basic load rating (N)	Dynamic C_a	6690	
	Static C_{0a}	13500	
Axial play		0	0.005 or less
Dynamic friction torque, (N·cm)		2.9～21.5	～4.9
Spacer ball		None	
Factory packed grease		NSK grease LR3	
Internal spatial volume of nut (cm³)		4.2	

B 106

Unit: mm

Ball screw No.		Stroke		Screw shaft length			Lead accuracy			Shaft run-out **	Mass (Kg)	Permissible rotational speed N (min⁻¹) Supporting condition	
Preloaded (UPFC)	Precise clearance (USGC)	Nominal	Maximum (L_1–Nut length)	L_1	L_2	L_3	T	e_p	υ_u			Fixed - Simple support	Fixed - Fixed
W2508FA-1PGX-C5Z50	**W2508FA-2GX-C5T50**	700	794	844	880	1013	0	0.040	0.027	0.070	4.1	2800	2800
W2511FA-5PGX-C5Z50	**W2511FA-6GX-C5T50**	1000	1094	1144	1180	1313	0	0.046	0.030	0.090	5.3	2550	2800
W2516FA-1PGX-C5Z50	**W2516FA-2GX-C5T50**	1500	1594	1644	1680	1813	0	0.065	0.040	0.120	7.2	1230	1710
W2521FA-5PGX-C5Z50	**W2521FA-6GX-C5T50**	2000	2094	2144	2180	2313	0	0.077	0.046	0.160	9.1	720	1010

Remarks
1. We recommend NSK support unit WBK20-01A (square type, fixed side), WBK20S-01 (square type, simple support side), and WBK20-11 (round type, fixed side).
2. NSK grease LR3 is recommended. The amount for replenishing should be about 50% of nut internal space capacity.
3. Nut does not have a seal.
4. Permissible rotational speed is determined by a d · n value and a critical speed. See page B509.
Root diameter of screw shaft (dr) is 21.9 mm.

www.bergab.ru Берг АБ bergab@ya.ru Тел. (495)-228-06-21, факс (495) 223-3071

www.bergab.ru Берг АБ bergab@ya.ru Тел. (495)-228-06-21, факс (495) 223-3071

φ28×5

Standard stock

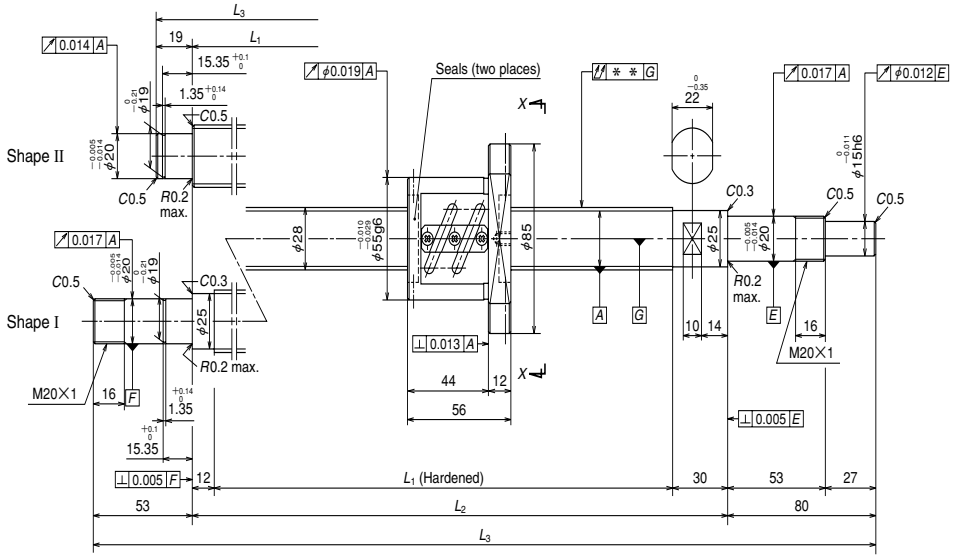

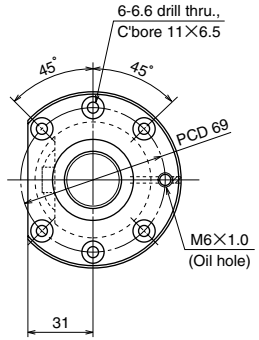

View X-X

Unit: mm

Ball screw specifications		
Shaft dia. × Lead / Direction of turn		28×5/Right
Preload / Ball recirculation		P preload / Return tube
Ball dia. / Ball circle dia.		3.175/28.5
Effective turns of balls		2.5×2
Accuracy grade / Preload		C5/Z
Basic load rating (N)	Dynamic C_a	11000
	Static C_{0a}	24400
Preload (N)		540
Dynamic friction torque, median, (N·cm)		9.8
Spacer ball		Yes
Factory packed grease		**Refer to Remarks 2.**
Internal spatial volume of nut (cm³)		6.0

Unit: mm

Ball screw No.	Stroke		Screw shaft length			Left side shaft end	Lead accuracy			Shaft run-out **	Mass (Kg)	Permissible rotational speed N (min⁻¹) Supporting condition	
	Nominal	Maximum (L_1–Nut length)	L_1	L_2	L_3		T	e_p	υ_u			Fixed - Simple support	Fixed - Fixed
W2802SA-1P-C5Z5	200	214	270	300	399	Ⅱ	–0.006	0.023	0.018	0.035	2.5	2500	—
W2803SA-1P-C5Z5	300	314	370	400	499	Ⅱ	–0.009	0.025	0.020	0.040	2.9	2500	—
W2804SA-1P-C5Z5	400	414	470	500	599	Ⅱ	–0.011	0.027	0.020	0.050	3.3	2500	—
W2805SA-1P-C5Z5	450	502	558	600	733	Ⅰ	–0.014	0.030	0.023	0.060	3.8	2500	2500
W2807SA-1P-C5Z5	650	702	758	800	933	Ⅰ	–0.018	0.035	0.025	0.075	4.7	2500	2500
W2809SA-1P-C5Z5	850	902	958	1000	1133	Ⅰ	–0.024	0.040	0.027	0.090	5.6	2500	2500
W2811SA-1P-C5Z5	1050	1102	1158	1200	1333	Ⅰ	–0.028	0.046	0.030	0.120	6.5	2500	2500

Remarks 1. We recommend NSK support unit WBK20-01A (square type, fixed side), WBK20S-01 (square type, simple support side), and WBK20-11 (round type, fixed side).
2. Only rust preventive agent is applied at time of delivery. Please apply lubricant (oil or grease) before use.
3. Permissible rotational speed is determined by a d · n value and a critical speed. See page B509.
Root diameter of screw shaft (dr) is 25.2 mm.

www.bergab.ru Берг АБ bergab@ya.ru Тел. (495)-228-06-21, факс (495) 223-3071

www.bergab.ru Берг АБ bergab@ya.ru Тел. (495)-228-06-21, факс (495) 223-3071

Unit: mm

Standard stock

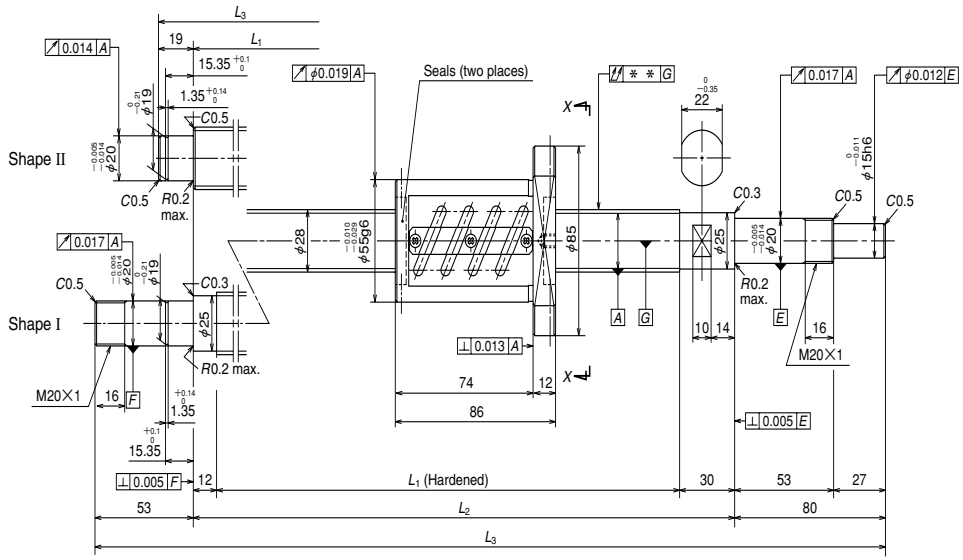

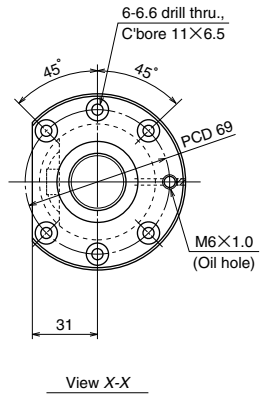

Ball screw specifications		
Shaft dia. × Lead / Direction of turn		28×5/Right
Preload / Ball recirculation		Z preload / Return tube
Ball dia. / Ball circle dia.		3.175/28.5
Effective turns of balls		2.5×2
Accuracy grade / Preload		C5/Z
Basic load rating (N)	Dynamic C_a	17400
	Static C_{0a}	48800
Preload (N)		1220
Dynamic friction torque, median, (N·cm)		21.5
Spacer ball		Yes
Factory packed grease		**Refer to Remarks 2.**
Internal spatial volume of nut (cm³)		9.0

B 110

Unit: mm

Ball screw No.	Stroke		Screw shaft length		
	Nominal	Maximum (L_1–Nut length)	L_1	L_2	L_3
W2802SA-2Z-C5Z5	150	184	270	300	399
W2803SA-2Z-C5Z5	250	284	370	400	499
W2804SA-2Z-C5Z5	350	384	470	500	599
W2805SA-2Z-C5Z5	450	472	558	600	733
W2807SA-2Z-C5Z5	650	672	758	800	933
W2809SA-2Z-C5Z5	850	872	958	1000	1133
W2811SA-2Z-C5Z5	1050	1072	1158	1200	1333

Left side shaft end	Lead accuracy			Shaft run-out **	Mass (Kg)	Permissible rotational speed N (min⁻¹) Supporting condition	
	T	e_p	υ_u			Fixed - Simple support	Fixed - Fixed
Ⅱ	–0.006	0.023	0.018	0.035	2.8	2500	—
Ⅱ	–0.009	0.025	0.020	0.040	3.2	2500	—
Ⅱ	–0.011	0.027	0.020	0.050	3.7	2500	—
Ⅰ	–0.013	0.030	0.023	0.060	4.2	2500	2500
Ⅰ	–0.018	0.035	0.025	0.075	5.1	2500	2500
Ⅰ	–0.023	0.040	0.027	0.090	5.9	2500	2500
Ⅰ	–0.028	0.046	0.030	0.120	6.8	2500	2500

Remarks 1. We recommend NSK support unit WBK20-01A (square type, fixed side), WBK20S-01 (square type, simple support side), and WBK20-11 (round type, fixed side).
2. Only rust preventive agent is applied at time of delivery. Please apply lubricant (oil or grease) before use.
3. Permissible rotational speed is determined by a d · n value and a critical speed. See page B509.
Root diameter of screw shaft (dr) is 25.2 mm.

www.bergab.ru Берг АБ bergab@ya.ru Тел. (495)-228-06-21, факс (495) 223-3071

www.bergab.ru Берг АБ bergab@ya.ru Тел. (495)-228-06-21, факс (495) 223-3071

φ28×6

Standard stock

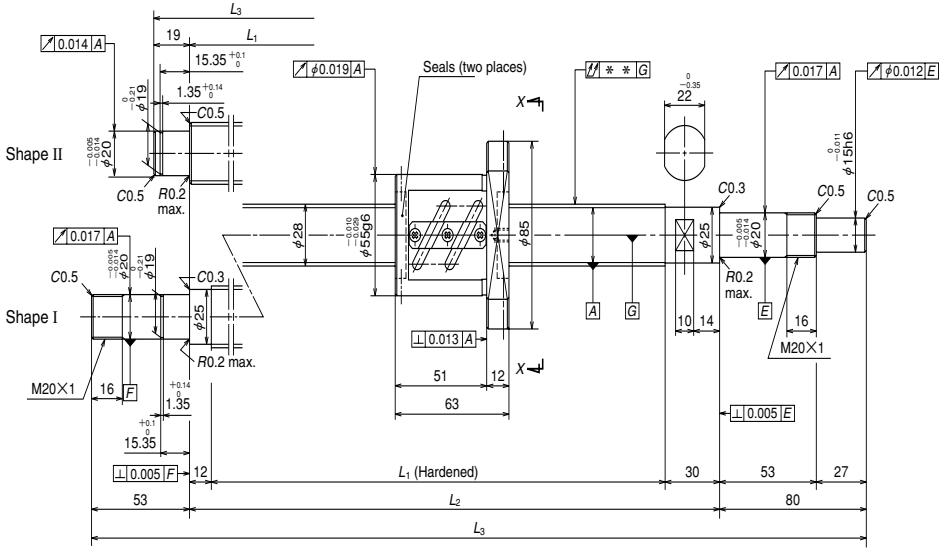

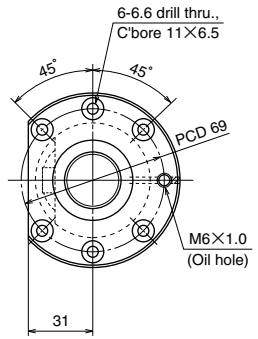

View X-X

Unit: mm

Ball screw specifications		
Shaft dia. × Lead / Direction of turn		28×6/Right
Preload / Ball recirculation		P preload / Return tube
Ball dia. / Ball circle dia.		3.175/28.5
Effective turns of balls		2.5×2
Accuracy grade / Preload		C5/Z
Basic load rating (N)	Dynamic C_a	11000
	Static C_{0a}	24400
Preload (N)		540
Dynamic friction torque, median, (N·cm)		11.8
Spacer ball		Yes
Factory packed grease		**Refer to Remarks 2.**
Internal spatial volume of nut (cm³)		6.0

Unit: mm

Ball screw No.	Stroke		Screw shaft length		
	Nominal	Maximum (L_1–Nut length)	L_1	L_2	L_3
W2803SA-3P-C5Z6	250	307	370	400	499
W2805SA-3P-C5Z6	450	507	570	600	699
W2807SA-3P-C5Z6	650	695	758	800	933
W2809SA-3P-C5Z6	850	895	958	1000	1133
W2811SA-3P-C5Z6	1050	1095	1158	1200	1333

Left side shaft end	Lead accuracy			Shaft run-out **	Mass (Kg)	Permissible rotational speed N (min⁻¹) Supporting condition	
	T	e_p	υ_u			Fixed - Simple support	Fixed - Fixed
Ⅱ	–0.009	0.025	0.020	0.040	3.0	2500	—
Ⅱ	–0.014	0.030	0.023	0.060	3.9	2500	—
Ⅰ	–0.018	0.035	0.025	0.075	4.9	2500	2500
Ⅰ	–0.023	0.040	0.027	0.090	5.8	2500	2500
Ⅰ	–0.028	0.046	0.030	0.120	6.6	2500	2500

Remarks 1. We recommend NSK support unit WBK20-01A (square type, fixed side), WBK20S-01 (square type, simple support side), and WBK20-11 (round type, fixed side).
2. Only rust preventive agent is applied at time of delivery. Please apply lubricant (oil or grease) before use.
3. Permissible rotational speed is determined by a d · n value and a critical speed. See page B509.
Root diameter of screw shaft (dr) is 25.2 mm.

www.bergab.ru Берг АБ bergab@ya.ru Тел. (495)-228-06-21, факс (495) 223-3071

www.bergab.ru Берг АБ bergab@ya.ru Тел. (495)-228-06-21, факс (495) 223-3071

φ28×6

Standard stock

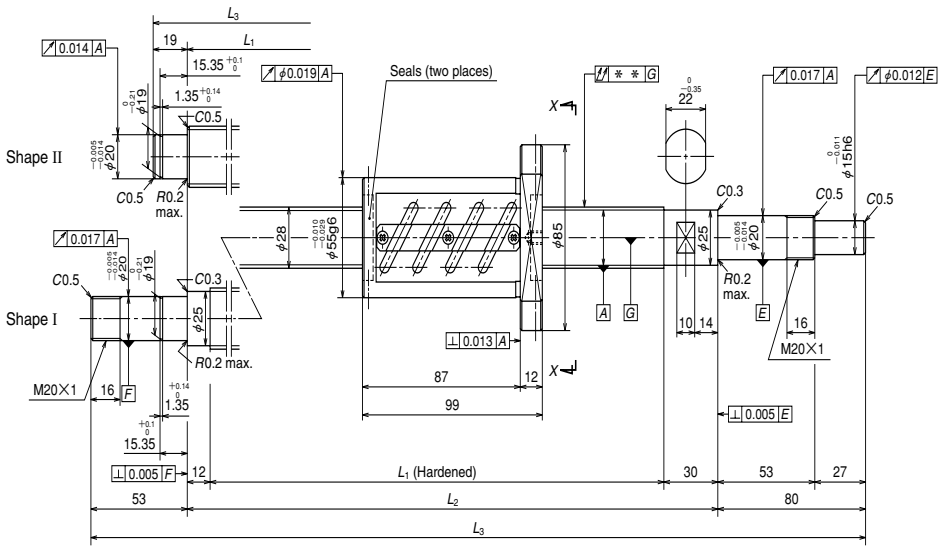

Unit: mm

Ball screw specifications		
Shaft dia. × Lead / Direction of turn		28×6/Right
Preload / Ball recirculation		Z preload / Return tube
Ball dia. / Ball circle dia.		3.175/28.5
Effective turns of balls		2.5×2
Accuracy grade / Preload		C5/Z
Basic load rating (N)	Dynamic C_a	17400
	Static C_{0a}	48800
Preload (N)		1220
Dynamic friction torque, median, (N·cm)		23.5
Spacer ball		None
Factory packed grease		**Refer to Remarks 2.**
Internal spatial volume of nut (cm³)		9.5

Unit: mm

Ball screw No.	Stroke		Screw shaft length		
	Nominal	Maximum (L_1–Nut length)	L_1	L_2	L_3
W2803SA-4Z-C5Z6	250	271	370	400	499
W2805SA-4Z-C5Z6	450	471	570	600	699
W2807SA-4Z-C5Z6	650	659	758	800	933
W2809SA-4Z-C5Z6	850	859	958	1000	1133
W2811SA-4Z-C5Z6	1050	1059	1158	1200	1333

Left side shaft end	Lead accuracy			Shaft run-out **	Mass (Kg)	Permissible rotational speed N (min⁻¹) Supporting condition	
	T	e_p	υ_u			Fixed - Simple support	Fixed - Fixed
Ⅱ	–0.009	0.025	0.020	0.040	3.4	2500	—
Ⅱ	–0.014	0.030	0.023	0.060	4.3	2500	—
Ⅰ	–0.018	0.035	0.025	0.075	5.3	2500	2500
Ⅰ	–0.023	0.040	0.027	0.090	6.2	2500	2500
Ⅰ	–0.028	0.046	0.030	0.120	7.1	2500	2500

Remarks
1. We recommend NSK support unit WBK20-01A (square type, fixed side), WBK20S-01 (square type, simple support side), and WBK20-11 (round type, fixed side).
2. **Only rust preventive agent is applied at time of delivery. Please apply lubricant (oil or grease) before use.**
3. Permissible rotational speed is determined by a d · n value and a critical speed. See page B509.
Root diameter of screw shaft (dr) is 25.2 mm.

www.bergab.ru Берг АБ bergab@ya.ru Тел. (495)-228-06-21, факс (495) 223-3071

www.bergab.ru Берг АБ bergab@ya.ru Тел. (495)-228-06-21, факс (495) 223-3071

φ32×5

Standard stock

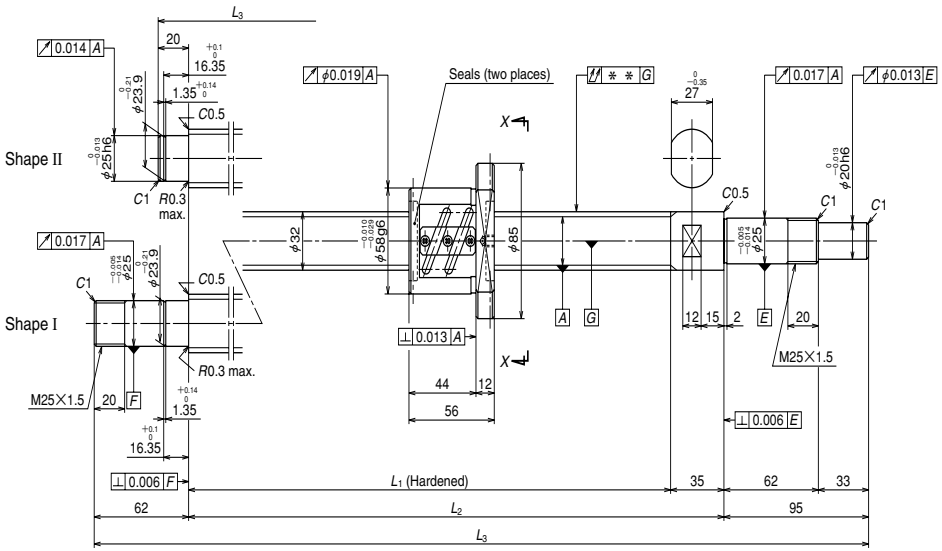

Unit: mm

Ball screw specifications		
Shaft dia. × Lead / Direction of turn		32×5/Right
Preload / Ball recirculation		P preload / Return tube
Ball dia. / Ball circle dia.		3.175/32.5
Effective turns of balls		2.5×2
Accuracy grade / Preload		C5/Z
Basic load rating (N)	Dynamic C_a	11600
	Static C_{0a}	28000
Preload (N)		590
Dynamic friction torque, median, (N·cm)		11.8
Spacer ball		Yes
Factory packed grease		**Refer to Remarks 2.**
Internal spatial volume of nut (cm³)		7.0

Unit: mm

Ball screw No.	Stroke		Screw shaft length			Left side shaft end	Lead accuracy			Shaft run-out **	Mass (Kg)	Permissible rotational speed N (min⁻¹) Supporting condition	
	Nominal	Maximum (L_1–Nut length)	L_1	L_2	L_3		T	e_p	υ_u			Fixed - Simple support	Fixed - Fixed
W3202SA-1P-C5Z5	150	209	265	300	415	Ⅱ	–0.006	0.023	0.018	0.040	3.1	2180	—
W3203SA-1P-C5Z5	250	309	365	400	515	Ⅱ	–0.009	0.025	0.020	0.050	3.7	2180	—
W3204SA-1P-C5Z5	350	409	465	500	615	Ⅱ	–0.011	0.027	0.020	0.050	4.2	2180	—
W3205SA-1P-C5Z5	450	509	565	600	715	Ⅱ	–0.014	0.030	0.023	0.060	4.8	2180	—
W3206SA-1P-C5Z5	550	609	665	700	857	Ⅰ	–0.016	0.035	0.025	0.075	5.6	2180	2180
W3207SA-1P-C5Z5	650	709	765	800	957	Ⅰ	–0.018	0.035	0.025	0.075	6.1	2180	2180
W3209SA-1P-C5Z5	850	909	965	1000	1157	Ⅰ	–0.023	0.040	0.027	0.090	7.3	2180	2180
W3211SA-1P-C5Z5	1050	1109	1165	1200	1357	Ⅰ	–0.028	0.046	0.030	0.120	8.5	2180	2180
W3214SA-1P-C5Z5	1350	1409	1465	1500	1657	Ⅰ	–0.035	0.054	0.035	0.150	10.2	2070	2180

Remarks 1. We recommend NSK support unit WBK25-01 (square type, fixed side), WBK25S-01 (square type, simple support side), and WBK25-11(round type, fixed side).
2. Only rust preventive agent is applied at time of delivery. Please apply lubricant (oil or grease) before use.
3. Permissible rotational speed is determined by a d · n value and a critical speed. See page B509.
Root diameter of screw shaft (dr) is 29.2 mm.

www.bergab.ru Берг АБ bergab@ya.ru Тел. (495)-228-06-21, факс (495) 223-3071

www.bergab.ru Берг АБ bergab@ya.ru Тел. (495)-228-06-21, факс (495) 223-3071

φ32×5

Standard stock

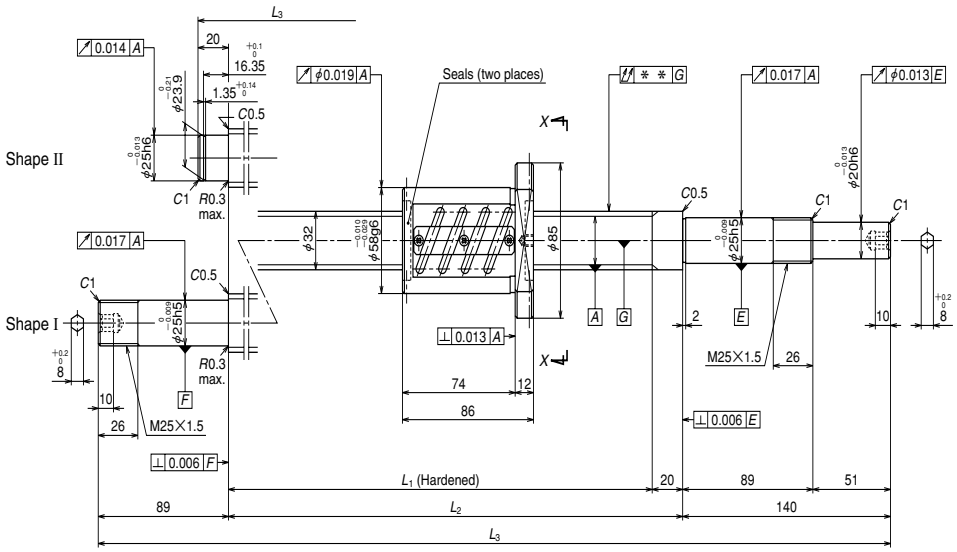

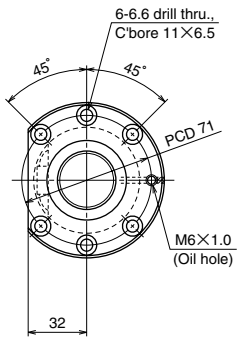

View X-X

Unit: mm

Ball screw specifications		
Shaft dia. × Lead / Direction of turn		32×5/Right
Preload / Ball recirculation		Z preload / Return tube
Ball dia. / Ball circle dia.		3.175/32.5
Effective turns of balls		2.5×2
Accuracy grade / Preload		C5/Z
Basic load rating (N)	Dynamic C_a	18500
	Static C_{0a}	56100
Preload (N)		1270
Dynamic friction torque, median, (N·cm)		23.5
Spacer ball		None
Factory packed grease		**Refer to Remarks 2.**
Internal spatial volume of nut (cm³)		10

Unit: mm

Ball screw No.	Stroke		Screw shaft length		
	Nominal	Maximum (L_1–Nut length)	L_1	L_2	L_3
W3202SA-2Z-C5Z5	150	194	280	300	460
W3203SA-2Z-C5Z5	250	294	380	400	560
W3204SA-2Z-C5Z5	350	394	480	500	660
W3205SA-2Z-C5Z5	450	494	580	600	760
W3206SA-2Z-C5Z5	550	594	680	700	929
W3207SA-2Z-C5Z5	650	694	780	800	1029
W3209SA-2Z-C5Z5	850	894	980	1000	1229
W3211SA-2Z-C5Z5	1050	1094	1180	1200	1429
W3214SA-2Z-C5Z5	1350	1394	1480	1500	1729

Unit: mm

Left side shaft end	Lead accuracy			Shaft run-out **	Mass (Kg)	Permissible rotational speed N (min⁻¹) Supporting condition	
	T	e_p	υ_u	⇅		Fixed - Simple support	Fixed - Fixed
Ⅱ	–0.007	0.023	0.018	0.040	3.5	2180	—
Ⅱ	–0.009	0.025	0.020	0.050	4.1	2180	—
Ⅱ	–0.012	0.027	0.020	0.060	4.7	2180	—
Ⅱ	–0.014	0.030	0.023	0.060	5.3	2180	—
Ⅰ	–0.016	0.035	0.025	0.075	6.1	2180	2180
Ⅰ	–0.019	0.035	0.025	0.090	6.7	2180	2180
Ⅰ	–0.024	0.040	0.027	0.090	7.9	2180	2180
Ⅰ	–0.028	0.046	0.030	0.120	9.0	2180	2180
Ⅰ	–0.036	0.054	0.035	0.150	10.8	2040	2180

Remarks 1. We recommend NSK support unit WBK25DF-31 (round type).
2. Only rust preventive agent is applied at time of delivery. Please apply lubricant (oil or grease) before use.
3. Permissible rotational speed is determined by a d · n value and a critical speed. See page B509.
Root diameter of screw shaft (dr) is 29.2 mm.

www.bergab.ru Берг АБ bergab@ya.ru Тел. (495)-228-06-21, факс (495) 223-3071

www.bergab.ru Берг АБ bergab@ya.ru Тел. (495)-228-06-21, факс (495) 223-3071

φ32×6

Standard stock

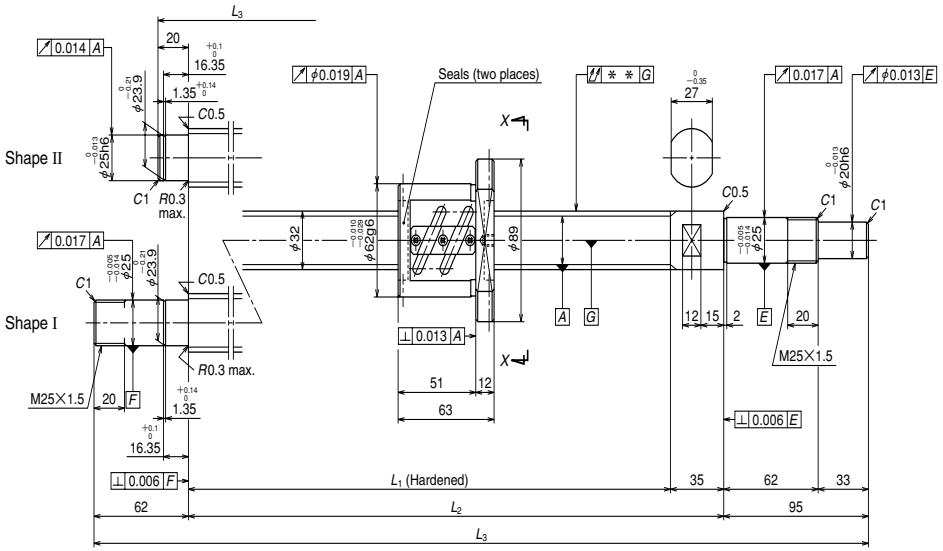

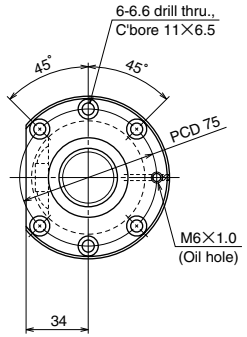

Unit: mm

Ball screw specifications		
Shaft dia. × Lead / Direction of turn		32×6/Right
Preload / Ball recirculation		P preload / Return tube
Ball dia. / Ball circle dia.		3.969/32.5
Effective turns of balls		2.5×2
Accuracy grade / Preload		C5/Z
Basic load rating (N)	Dynamic C_a	15500
	Static C_{0a}	34700
Preload (N)		780
Dynamic friction torque, median, (N·cm)		15.7
Spacer ball		Yes
Factory packed grease		**Refer to Remarks 2.**
Internal spatial volume of nut (cm³)		9.5

Unit: mm

Ball screw No.	Stroke		Screw shaft length		
	Nominal	Maximum (L_1–Nut length)	L_1	L_2	L_3
W3203SA-3P-C5Z6	250	302	365	400	515
W3205SA-3P-C5Z6	450	502	565	600	715
W3207SA-3P-C5Z6	650	702	765	800	957
W3209SA-3P-C5Z6	850	902	965	1000	1157
W3211SA-3P-C5Z6	1050	1102	1165	1200	1357
W3214SA-3P-C5Z6	1350	1402	1465	1500	1657

Left side shaft end	Lead accuracy			Shaft run-out **	Mass (Kg)	Permissible rotational speed N (min⁻¹) Supporting condition	
	T	e_p	υ_u	⫽		Fixed - Simple support	Fixed - Fixed
Ⅱ	–0.009	0.025	0.020	0.050	3.8	2180	—
Ⅱ	–0.014	0.030	0.023	0.060	5.0	2180	—
Ⅰ	–0.018	0.035	0.025	0.075	6.3	2180	2180
Ⅰ	–0.023	0.040	0.027	0.090	7.4	2180	2180
Ⅰ	–0.028	0.046	0.030	0.120	8.5	2180	2180
Ⅰ	–0.035	0.054	0.035	0.150	10.2	2020	2180

Remarks 1. We recommend NSK support unit WBK25-01 (square type, fixed side), WBK25S-01 (square type, simple support side), and WBK25-11(round type, fixed side).
2. Only rust preventive agent is applied at time of delivery. Please apply lubricant (oil or grease) before use.
3. Permissible rotational speed is determined by a d · n value and a critical speed. See page B509.
Root diameter of screw shaft (dr) is 28.4 mm.

www.bergab.ru Берг АБ bergab@ya.ru Тел. (495)-228-06-21, факс (495) 223-3071

www.bergab.ru Берг АБ bergab@ya.ru Тел. (495)-228-06-21, факс (495) 223-3071

φ32×6

Standard stock

Unit: mm

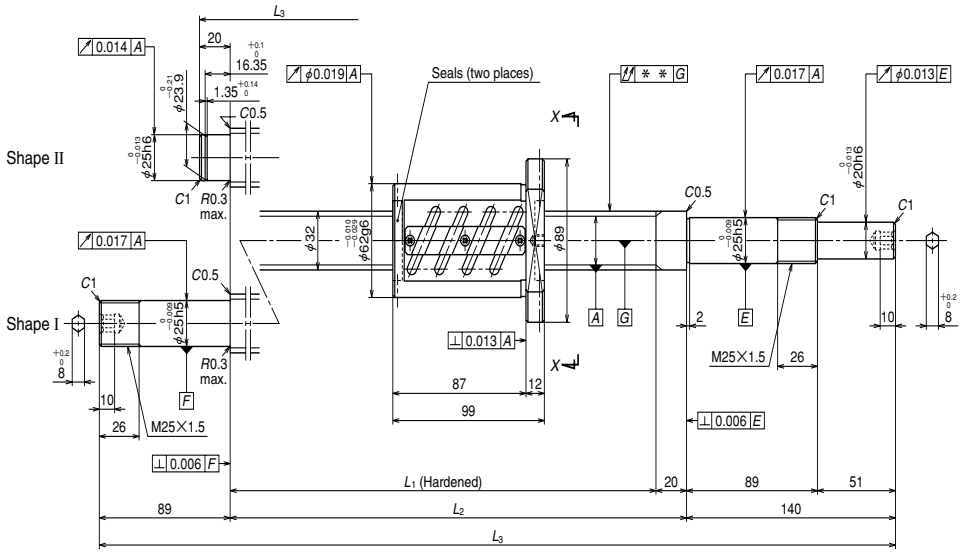

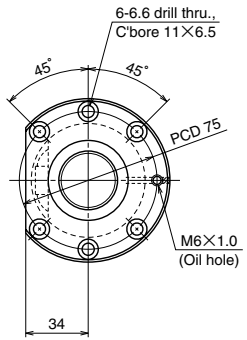

View X-X

Ball screw specifications		
Shaft dia. × Lead / Direction of turn		32×6/Right
Preload / Ball recirculation		Z preload / Return tube
Ball dia. / Ball circle dia.		3.969/32.5
Effective turns of balls		2.5×2
Accuracy grade / Preload		C5/Z
Basic load rating (N)	Dynamic C_a	24700
	Static C_{0a}	69400
Preload (N)		1710
Dynamic friction torque, median, (N·cm)		35.0
Spacer ball		None
Factory packed grease		**Refer to Remarks 2.**
Internal spatial volume of nut (cm³)		14

B 122

Unit: mm

Ball screw No.	Stroke		Screw shaft length		
	Nominal	Maximum (L_1–Nut length)	L_1	L_2	L_3
W3203SA-4Z-C5Z6	250	281	380	400	560
W3205SA-4Z-C5Z6	450	481	580	600	760
W3207SA-4Z-C5Z6	650	681	780	800	1029
W3209SA-4Z-C5Z6	850	881	980	1000	1229
W3211SA-4Z-C5Z6	1050	1081	1180	1200	1429
W3214SA-4Z-C5Z6	1350	1381	1480	1500	1729

Left side shaft end	Lead accuracy			Shaft run-out **	Mass (Kg)	Permissible rotational speed N (min⁻¹) Supporting condition	
	T	e_p	υ_u	⇅		Fixed - Simple support	Fixed - Fixed
Ⅱ	–0.009	0.025	0.020	0.050	4.5	2180	—
Ⅱ	–0.014	0.030	0.023	0.060	5.6	2180	—
Ⅰ	–0.019	0.035	0.025	0.090	7.0	2180	2180
Ⅰ	–0.024	0.040	0.027	0.090	8.1	2180	2180
Ⅰ	–0.028	0.046	0.030	0.120	9.3	2180	2180
Ⅰ	–0.036	0.054	0.035	0.150	11.0	2000	2180

Remarks 1. We recommend NSK support unit WBK25DF-31 (round type).
2. Only rust preventive agent is applied at time of delivery. Please apply lubricant (oil or grease) before use.
3. Permissible rotational speed is determined by a d · n value and a critical speed. See page B509.
Root diameter of screw shaft (dr) is 28.4 mm.

www.bergab.ru Берг АБ bergab@ya.ru Тел. (495)-228-06-21, факс (495) 223-3071

www.bergab.ru Берг АБ bergab@ya.ru Тел. (495)-228-06-21, факс (495) 223-3071

φ32×8

Standard stock

Unit: mm

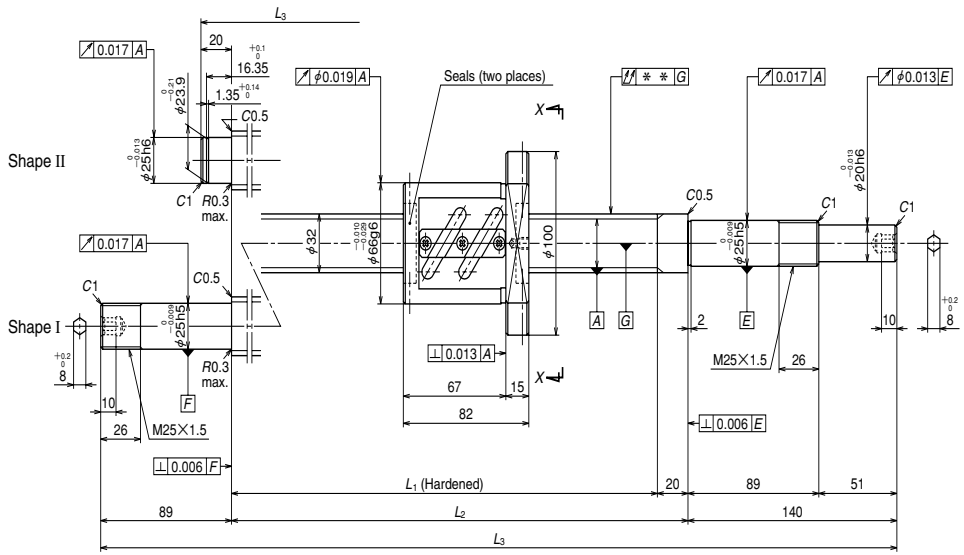

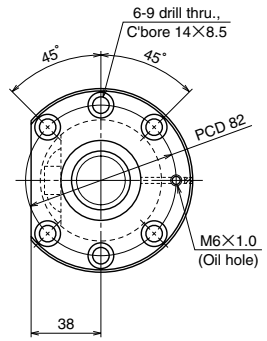

View X-X

Ball screw specifications		
Shaft dia. × Lead / Direction of turn		32×8/Right
Preload / Ball recirculation		Z preload / Return tube
Ball dia. / Ball circle dia.		4.762/32.5
Effective turns of balls		2.5×1
Accuracy grade / Preload		C5/Z
Basic load rating (N)	Dynamic C_a	17500
	Static C_{0a}	41000
Preload (N)		1320
Dynamic friction torque, median, (N·cm)		31.0
Spacer ball		None
Factory packed grease		**Refer to Remarks 2.**
Internal spatial volume of nut (cm³)		13

B 124

Unit: mm

Ball screw No.	Stroke		Screw shaft length		
	Nominal	Maximum (L_1–Nut length)	L_1	L_2	L_3
W3203SA-5Z-C5Z8	250	298	380	400	560
W3205SA-5Z-C5Z8	450	498	580	600	760
W3207SA-5Z-C5Z8	650	698	780	800	1029
W3209SA-5Z-C5Z8	850	898	980	1000	1229
W3214SA-5Z-C5Z8	1350	1398	1480	1500	1729

Left side shaft end	Lead accuracy			Shaft run-out **	Mass (Kg)	Permissible rotational speed N (min⁻¹) Supporting condition	
	T	e_p	υ_u			Fixed - Simple support	Fixed - Fixed
Ⅱ	–0.009	0.025	0.020	0.050	4.7	2180	—
Ⅱ	–0.014	0.030	0.023	0.060	5.8	2180	—
Ⅰ	–0.019	0.035	0.025	0.090	7.2	2180	2180
Ⅰ	–0.024	0.040	0.027	0.090	8.3	2180	2180
Ⅰ	–0.036	0.054	0.035	0.150	11.1	1920	2180

Remarks 1. We recommend NSK support unit WBK25DF-31 (round type).
2. Only rust preventive agent is applied at time of delivery. Please apply lubricant (oil or grease) before use.
3. Permissible rotational speed is determined by a d · n value and a critical speed. See page B509.
Root diameter of screw shaft (dr) is 25.7 mm.

www.bergab.ru Берг АБ bergab@ya.ru Тел. (495)-228-06-21, факс (495) 223-3071

www.bergab.ru Берг АБ bergab@ya.ru Тел. (495)-228-06-21, факс (495) 223-3071

φ32×10

Standard stock

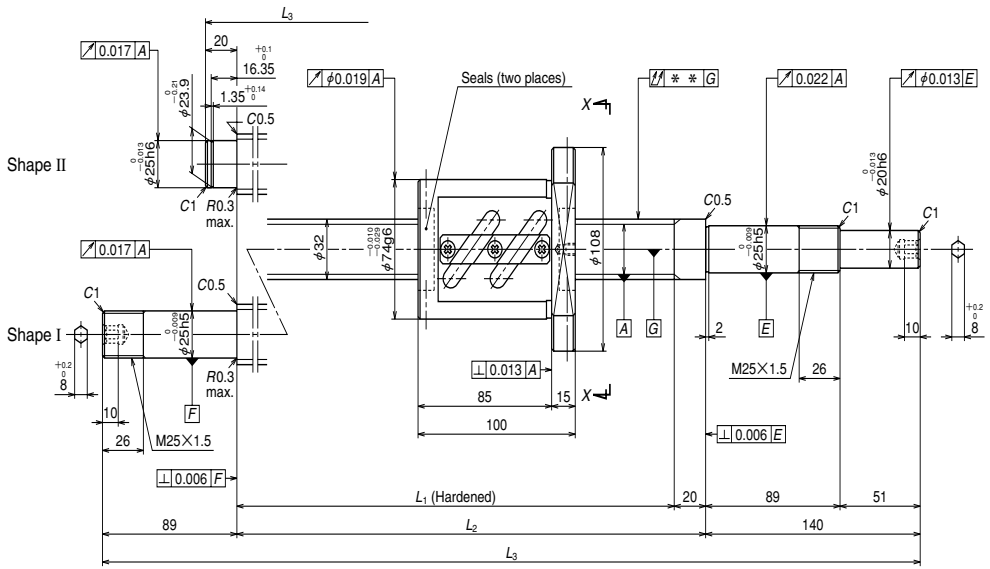

Unit: mm

Ball screw specifications		
Shaft dia. × Lead / Direction of turn		32 × 10/Right
Preload / Ball recirculation		Z preload / Return tube
Ball dia. / Ball circle dia.		6.35/33
Effective turns of balls		2.5 × 1
Accuracy grade / Preload		C5/Z
Basic load rating (N)	Dynamic C_a	25500
	Static C_{0a}	54000
Preload (N)		1960
Dynamic friction torque, median, (N·cm)		54.0
Spacer ball		None
Factory packed grease		**Refer to Remarks 2.**
Internal spatial volume of nut (cm³)		22

Unit: mm

Ball screw No.	Stroke		Screw shaft length			Left side shaft end	Lead accuracy			Shaft run-out **	Mass (Kg)	Permissible rotational speed N (min⁻¹) Supporting condition	
	Nominal	Maximum (L_1–Nut length)	L_1	L_2	L_3		T	e_p	υ_u			Fixed - Simple support	Fixed - Fixed
W3203SA-6Z-C5Z10	250	280	380	400	560	Ⅱ	–0.009	0.025	0.020	0.050	5.5	2180	—
W3204SA-3Z-C5Z10	350	380	480	500	660	Ⅱ	–0.012	0.027	0.020	0.060	6.0	2180	—
W3205SA-6Z-C5Z10	450	480	580	600	760	Ⅱ	–0.014	0.030	0.023	0.060	6.6	2180	—
W3206SA-3Z-C5Z10	550	580	680	700	929	Ⅰ	–0.016	0.035	0.025	0.075	7.4	2180	2180
W3207SA-6Z-C5Z10	650	680	780	800	1029	Ⅰ	–0.019	0.035	0.025	0.090	7.9	2180	2180
W3209SA-6Z-C5Z10	850	880	980	1000	1229	Ⅰ	–0.024	0.040	0.027	0.090	9.0	2180	2180
W3211SA-5Z-C5Z10	1050	1080	1180	1200	1429	Ⅰ	–0.028	0.046	0.030	0.120	10.1	2180	2180
W3214SA-6Z-C5Z10	1350	1380	1480	1500	1729	Ⅰ	–0.036	0.054	0.035	0.150	11.7	1860	2180
W3217SA-1Z-C5Z10	1650	1680	1780	1800	2029	Ⅰ	–0.043	0.065	0.040	0.200	13.3	1280	1820

Remarks 1. We recommend NSK support unit WBK25DF-31 (round type).
2. Only rust preventive agent is applied at time of delivery. Please apply lubricant (oil or grease) before use.
3. Permissible rotational speed is determined by a d · n value and a critical speed. See page B509.
Root diameter of screw shaft (dr) is 26.4 mm.

www.bergab.ru Берг АБ bergab@ya.ru Тел. (495)-228-06-21, факс (495) 223-3071

www.bergab.ru Берг АБ bergab@ya.ru Тел. (495)-228-06-21, факс (495) 223-3071

φ32×10

Standard stock

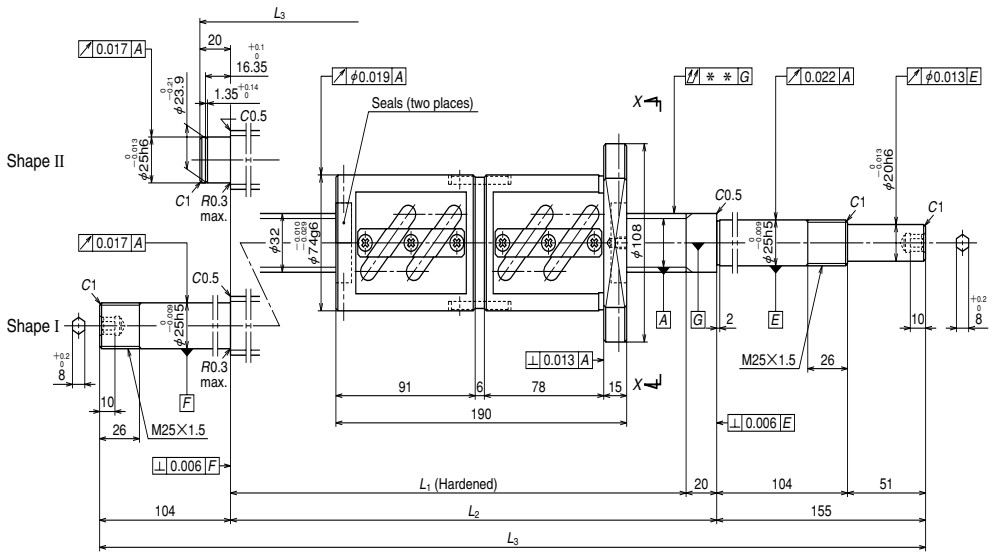

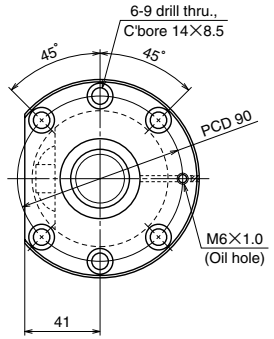

View X-X

Unit: mm

Ball screw specifications		
Shaft dia. × Lead / Direction of turn		32×10/Right
Preload / Ball recirculation		D preload / Return tube
Ball dia. / Ball circle dia.		6.35/33
Effective turns of balls		2.5×2
Accuracy grade / Preload		C5/Z
Basic load rating (N)	Dynamic C_a	46300
	Static C_{0a}	108000
Preload (N)		3230
Dynamic friction torque, median, (N·cm)		83.0
Spacer ball		None
Factory packed grease		**Refer to Remarks 2.**
Internal spatial volume of nut (cm³)		44

Unit: mm

Ball screw No.	Stroke		Screw shaft length		
	Nominal	Maximum (L_1–Nut length)	L_1	L_2	L_3
W3203SA-7D-C5Z10	150	190	380	400	575
W3204SA-4D-C5Z10	250	290	480	500	675
W3205SA-7D-C5Z10	350	390	580	600	775
W3206SA-4D-C5Z10	450	490	680	700	959
W3207SA-7D-C5Z10	550	590	780	800	1059
W3209SA-7D-C5Z10	750	790	980	1000	1259
W3211SA-6D-C5Z10	950	990	1180	1200	1459
W3214SA-7D-C5Z10	1250	1290	1480	1500	1759
W3217SA-2D-C5Z10	1550	1590	1780	1800	2059

Left side shaft end	Lead accuracy			Shaft run-out **	Mass (Kg)	Permissible rotational speed N (min⁻¹) Supporting condition	
	T	e_p	υ_u	⇅		Fixed - Simple support	Fixed - Fixed
Ⅱ	–0.009	0.025	0.020	0.050	7.5	2180	—
Ⅱ	–0.012	0.027	0.020	0.060	8.1	2180	—
Ⅱ	–0.014	0.030	0.023	0.060	8.6	2180	—
Ⅰ	–0.016	0.035	0.025	0.075	9.5	2180	2180
Ⅰ	–0.019	0.035	0.025	0.090	10.0	2180	2180
Ⅰ	–0.024	0.040	0.027	0.120	11.1	2180	2180
Ⅰ	–0.028	0.046	0.030	0.120	12.2	2180	2180
Ⅰ	–0.036	0.054	0.035	0.150	13.8	1980	2180
Ⅰ	–0.043	0.065	0.040	0.200	15.4	1350	1910

Remarks 1. We recommend NSK support unit WBK25DF-31 (round type).
2. Only rust preventive agent is applied at time of delivery. Please apply lubricant (oil or grease) before use.
3. Permissible rotational speed is determined by a d · n value and a critical speed. See page B509.
Root diameter of screw shaft (dr) is 26.4 mm.

www.bergab.ru Берг АБ bergab@ya.ru Тел. (495)-228-06-21, факс (495) 223-3071

www.bergab.ru Берг АБ bergab@ya.ru Тел. (495)-228-06-21, факс (495) 223-3071

φ32×25

Standard stock

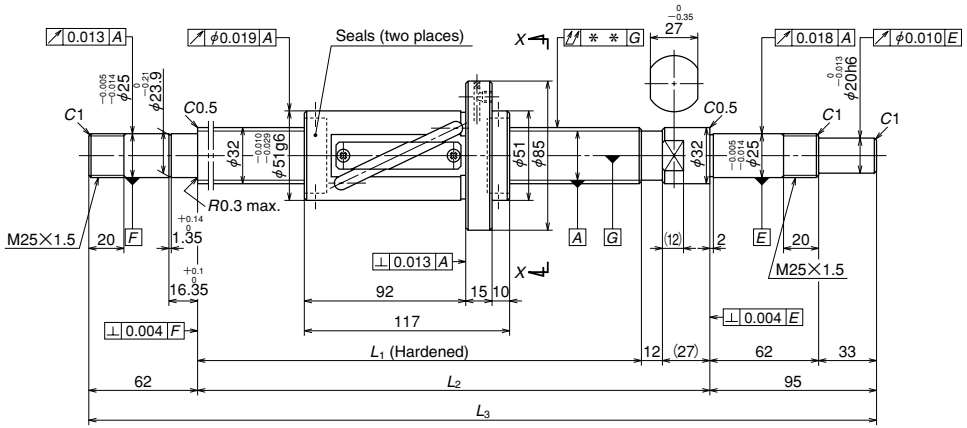

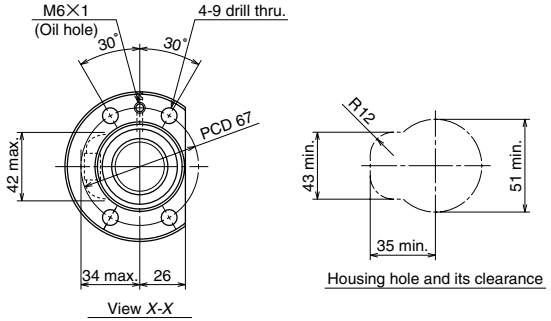

Unit: mm

Ball screw specifications			
Product classification		Preloaded	Precise clearance
Shaft dia. × Lead / Direction of turn		32×25/Right	
Preload / Ball recirculation		P preload / Return tube	
Ball dia. / Ball circle dia.		4.762/33.25	
Effective turns of balls		2.5×1	
Accuracy grade / Axial play		C5/Z	C5/T
Basic load rating (N)	Dynamic C_a	11300	17900
	Static C_{0a}	20900	41800
Axial play		0	0.005 or less
Dynamic friction torque, (N·cm)		6.8~31.5	~7.8
Spacer ball		Yes	None
Factory packed grease		NSK grease LR3	
Internal spatial volume of nut (cm³)		17.5	

B 130

Unit: mm

Ball screw No.		Stroke		Screw shaft length			Lead accuracy			Shaft run-out **	Mass (Kg)	Permissible rotational speed N (min⁻¹) Supporting condition	
Preloaded (LPFT)	Precise clearance (LSFT)	Nominal	Maximum (L_1–Nut length)	L_1	L_2	L_3	T	e_p	υ_u			Fixed - Simple support	Fixed - Fixed
W3211FA-1P-C5Z25	**W3211FA-2-C5T25**	1000	1063	1180	1219	1376	0	0.046	0.030	0.090	9.3	2180	2180
W3216FA-1P-C5Z25	**W3216FA-2-C5T25**	1500	1563	1680	1719	1876	0	0.065	0.040	0.120	12.3	1580	2180
W3221FA-1P-C5Z25	**W3221FA-2-C5T25**	2000	2063	2180	2219	2376	0	0.077	0.046	0.160	15.4	930	1300
W3227FA-1P-C5Z25	**W3227FA-2-C5T25**	2600	2663	2780	2819	2976	0	0.093	0.054	0.200	19.1	560	800

Remarks
1. We recommend NSK support unit WBK25-01 (square type, fixed side), and WBK25S-01 (square type, simple support side), and WBK25-11 (round type, fixed side).
2. NSK grease LR3 is recommended. The amount for replenishing should be about 50% of the nut internal space capacity.
3. Permissible rotational speed is determined by a d · n value and a critical speed. See page B509.
Root diameter of screw shaft (dr) is 28.3 mm.

www.bergab.ru Берг АБ bergab@ya.ru Тел. (495)-228-06-21, факс (495) 223-3071

www.bergab.ru Берг АБ bergab@ya.ru Тел. (495)-228-06-21, факс (495) 223-3071

φ32×32

Standard stock

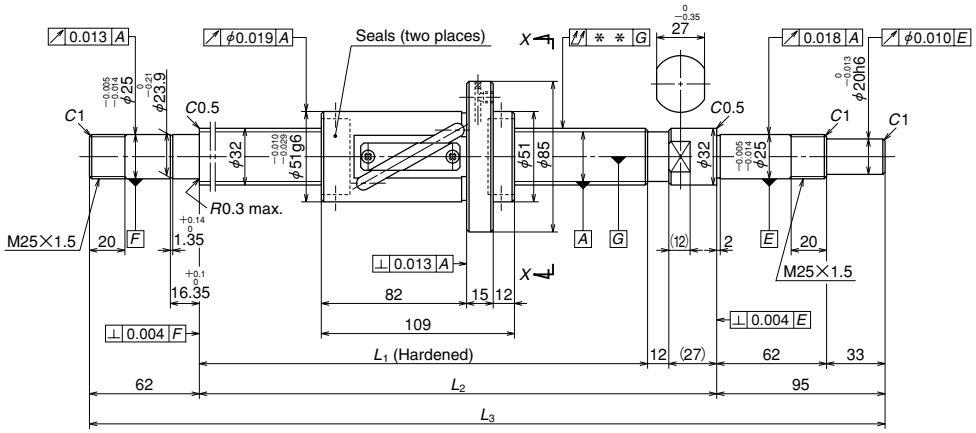

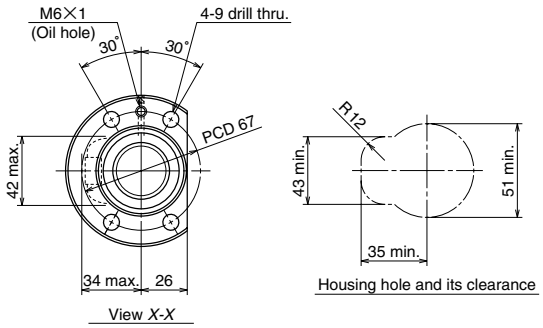

Unit: mm

Ball screw specifications			
Product classification		Preloaded	Precise clearance
Shaft dia. × Lead / Direction of turn		32×32/Right	
Preload / Ball recirculation		P preload / Return tube	
Ball dia. / Ball circle dia.		4.762/33.25	
Effective turns of balls		1.5×1	
Accuracy grade / Axial play		C5/Z	C5/T
Basic load rating (N)	Dynamic C_a	8800	11500
	Static C_{0a}	16600	24800
Axial play		0	0.005 or less
Dynamic friction torque, (N·cm)		6.9~31.5	~7.8
Spacer ball		Yes	None
Factory packed grease		NSK grease LR3	
Internal spatial volume of nut (cm³)		14	

Unit: mm

Ball screw No.		Stroke		Screw shaft length			Lead accuracy			Shaft run-out **	Mass (Kg)	Permissible rotational speed N (min⁻¹) Supporting condition	
Preloaded (LPFT)	Precise clearance (LSFT)	Nominal	Maximum (L_1–Nut length)	L_1	L_2	L_3	T	e_p	υ_u			Fixed - Simple support	Fixed - Fixed
W3211FA-3P-C5Z32	**W3211FA-4-C5T32**	1000	1071	1180	1219	1376	0	0.046	0.030	0.090	9.3	2180	2180
W3216FA-3P-C5Z32	**W3216FA-4-C5T32**	1500	1571	1680	1719	1876	0	0.065	0.040	0.120	12.3	1570	2180
W3221FA-3P-C5Z32	**W3221FA-4-C5T32**	2000	2071	2180	2219	2376	0	0.077	0.046	0.160	15.4	920	1290
W3227FA-3P-C5Z32	**W3227FA-4-C5T32**	2600	2671	2780	2819	2976	0	0.093	0.054	0.200	19.1	560	790

Remarks
1. We recommend NSK support unit WBK25-01 (square type, fixed side), and WBK25S-01 (square type, simple support side), and WBK25-11 (round type, fixed side).
2. NSK grease LR3 is recommended. The amount for replenishing should be about 50% of the nut internal space capacity.
3. Permissible rotational speed is determined by a d · n value and a critical speed. See page B509.
Root diameter of screw shaft (dr) is 28.3 mm.

www.bergab.ru Берг АБ bergab@ya.ru Тел. (495)-228-06-21, факс (495) 223-3071

www.bergab.ru Берг АБ bergab@ya.ru Тел. (495)-228-06-21, факс (495) 223-3071

φ36×10

Standard stock

Unit: mm

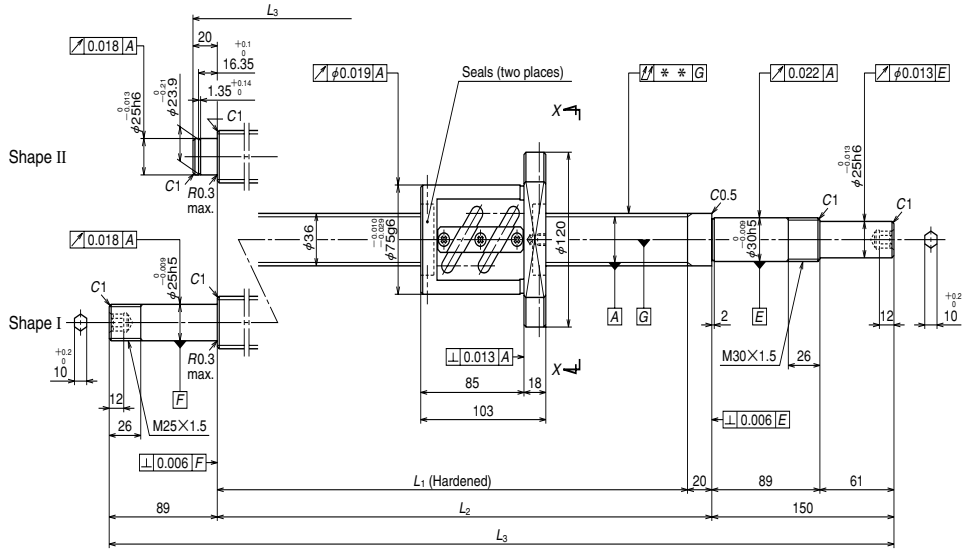

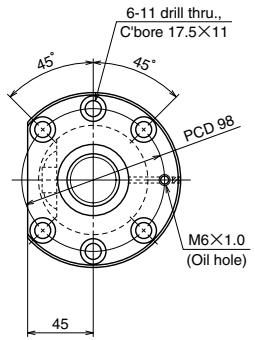

View X-X

Ball screw specifications		
Shaft dia. × Lead / Direction of turn		36×10/Right
Preload / Ball recirculation		Z preload / Return tube
Ball dia. / Ball circle dia.		6.35/37
Effective turns of balls		2.5×1
Accuracy grade / Preload		C5/Z
Basic load rating (N)	Dynamic C_a	27200
	Static C_{0a}	61300
Preload (N)		2060
Dynamic friction torque, median, (N·cm)		59.0
Spacer ball		None
Factory packed grease		**Refer to Remarks 2.**
Internal spatial volume of nut (cm³)		32

Unit: mm

Ball screw No.	Stroke		Screw shaft length		
	Nominal	Maximum (L_1–Nut length)	L_1	L_2	L_3
W3604SA-1Z-C5Z10	350	377	480	500	670
W3606SA-1Z-C5Z10	550	577	680	700	870
W3609SA-1Z-C5Z10	850	877	980	1000	1239
W3613SA-1Z-C5Z10	1250	1277	1380	1400	1639
W3617SA-1Z-C5Z10	1650	1677	1780	1800	2039

Left side shaft end	Lead accuracy			Shaft run-out **	Mass (Kg)	Permissible rotational speed N (min⁻¹) Supporting condition	
	T	e_p	υ_u			Fixed - Simple support	Fixed - Fixed
Ⅱ	–0.012	0.027	0.020	0.040	7.4	1940	—
Ⅱ	–0.016	0.035	0.025	0.050	8.8	1940	—
Ⅰ	–0.024	0.040	0.027	0.065	11.1	1940	1940
Ⅰ	–0.033	0.054	0.035	0.100	13.9	1940	1940
Ⅰ	–0.043	0.065	0.040	0.130	16.6	1480	1940

Remarks 1. We recommend NSK support unit round type WBK30DF-31 and WBK25DF-31.
2. Only rust preventive agent is applied at time of delivery. Please apply lubricant (oil or grease) before use.
3. Permissible rotational speed is determined by a d · n value and a critical speed. See page B509.
Root diameter of screw shaft (dr) is 30.4 mm.

www.bergab.ru Берг АБ bergab@ya.ru Тел. (495)-228-06-21, факс (495) 223-3071

www.bergab.ru Берг АБ bergab@ya.ru Тел. (495)-228-06-21, факс (495) 223-3071

Unit: mm

Standard stock

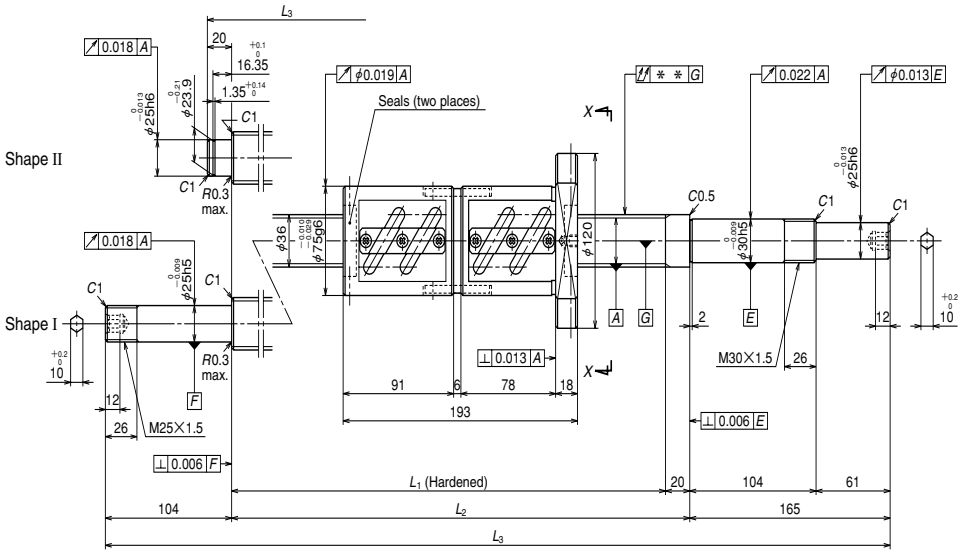

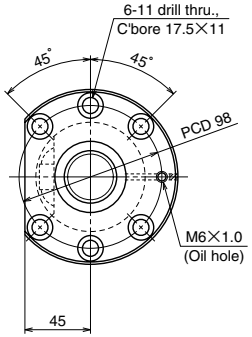

View X-X

Ball screw specifications		
Shaft dia. × Lead / Direction of turn		36×10/Right
Preload / Ball recirculation		D preload / Return tube
Ball dia. / Ball circle dia.		6.35/37
Effective turns of balls		2.5×2
Accuracy grade / Preload		C5/Z
Basic load rating (N)	Dynamic C_a	49300
	Static C_{0a}	123000
Preload (N)		3430
Dynamic friction torque, median, (N·cm)		93.0
Spacer ball		None
Factory packed grease		**Refer to Remarks 2.**
Internal spatial volume of nut (cm³)		54

Unit: mm

Ball screw No.	Stroke		Screw shaft length			Left side shaft end	Lead accuracy			Shaft run-out **	Mass (Kg)	Permissible rotational speed N (min⁻¹) Supporting condition	
	Nominal	Maximum (L_1–Nut length)	L_1	L_2	L_3		T	e_p	υ_u			Fixed - Simple support	Fixed - Fixed
W3604SA-2D-C5Z10	250	287	480	500	685	Ⅱ	–0.012	0.027	0.020	0.040	9.3	1940	—
W3606SA-2D-C5Z10	450	487	680	700	885	Ⅱ	–0.016	0.035	0.025	0.050	10.7	1940	—
W3609SA-2D-C5Z10	750	787	980	1000	1269	Ⅰ	–0.024	0.040	0.027	0.080	13.1	1940	1940
W3613SA-2D-C5Z10	1150	1187	1380	1400	1669	Ⅰ	–0.033	0.054	0.035	0.100	15.9	1940	1940
W3617SA-2D-C5Z10	1550	1587	1780	1800	2069	Ⅰ	–0.043	0.065	0.040	0.130	18.6	1540	1940

Remarks 1. We recommend NSK support unit round type WBK30DF-31 and WBK25DF-31.
2. Only rust preventive agent is applied at time of delivery. Please apply lubricant (oil or grease) before use.
3. Permissible rotational speed is determined by a d · n value and a critical speed. See page B509.
Root diameter of screw shaft (dr) is 30.4 mm.

www.bergab.ru Берг АБ bergab@ya.ru Тел. (495)-228-06-21, факс (495) 223-3071

www.bergab.ru Берг АБ bergab@ya.ru Тел. (495)-228-06-21, факс (495) 223-3071

φ40×5

Standard stock

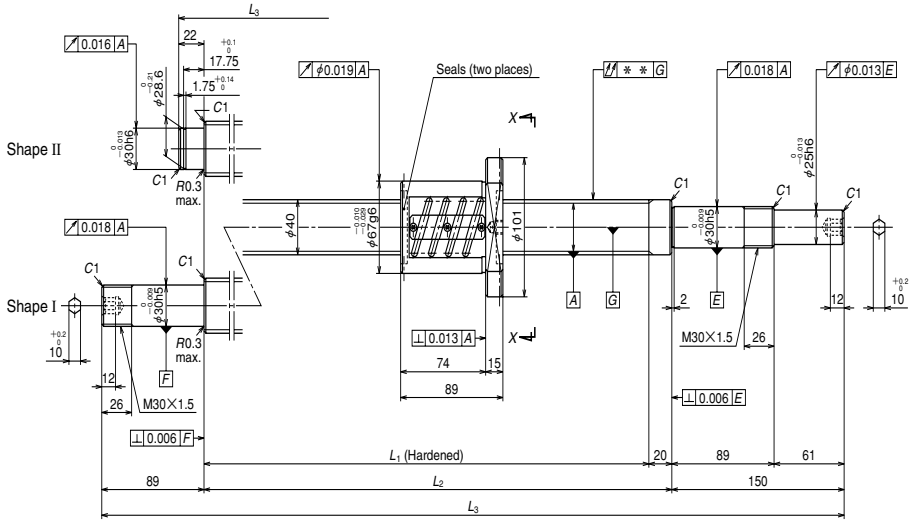

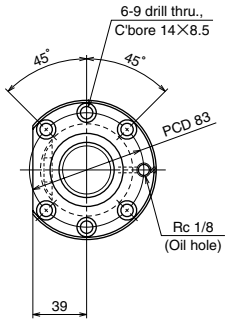

View X-X

Unit: mm

Ball screw specifications		
Shaft dia.×Lead / Direction of turn		40×5/Right
Preload / Ball recirculation		Z preload / Return tube
Ball dia. / Ball circle dia.		3.175/40.5
Effective turns of balls		2.5×2
Accuracy grade / Preload		C5/Z
Basic load rating (N)	Dynamic C_a	20200
	Static C_{0a}	70600
Preload (N)		1420
Dynamic friction torque, median, (N·cm)		29.5
Spacer ball		None
Factory packed grease		**Refer to Remarks 2.**
Internal spatial volume of nut (cm³)		14

Unit: mm

Ball screw No.	Stroke		Screw shaft length		
	Nominal	Maximum (L_1–Nut length)	L_1	L_2	L_3
W4003SA-1Z-C5Z5	250	291	380	400	572
W4005SA-1Z-C5Z5	450	491	580	600	772
W4007SA-1Z-C5Z5	650	691	780	800	1039
W4009SA-1Z-C5Z5	850	891	980	1000	1239
W4011SA-1Z-C5Z5	1050	1091	1180	1200	1439
W4015SA-1Z-C5Z5	1450	1491	1580	1600	1839

Left side shaft end	Lead accuracy			Shaft run-out **	Mass (Kg)	Permissible rotational speed N (min⁻¹) Supporting condition	
	T	e_p	υ_u			Fixed - Simple support	Fixed - Fixed
Ⅱ	–0.009	0.025	0.020	0.035	6.3	1750	—
Ⅱ	–0.014	0.030	0.023	0.040	8.1	1750	—
Ⅰ	–0.019	0.035	0.025	0.065	10.3	1750	1750
Ⅰ	–0.024	0.040	0.027	0.065	12.2	1750	1750
Ⅰ	–0.028	0.046	0.030	0.080	14.0	1750	1750
Ⅰ	–0.038	0.054	0.035	0.100	17.7	1750	1750

Remarks 1. We recommend NSK support unit round type WBK30DF-31.
2. Only rust preventive agent is applied at time of delivery. Please apply lubricant (oil or grease) before use.
3. Permissible rotational speed is determined by a d · n value and a critical speed. See page B509.
Root diameter of screw shaft (dr) is 37.2 mm.

www.bergab.ru Берг АБ bergab@ya.ru Тел. (495)-228-06-21, факс (495) 223-3071

www.bergab.ru Берг АБ bergab@ya.ru Тел. (495)-228-06-21, факс (495) 223-3071

φ40×8

Standard stock

Unit: mm

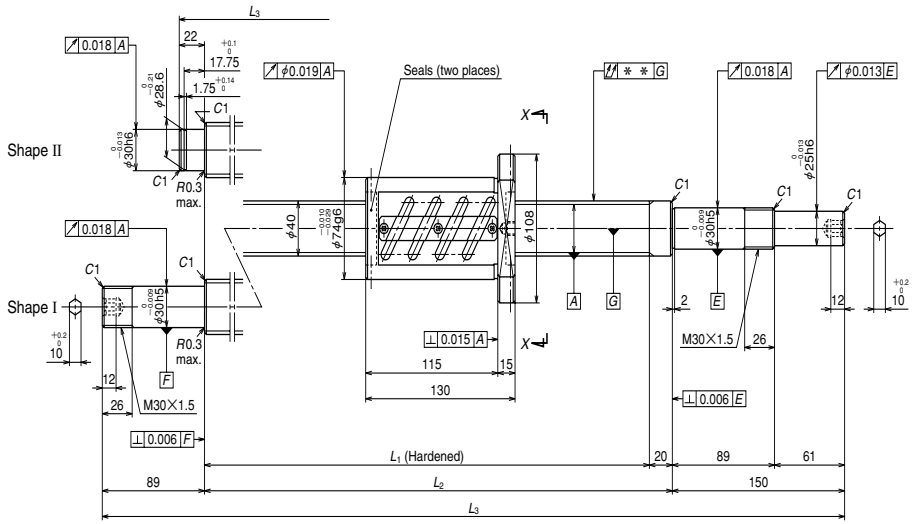

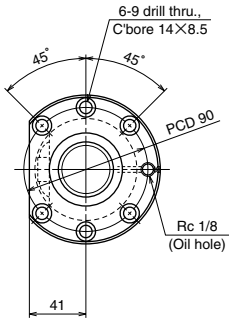

View X-X

Ball screw specifications		
Shaft dia. × Lead / Direction of turn		40×8/Right
Preload / Ball recirculation		Z preload / Return tube
Ball dia. / Ball circle dia.		4.762/40.5
Effective turns of balls		2.5×2
Accuracy grade / Preload		C5/Z
Basic load rating (N)	Dynamic C_a	34900
	Static C_{0a}	103000
Preload (N)		2450
Dynamic friction torque, median, (N·cm)		64.0
Spacer ball		None
Factory packed grease		**Refer to Remarks 2.**
Internal spatial volume of nut (cm³)		27

Unit: mm

Ball screw No.	Stroke		Screw shaft length		
	Nominal	Maximum (L_1–Nut length)	L_1	L_2	L_3
W4003SA-2Z-C5Z8	200	250	380	400	572
W4005SA-2Z-C5Z8	400	450	580	600	772
W4007SA-2Z-C5Z8	600	650	780	800	1039
W4009SA-2Z-C5Z8	800	850	980	1000	1239
W4011SA-2Z-C5Z8	1000	1050	1180	1200	1439
W4015SA-2Z-C5Z8	1400	1450	1580	1600	1839

Unit: mm

Left side shaft end	Lead accuracy			Shaft run-out **	Mass (Kg)	Permissible rotational speed N (min⁻¹) Supporting condition	
	T	e_p	υ_u			Fixed - Simple support	Fixed - Fixed
Ⅱ	–0.009	0.025	0.020	0.035	7.4	1750	—
Ⅱ	–0.014	0.030	0.023	0.040	9.2	1750	—
Ⅰ	–0.019	0.035	0.025	0.065	11.3	1750	1750
Ⅰ	–0.024	0.040	0.027	0.065	13.1	1750	1750
Ⅰ	–0.028	0.046	0.030	0.080	14.9	1750	1750
Ⅰ	–0.038	0.054	0.035	0.100	18.5	1750	1750

Remarks 1. We recommend NSK support unit round type WBK30DF-31.
2. Only rust preventive agent is applied at time of delivery. Please apply lubricant (oil or grease) before use.
3. Permissible rotational speed is determined by a d · n value and a critical speed. See page B509.
Root diameter of screw shaft (dr) is 35.5 mm.

www.bergab.ru Берг АБ bergab@ya.ru Тел. (495)-228-06-21, факс (495) 223-3071

www.bergab.ru Берг АБ bergab@ya.ru Тел. (495)-228-06-21, факс (495) 223-3071

φ40×10

Standard stock

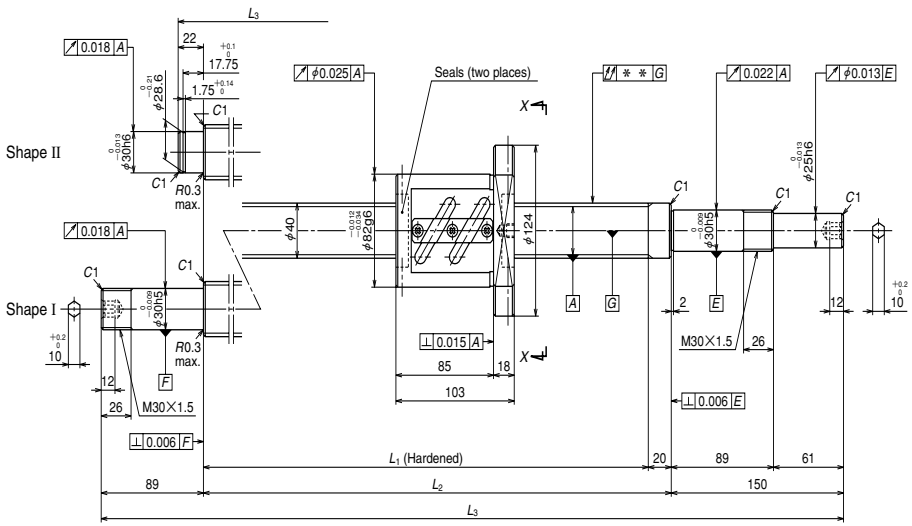

Unit: mm

Ball screw specifications		
Shaft dia.×Lead / Direction of turn		40×10/Right
Preload / Ball recirculation		Z preload / Return tube
Ball dia. / Ball circle dia.		6.35/41
Effective turns of balls		2.5×1
Accuracy grade / Preload		C5/Z
Basic load rating (N)	Dynamic C_a	28600
	Static C_{0a}	68600
Preload (N)		2160
Dynamic friction torque, median, (N·cm)		64.0
Spacer ball		None
Factory packed grease		**Refer to Remarks 2.**
Internal spatial volume of nut (cm³)		30

Unit: mm

Ball screw No.	Stroke		Screw shaft length		
	Nominal	Maximum (L_1–Nut length)	L_1	L_2	L_3
W4004SA-1Z-C5Z10	350	377	480	500	672
W4005SA-3Z-C5Z10	450	477	580	600	772
W4006SA-1Z-C5Z10	550	577	680	700	872
W4007SA-3Z-C5Z10	650	677	780	800	1039
W4009SA-3Z-C5Z10	850	877	980	1000	1239
W4011SA-3Z-C5Z10	1050	1077	1180	1200	1439
W4013SA-1Z-C5Z10	1250	1277	1380	1400	1639
W4015SA-3Z-C5Z10	1450	1477	1580	1600	1839
W4017SA-1Z-C5Z10	1650	1677	1780	1800	2039
W4023SA-1Z-C5Z10	2250	2277	2380	2400	2639

Left side shaft end	Lead accuracy			Shaft run-out **	Mass (Kg)	Permissible rotational speed N (min⁻¹) Supporting condition	
	T	e_p	υ_u			Fixed - Simple support	Fixed - Fixed
Ⅱ	–0.012	0.027	0.020	0.040	8.7	1750	—
Ⅱ	–0.014	0.030	0.023	0.040	9.6	1750	—
Ⅱ	–0.016	0.035	0.025	0.050	10.4	1750	—
Ⅰ	–0.019	0.035	0.025	0.065	11.7	1750	1750
Ⅰ	–0.024	0.040	0.027	0.065	13.4	1750	1750
Ⅰ	–0.028	0.046	0.030	0.080	15.1	1750	1750
Ⅰ	–0.033	0.054	0.035	0.100	16.9	1750	1750
Ⅰ	–0.038	0.054	0.035	0.100	18.6	1750	1750
Ⅰ	–0.043	0.065	0.040	0.130	20.3	1670	1750
Ⅰ	–0.057	0.077	0.046	0.170	25.5	930	1320

Remarks 1. We recommend NSK support unit round type WBK30DF-31.
2. Only rust preventive agent is applied at time of delivery. Please apply lubricant (oil or grease) before use.
3. Permissible rotational speed is determined by a d · n value and a critical speed. See page B509.
Root diameter of screw shaft (dr) is 34.4 mm.

www.bergab.ru Берг АБ bergab@ya.ru Тел. (495)-228-06-21, факс (495) 223-3071

www.bergab.ru Берг АБ bergab@ya.ru Тел. (495)-228-06-21, факс (495) 223-3071

φ40×10

Standard stock

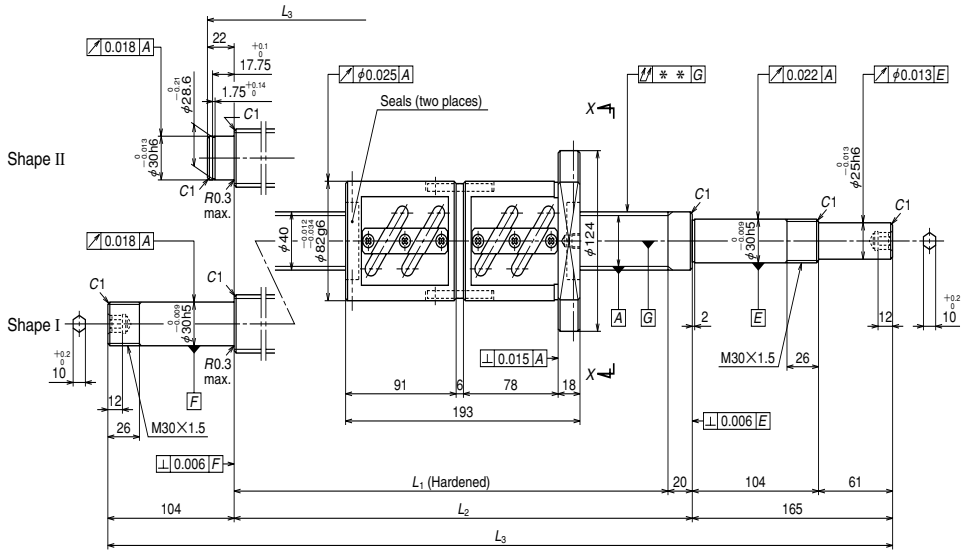

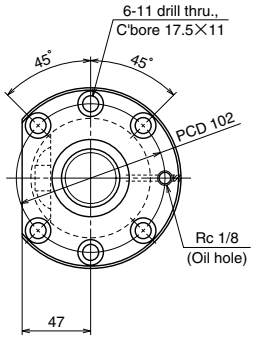

View X-X

Unit: mm

Ball screw specifications		
Shaft dia.×Lead / Direction of turn		40×10/Right
Preload / Ball recirculation		D preload / Return tube
Ball dia. / Ball circle dia.		6.35/41
Effective turns of balls		2.5×2
Accuracy grade / Preload		C5/Z
Basic load rating (N)	Dynamic C_a	52000
	Static C_{0a}	137000
Preload (N)		3630
Dynamic friction torque, median, (N·cm)		108
Spacer ball		None
Factory packed grease		**Refer to Remarks 2.**
Internal spatial volume of nut (cm³)		59

Unit: mm

Ball screw No.	Stroke		Screw shaft length		
	Nominal	Maximum (L_1–Nut length)	L_1	L_2	L_3
W4004SA-2D-C5Z10	250	287	480	500	687
W4005SA-4D-C5Z10	350	387	580	600	787
W4006SA-2D-C5Z10	450	487	680	700	887
W4007SA-4D-C5Z10	550	587	780	800	1069
W4009SA-4D-C5Z10	750	787	980	1000	1269
W4011SA-4D-C5Z10	950	987	1180	1200	1469
W4013SA-2D-C5Z10	1150	1187	1380	1400	1669
W4015SA-4D-C5Z10	1350	1387	1580	1600	1869
W4017SA-2D-C5Z10	1550	1587	1780	1800	2069
W4023SA-2D-C5Z10	2150	2187	2380	2400	2669

Left side shaft end	Lead accuracy			Shaft run-out **	Mass (Kg)	Permissible rotational speed N (min⁻¹) Supporting condition	
	T	e_p	υ_u	↗↗		Fixed - Simple support	Fixed - Fixed
Ⅱ	–0.012	0.027	0.020	0.040	11.0	1750	—
Ⅱ	–0.014	0.030	0.023	0.040	11.9	1750	—
Ⅱ	–0.016	0.035	0.025	0.050	12.7	1750	—
Ⅰ	–0.019	0.035	0.025	0.065	14.1	1750	1750
Ⅰ	–0.024	0.040	0.027	0.080	15.8	1750	1750
Ⅰ	–0.028	0.046	0.030	0.080	17.5	1750	1750
Ⅰ	–0.033	0.054	0.035	0.100	19.3	1750	1750
Ⅰ	–0.038	0.054	0.035	0.100	21.0	1750	1750
Ⅰ	–0.043	0.065	0.040	0.130	22.7	1750	1750
Ⅰ	–0.057	0.077	0.046	0.170	27.9	960	1370

Remarks 1. We recommend NSK support unit round type WBK30DF-31.
2. Only rust preventive agent is applied at time of delivery. Please apply lubricant (oil or grease) before use.
3. Permissible rotational speed is determined by a d · n value and a critical speed. See page B509.
Root diameter of screw shaft (dr) is 34.4 mm.

www.bergab.ru Берг АБ bergab@ya.ru Тел. (495)-228-06-21, факс (495) 223-3071

www.bergab.ru Берг АБ bergab@ya.ru Тел. (495)-228-06-21, факс (495) 223-3071

φ40×12

Standard stock

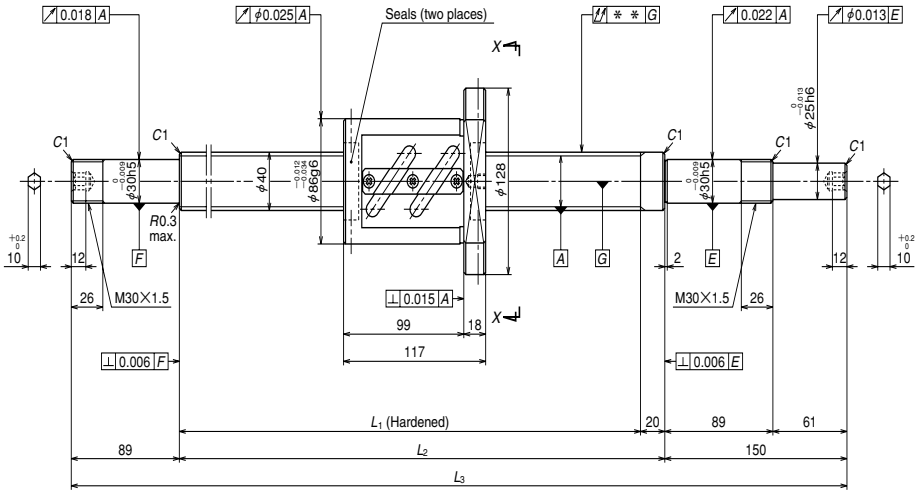

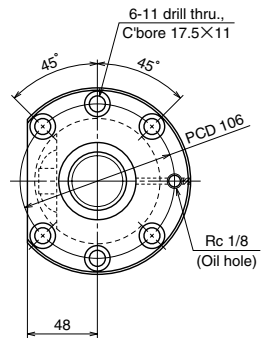

View X-X

Unit: mm

Ball screw specifications		
Shaft dia. × Lead / Direction of turn		40×12/Right
Preload / Ball recirculation		Z preload / Return tube
Ball dia. / Ball circle dia.		7.144/41.5
Effective turns of balls		2.5×1
Accuracy grade / Preload		C5/Z
Basic load rating (N)	Dynamic C_a	33600
	Static C_{0a}	77500
Preload (N)		2550
Dynamic friction torque, median, (N·cm)		83.0
Spacer ball		None
Factory packed grease		**Refer to Remarks 2.**
Internal spatial volume of nut (cm³)		33

Unit: mm

Ball screw No.	Stroke		Screw shaft length			Lead accuracy			Shaft run-out **	Mass (Kg)	Permissible rotational speed N (min⁻¹) Supporting condition	
	Nominal	Maximum (L_1–Nut length)	L_1	L_2	L_3	T	e_p	υ_u			Fixed - Simple support	Fixed - Fixed
W4006SA-3Z-C5Z12	500	563	680	700	939	–0.016	0.035	0.025	0.050	11.6	1750	1750
W4009SA-5Z-C5Z12	800	863	980	1000	1239	–0.024	0.040	0.027	0.065	14.2	1750	1750
W4013SA-3Z-C5Z12	1200	1263	1380	1400	1639	–0.033	0.054	0.035	0.100	17.7	1750	1750
W4017SA-3Z-C5Z12	1600	1663	1780	1800	2039	–0.043	0.065	0.040	0.130	21.2	1670	1750
W4024SA-1Z-C5Z12	2300	2363	2480	2500	2739	–0.060	0.077	0.046	0.170	27.2	850	1220

Remarks 1. We recommend NSK support unit round type WBK30DF-31.
2. Only rust preventive agent is applied at time of delivery. Please apply lubricant (oil or grease) before use.
3. Permissible rotational speed is determined by a d · n value and a critical speed. See page B509.
Root diameter of screw shaft (dr) is 34.1 mm.

www.bergab.ru Берг АБ bergab@ya.ru Тел. (495)-228-06-21, факс (495) 223-3071

www.bergab.ru Берг АБ bergab@ya.ru Тел. (495)-228-06-21, факс (495) 223-3071

φ40×12

Standard stock

Unit: mm

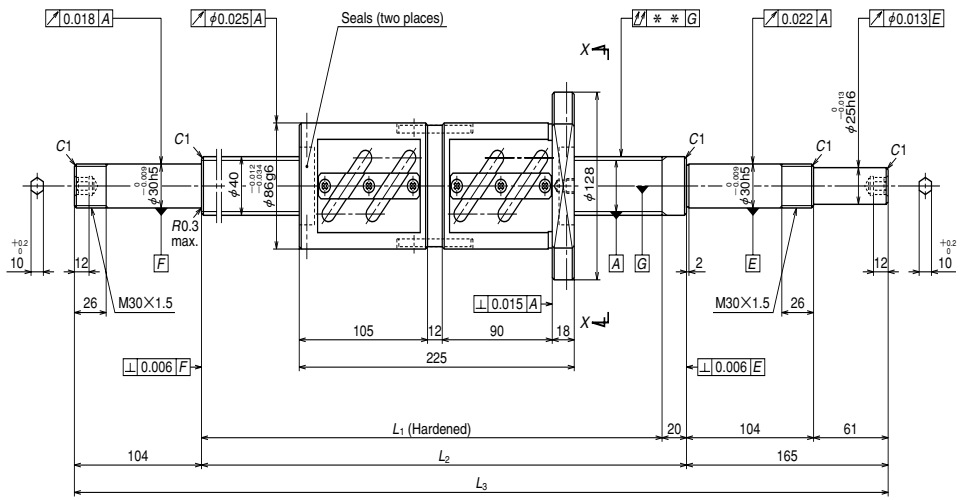

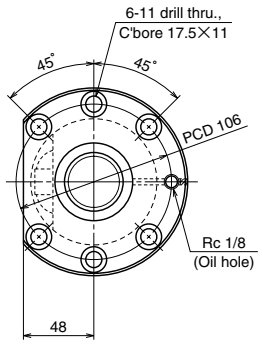

View X-X

Ball screw specifications		
Shaft dia. × Lead / Direction of turn		40×12/Right
Preload / Ball recirculation		D preload / Return tube
Ball dia. / Ball circle dia.		7.144/41.5
Effective turns of balls		2.5×2
Accuracy grade / Preload		C5/Z
Basic load rating (N)	Dynamic C_a	61000
	Static C_{0a}	155000
Preload (N)		4310
Dynamic friction torque, median, (N·cm)		137
Spacer ball		None
Factory packed grease		**Refer to Remarks 2.**
Internal spatial volume of nut (cm³)		76

Unit: mm

Ball screw No.	Stroke		Screw shaft length		
	Nominal	Maximum (L_1–Nut length)	L_1	L_2	L_3
W4006SA-4D-C5Z12	400	455	680	700	969
W4009SA-6D-C5Z12	700	755	980	1000	1269
W4013SA-4D-C5Z12	1100	1155	1380	1400	1669
W4017SA-4D-C5Z12	1500	1555	1780	1800	2069
W4024SA-2D-C5Z12	2200	2255	2480	2500	2769

Lead accuracy			Shaft run-out **	Mass (Kg)	Permissible rotational speed N (min⁻¹) Supporting condition	
T	e_p	υ_u			Fixed - Simple support	Fixed - Fixed
–0.016	0.035	0.025	0.050	14.8	1750	1750
–0.024	0.040	0.027	0.080	17.4	1750	1750
–0.033	0.054	0.035	0.100	20.9	1750	1750
–0.043	0.065	0.040	0.130	24.3	1750	1750
–0.060	0.077	0.046	0.170	30.4	880	1260

Remarks 1. We recommend NSK support unit round type WBK30DF-31.
2. Only rust preventive agent is applied at time of delivery. Please apply lubricant (oil or grease) before use.
3. Permissible rotational speed is determined by a d · n value and a critical speed. See page B509.
Root diameter of screw shaft (dr) is 34.1 mm.

www.bergab.ru Берг АБ bergab@ya.ru Тел. (495)-228-06-21, факс (495) 223-3071

www.bergab.ru Берг АБ bergab@ya.ru Тел. (495)-228-06-21, факс (495) 223-3071

φ45×10

Standard stock

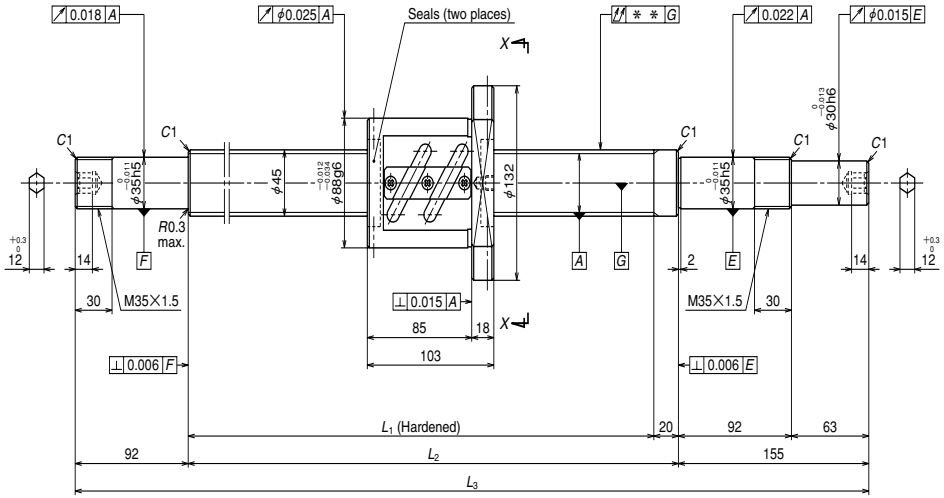

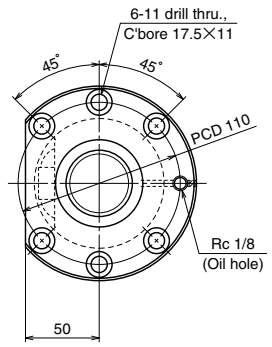

View *X-X*

Unit: mm

Ball screw specifications		
Shaft dia.×Lead / Direction of turn		45×10/Right
Preload / Ball recirculation		Z preload / Return tube
Ball dia. / Ball circle dia.		6.35/46
Effective turns of balls		2.5×1
Accuracy grade / Preload		C5/Z
Basic load rating (N)	Dynamic C_a	29900
	Static C_{0a}	77300
Preload (N)		2260
Dynamic friction torque, median, (N·cm)		69.0
Spacer ball		None
Factory packed grease		**Refer to Remarks 2.**
Internal spatial volume of nut (cm³)		33

Unit: mm

Ball screw No.	Stroke		Screw shaft length			Lead accuracy			Shaft run-out **	Mass (Kg)	Permissible rotational speed N (min⁻¹) Supporting condition	
	Nominal	Maximum (L_1–Nut length)	L_1	L_2	L_3	T	e_p	υ_u			Fixed - Simple support	Fixed - Fixed
W4506SA-1Z-C5Z10	550	577	680	700	947	–0.016	0.035	0.025	0.050	13.4	1550	1550
W4509SA-1Z-C5Z10	850	877	980	1000	1247	–0.024	0.040	0.027	0.065	16.7	1550	1550
W4513SA-1Z-C5Z10	1250	1277	1380	1400	1647	–0.033	0.054	0.035	0.100	21.2	1550	1550
W4517SA-1Z-C5Z10	1650	1677	1780	1800	2047	–0.043	0.065	0.040	0.130	25.6	1550	1550
W4524SA-1Z-C5Z10	2350	2377	2480	2500	2747	–0.060	0.077	0.046	0.170	33.4	980	1400

Remarks 1. We recommend NSK support unit round type WBK35DF-31.
2. Only rust preventive agent is applied at time of delivery. Please apply lubricant (oil or grease) before use.
3. Permissible rotational speed is determined by a d・n value and a critical speed. See page B509.
Root diameter of screw shaft (dr) is 39.4 mm.

www.bergab.ru Берг АБ bergab@ya.ru Тел. (495)-228-06-21, факс (495) 223-3071

www.bergab.ru Берг АБ bergab@ya.ru Тел. (495)-228-06-21, факс (495) 223-3071

φ50×10

Standard stock

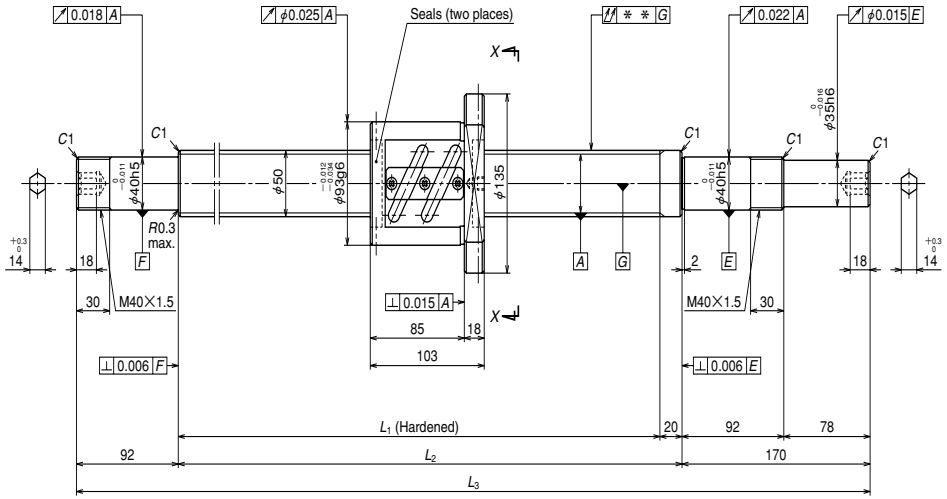

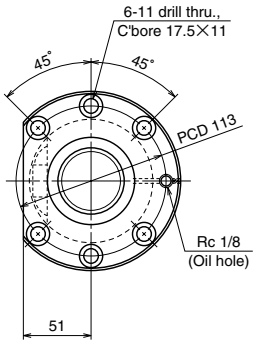

View X-X

Unit: mm

Ball screw specifications		
Shaft dia. × Lead / Direction of turn		50×10/Right
Preload / Ball recirculation		Z preload / Return tube
Ball dia. / Ball circle dia.		6.35/51
Effective turns of balls		2.5×1
Accuracy grade / Preload		C5/Z
Basic load rating (N)	Dynamic C_a	31800
	Static C_{0a}	87400
Preload (N)		2450
Dynamic friction torque, median, (N·cm)		79.0
Spacer ball		None
Factory packed grease		**Refer to Remarks 2.**
Internal spatial volume of nut (cm³)		37

Unit: mm

Ball screw No.	Stroke		Screw shaft length			Lead accuracy			Shaft run-out **	Mass (Kg)	Permissible rotational speed N (min⁻¹) Supporting condition	
	Nominal	Maximum (L_1–Nut length)	L_1	L_2	L_3	T	e_p	υ_u			Fixed - Simple support	Fixed - Fixed
W5005SA-1Z-C5Z10	450	477	580	600	862	–0.014	0.030	0.023	0.050	14.8	1400	1400
W5007SA-1Z-C5Z10	650	677	780	800	1062	–0.019	0.035	0.025	0.065	17.6	1400	1400
W5009SA-1Z-C5Z10	850	877	980	1000	1262	–0.024	0.040	0.027	0.080	20.3	1400	1400
W5011SA-1Z-C5Z10	1050	1077	1180	1200	1462	–0.028	0.046	0.030	0.080	23.1	1400	1400
W5014SA-1Z-C5Z10	1350	1377	1480	1500	1762	–0.036	0.054	0.035	0.100	27.3	1400	1400
W5019SA-1Z-C5Z10	1850	1877	1980	2000	2262	–0.048	0.065	0.040	0.130	34.2	1400	1400
W5025SA-1Z-C5Z10	2450	2477	2580	2600	2862	–0.062	0.093	0.054	0.170	42.5	1020	1400

Remarks 1. We recommend NSK support unit round type WBK40DF-31.
2. Only rust preventive agent is applied at time of delivery. Please apply lubricant (oil or grease) before use.
3. Permissible rotational speed is determined by a d · n value and a critical speed. See page B509.
Root diameter of screw shaft (dr) is 44.4 mm.

www.bergab.ru Берг АБ bergab@ya.ru Тел. (495)-228-06-21, факс (495) 223-3071

www.bergab.ru Берг АБ bergab@ya.ru Тел. (495)-228-06-21, факс (495) 223-3071

φ50×10

Standard stock

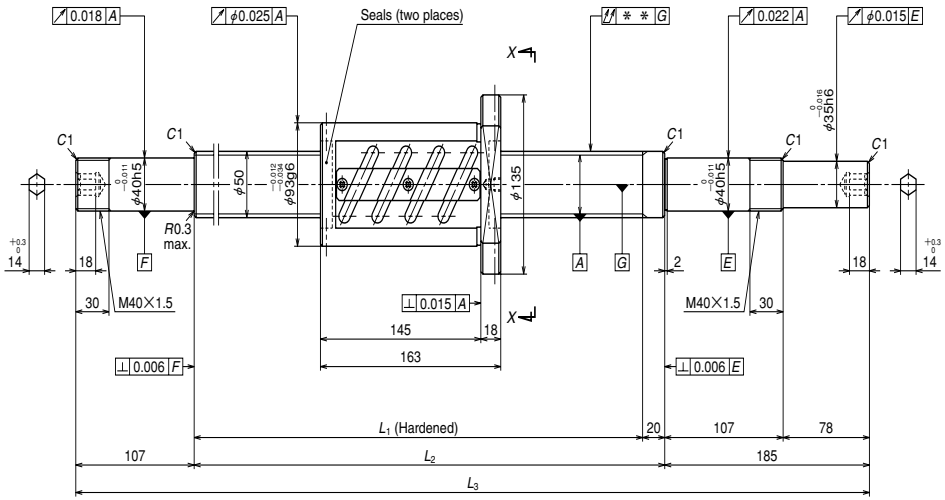

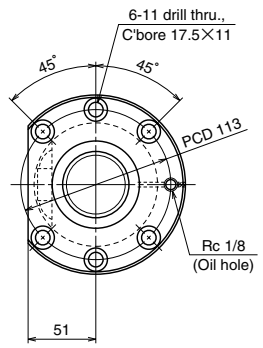

View X-X

Unit: mm

Ball screw specifications		
Shaft dia.×Lead / Direction of turn		50×10/Right
Preload / Ball recirculation		Z preload / Return tube
Ball dia. / Ball circle dia.		6.35/51
Effective turns of balls		2.5×2
Accuracy grade / Preload		C5/Z
Basic load rating (N)	Dynamic C_a	57700
	Static C_{0a}	175000
Preload (N)		4020
Dynamic friction torque, median, (N·cm)		137
Spacer ball		None
Factory packed grease		**Refer to Remarks 2.**
Internal spatial volume of nut (cm³)		59

Unit: mm

Ball screw No.	Stroke		Screw shaft length			Lead accuracy			Shaft run-out **	Mass (Kg)	Permissible rotational speed N (min⁻¹) Supporting condition	
	Nominal	Maximum (L_1–Nut length)	L_1	L_2	L_3	T	e_p	υ_u			Fixed - Simple support	Fixed - Fixed
W5005SA-2Z-C5Z10	350	417	580	600	892	–0.014	0.030	0.023	0.050	16.8	1400	1400
W5007SA-2Z-C5Z10	550	617	780	800	1092	–0.019	0.035	0.025	0.065	19.6	1400	1400
W5009SA-2Z-C5Z10	750	817	980	1000	1292	–0.024	0.040	0.027	0.080	22.3	1400	1400
W5011SA-2Z-C5Z10	950	1017	1180	1200	1492	–0.028	0.046	0.030	0.080	25.1	1400	1400
W5014SA-2Z-C5Z10	1250	1317	1480	1500	1792	–0.036	0.054	0.035	0.100	29.3	1400	1400
W5019SA-2Z-C5Z10	1750	1817	1980	2000	2292	–0.048	0.065	0.040	0.130	36.2	1400	1400
W5025SA-2Z-C5Z10	2350	2417	2580	2600	2892	–0.062	0.093	0.054	0.170	44.6	1040	1400

Remarks 1. We recommend NSK support unit round type WBK40DFD-31.
2. Only rust preventive agent is applied at time of delivery. Please apply lubricant (oil or grease) before use.
3. Permissible rotational speed is determined by a d · n value and a critical speed. See page B509.
Root diameter of screw shaft (dr) is 44.4 mm.

www.bergab.ru Берг АБ bergab@ya.ru Тел. (495)-228-06-21, факс (495) 223-3071

www.bergab.ru Берг АБ bergab@ya.ru Тел. (495)-228-06-21, факс (495) 223-3071

B-I-6.2 KA Series: Ball Screws Made of Stainless Steel

◇ **Ball screw sizes are arranged in the order of the page number.**

Table begins with the smallest shaft diameter ball screw, and proceeds to larger sizes. If ball screws have the same shaft diameter, those with smaller leads appear first. Page numbers of shaft diameter and lead combinations are shown in Table I-6•2.

◇ **Dimension tables**

Dimension tables show shapes/sizes as well as specification factors of each shaft diameter/lead combination. Tables also contain data as follows:

●Stroke

Nominal stroke : A reference for your use.

Maximum stroke : The stroke limit that the nut can move. The figure is obtained by subtracting the nut length (plus some allowance) from the screw threaded length (L1).

●Lead accuracy

Lead accuracy is C3 and C5 grades.

T : Travel compensation;

e_p : Tolerance on specified travel;

v_u: Travel variation

See "Technical Description: Lead error" (Page B499) for details of the codes.

●Permissible rotational speed

d • n : Limited by the relative peripheral speed between screw shaft and nut.

Critical speed : Limited by the natural frequency of a ball screw shaft. Critical speed depends on the supporting condition of screw shaft.

Use under either, but the smaller permissible rotational speed. For details, see "Technical Description: Permissible rotational speed" (Page B509).

◇ **Material**

A martensitic stainless steel is used. A special heat treatment technology provides the ball groove section with sufficient hardness which produces high load carrying capacity and durability.

◇ **Other**

Seal of the ball screw, ball recirculating deflector, and end cap are made of synthetic resin. Consult NSK when using the ball screws under extreme environment or special environment, or using special lubricant or oil.

For special environment, refer to Pages B527 and D2.

Refer to Pages B525 and D13 for lubricants.

Table I-6•2 KA Series "Screw shaft diameter x lead" See relevant list.

Screw shaft diameter (mm) \ Lead (mm)	1	2	4	5	10	20
6	B157					
8	B159	B161				
10		B163	B165			
12		B167		B169	B171	
15					B173	B175
16		B177				
20						B179

www.bergab.ru Берг АБ bergab@ya.ru Тел. (495)-228-06-21, факс (495) 223-3071

www.bergab.ru Берг АБ bergab@ya.ru Тел. (495)-228-06-21, факс (495) 223-3071

Stainless : ϕ6×1

Unit: mm

Standard stock

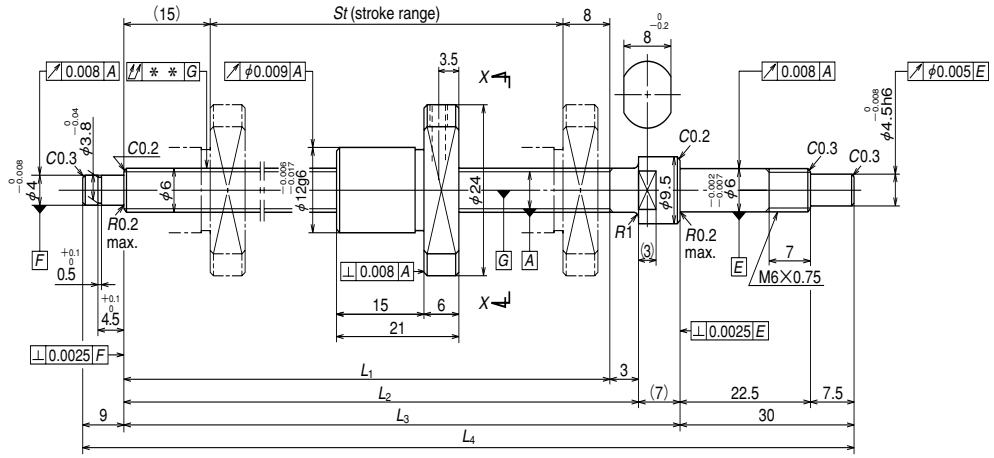

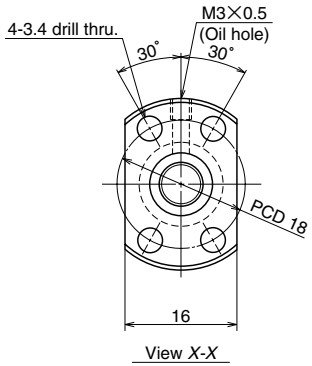

Ball screw specifications		
Shaft dia.×Lead / Direction of turn		6×1/Right
Preload / Ball recirculation		P preload / Deflector
Ball dia. / Ball circle dia.		0.800/6.2
Effective turns of balls		1×3
Accuracy grade / Preload		C3/Z
Basic load rating (N)	Dynamic C_a	470
	Static C_{0a}	680
Axial play		0
Dynamic friction torque, (N·cm)		~1.3
Spacer ball		None
Factory packed grease		**Refer to the remarks 1. below.**

Unit: mm

Ball screw No.	Stroke		Thread length				Lead accuracy			Shaft run-out **	Mass (Kg)	Permissible rotational speed N (min^{-1}) Supporting condition Fixed - Simple support
	Nominal	Maximum	L_1	L_2	L_3	L_4	T	e_p	v_u			
W0601KA-3PY-C3Z1	100	102	125	128	135	174	0	0.010	0.008	0.025	0.06	3000

Remarks **1. Only rust preventive agent is applied at time of delivery. Please apply lubricant (oil or grease) before use.** NSK Clean Grease LG2 is recommended.
2. Nut does not have a seal.
3. Permissible rotational speed is determined by a d · n value and a critical speed. See page B509. Root diameter of screw shaft (dr) is 5.2 mm.

www.bergab.ru Берг АБ bergab@ya.ru Тел. (495)-228-06-21, факс (495) 223-3071

www.bergab.ru Берг АБ bergab@ya.ru Тел. (495)-228-06-21, факс (495) 223-3071

Stainless : φ8×1

Standard stock

Unit: mm

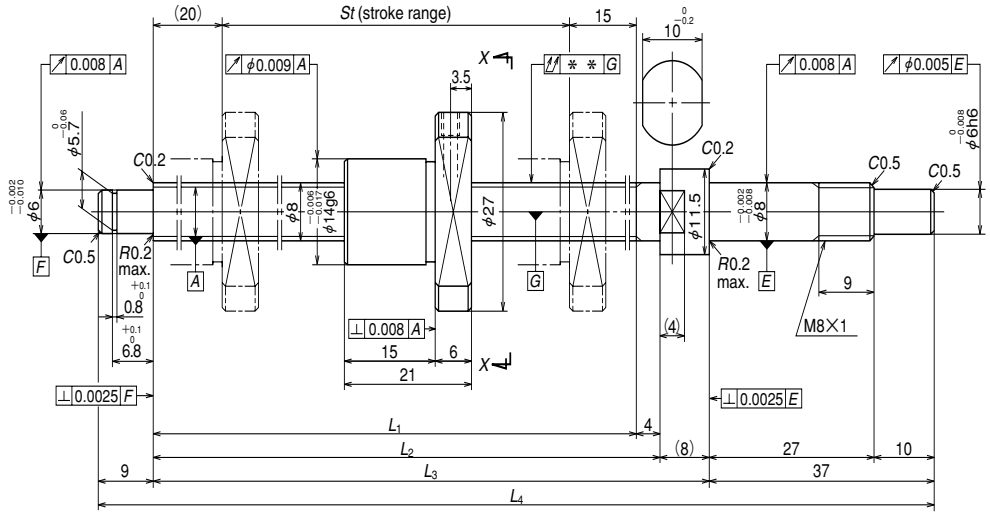

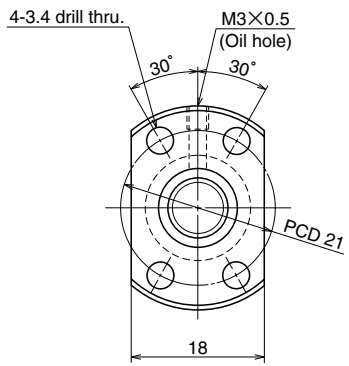

View X-X

Ball screw specifications		
Shaft dia. × Lead / Direction of turn		8×1/Right
Preload / Ball recirculation		P preload / Deflector
Ball dia. / Ball circle dia.		0.800/8.2
Effective turns of balls		1×3
Accuracy grade / Preload		C3/Z
Basic load rating (N)	Dynamic C_a	545
	Static C_{0a}	955
Axial play		0
Dynamic friction torque, (N·cm)		~1.8
Spacer ball		None
Factory packed grease		**Refer to the remarks 1. below.**

Unit: mm

Ball screw No.	Stroke		Thread length				Lead accuracy			Shaft run-out **	Mass (Kg)	Permissible rotational speed N (min^{-1}) Supporting condition Fixed - Simple support
	Nominal	Maximum	L_1	L_2	L_3	L_4	T	e_p	υ_u			
W0802KA-1PY-C3Z1	150	155	190	194	202	248	0	0.010	0.008	0.035	0.12	3000

Remarks **1. Only rust preventive agent is applied at time of delivery. Please apply lubricant (oil or grease) before use.** NSK Clean Grease LG2 is recommended.
2. Nut does not have a seal.
3. Permissible rotational speed is determined by a d · n value and a critical speed. See page B509. Root diameter of screw shaft (dr) is 7.2 mm.

www.bergab.ru Берг АБ bergab@ya.ru Тел. (495)-228-06-21, факс (495) 223-3071

www.bergab.ru Берг АБ bergab@ya.ru Тел. (495)-228-06-21, факс (495) 223-3071

Stainless : φ8×2

Unit: mm

Standard stock

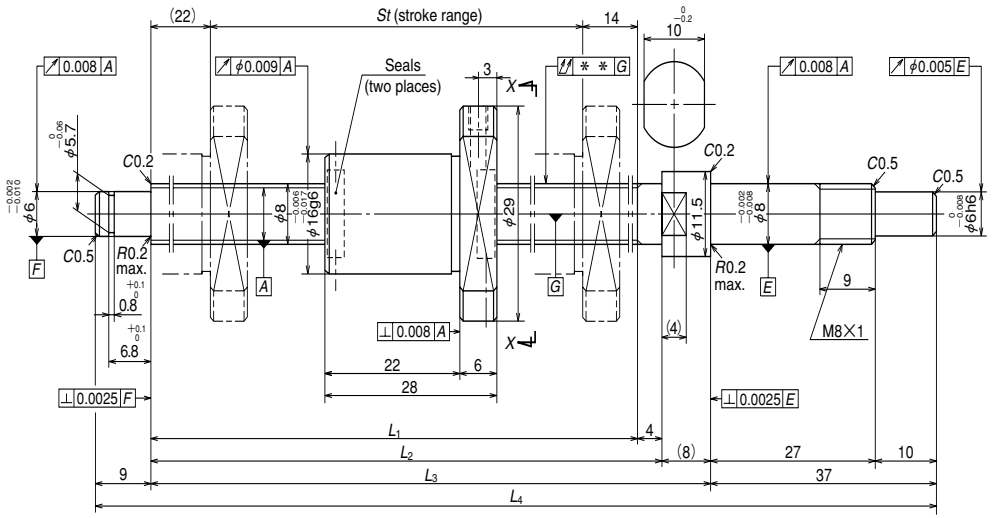

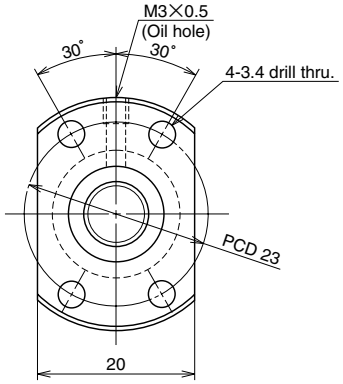

View X-X

Ball screw specifications		
Shaft dia. × Lead / Direction of turn		8×2/Right
Preload / Ball recirculation		P preload / Deflector
Ball dia. / Ball circle dia.		1.200/8.3
Effective turns of balls		1×3
Accuracy grade / Preload		C3/Z
Basic load rating (N)	Dynamic C_a	1080
	Static C_{0a}	1630
Axial play		0
Dynamic friction torque, (N·cm)		~2.0
Spacer ball		None
Factory packed grease		**Refer to the remarks 1. below.**

B 162

Unit: mm

Ball screw No.	Stroke		Thread length				Lead accuracy			Shaft run-out **	Mass (Kg)	Permissible rotational speed N (min^{-1}) Supporting condition Fixed - Simple support
	Nominal	Maximum	L_1	L_2	L_3	L_4	T	e_p	v_u			
W0802KA-5PY-C3Z2	150	154	190	194	202	248	0	0.010	0.008	0.035	0.13	3000

Remarks **1. Only rust preventive agent is applied at time of delivery. Please apply lubricant (oil or grease) before use.** NSK Clean Grease LG2 is recommended.
2. Permissible rotational speed is determined by a d · n value and a critical speed. See page B509.
Root diameter of screw shaft (dr) is 6.9 mm.

www.bergab.ru Берг АБ bergab@ya.ru Тел. (495)-228-06-21, факс (495) 223-3071

www.bergab.ru Берг АБ bergab@ya.ru Тел. (495)-228-06-21, факс (495) 223-3071

Stainless : ϕ10×2

Unit: mm

Standard stock

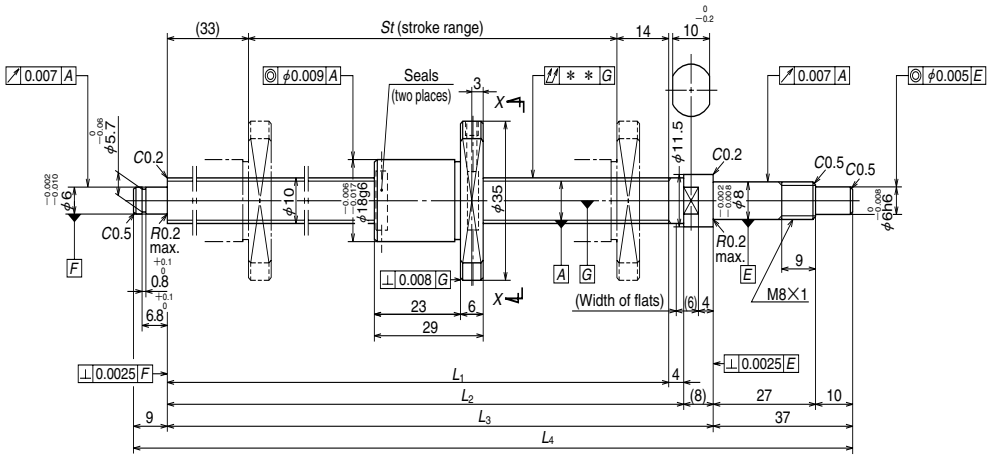

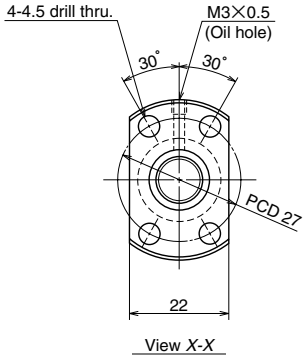

Ball screw specifications		
Shaft dia. × Lead / Direction of turn		10×2/Right
Preload / Ball recirculation		P preload / Deflector
Ball dia. / Ball circle dia.		1.200/10.3
Effective turns of balls		1×3
Accuracy grade / Preload		C3/Z
Basic load rating (N)	Dynamic C_a	1210
	Static C_{0a}	2110
Axial play		0
Dynamic friction torque, (N·cm)		0.10～2.5
Spacer ball		None
Factory packed grease		**Refer to the remarks 1. below.**

Unit: mm

Ball screw No.	Stroke		Thread length				Lead accuracy			Shaft run-out **	Mass (Kg)	Permissible rotational speed N (min^{-1}) Supporting condition Fixed - Simple support
	Nominal	Maximum	L_1	L_2	L_3	L_4	T	e_p	υ_u			
W1002KA-3PY-C3Z2	200	203	250	254	262	308	0	0.012	0.008	0.030	0.22	3000

Remarks **1. Only rust preventive agent is applied at time of delivery. Please apply lubricant (oil or grease) before use.** NSK Clean Grease LG2 is recommended.
2. Permissible rotational speed is determined by a d · n value and a critical speed. See page B509.
Root diameter of screw shaft (dr) is 8.9 mm.

www.bergab.ru Берг АБ bergab@ya.ru Тел. (495)-228-06-21, факс (495) 223-3071

www.bergab.ru Берг АБ bergab@ya.ru Тел. (495)-228-06-21, факс (495) 223-3071

Stainless : ϕ10×4

Standard stock

Unit: mm

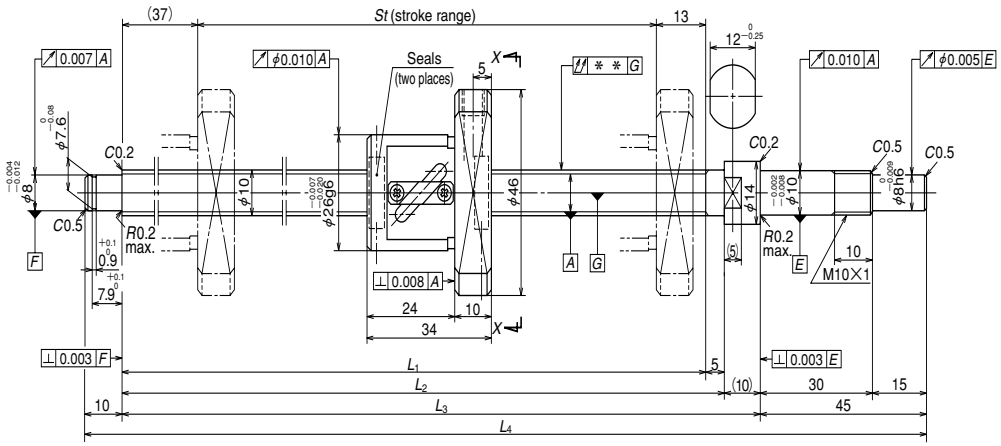

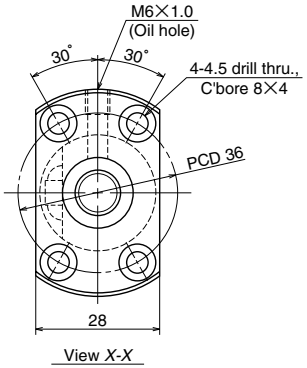

Ball screw specifications		
Shaft dia. × Lead / Direction of turn		10×4/Right
Preload / Ball recirculation		P preload / Return tube
Ball dia. / Ball circle dia.		2.000/10.3
Effective turns of balls		2.5×1
Accuracy grade / Preload		C3/Z
Basic load rating (N)	Dynamic C_a	2250
	Static C_{0a}	3290
Axial play		0
Dynamic friction torque, (N·cm)		0.5～3.9
Spacer ball		None
Factory packed grease		**Refer to the remarks 1. below.**
Internal spatial volume of nut (cm³)		0.8

B 166

Unit: mm

Ball screw No.	Stroke		Thread length				Lead accuracy			Shaft run-out **	Mass (Kg)	Permissible rotational speed N (min⁻¹) Supporting condition Fixed - Simple support
	Nominal	Maximum	L_1	L_2	L_3	L_4	T	e_p	υ_u			
W1001KA-3P-C3Z4	100	110	160	165	175	230	0	0.010	0.008	0.030	0.29	3000
W1003KA-3P-C3Z4	300	310	360	365	375	430	0	0.013	0.008	0.050	0.39	3000

Remarks **1. Only rust preventive agent is applied at time of delivery. Please apply lubricant (oil or grease) before use.** NSK Clean Grease LG2 is recommended.
2. Permissible rotational speed is determined by a d · n value and a critical speed. See page B509.
Root diameter of screw shaft (dr) is 8.2 mm.

www.bergab.ru Берг АБ bergab@ya.ru Тел. (495)-228-06-21, факс (495) 223-3071

www.bergab.ru Берг АБ bergab@ya.ru Тел. (495)-228-06-21, факс (495) 223-3071

Stainless : φ12×2

Standard stock

Unit: mm

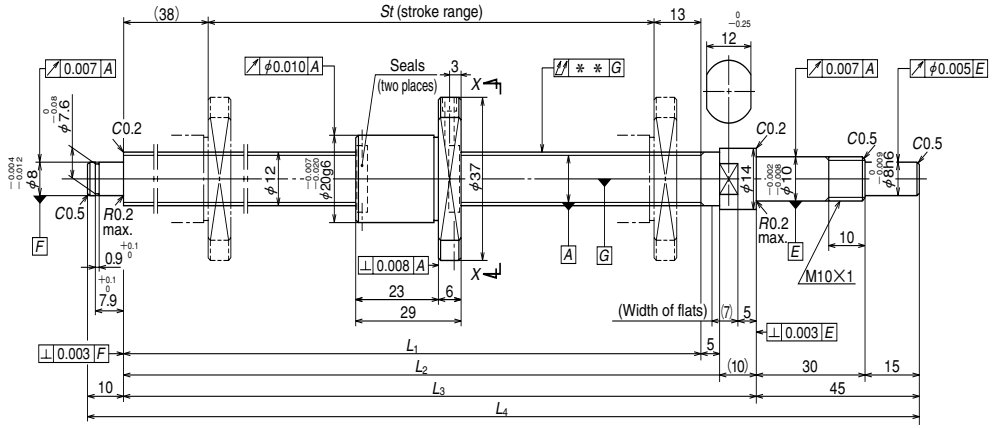

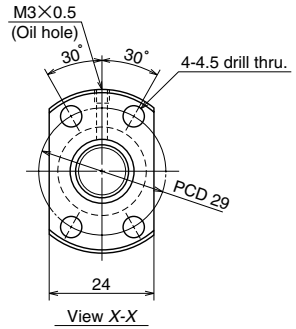

Ball screw specifications		
Shaft dia. × Lead / Direction of turn		12×2/Right
Preload / Ball recirculation		P preload / Deflector
Ball dia. / Ball circle dia.		1.200/12.3
Effective turns of balls		1×3
Accuracy grade / Preload		C3/Z
Basic load rating (N)	Dynamic C_a	1360
	Static C_{0a}	2680
Axial play		0
Dynamic friction torque, (N·cm)		0.4～3.4
Spacer ball		None
Factory packed grease		**Refer to the remarks 1. below.**

Unit: mm

Ball screw No.	Stroke		Thread length				Lead accuracy			Shaft run-out **	Mass (Kg)	Permissible rotational speed N (min^{-1}) Supporting condition Fixed - Simple support
	Nominal	Maximum	L_1	L_2	L_3	L_4	T	e_p	v_u			
W1201KA-3PY-C3Z2	100	109	160	165	175	230	0	0.010	0.008	0.030	0.24	3000
W1203KA-1PY-C3Z2	250	259	310	315	325	380	0	0.012	0.008	0.040	0.36	3000

Remarks **1. Only rust preventive agent is applied at time of delivery. Please apply lubricant (oil or grease) before use.** NSK Clean Grease LG2 is recommended.
2. Permissible rotational speed is determined by a d・n value and a critical speed. See page B509.
Root diameter of screw shaft (dr) is 10.9 mm.

www.bergab.ru Берг АБ bergab@ya.ru Тел. (495)-228-06-21, факс (495) 223-3071

www.bergab.ru Берг АБ bergab@ya.ru Тел. (495)-228-06-21, факс (495) 223-3071

Stainless : ϕ12×5

Standard stock

Unit: mm

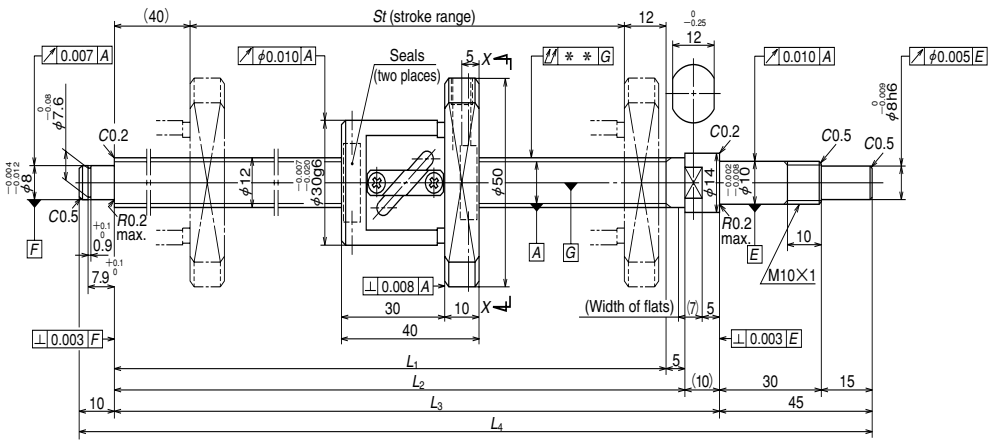

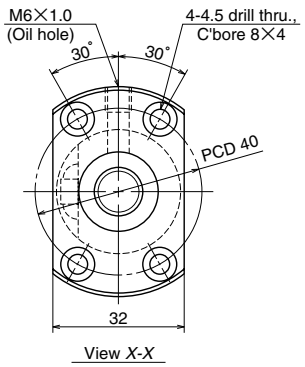

Ball screw specifications		
Shaft dia. × Lead / Direction of turn		12×5/Right
Preload / Ball recirculation		P preload / Return tube
Ball dia. / Ball circle dia.		2.381/12.3
Effective turns of balls		2.5×1
Accuracy grade / Preload		C3/Z
Basic load rating (N)	Dynamic C_a	3070
	Static C_{0a}	4670
Axial play		0
Dynamic friction torque, (N·cm)		1.0～4.4
Spacer ball		None
Factory packed grease		**Refer to the remarks 1. below.**
Internal spatial volume of nut (cm³)		1.2

B 170

Unit: mm

Ball screw No.	Stroke		Thread length				Lead accuracy			Shaft run-out **	Mass (Kg)	Permissible rotational speed N (min⁻¹) Supporting condition Fixed - Simple support
	Nominal	Maximum	L_1	L_2	L_3	L_4	T	e_p	v_u			
W1202KA-3P-C3Z5	200	208	260	265	275	330	0	0.012	0.008	0.040	0.47	3000
W1205KA-1P-C3Z5	450	458	510	515	525	580	0	0.016	0.012	0.065	0.66	3000

Remarks **1. Only rust preventive agent is applied at time of delivery. Please apply lubricant (oil or grease) before use.** NSK Clean Grease LG2 is recommended.
2. Permissible rotational speed is determined by a d · n value and a critical speed. See page B509.
Root diameter of screw shaft (dr) is 9.8 mm.

www.bergab.ru Берг АБ bergab@ya.ru Тел. (495)-228-06-21, факс (495) 223-3071

www.bergab.ru Берг АБ bergab@ya.ru Тел. (495)-228-06-21, факс (495) 223-3071

Stainless : φ12×10

Standard stock

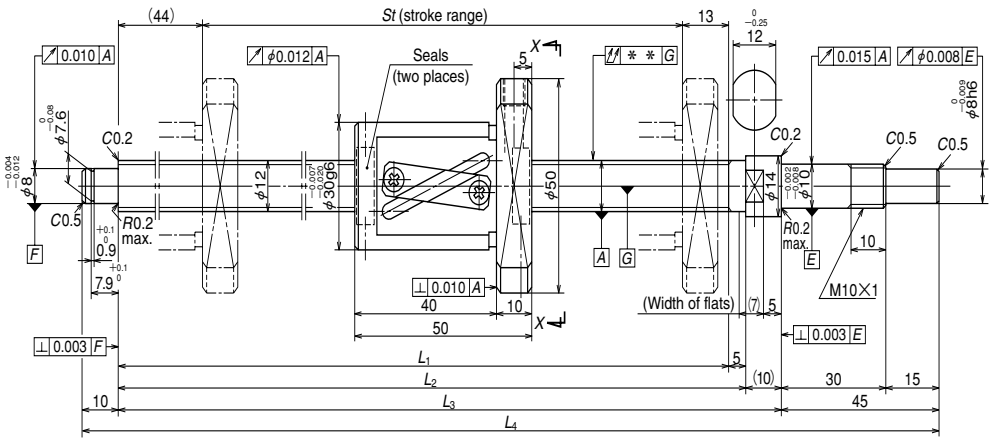

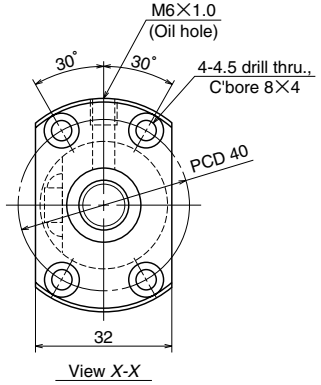

Unit: mm

Ball screw specifications		
Shaft dia. × Lead / Direction of turn		12×10/Right
Preload / Ball recirculation		P preload / Return tube
Ball dia. / Ball circle dia.		2.381/12.5
Effective turns of balls		2.5×1
Accuracy grade / Preload		C5/Z
Basic load rating (N)	Dynamic C_a	3070
	Static C_{0a}	4790
Axial play		0
Dynamic friction torque, (N·cm)		1.0～4.9
Spacer ball		None
Factory packed grease		**Refer to the remarks 1. below.**
Internal spatial volume of nut (cm³)		1.4

B 172

Unit: mm

Ball screw No.	Stroke		Thread length				Lead accuracy			Shaft run-out **	Mass (Kg)	Permissible rotational speed N (min⁻¹) Supporting condition Fixed - Simple support
	Nominal	Maximum	L_1	L_2	L_3	L_4	T	e_p	v_u			
W1203KA-3P-C5Z10	250	253	310	315	325	380	0	0.023	0.018	0.050	0.56	3000
W1205KA-3P-C5Z10	450	453	510	515	525	580	0	0.030	0.023	0.075	0.72	3000

Remarks **1. Only rust preventive agent is applied at time of delivery. Please apply lubricant (oil or grease) before use.** NSK Clean Grease LG2 is recommended.
2. Permissible rotational speed is determined by a d・n value and a critical speed. See page B509.
Root diameter of screw shaft (dr) is 10.0 mm.

www.bergab.ru Берг АБ bergab@ya.ru Тел. (495)-228-06-21, факс (495) 223-3071

www.bergab.ru Берг АБ bergab@ya.ru Тел. (495)-228-06-21, факс (495) 223-3071

Stainless : φ15×10

Standard stock

Unit: mm

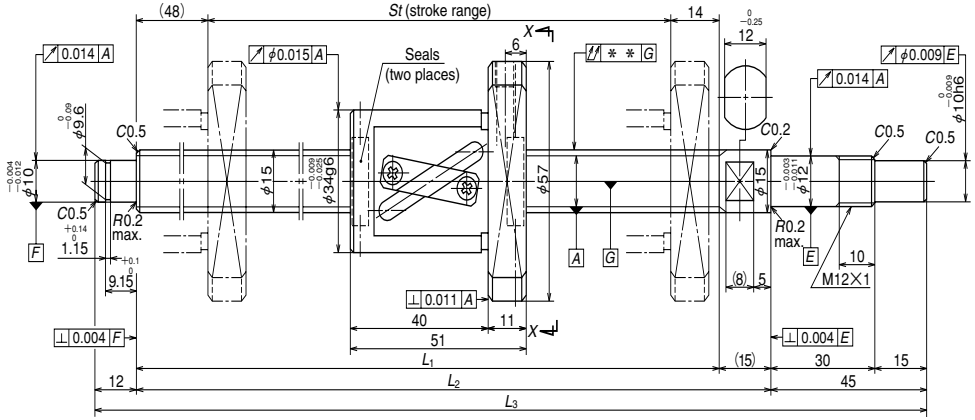

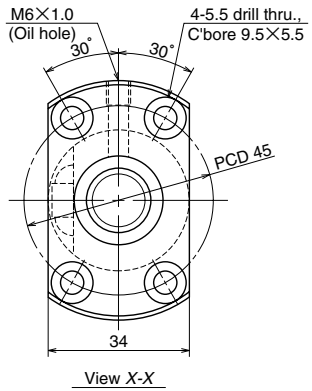

Ball screw specifications		
Shaft dia. × Lead / Direction of turn		15×10/Right
Preload / Ball recirculation		P preload / Return tube
Ball dia. / Ball circle dia.		3.175/15.5
Effective turns of balls		2.5×1
Accuracy grade / Preload		C5/Z
Basic load rating (N)	Dynamic C_a	5780
	Static C_{0a}	9430
Axial play		0
Dynamic friction torque, (N·cm)		1.5～7.9
Spacer ball		None
Factory packed grease		**Refer to the remarks 1. below.**
Internal spatial volume of nut (cm³)		2.3

B 174

Unit: mm

Ball screw No.	Stroke		Thread length			Lead accuracy			Shaft run-out **	Mass (Kg)	Permissible rotational speed N (min⁻¹) Supporting condition Fixed - Simple support
	Nominal	Maximum	L_1	L_2	L_3	T	e_p	υ_u			
W1504KA-3P-C5Z10	400	427	489	504	561	0	0.027	0.020	0.050	0.99	3000
W1506KA-3P-C5Z10	600	627	689	704	761	0	0.035	0.025	0.065	1.2	3000
W1510KA-1P-C5Z10	1000	1027	1089	1104	1161	0	0.046	0.030	0.110	1.7	1610

Remarks **1. Only rust preventive agent is applied at time of delivery. Please apply lubricant (oil or grease) before use.** NSK Clean Grease LG2 is recommended.
2. Permissible rotational speed is determined by a d · n value and a critical speed. See page B509.
Root diameter of screw shaft (dr) is 12.2 mm.

www.bergab.ru Берг АБ bergab@ya.ru Тел. (495)-228-06-21, факс (495) 223-3071

www.bergab.ru Берг АБ bergab@ya.ru Тел. (495)-228-06-21, факс (495) 223-3071

Stainless : φ15×20

Standard stock

Unit: mm

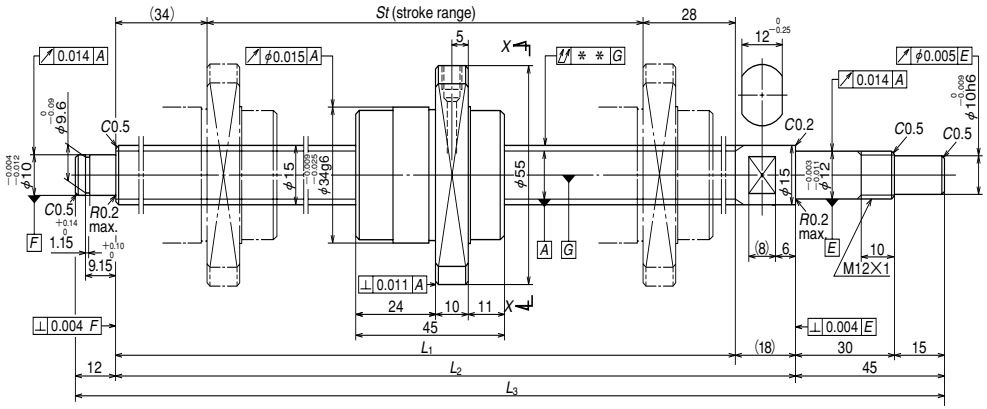

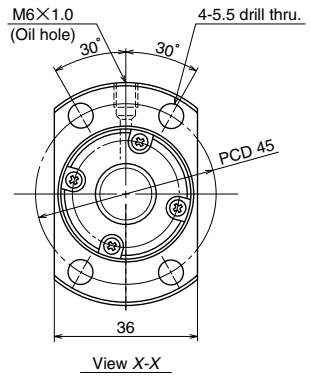

Ball screw specifications		
Shaft dia. × Lead / Direction of turn		15×20/Right
Preload / Ball recirculation		P preload / End cap
Ball dia. / Ball circle dia.		3.175/15.5
Effective turns of balls		1.7×1
Accuracy grade / Preload		C5/Z
Basic load rating (N)	Dynamic C_a	4150
	Static C_{0a}	6450
Axial play		0
Dynamic friction torque, (N·cm)		1.5～7.9
Spacer ball		None
Factory packed grease		**Refer to the remarks 1. below.**
Internal spatial volume of nut (cm³)		1.9

B 176

Unit: mm

Ball screw No.	Stroke		Thread length			Lead accuracy			Shaft run-out **	Mass (Kg)	Permissible rotational speed N (min⁻¹) Supporting condition Fixed - Simple support
	Nominal	Maximum	L_1	L_2	L_3	T	e_P	υ_u			
W1504KA-7PG-C5Z20	400	424	486	504	561	0	0.027	0.020	0.050	1.0	3000
W1506KA-7PG-C5Z20	600	624	686	704	761	0	0.035	0.025	0.065	1.3	3000
W1510KA-3PG-C5Z20	1000	1024	1086	1104	1161	0	0.046	0.030	0.110	1.8	1610

Remarks **1. Only rust preventive agent is applied at time of delivery. Please apply lubricant (oil or grease) before use.** NSK Clean Grease LG2 is recommended.
2. Permissible rotational speed is determined by a d · n value and a critical speed. See page B509.
Root diameter of screw shaft (dr) is 12.2 mm.

www.bergab.ru Берг АБ bergab@ya.ru Тел. (495)-228-06-21, факс (495) 223-3071

www.bergab.ru Берг АБ bergab@ya.ru Тел. (495)-228-06-21, факс (495) 223-3071

Stainless : φ16×2

Standard stock

Unit: mm

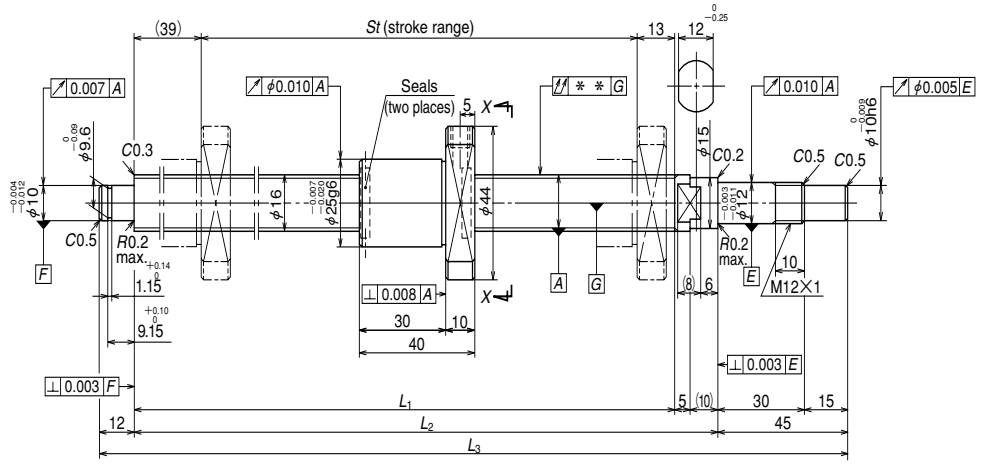

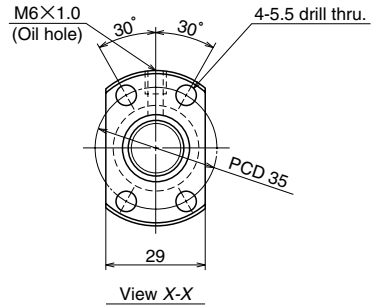

Unit: mm

Ball screw specifications		
Shaft dia. × Lead / Direction of turn		16×2/Right
Preload / Ball recirculation		P preload / Deflector
Ball dia. / Ball circle dia.		1.588/16.4
Effective turns of balls		1×4
Accuracy grade / Preload		C3/Z
Basic load rating (N)	Dynamic C_a	2870
	Static C_{0a}	6250
Axial play		0
Dynamic friction torque, (N·cm)		0.5～4.9
Spacer ball		None
Factory packed grease		**Refer to the remarks 1. below.**
Internal spatial volume of nut (cm³)		1.6

Unit: mm

Ball screw No.	Stroke		Thread length			Lead accuracy			Shaft run-out **	Mass (Kg)	Permissible rotational speed N (min⁻¹) Supporting condition Fixed - Simple support
	Nominal	Maximum	L_1	L_2	L_3	T	e_p	v_u			
W1601KA-3PY-C3Z2	100	137	189	204	261	0	0.010	0.008	0.020	0.46	3000
W1603KA-1PY-C3Z2	300	337	389	404	461	0	0.013	0.010	0.035	0.75	3000

Remarks **1. Only rust preventive agent is applied at time of delivery. Please apply lubricant (oil or grease) before use.** NSK Clean Grease LG2 is recommended.
2. Permissible rotational speed is determined by a d · n value and a critical speed. See page B509. Root diameter of screw shaft (dr) is 14.6 mm.

www.bergab.ru Берг АБ bergab@ya.ru Тел. (495)-228-06-21, факс (495) 223-3071

www.bergab.ru Берг АБ bergab@ya.ru Тел. (495)-228-06-21, факс (495) 223-3071

Stainless : φ20×20

Standard stock

Unit: mm

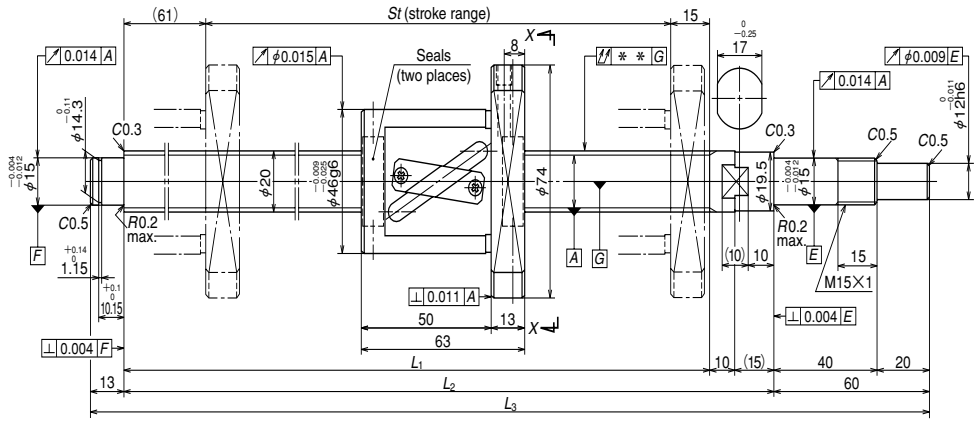

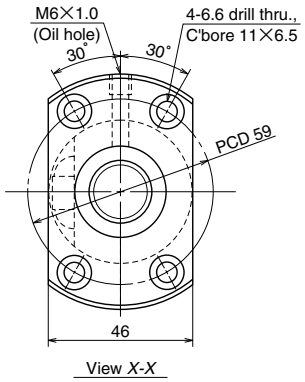

Ball screw specifications		
Shaft dia. × Lead / Direction of turn		20×20/Right
Preload / Ball recirculation		P preload / Return tube
Ball dia. / Ball circle dia.		3.969/21
Effective turns of balls		1.5×1
Accuracy grade / Preload		C5/Z
Basic load rating (N)	Dynamic C_a	5760
	Static C_{0a}	9370
Axial play		0
Dynamic friction torque, (N·cm)		2.0～11.8
Spacer ball		None
Factory packed grease		**Refer to the remarks 1. below.**
Internal spatial volume of nut (cm³)		4.2

B 180

Unit: mm

Ball screw No.	Stroke		Thread length			Lead accuracy			Shaft run-out **	Mass (Kg)	Permissible rotational speed N (min⁻¹) Supporting condition Fixed - Simple support
	Nominal	Maximum	L_1	L_2	L_3	T	e_p	v_u			
W2005KA-3P-C5Z20	400	434	510	535	608	0	0.030	0.023	0.050	2.0	3000
W2007KA-3P-C5Z20	600	634	710	735	808	0	0.035	0.025	0.085	2.5	3000
W2011KA-3P-C5Z20	1000	1034	1110	1135	1208	0	0.046	0.030	0.110	3.4	2160

Remarks **1. Only rust preventive agent is applied at time of delivery. Please apply lubricant (oil or grease) before use.** NSK Clean Grease LG2 is recommended.
2. Permissible rotational speed is determined by a d · n value and a critical speed. See page B509. Root diameter of screw shaft (dr) is 16.9 mm.

www.bergab.ru Берг АБ bergab@ya.ru Тел. (495)-228-06-21, факс (495) 223-3071

www.bergab.ru Берг АБ bergab@ya.ru Тел. (495)-228-06-21, факс (495) 223-3071

B-I-6.3 S Series

◇ **Ball screw sizes are arranged in order of the page number.**

Dimension table begins with the smallest shaft diameter ball screw, and proceed to larger sizes. If ball screws have the same shaft diameter, those with smaller leads appear first. Page numbers of shaft diameter and lead combinations are shown in the Table I-6•3.

◇ **Dimension tables**

Dimension tables show shapes/sizes as well as specification factors of each shaft diameter/lead combination. Tables also contain data as follows:

● **Lead accuracy**

Lead accuracy is C3 and C5 grades.

T : Travel compensation;

e_p : Tolerance of specified travel;

υ_u : Travel variation

See "Technical description: Lead accuracy" (Page B499) for details of the codes.

● **Permissible rotational speed**

d • n: Limited by the relative peripheral speed between the screw shaft and the nut.

Critical speed : Limited by the natural frequency of a ball screw shaft. Critical speed depends on the supporting condition of screw shaft.

Always operate under either, but the smaller permissible rotational speed. For details, see "Technical description: Permissible rotational speed" (Page B509).

◇ **Shaft end processing**

S Series requires shaft end processing to your specification. Exclusive support unit (Page B273) is available to design the shaft end support section. See "Configuration of shaft end" (Page B27 and following pages) when using a support unit. See "Technical Description: Shaft end processing" (Page B537) for procedures of shaft end processing and precautions.

◇ **Other**

Seal of the ball screw, ball recirculating deflector and end cap are made of synthetic resin. Consult NSK when using the ball screws under extreme environment or special environment, or using special lubricant or oil.

For special environment, refer to Pages B527 and D2. Refer to Pages B525 and D13 for lubricants.

Table I-6•3 S Series "Screw shaft diameter x lead" See relevant list.

Screw shaft diameter (mm) \ Lead(mm)	1	1.5	2	2.5	4	5	6	8	10	12	16	20	25	32	40	50
4	B183															
6	B183															
8	B183	B185	B185													
10			B185	B187	B189											
12			B187	B187		B189			B189							
14						B191		B191								
15									B191			B195				
16			B193	B193		B197					B197			B195		
20					B199	B199			B197			B197			B195	
25					B201	B201 B203	B201		B203 B207			B205	B205			B205
28						B207 B209	B207 B209									
32						B211 B213 B215	B211 B213	B213	B215 B217 B219				B221	B221		
36									B217 B219							
40						B217		B223	B223 B225 B227	B223 B225						
45									B229							
50									B227 B229							

www.bergab.ru Берг АБ bergab@ya.ru Тел. (495)-228-06-21, факс (495) 223-3071

www.bergab.ru Берг АБ bergab@ya.ru Тел. (495)-228-06-21, факс (495) 223-3071

φ4×1、φ6×1、φ8×1

Standard stock

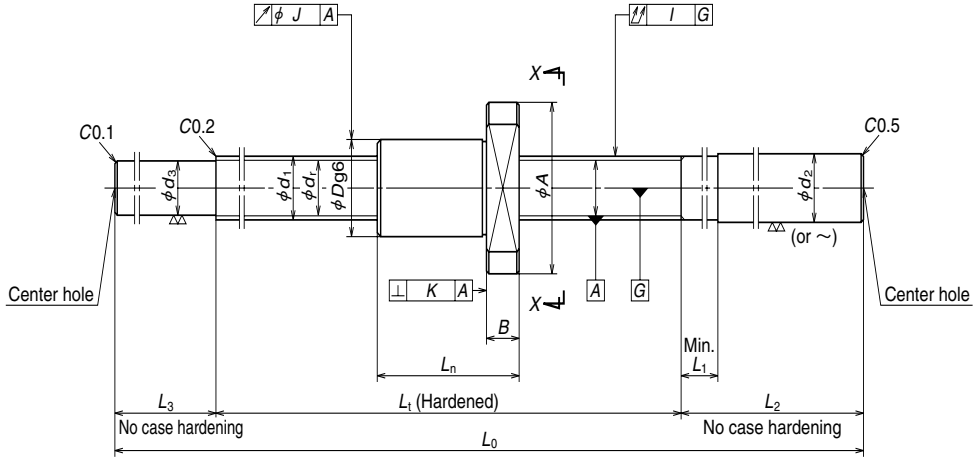

Nut type code: MSFD

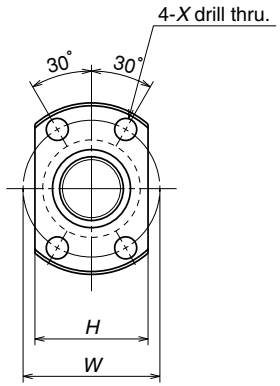

View X-X

B 184

Unit: mm

Ball screw No.	Stroke Max. L_t-L_n	Screw shaft dia. d_1	Lead l	Ball dia. D_w	Ball circle dia. d_m	Root dia. d_r	Effective ball turns	Basic load rating (N) Dynamic C_a	Basic load rating (N) Static C_{0a}	Axial play Max.	Nut Outside dia. D	Nut Flange A	Nut Flange H	Nut Flange B
W0400MS-1Y-C3T1	68	4	1	0.8	4.2	3.2	2	315	370	0.005	10	20	14	3
W0601MS-1Y-C3T1	110	6	1	0.8	6.2	5.2	3	575	925	0.005	12	24	16	3.5
W0801MS-1Y-C3T1	94	8	1	0.8	8.2	7.2	3	670	1290	0.005	14	27	18	4
W0802MS-1Y-C3T1	174													

dimensions Overall length L_n	Bolt hole W	Bolt hole X	Screw shaft dimensions Threaded length L_t	Shaft end, right d_2	Shaft end, right L_1	Shaft end, right L_2	Shaft end, left d_3	Shaft end, left L_3	Overall length L_0	Lead accuracy T	Deviation e_p	Variation υ_u	Run out Shaft straightness I	Run out Nut O.D. eccentricity J	Run out Flange perpendicularity K	Mass (Kg)	Permissible rotational speed N(min⁻¹)
12	15	2.9	80	6.0	4	40	3.3	10	130	0	0.008	0.008	0.030	0.009	0.008	0.026	3000
15	18	3.4	125	8.0	4	50	5.3	15	190	0	0.010	0.008	0.030	0.009	0.008	0.063	
16	21	3.4	110	10.2	4	60	7.3	25	195	0	0.010	0.008	0.030	0.009	0.008	0.11	
			190						275				0.050			0.14	

Remarks: 1. NSK support unit is recommended.
2. Only rust preventive agent is applied at time of delivery. Please apply lubricant (oil or grease) before use.
3. Nut does not have a seal.
4. Permissible rotational speed is determined by a d · n value and a critical speed. See page B509.

www.bergab.ru Берг АБ bergab@ya.ru Тел. (495)-228-06-21, факс (495) 223-3071

www.bergab.ru Берг АБ bergab@ya.ru Тел. (495)-228-06-21, факс (495) 223-3071

φ8×1.5、φ8×2、φ10×2

Standard stock

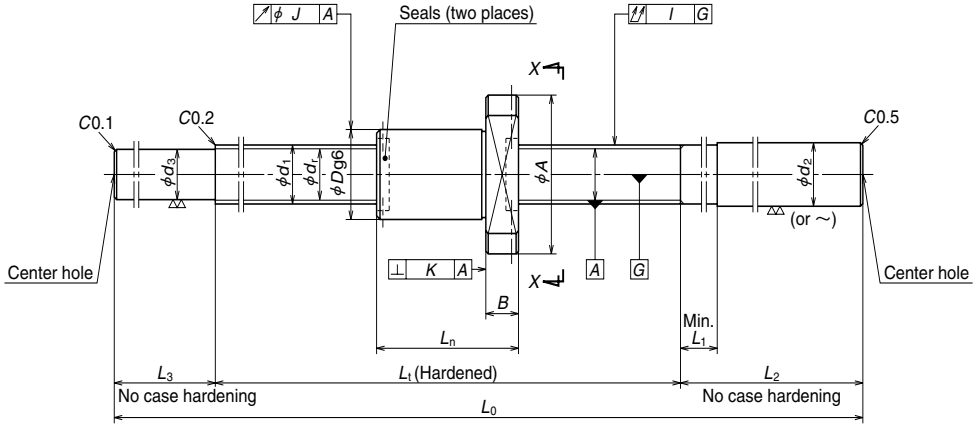

Nut type code: MSFD

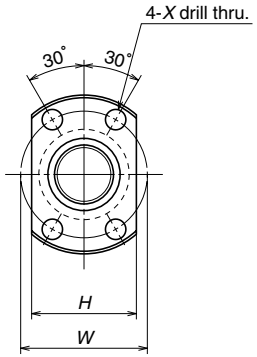

View X-X

Unit: mm

Ball screw No.	Stroke Max. L_t-L_n	Screw shaft dia. d_1	Lead l	Ball dia. D_w	Ball circle dia. d_m	Root dia. d_r	Effective ball turns	Basic load rating (N) Dynamic C_a	Basic load rating (N) Static C_{0a}	Axial play Max.	Nut Outside dia. D	Nut Flange A	Nut Flange H	Nut Flange B
W0801MS-2Y-C3T1.5	88	8	1.5	1.0	8.3	7.0	3	1080	1980	0.005	15	28	19	4
W0802MS-2Y-C3T1.5	168													
W0801MS-3Y-C3T2	84	8	2	1.2	8.3	6.9	3	1320	2210	0.005	16	29	20	4
W0802MS-3Y-C3T2	164													
W1001MS-1Y-C3T2	122	10	2	1.2	10.3	8.9	3	1490	2850	0.005	18	35	22	5
W1002MS-1Y-C3T2	222													

dimensions Overall length L_n	Bolt hole W	Bolt hole X	Screw shaft dimensions Threaded length L_t	Shaft end, right d_2	Shaft end, right L_1	Shaft end, right L_2	Shaft end, left d_3	Shaft end, left L_3	Overall length L_0	Lead accuracy T	Deviation e_p	Variation υ_u	Run out Shaft straightness I	Nut O.D. eccentricity J	Flange perpendicularity K	Mass (Kg)	Permissible rotational speed N(min-1)
22	22	3.4	110	10.2	4	60	7.2	25	195	0	0.010	0.008	0.030	0.009	0.008	0.12	3000
			190						275				0.050			0.15	
26	23	3.4	110	10.2	4	60	7.0	25	195	0	0.010	0.008	0.030	0.009	0.008	0.12	
			190						275				0.050			0.15	
28	27	4.5	150	12.2	4	70	9.0	30	250	0	0.010	0.008	0.035	0.009	0.008	0.22	
			250						350		0.012		0.050			0.27	

Remarks: 1. NSK support unit is recommended.
2. Only rust preventive agent is applied at time of delivery. Please apply lubricant (oil or grease) before use.
3. Permissible rotational speed is determined by a d・n value and a critical speed. See page B509.

www.bergab.ru Берг АБ bergab@ya.ru Тел. (495)-228-06-21, факс (495) 223-3071

www.bergab.ru Берг АБ bergab@ya.ru Тел. (495)-228-06-21, факс (495) 223-3071

φ10×2.5、φ12×2、φ12×2.5

Standard stock

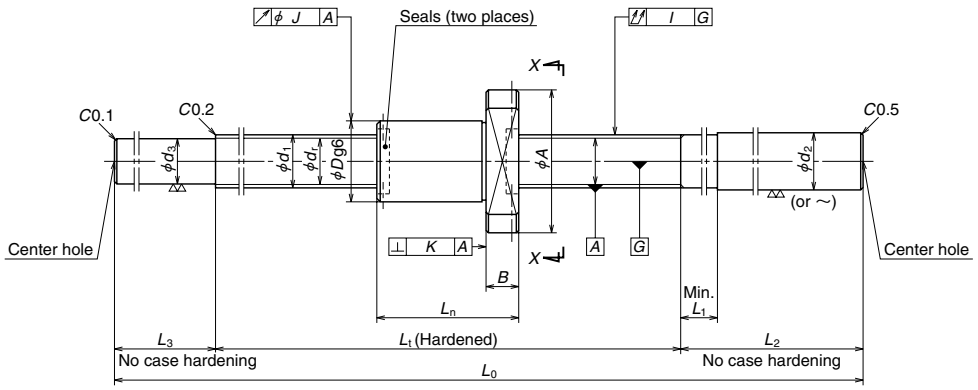

Nut type code: MSFD

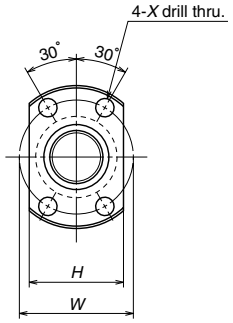

View X-X

Unit: mm

Ball screw No.	Stroke Max. L_t-L_n	Screw shaft dia. d_1	Lead l	Ball dia. D_w	Ball circle dia. d_m	Root dia. d_r	Effective ball turns	Basic load rating (N) Dynamic C_a	Static C_{0a}	Axial play Max.	Nut Outside dia. D	Flange A	H	B
W1001MS-2Y-C3T2.5	118	10	2.5	1.588	10.4	8.6	3	2130	3640	0.005	19	36	23	5
W1002MS-2Y-C3T2.5	218													
W1202MS-1Y-C3T2	182	12	2	1.200	12.3	10.9	3	1660	3620	0.005	20	37	24	5
W1203MS-1Y-C3T2	282													
W1202MS-2Y-C3T2.5	178	12	2.5	1.588	12.4	10.6	3	2360	4540	0.005	21	38	25	5
W1203MS-2Y-C3T2.5	278													

dimensions Overall length L_n	Bolt hole W	X	Screw shaft dimensions Threaded length L_t	Shaft end, right d_2	L_1	L_2	Shaft end, left d_3	L_3	Overall length L_0	Lead accuracy T	Deviation e_p	Variation υ_u	Run out Shaft straightness I	Nut O.D. eccentricity J	Flange perpendicularity K	Mass (Kg)	Permissible rotational speed N(min^{-1})
32	28	4.5	150	12.2	4	70	8.7	30	250	0	0.010	0.008	0.035	0.010	0.008	0.23	3000
			250						350		0.012		0.050			0.28	
28	29	4.5	210	14.2	5	80	11.0	35	325	0	0.012	0.008	0.050	0.010	0.008	0.36	
			310						425				0.060			0.44	
32	30	4.5	210	14.2	5	80	10.7	35	325	0	0.012	0.008	0.050	0.010	0.008	0.37	
			310						425				0.060			0.45	

Remarks: 1. NSK support unit is recommended.
2. Only rust preventive agent is applied at time of delivery. Please apply lubricant (oil or grease) before use.
3. Permissible rotational speed is determined by a d · n value and a critical speed. See page B509.

www.bergab.ru Берг АБ bergab@ya.ru Тел. (495)-228-06-21, факс (495) 223-3071

www.bergab.ru Берг АБ bergab@ya.ru Тел. (495)-228-06-21, факс (495) 223-3071

φ10×4、φ12×5、φ12×10

Standard stock

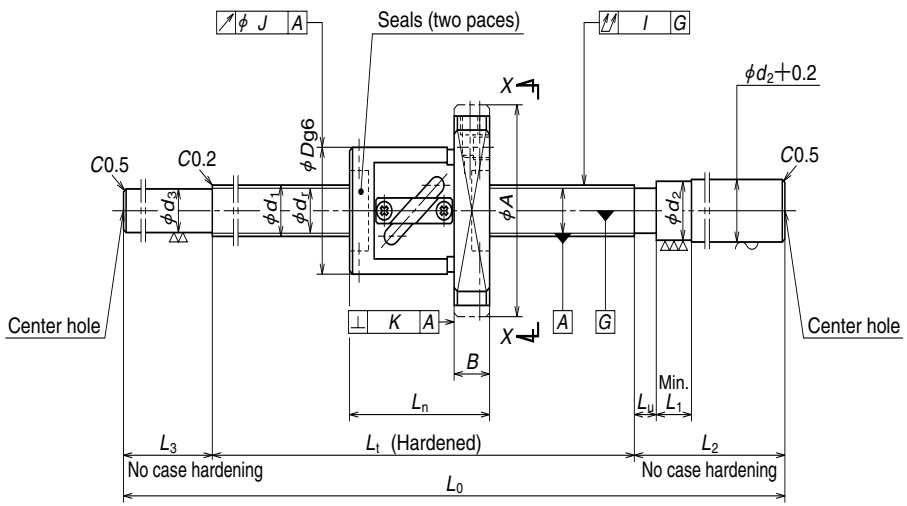

Nut type code: SFT, LSFT

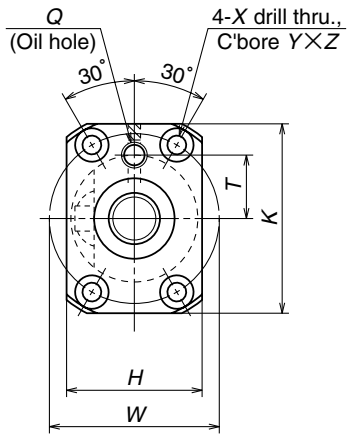

View X-X

B 190

Unit: mm

Ball screw No.	Stroke Max. L_t-L_n	Screw shaft dia. d_1	Lead l	Ball dia. D_w	Ball circle dia. d_m	Rood dia. d_r	Effective ball turns: Turns × Circuits	Basic load rating (N) Dynamic C_a	Basic load rating (N) Static C_{0a}	Axial play Max.	Nut: Outside dia. D	Nut: Flange A	Nut: Flange H	Nut: Flange K	Nut: Flange B	Nut: Overall length L_n
W1001FS-1-C3T4	126	10	4	2.000	10.3	8.2	2.5×1	2470	4450	0.005	26	46	28	42	10	34
W1002FS-1-C3T4	226															
W1003FS-1-C3T4	326															
W1201FS-1-C3T5	110	12	5	2.381	12.3	9.8	2.5×1	3760	6310	0.005	30	50	32	45	10	40
W1202FS-1-C3T5	210															
W1204FS-1-C3T5	410															
W1202FS-2-C5T10	200	12	10	2.381	12.5	10.0	2.5×1	3750	6480	0.005	30	50	32	45	10	50
W1204FS-2-C5T10	400															

Ball screw No.	dimensions: Bolt hole W	Bolt hole X	Bolt hole Y	Bolt hole Z	Oil hole Q	Oil hole T	Screw shaft dimensions: Threaded length L_t	Shaft end, right d_2	Shaft end, right L_u	Shaft end, right L_1	Shaft end, right L_2	Shaft end, left d_3	Shaft end, left L_3	Overall length L_0	Lead accuracy T	Deviation e_p	Variation υ_u	Run out: Shaft straightness I	Run out: Nut O.D. eccentricity J	Run out: Flange perpendicularity K	Mass (Kg)	Permissible rotational speed N(min⁻¹)
W1001FS-1-C3T4	36	4.5	8	4.5	M6×1	14	160	14	5	40	70	8.2	35	265	0	0.010	0.008	0.030	0.010	0.008	0.34	3000
W1002FS-1-C3T4							260							365		0.012	0.008	0.040			0.39	
W1003FS-1-C3T4							360							465		0.013	0.010	0.050			0.45	
W1201FS-1-C3T5	40	4.5	8	4.5	M6×1	15	150	14	5	40	70	9.8	35	255	0	0.010	0.008	0.030	0.010	0.008	0.44	
W1202FS-1-C3T5							250							355		0.012	0.008	0.040			0.52	
W1204FS-1-C3T5							450							555		0.015	0.010	0.065			0.67	
W1202FS-2-C5T10	40	4.5	8	4.5	M6×1	15	250	14	8	40	70	10.0	35	355	0	0.023	0.018	0.050	0.012	0.010	0.57	
W1204FS-2-C5T10							450							555		0.027	0.020	0.075			0.74	

Remarks: 1. NSK support unit is recommended.
2. Only rust preventive agent is applied at time of delivery. Please apply lubricant (oil or grease) before use.
3. Permissible rotational speed is determined by a d · n value and a critical speed. See page B509.

www.bergab.ru Берг АБ bergab@ya.ru Тел. (495)-228-06-21, факс (495) 223-3071

www.bergab.ru Берг АБ bergab@ya.ru Тел. (495)-228-06-21, факс (495) 223-3071

φ14×5、φ14×8、φ15×10

Standard stock

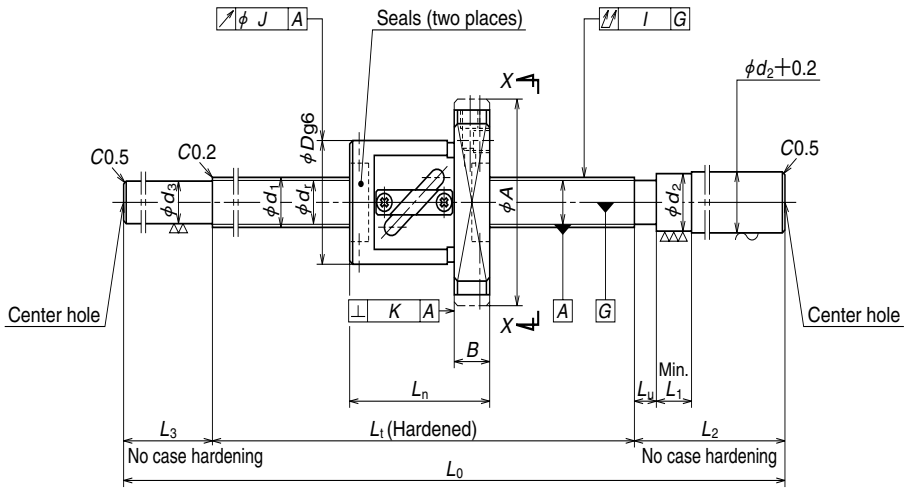

Nut type code: SFT, LSFT

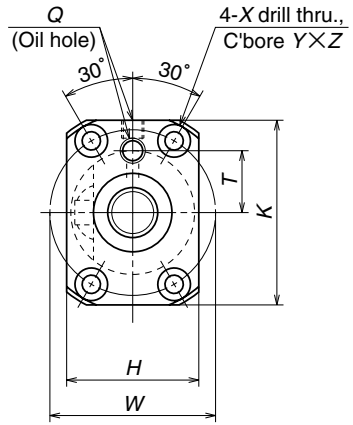

View X-X

Unit: mm

Ball screw No.	Stroke Max. L_t-L_n	Screw shaft dia. d_1	Lead l	Ball dia. D_w	Ball circle dia. d_m	Root dia. d_r	Effective ball turns: Turns × Circuits	Basic load rating (N) Dynamic C_a	Basic load rating (N) Static C_{0a}	Axial play Max.	Nut: Outside dia. D	Nut: Flange A	Nut: Flange H	Nut: Flange K	Nut: Flange B	Nut: Overall length L_n
W1403FS-1-C3T5	310	14	5	3.175	14.5	11.2	2.5×1	6790	11700	0.005	34	57	34	50	11	40
W1406FS-1-C3T5	560															
W1405FS-1-C5T8	454	14	8	3.175	14.5	11.2	2.5×1	6790	11700	0.005	34	57	34	50	11	46
W1408FS-1-C5T8	754															
W1504FS-1-C5T10	349	15	10	3.175	15.5	12.2	2.5×1	7070	12800	0.005	34	57	34	50	11	51
W1506FS-1-C5T10	549															
W1509FS-1-C5T10	849															
W1511FS-1-C5T10	1049															

dimensions: Bolt hole W	Bolt hole X	Bolt hole Y	Bolt hole Z	Oil hole Q	Oil hole T	Screw shaft dimensions: Threaded length L_t	Shaft end, right d_2	Shaft end, right L_u	Shaft end, right L_1	Shaft end, right L_2	Shaft end, left d_3	Shaft end, left L_3	Overall length L_0	Lead accuracy T	Deviation e_p	Variation v_u	Run out: Shaft straightness I	Run out: Nut O.D. eccentricity J	Run out: Flange perpendicularity K	Mass (Kg)	Permissible rotational speed N(min⁻¹)
45	5.5	9.5	5.5	M6×1	17	350	15	5	40	100	11.2	40	490	0	0.013	0.010	0.035	0.012	0.008	0.78	3000
						600							740		0.016	0.012	0.055			1.0	
45	5.5	9.5	5.5	M6×1	17	500	15	8	40	100	11.2	40	640	0	0.027	0.020	0.065	0.015	0.011	1.0	
						800							940		0.035	0.025	0.085			1.3	
45	5.5	9.5	5.5	M6×1	17	400	15	8	40	120	12.2	50	570	0	0.025	0.020	0.050	0.015	0.011	1.0	
						600							770		0.030	0.023	0.065			1.3	
						900							1070		0.040	0.027	0.110			1.7	
						1100							1270		0.046	0.030	0.150			1.9	

Remarks: 1. NSK support unit is recommended.
2. Only rust preventive agent is applied at time of delivery. Please apply lubricant (oil or grease) before use.
3. Permissible rotational speed is determined by a d · n value and a critical speed. See page B509.

www.bergab.ru Берг АБ bergab@ya.ru Тел. (495)-228-06-21, факс (495) 223-3071

www.bergab.ru Берг АБ bergab@ya.ru Тел. (495)-228-06-21, факс (495) 223-3071

φ16×2、φ16×2.5

Standard stock

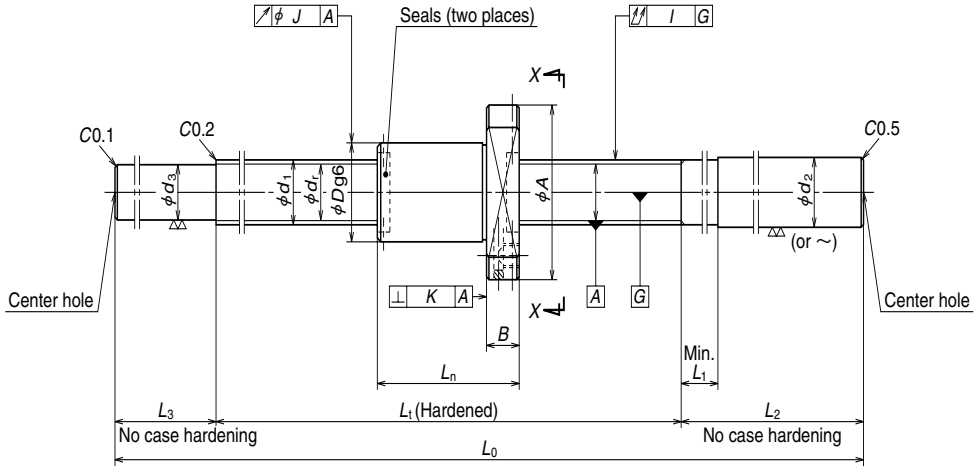

Nut type code: MSFD

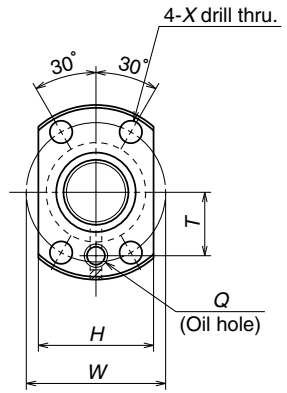

View X-X

Unit: mm

Ball screw No.	Stroke Max. L_t-L_n	Screw shaft dia. d_1	Lead l	Ball dia. D_w	Ball circle dia. d_m	Root dia. d_r	Effective ball turns	Basic load rating (N) Dynamic C_a	Static C_{0a}	Axial play Max.	Nut: Outside dia. D	Flange A	H	B	Overall length L_n
W1602MS-1Y-C3T2	210	16	2	1.588	16.4	14.6	4	3510	8450	0.005	25	44	29	10	40
W1604MS-1Y-C3T2	360														
W1602MS-2Y-C3T2.5	206	16	2.5	1.588	16.4	14.6	4	3510	8450	0.005	25	44	29	10	44
W1604MS-2Y-C3T2.5	356														

dimensions: Bolt hole W	Bolt hole X	Oil hole Q	Oil hole T	Screw shaft dimensions: Threaded length L_t	Shaft end, right d_2	L_1	L_2	Shaft end, left d_3	L_3	Overall length L_0	Lead accuracy T	Deviation e_p	Variation υ_u	Run out: Shaft straightness I	Nut O.D. eccentricity J	Flange perpendicularity K	Mass (Kg)	Permissible rotational speed N(min⁻¹)
35	5.5	M6×1	16	250	16.2	30	100	14.7	40	390	0	0.012	0.008	0.035	0.010	0.008	0.71	3000
				400						540		0.013	0.010	0.050			0.93	
35	5.5	M6×1	16	250	16.2	30	100	14.7	40	390	0	0.012	0.008	0.035	0.010	0.008	0.73	
				400						540		0.013	0.010	0.050			0.95	

Remarks: 1. NSK support unit is recommended.
2. Only rust preventive agent is applied at time of delivery. Please apply lubricant (oil or grease) before use.
3. Permissible rotational speed is determined by a d · n value and a critical speed. See page B509.

www.bergab.ru Берг АБ bergab@ya.ru Тел. (495)-228-06-21, факс (495) 223-3071

www.bergab.ru Берг АБ bergab@ya.ru Тел. (495)-228-06-21, факс (495) 223-3071

φ15×20、φ16×32、φ20×40

Standard stock

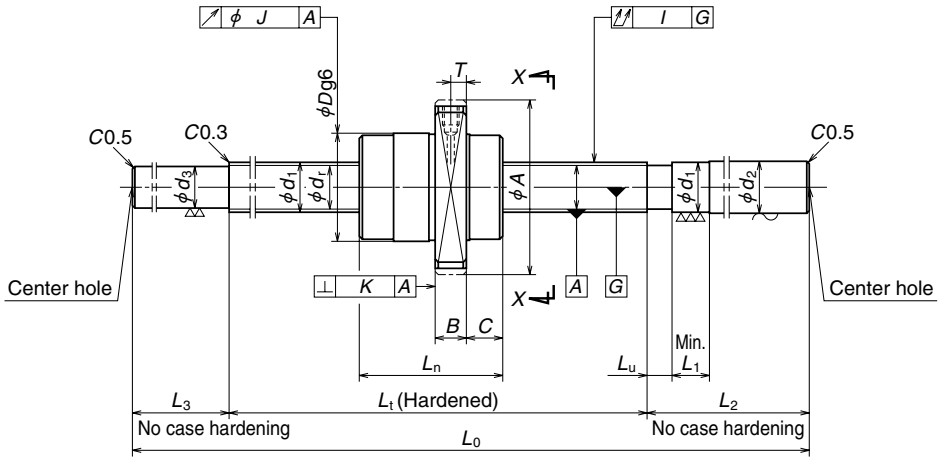

Nut type code: USFC

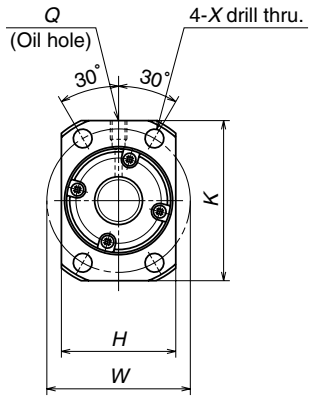

View X-X

Unit: mm

Ball screw No.	Stroke Max. L_t-L_n	Screw shaft dia. d_1	Lead l	Ball dia. D_w	Ball circle dia. d_m	Root dia. d_r	Effective ball turns Turns × Circuits	Basic load rating (N) Dynamic C_a	Basic load rating (N) Static C_{0a}	Axial play Max.	Nut Outside dia. D	Nut Flange A	Nut Flange H	Nut Flange K	Nut Flange B	Nut Flange C
W1504FS-2G-C5T20	355	15	20	3.175	15.5	12.2	1.7×1	5070	8730	0.005	34	55	36	50	10	11
W1506FS-2G-C5T20	555															
W1509FS-2G-C5T20	855															
W1511FS-2G-C5T20	1055															
W1609FS-2GX-C5T32	866	16	32	3.175	16.75	13.4	0.7×2	4000	6690	0.005	34	55	36	50	10	10.5
W1613FS-1GX-C5T32	1266															
W2011FS-1GX-C5T40	1059	20	40	3.175	20.75	17.4	0.7×2	4490	8640	0.005	38	58	40	52	10	11
W2017FS-1GX-C5T40	1659															

Ball screw No.	dimensions Overall length L_n	Bolt hole W	Bolt hole X	Oil hole Q	Oil hole T	Screw shaft dimensions Threaded length L_t	Shaft end, right d_2	Shaft end, right L_u	Shaft end, right L_1	Shaft end, right L_2	Shaft end, left d_3	Shaft end, left L_3	Overall length L_0	Lead accuracy Travel compensation T	Lead accuracy Deviation e_p	Lead accuracy Variation v_u	Run out Shaft straightness I	Run out Nut O.D. eccentricity J	Run out Flange perpendicularity K	Mass (Kg)	Permissible rotational speed N(min⁻¹)
W1504FS-2G-C5T20	45	45	5.5	M6×1	5	400	15.2	13	40	120	12.2	50	570	0	0.025	0.020	0.050	0.015	0.011	1.0	3000
W1506FS-2G-C5T20						600							770		0.030	0.023	0.065			1.3	
W1509FS-2G-C5T20						900							1070		0.040	0.027	0.110			1.7	
W1511FS-2G-C5T20						1100							1270		0.046	0.030	0.150			2.0	
W1609FS-2GX-C5T32	34	45	5.5	M6×1	5	900	16.2	19	40	150	13.4	60	1110	0	0.040	0.027	0.110	0.015	0.011	1.9	3000
W1613FS-1GX-C5T32						1300							1510		0.054	0.035	0.150			2.5	
W2011FS-1GX-C5T40	41	48	5.5	M6×1	5	1100	20.2	22	60	150	17.4	80	1330	0	0.046	0.030	0.150	0.015	0.011	3.5	3000
W2017FS-1GX-C5T40						1700							1930		0.065	0.040	0.200			4.9	

Remarks: 1. NSK support unit is recommended.
2. Only rust preventive agent is applied at time of delivery. Please apply lubricant (oil or grease) before use.
3. Permissible rotational speed is determined by a d · n value and a critical speed. See page B509.

www.bergab.ru Берг АБ bergab@ya.ru Тел. (495)-228-06-21, факс (495) 223-3071

www.bergab.ru Берг АБ bergab@ya.ru Тел. (495)-228-06-21, факс (495) 223-3071

φ16×5、φ16×16、φ20×10、φ20×20

Standard stock

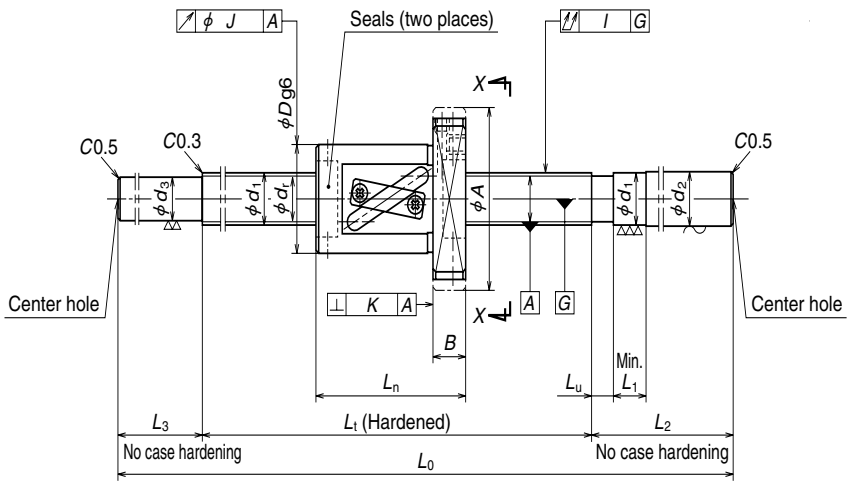

Nut type code: SFT, LSFT

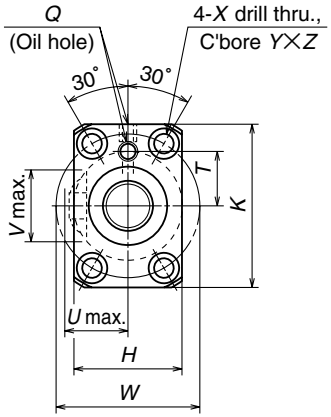

View X-X

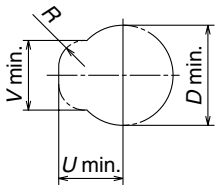

Housing hole and its clearance
(Only applicable to shaft dia. 16×lead 16)

B 198

Unit: mm

Ball screw No.	Stroke Max. L_t-L_n	Screw shaft dia. d_1	Lead l	Ball dia. D_w	Ball circle dia. d_m	Root dia. d_r	Effective ball turns: Turns × Circuits	Basic load rating (N): Dynamic C_a	Basic load rating (N): Static C_{0a}	Axial play Max.	Nut: Outside dia. D	Nut: Flange A	Nut: Flange H	Nut: Flange K	Nut: Flange B	Nut: Overall length L_n	Nut: Bolt W	Nut: Bolt X
W1605FS-1-C3T5	458	16	5	3.175	16.5	13.2	2.5×1	7330	13500	0.005	40	63	40	55	11	42	51	5.5
W1609FS-1-C3T5	858																	
W1606FS-1-C5T16	544	16	16	3.175	16.75	13.4	1.5×1	4710	8110	0.005	34	57	34	50	12	56	45	5.5
W1611FS-1-C5T16	1044																	
W2009FS-1-C5T10	846	20	10	3.969	21	16.9	2.5×1	10900	21700	0.005	46	74	46	66	13	54	59	6.6
W2013FS-1-C5T10	1246																	
W2010FS-1-C5T20	937	20	20	3.969	21	16.9	1.5×1	7040	12700	0.005	46	74	46	66	13	63	59	6.6
W2015FS-1-C5T20	1437																	

Ball screw No.	dimensions: hole Y	hole Z	Projecting tube U	Projecting tube V	Projecting tube R	Oil hole Q	Oil hole T	Screw shaft dimensions: Threaded length L_t	Shaft end, right d_2	Shaft end, right L_u	Shaft end, right L_1	Shaft end, left L_2	Shaft end, left d_3	Shaft end, left L_3	Overall length L_0	Lead accuracy T	Deviation e_p	Variation υ_u	Run out: Shaft straightness I	Run out: Nut O.D. eccentricity J	Run out: Flange perpendicularity K	Mass (Kg)	Permissible rotational speed N(min⁻¹)
W1605FS-1-C3T5	9.5	5.5	—	—	—	M6×1	17	500	16.2	5	40	150	13.2	60	710	0	0.015	0.010	0.055	0.012	0.008	1.4	3000
W1609FS-1-C3T5								900							1110		0.021	0.015	0.095			1.9	
W1606FS-1-C5T16	9.5	5.5	19	20	8	M6×1	17	600	16.2	10	40	150	13.4	60	810	0	0.030	0.023	0.085	0.015	0.011	1.5	3000
W1611FS-1-C5T16								1100							1310		0.046	0.030	0.150			2.3	
W2009FS-1-C5T10	11	6.5	—	—	—	M6×1	24	900	20.2	10	60	150	16.9	80	1130	0	0.040	0.027	0.110	0.015	0.011	3.2	3000
W2013FS-1-C5T10								1300							1530		0.054	0.035	0.150			4.1	
W2010FS-1-C5T20	11	6.5	—	—	—	M6×1	24	1000	20.2	13	60	150	16.9	80	1230	0	0.040	0.027	0.110	0.015	0.011	3.6	3000
W2015FS-1-C5T20								1500							1730		0.054	0.035	0.200			4.8	

Remarks: 1. NSK support unit is recommended.
2. Only rust preventive agent is applied at time of delivery. Please apply lubricant (oil or grease) before use.
3. Permissible rotational speed is determined by a d · n value and a critical speed. See page B509.

www.bergab.ru Берг АБ bergab@ya.ru Тел. (495)-228-06-21, факс (495) 223-3071

www.bergab.ru Берг АБ bergab@ya.ru Тел. (495)-228-06-21, факс (495) 223-3071

φ20×4、φ20×5

Standard stock

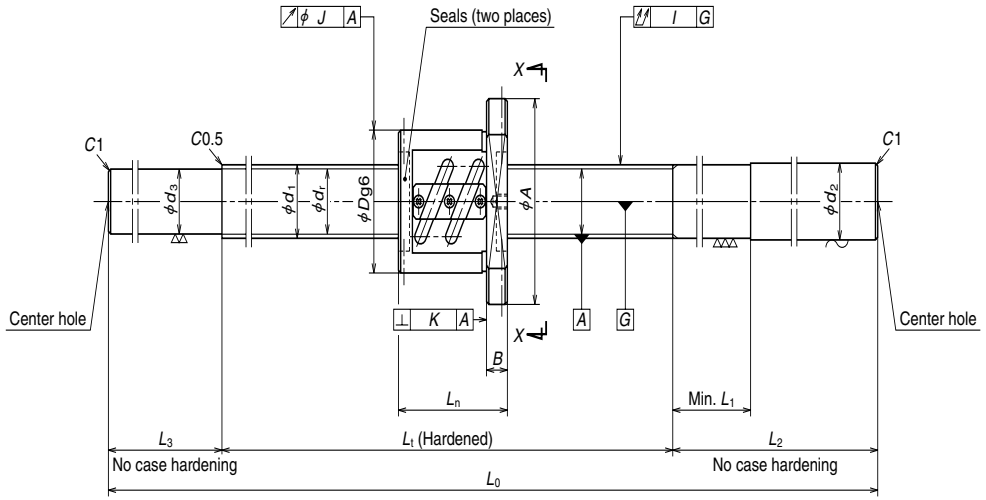

Nut type code: PFT

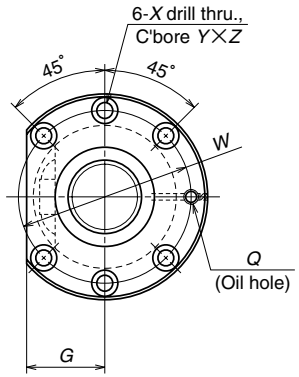

View X-X

B 200

Unit: mm

Ball screw No.	Stroke Max. L_t-L_n	Screw shaft dia. d_1	Lead l	Ball dia. D_w	Ball circle dia. d_m	Root dia. d_r	Effective ball turns: Turns × Circuits	Basic load rating (N) Dynamic C_a	Basic load rating (N) Static C_{0a}	Preload (N)	Dynamic friction torque, median (N · cm)	Nut: Outside dia. D	Nut: Flange A	Nut: Flange G	Nut: Flange B	Nut: Overall length L_n
W2003SS-1P-C5Z4	251	20	4	2.381	20.3	17.8	2.5×2	5420	10700	290	3.9	40	63	24	11	49
W2005SS-1P-C5Z4	451															
W2008SS-1P-C5Z4	751															
W2003SS-2P-C5Z5	244	20	5	3.175	20.5	17.2	2.5×2	9410	17100	490	7.8	44	67	26	11	56
W2005SS-2P-C5Z5	444															
W2007SS-1P-C5Z5	644															
W2010SS-1P-C5Z5	944															

dimensions: Bolt hole W	Bolt hole X	Bolt hole Y	Bolt hole Z	Oil hole Q	Screw shaft dimensions: Threaded length L_t	Shaft end, right d_2	Shaft end, right L_1	Shaft end, right L_2	Shaft end, left d_3	Shaft end, left L_3	Overall length L_0	Lead accuracy: Travel compensation T	Deviation e_p	Variation v_u	Run out: Shaft straightness I	Nut O.D. eccentricity J	Flange perpendicularity K	Mass (Kg)	Permissible rotational speed N(min⁻¹)
51	5.5	9.5	5.5	M6×1	300	20.2	40	150	17.8	—	450	-0.007	0.023	0.018	0.055	0.015	0.011	1.5	3000
					500			150		50	700	-0.012	0.027	0.020	0.085			2.0	
					800			200		100	1100	-0.019	0.035	0.025	0.140			2.9	
55	5.5	9.5	5.5	M6×1	300	20.2	40	150	17.2	—	450	-0.007	0.023	0.018	0.055	0.015	0.011	1.6	3000
					500			150		50	700	-0.012	0.027	0.020	0.085			2.2	
					700			200		100	1000	-0.017	0.035	0.025	0.110			2.8	
					1000			200		100	1300	-0.024	0.040	0.027	0.180			3.5	

Remarks: 1. NSK support unit is recommended.
2. Only rust preventive agent is applied at time of delivery. Please apply lubricant (oil or grease) before use.
3. Permissible rotational speed is determined by a d · n value and a critical speed. See page B509.

www.bergab.ru Берг АБ bergab@ya.ru Тел. (495)-228-06-21, факс (495) 223-3071

www.bergab.ru Берг АБ bergab@ya.ru Тел. (495)-228-06-21, факс (495) 223-3071

φ25×4、φ25×5、φ25×6

Standard stock

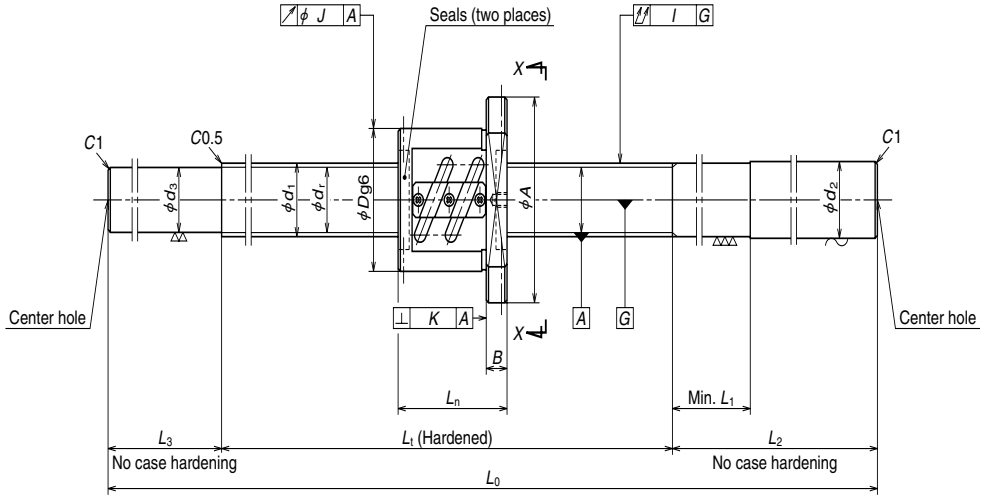

Nut type code: PFT

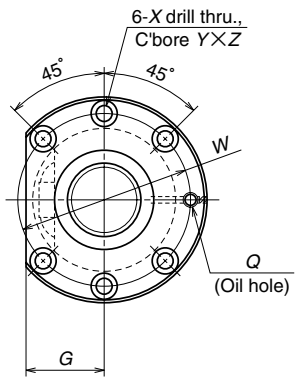

View X-X

B 202

Unit: mm

Ball screw No.	Stroke Max. L_t-L_n	Screw shaft dia. d_1	Lead l	Ball dia. D_w	Ball circle dia. d_m	Root dia. d_r	Effective ball turns: Turns × Circuits	Basic load rating (N) Dynamic C_a	Basic load rating (N) Static C_{0a}	Preload (N)	Dynamic friction torque, median (N・cm)	Nut: Outside dia. D	Nut: Flange A	Nut: Flange G	Nut: Flange B	Nut: Overall length L_n
W2503SS-1P-C5Z4	252	25	4	2.381	25.3	22.8	2.5×2	6020	13600	290	4.9	46	69	26	11	48
W2506SS-1P-C5Z4	552															
W2510SS-1P-C5Z4	952															
W2503SS-2P-C5Z5	245	25	5	3.175	25.5	22.2	2.5×2	10400	21900	540	8.8	50	73	28	11	55
W2505SS-1P-C5Z5	445															
W2508SS-1P-C5Z5	745															
W2512SS-1P-C5Z5	1145															
W2504SS-1P-C5Z6	338	25	6	3.969	25.5	21.4	2.5×2	14100	26800	690	13.8	53	76	29	11	62
W2508SS-2P-C5Z6	738															
W2512SS-2P-C5Z6	1138															

dimensions: Bolt hole W	X	Y	Z	Oil hole Q	Screw shaft dimensions: Threaded length L_t	Shaft end, right d_2	L_1	L_2	Shaft end, left d_3	L_3	Overall length L_0	Lead accuracy: Travel compensation T	Deviation e_p	Variation υ_u	Run out: Shaft straightness I	Nut O.D. eccentricity J	Flange perpendicularity K	Mass (Kg)	Permissible rotational speed N(min⁻¹)
57	5.5	9.5	5.5	M6×1	300	25.2	40	150	22.8	—	450	-0.007	0.023	0.018	0.040	0.015	0.011	2.2	2800
					600			200		100	900	-0.014	0.030	0.023	0.075			3.8	
					1000			200		100	1300	-0.024	0.040	0.027	0.120			5.2	
61	5.5	9.5	5.5	M6×1	300	25.2	40	200	22.2	—	500	-0.007	0.023	0.018	0.040	0.015	0.011	2.5	2800
					500			200		50	750	-0.012	0.027	0.020	0.060			3.4	
					800			250		100	1150	-0.019	0.035	0.025	0.090			4.8	
					1200			300		100	1600	-0.029	0.046	0.030	0.120			6.3	
64	5.5	9.5	5.5	M6×1	400	25.2	40	200	21.4	—	600	-0.010	0.025	0.020	0.050	0.019	0.013	3.0	2800
					800			250		100	1150	-0.019	0.035	0.025	0.090			4.8	
					1200			300		100	1600	-0.029	0.046	0.030	0.120			6.3	

Remarks: 1. NSK support unit is recommended.
2. Only rust preventive agent is applied at time of delivery. Please apply lubricant (oil or grease) before use.
3. Permissible rotational speed is determined by a d・n value and a critical speed. See page B509.

www.bergab.ru Берг АБ bergab@ya.ru Тел. (495)-228-06-21, факс (495) 223-3071

www.bergab.ru Берг АБ bergab@ya.ru Тел. (495)-228-06-21, факс (495) 223-3071

φ25×5、φ25×10

Standard stock

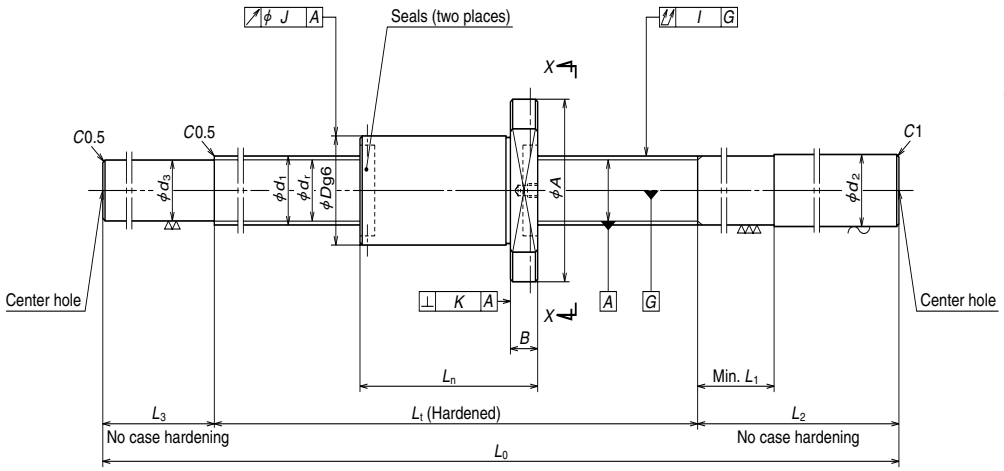

Nut type code: ZFD

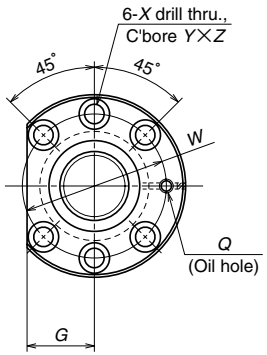

View X-X

B 204

Unit: mm

Ball screw No.	Stroke Max. L_t-L_n	Screw shaft dia. d_1	Lead l	Ball dia. D_w	Ball circle dia. d_m	Root dia. d_r	Effective ball turns Turns × Circuits	Basic load rating (N) Dynamic C_a	Basic load rating (N) Static C_{0a}	Preload (N)	Dynamic friction torque, median (N · cm)	Nut Outside dia. D	Nut Flange A	Nut Flange G	Nut Flange B	Nut Overall length L_n
W2502SS-1ZY-C5Z5	184	25	5	3.175	25.75	22.4	1×3	9790	22900	740	13.8	40	63	24	11	66
W2504SS-3ZY-C5Z5	334															
W2506SS-2ZY-C5Z5	534															
W2509SS-1ZY-C5Z5	834															
W2512SS-3ZY-C5Z5	1134															
W2504SS-4ZY-C5Z10	312	25	10	4.762	26.25	21.3	1×2	11400	21400	880	21.5	42	69	26	15	88
W2506SS-3ZY-C5Z10	512															
W2508SS-3ZY-C5Z10	712															
W2511SS-1ZY-C5Z10	1012															
W2515SS-2ZY-C5Z10	1412															

Ball screw No.	dimensions Bolt hole W	X	Y	Z	Oil hole Q	Screw shaft dimensions Threaded length L_t	Shaft end, right d_2	L_1	L_2	Shaft end, left d_3	L_3	Overall length L_0	Lead accuracy Travel compensation T	Deviation e_p	Variation v_u	Run out Shaft straightness I	Nut O.D. eccentricity J	Flange perpendicularity K	Mass (Kg)	Permissible rotational speed N(min⁻¹)
W2502SS-1ZY-C5Z5	51	5.5	9.5	5.5	M6×1	250	25.2	40	200	22.4	—	450	-0.005	0.023	0.018	0.040	0.015	0.011	2.1	2800
W2504SS-3ZY-C5Z5						400			200		50	650	-0.009	0.025	0.020	0.060			2.8	
W2506SS-2ZY-C5Z5						600			250		100	950	-0.013	0.030	0.023	0.075			3.9	
W2509SS-1ZY-C5Z5						900			250		100	1250	-0.021	0.040	0.027	0.090			4.9	
W2512SS-3ZY-C5Z5						1200			300		100	1600	-0.028	0.046	0.030	0.120			6.2	
W2504SS-4ZY-C5Z10	55	6.6	11	6.5	M6×1	400	25.2	60	200	21.3	50	650	-0.008	0.025	0.020	0.060	0.015	0.011	3.0	2800
W2506SS-3ZY-C5Z10						600			250		100	950	-0.012	0.030	0.023	0.075			4.1	
W2508SS-3ZY-C5Z10						800			250		100	1150	-0.017	0.035	0.025	0.090			4.8	
W2511SS-1ZY-C5Z10						1100			300		100	1500	-0.024	0.046	0.030	0.120			6.0	
W2515SS-2ZY-C5Z10						1500			300		100	1900	-0.034	0.054	0.035	0.150			7.4	

Remarks: 1. NSK support unit is recommended.
2. Only rust preventive agent is applied at time of delivery. Please apply lubricant (oil or grease) before use.
3. Permissible rotational speed is determined by a d · n value and a critical speed. See page B509.

www.bergab.ru Берг АБ bergab@ya.ru Тел. (495)-228-06-21, факс (495) 223-3071

www.bergab.ru Берг АБ bergab@ya.ru Тел. (495)-228-06-21, факс (495) 223-3071

φ25×20、φ25×25、φ25×50

Standard stock

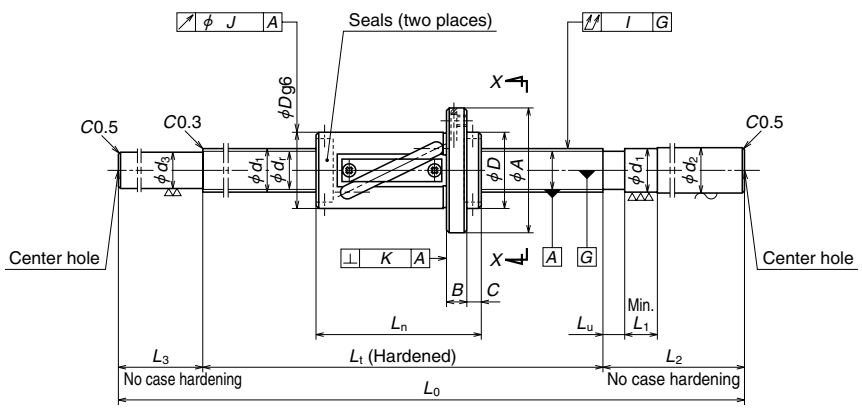

Nut type code: LSFT

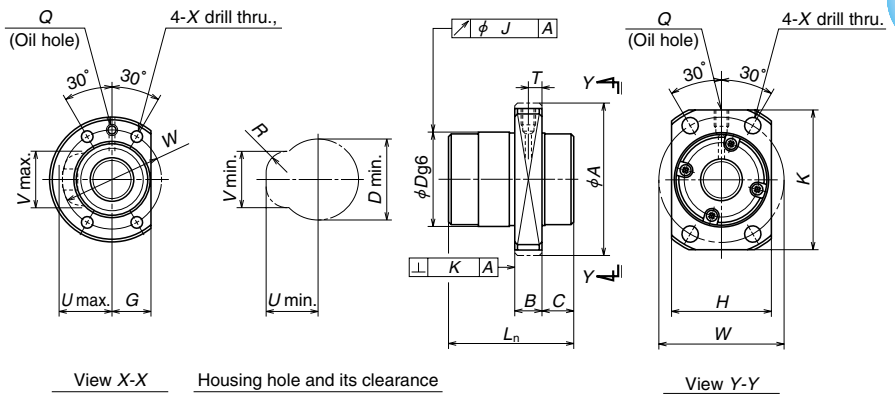

Nut type code: USFC

Unit: mm

Ball screw No.	Stroke Max. L_t-L_n	Screw shaft dia. d_1	Lead l	Ball dia. D_w	Ball circle dia. d_m	Root dia. d_r	Effective ball turns: Turns × Circuits	Basic load rating (N): Dynamic C_a	Basic load rating (N): Static C_{0a}	Axial play Max.	Nut: Nut type code	Nut: Outside dia. D	Nut: Flange A	Nut: Flange G	Nut: Flange H	Nut: Flange K	Nut: Flange B	Nut: Flange C	Nut: Overall length L_n
W2513FS-1-C5T20	1254	25	20	4.762	26.25	21.3	2.5×1	15700	32800	0.005	LSFT	44	71	23	—	—	12	8	96
W2521FS-1-C5T20	2054																		
W2513FS-2-C5T25	1260	25	25	4.762	26.25	21.3	1.5×1	10100	19100	0.005	LSFT	44	71	23	—	—	12	10	90
W2521FS-2-C5T25	2060																		
W2515FS-1GX-C5T50	1450	25	50	3.969	26	21.9	0.7×2	6700	13500	0.005	USFC	46	70	—	48	63	12	13	50
W2521FS-3GX-C5T50	2100																		

dimensions: Bolt hole W	Bolt hole X	Bolt hole U	Projecting tube V	Projecting tube R	Oil hole Q	Oil hole T	Screw shaft dimensions: Threaded length L_t	Shaft end, right d_2	Shaft end, right L_u	Shaft end, right L_1	Shaft end, left L_2	Shaft end, left d_3	Shaft end, left L_3	Overall length L_0	Lead accuracy T	Deviation e_p	Variation v_u	Run out: Shaft straightness I	Run out: Nut O.D. eccentricity J	Run out: Flange perpendicularity K	Mass (Kg)	Permissible rotational speed N(min⁻¹)
57	6.6	31	35	12	M6×1	—	1350	25.2	13	70	200	21.3	100	1650	0	0.054	0.035	0.120	0.015	0.011	6.8	2800
							2150							2450		0.077	0.046	0.160			9.8	
57	6.6	32	34	12	M6×1	—	1350	25.2	15	70	200	21.3	100	1650	0	0.054	0.035	0.120	0.015	0.011	6.8	2800
							2150							2450		0.077	0.046	0.160			9.8	
58	6.6	—	—	—	M6×1	6	1500	25.2	26	70	200	21.9	100	1800	0	0.054	0.035	0.120	0.015	0.011	7.3	2800
							2150							2450		0.077	0.046	0.160			9.8	

Remarks: 1. NSK support unit is recommended.
2. Only rust preventive agent is applied at time of delivery. Please apply lubricant (oil or grease) before use.
3. Permissible rotational speed is determined by a d · n value and a critical speed. See page B509.

www.bergab.ru Берг АБ bergab@ya.ru Тел. (495)-228-06-21, факс (495) 223-3071

www.bergab.ru Берг АБ bergab@ya.ru Тел. (495)-228-06-21, факс (495) 223-3071

φ25×10、φ28×5、φ28×6

Standard stock

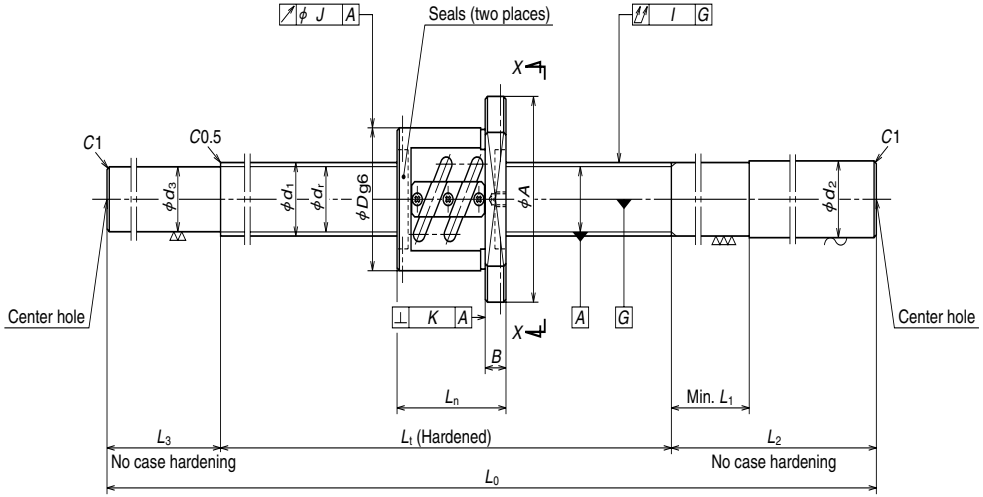

Nut type code: PFT

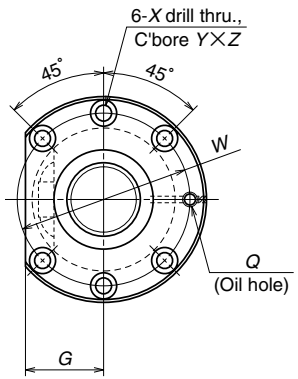

View X-X

B 208

Unit: mm

Ball screw No.	Stroke Max. L_t-L_n	Screw shaft dia. d_1	Lead l	Ball dia. D_w	Ball circle dia. d_m	Root dia. d_r	Effective ball turns: Turns × Circuits	Basic load rating (N): Dynamic C_a	Basic load rating (N): Static C_{0a}	Preload (N)	Dynamic friction torque, median (N · cm)	Nut: Outside dia. D	Nut: Flange A	Nut: Flange G	Nut: Flange B	Nut: Overall length L_n
W2504SS-2P-C5Z10	319	25	10	4.762	25.5	20.5	1.5×2	11600	19000	590	13.8	58	85	32	15	81
W2507SS-1P-C5Z10	619															
W2510SS-2P-C5Z10	919															
W2515SS-1P-C5Z10	1419															
W2804SS-1P-C5Z5	344	28	5	3.175	28.5	25.2	2.5×2	11000	24400	540	9.8	55	85	31	12	56
W2806SS-1P-C5Z5	544															
W2808SS-1P-C5Z5	744															
W2812SS-1P-C5Z5	1144															
W2804SS-3P-C5Z6	337	28	6	3.175	28.5	25.2	2.5×2	11000	24400	540	10.8	55	85	31	12	63
W2806SS-3P-C5Z6	537															
W2808SS-3P-C5Z6	737															
W2812SS-3P-C5Z6	1137															

Ball screw No.	dimensions: Bolt hole W	Bolt hole X	Bolt hole Y	Bolt hole Z	Oil hole Q	Screw shaft dimensions: Threaded length L_t	Shaft end, right d_2	Shaft end, right L_1	Shaft end, right L_2	Shaft end, left d_3	Shaft end, left L_3	Overall length L_0	Lead accuracy: Travel compensation T	Deviation e_p	Variation v_u	Run out: Shaft straightness I	Nut O.D. eccentricity J	Flange perpendicularity K	Mass (Kg)	Permissible rotational speed N(min⁻¹)
W2504SS-2P-C5Z10	71	6.6	11	6.5	M6×1	400	25.2	60	200	20.5	50	650	–0.010	0.025	0.020	0.060	0.019	0.013	3.8	2800
W2507SS-1P-C5Z10						700			250		100	1050	–0.017	0.035	0.025	0.090			5.1	
W2510SS-2P-C5Z10						1000			250		100	1350	–0.024	0.040	0.027	0.120			6.1	
W2515SS-1P-C5Z10						1500			300		100	1900	–0.036	0.054	0.035	0.150			8.0	
W2804SS-1P-C5Z5	69	6.6	11	6.5	M6×1	400	28.2	40	200	25.2	—	600	–0.010	0.025	0.020	0.050	0.019	0.013	3.7	2500
W2806SS-1P-C5Z5						600			250		100	950	–0.014	0.030	0.023	0.075			5.2	
W2808SS-1P-C5Z5						800			250		100	1150	–0.019	0.035	0.025	0.090			6.1	
W2812SS-1P-C5Z5						1200			300		100	1600	–0.029	0.046	0.030	0.120			8.1	
W2804SS-3P-C5Z6	69	6.6	11	6.5	M6×1	400	28.2	40	200	25.2	—	600	–0.010	0.025	0.020	0.050	0.019	0.013	3.8	2500
W2806SS-3P-C5Z6						600			250		100	950	–0.014	0.030	0.023	0.075			5.3	
W2808SS-3P-C5Z6						800			250		100	1150	–0.019	0.035	0.025	0.090			6.2	
W2812SS-3P-C5Z6						1200			300		100	1600	–0.029	0.046	0.030	0.120			8.2	

Remarks: 1. NSK support unit is recommended.
2. Only rust preventive agent is applied at time of delivery. Please apply lubricant (oil or grease) before use.
3. Permissible rotational speed is determined by a d · n value and a critical speed. See page B509.

www.bergab.ru Берг АБ bergab@ya.ru Тел. (495)-228-06-21, факс (495) 223-3071

www.bergab.ru Берг АБ bergab@ya.ru Тел. (495)-228-06-21, факс (495) 223-3071

φ28×5、φ28×6

Standard stock

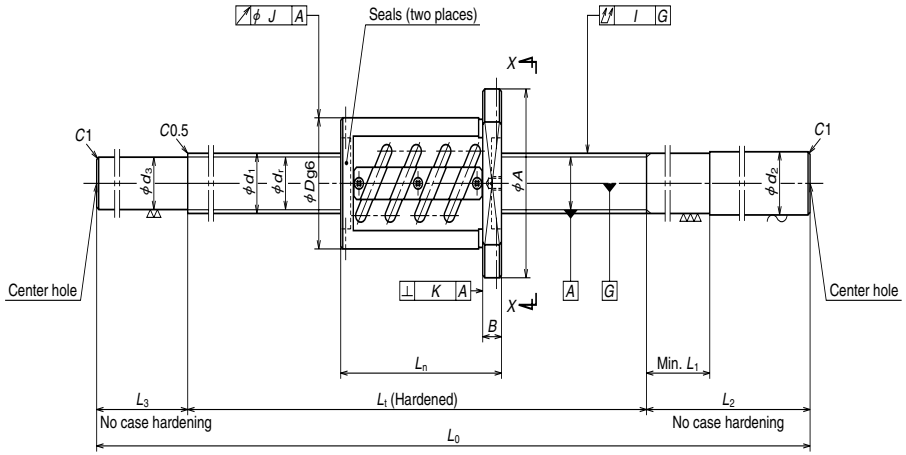

Nut type code: ZFT

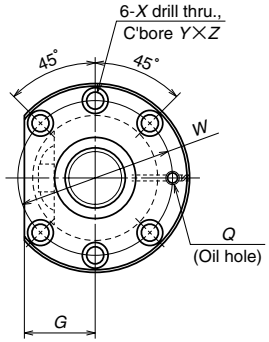

View X-X

B 210

Unit: mm

Ball screw No.	Stroke Max. L_t-L_n	Screw shaft dia. d_1	Lead l	Ball dia. D_w	Ball circle dia. d_m	Root dia. d_r	Effective ball turns: Turns × Circuits	Basic load rating (N): Dynamic C_a	Basic load rating (N): Static C_{0a}	Preload (N)	Dynamic friction torque, median (N · cm)	Nut: Outside dia. D	Nut: Flange A	Nut: Flange G	Nut: Flange B	Nut: Overall length L_n
W2804SS-2Z-C5Z5	314	28	5	3.175	28.5	25.2	2.5×2	17400	48800	1225	21.5	55	85	31	12	86
W2806SS-2Z-C5Z5	514															
W2808SS-2Z-C5Z5	714															
W2812SS-2Z-C5Z5	1114															
W2804SS-4Z-C5Z6	301	28	6	3.175	28.5	25.2	2.5×2	17400	48800	1225	22.5	55	85	31	12	99
W2806SS-4Z-C5Z6	501															
W2808SS-4Z-C5Z6	701															
W2812SS-4Z-C5Z6	1101															

dimensions: Bolt hole W	Bolt hole X	Bolt hole Y	Bolt hole Z	Oil hole Q	Screw shaft dimensions: Threaded length L_t	Shaft end, right d_2	Shaft end, right L_1	Shaft end, right L_2	Shaft end, left d_3	Shaft end, left L_3	Overall length L_0	Lead accuracy: Travel compensation T	Lead accuracy: Deviation e_p	Lead accuracy: Variation v_u	Run out: Shaft straightness I	Run out: Nut O.D. eccentricity J	Run out: Flange perpendicularity K	Mass (Kg)	Permissible rotational speed N(min⁻¹)
69	6.6	11	6.5	M6×1	400	28.2	40	200	25.2	—	600	–0.010	0.025	0.020	0.050	0.019	0.013	4.7	2500
					600			250		100	950	–0.014	0.030	0.023	0.075			5.5	
					800			250		100	1150	–0.019	0.035	0.025	0.090			6.4	
					1200			300		100	1600	–0.029	0.046	0.030	0.120			8.4	
69	6.6	11	6.5	M6×1	400	28.2	40	200	25.2	—	600	–0.010	0.025	0.020	0.050	0.019	0.013	4.2	2500
					600			250		100	950	–0.014	0.030	0.023	0.075			5.7	
					800			250		100	1150	–0.019	0.035	0.025	0.090			6.6	
					1200			300		100	1600	–0.029	0.046	0.030	0.120			8.6	

Remarks: 1. NSK support unit is recommended.
2. Only rust preventive agent is applied at time of delivery. Please apply lubricant (oil or grease) before use.
3. Permissible rotational speed is determined by a d · n value and a critical speed. See page B509.

www.bergab.ru Берг АБ bergab@ya.ru Тел. (495)-228-06-21, факс (495) 223-3071

www.bergab.ru Берг АБ bergab@ya.ru Тел. (495)-228-06-21, факс (495) 223-3071

φ32×5、φ32×6

Standard stock

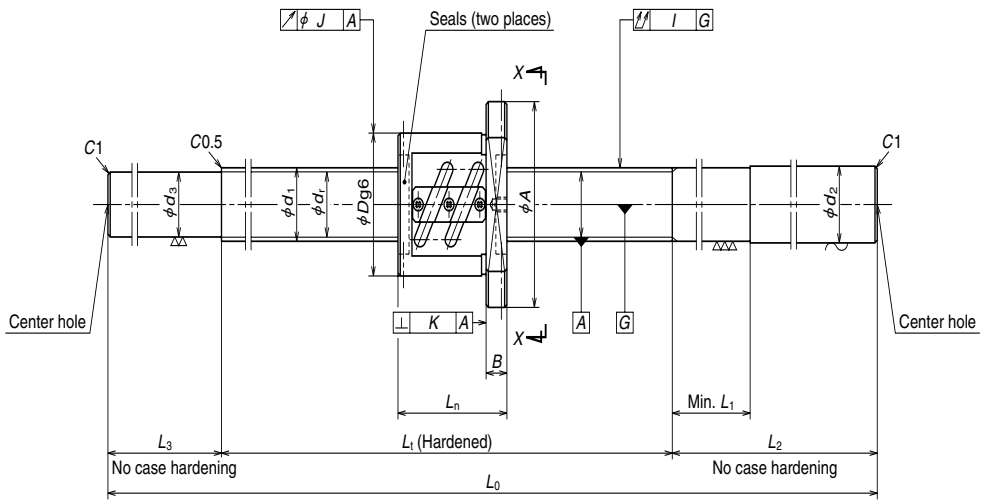

Nut type code: PFT

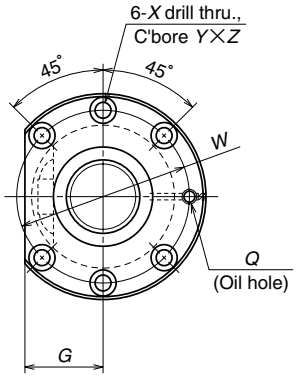

View X-X

Unit: mm

Ball screw No.	Stroke Max. L_t-L_n	Screw shaft dia. d_1	Lead l	Ball dia. D_w	Ball circle dia. d_m	Root dia. d_r	Effective ball turns: Turns × Circuits	Basic load rating (N): Dynamic C_a	Basic load rating (N): Static C_{0a}	Preload (N)	Dynamic friction torque, median (N · cm)	Nut: Outside dia. D	Nut: Flange A	Nut: Flange G	Nut: Flange B	Nut: Overall length L_n
W3204SS-1P-C5Z5	344	32	5	3.175	32.5	29.2	2.5×2	11600	28000	590	10.8	58	85	32	12	56
W3206SS-1P-C5Z5	544															
W3208SS-1P-C5Z5	744															
W3212SS-1P-C5Z5	1144															
W3215SS-1P-C5Z5	1444															
W3206SS-3P-C5Z6	537	32	6	3.969	32.5	28.4	2.5×2	15500	34700	780	15.6	62	89	34	12	63
W3210SS-1P-C5Z6	937															
W3215SS-3P-C5Z6	1437															

dimensions: Bolt hole W	Bolt hole X	Bolt hole Y	Bolt hole Z	Oil hole Q	Screw shaft dimensions: Threaded length L_t	Shaft end, right d_2	Shaft end, right L_1	Shaft end, right L_2	Shaft end, left d_3	Shaft end, left L_3	Overall length L_0	Lead accuracy: Travel compensation T	Lead accuracy: Deviation e_p	Lead accuracy: Variation v_u	Run out: Shaft straightness I	Run out: Nut O.D. eccentricity J	Run out: Flange perpendicularity K	Mass (Kg)	Permissible rotational speed N(min⁻¹)
71	6.6	11	6.5	M6×1	400	32.3	40	200	29.2	50	650	-0.010	0.025	0.020	0.060	0.019	0.013	4.8	2180
					600			250		100	950	-0.014	0.030	0.023	0.075			6.5	
					800			250		100	1150	-0.019	0.035	0.025	0.090			7.7	
					1200			300		100	1600	-0.029	0.046	0.030	0.120			10.3	
					1500			300		100	1900	-0.036	0.054	0.035	0.150			12.1	
75	6.6	11	6.5	M6×1	600	32.3	40	250	28.4	100	950	-0.014	0.030	0.023	0.075	0.019	0.013	6.7	2180
					1000			300			1400	-0.024	0.040	0.027	0.120			9.2	
					1500			300			1900	-0.036	0.054	0.035	0.150			12.1	

Remarks: 1. NSK support unit is recommended.
2. Only rust preventive agent is applied at time of delivery. Please apply lubricant (oil or grease) before use.
3. Permissible rotational speed is determined by a d · n value and a critical speed. See page B509.

www.bergab.ru Берг АБ bergab@ya.ru Тел. (495)-228-06-21, факс (495) 223-3071

www.bergab.ru Берг АБ bergab@ya.ru Тел. (495)-228-06-21, факс (495) 223-3071

φ32×5、φ32×6、φ32×8

Standard stock

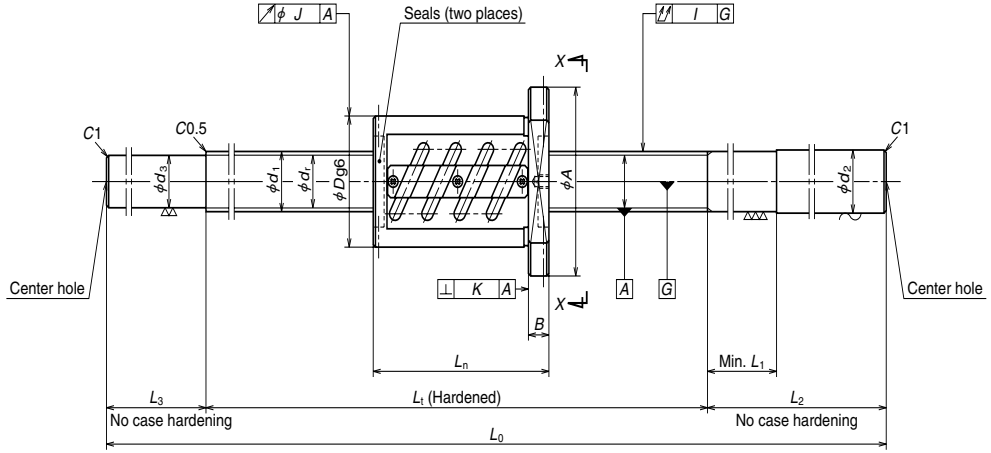

Nut type code: ZFT

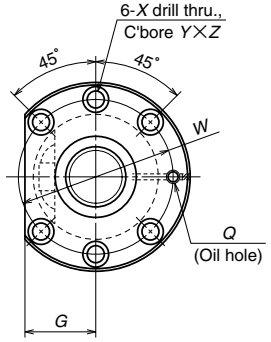

View X-X

Unit: mm

Ball screw No.	Stroke Max. L_t-L_n	Screw shaft dia. d_1	Lead l	Ball dia. D_w	Ball circle dia. d_m	Root dia. d_r	Effective tall turns Turns × Circuits	Basic load rating (N) Dynamic C_a	Static C_{0a}	Preload (N)	Dynamic friction torque, median (N・cm)	Nut Outside dia. D	Flange A	G	B	Overall length L_n
W3204SS-2Z-C5Z5	314	32	5	3.175	32.5	29.2	2.5×2	18500	56100	1270	22.5	58	85	32	12	86
W3206SS-2Z-C5Z5	514															
W3208SS-2Z-C5Z5	714															
W3212SS-2Z-C5Z5	1114															
W3215SS-2Z-C5Z5	1414															
W3206SS-4Z-C5Z6	501	32	6	3.969	32.5	28.4	2.5×2	24700	69400	1720	34.5	62	89	34	12	99
W3210SS-2Z-C5Z6	901															
W3215SS-4Z-C5Z6	1401															
W3206SS-5Z-C5Z8	518	32	8	4.762	32.5	27.5	2.5×1	17500	41000	1320	30.5	66	100	38	15	82
W3210SS-3Z-C5Z8	918															
W3215SS-5Z-C5Z8	1418															

dimensions Bolt hole W	X	Y	Z	Oil hole Q	Screw shaft dimensions Threaded length L_t	Shaft end, right d_2	L_1	L_2	Shaft end, left d_3	L_3	Overall length L_0	Lead accuracy Travel compensation T	Deviation e_p	Variation υ_u	Run out Shaft straightness I	Nut O.D. eccentricity J	Flange perpendicularity K	Mass (Kg)	Permissible rotational speed N(min⁻¹)
71	6.6	11	6.5	M6×1	400	32.3	40	200	29.2	50	650	-0.010	0.025	0.020	0.060	0.019	0.013	5.1	2180
					600			250		100	950	-0.014	0.030	0.023	0.075			6.9	
					800			250		100	1150	-0.019	0.035	0.025	0.090			8.0	
					1200			300		100	1600	-0.029	0.046	0.030	0.120			10.1	
					1500			300		100	1900	-0.036	0.054	0.035	0.150			12.4	
75	6.6	11	6.5	M6×1	600	32.3	40	250	28.4	100	950	-0.014	0.030	0.023	0.075	0.019	0.013	7.1	2180
					1000			300			1400	-0.024	0.040	0.027	0.120			9.7	
					1500			300			1900	-0.036	0.054	0.035	0.150			12.6	
82	9	14	8.5	M6×1	600	32.3	50	250	27.5	100	950	-0.014	0.030	0.023	0.075	0.019	0.013	7.3	2180
					1000			300			1400	-0.024	0.040	0.027	0.120			9.8	
					1500			300			1900	-0.036	0.054	0.035	0.150			12.6	

Remarks: 1. NSK support unit is recommended.
2. Only rust preventive agent is applied at time of delivery. Please apply lubricant (oil or grease) before use.
3. Permissible rotational speed is determined by a d・n value and a critical speed. See page B509.

www.bergab.ru Берг АБ bergab@ya.ru Тел. (495)-228-06-21, факс (495) 223-3071

www.bergab.ru Берг АБ bergab@ya.ru Тел. (495)-228-06-21, факс (495) 223-3071

φ32×5、φ32×10

Standard stock

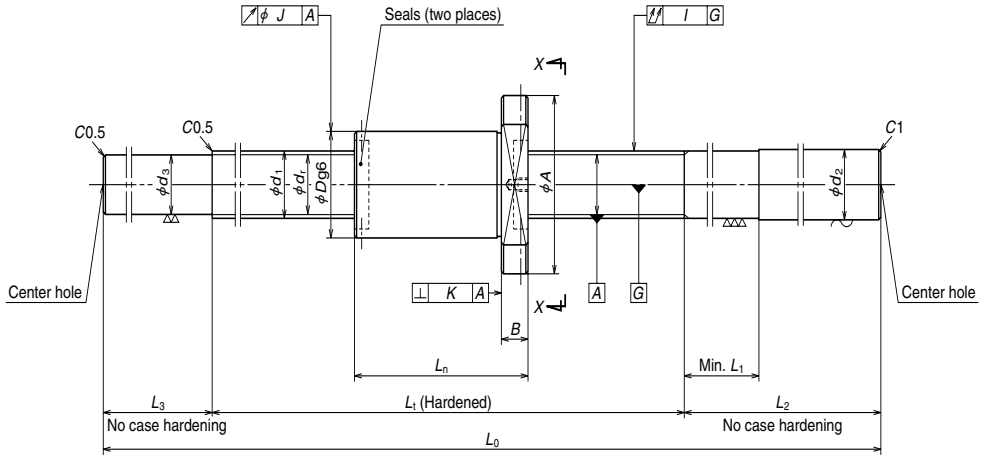

Nut type code: ZFD

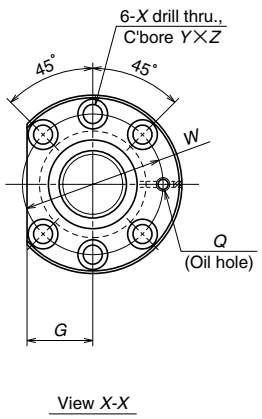

Unit: mm

Ball screw No.	Stroke Max. L_t-L_n	Screw shaft dia. d_1	Lead l	Ball dia. D_w	Ball circle dia. d_m	Root dia. d_r	Effective ball turns: Turns × Circuits	Basic load rating (N): Dynamic C_a	Basic load rating (N): Static C_{0a}	Preload (N)	Dynamic friction torque, median (N · cm)	Nut: Outside dia. D	Nut: Flange A	Nut: Flange G	Nut: Flange B	Nut: Overall length L_n
W3204SS-3ZY-C5Z5	323	32	5	3.175	32.75	29.4	4	14200	40700	1080	19.6	48	75	29	12	77
W3206SS-6ZY-C5Z5	523															
W3209SS-1ZY-C5Z5	823															
W3212SS-3ZY-C5Z5	1123															
W3216SS-1ZY-C5Z5	1523															
W3205SS-3ZY-C5Z10	380	32	10	6.35	33.75	27.1	3	25900	52800	1860	49.0	54	88	34	15	120
W3207SS-3ZY-C5Z10	580															
W3210SS-6ZY-C5Z10	880															
W3214SS-3ZY-C5Z10	1280															
W3218SS-3ZY-C5Z10	1680															

dimensions: Bolt hole W	Bolt hole X	Bolt hole Y	Bolt hole Z	Oil hole Q	Screw shaft dimensions: Threaded length L_t	Shaft end, right d_2	Shaft end, right L_1	Shaft end, right L_2	Shaft end, left d_3	Shaft end, left L_3	Overall length L_0	Lead accuracy: Travel compensation T	Lead accuracy: Deviation e_p	Lead accuracy: Variation υ_u	Run out: Shaft straightness I	Run out: Nut O.D. eccentricity J	Run out: Flange perpendicularity K	Mass (Kg)	Permissible rotational speed N(min⁻¹)
61	6.6	11	6.5	M6×1	400	32.3	40	200	29.4	50	650	-0.009	0.025	0.020	0.060	0.015	0.011	4.6	2180
					600			250		100	950	-0.013	0.030	0.023	0.075			6.4	
					900			250		100	1250	-0.021	0.040	0.027	0.090			8.1	
					1200			300		100	1600	-0.028	0.046	0.030	0.120			10.2	
					1600			300		100	2000	-0.037	0.054	0.035	0.150			12.6	
70	9	14	8.5	M6×1	500	32.3	60	250	27.1	100	850	-0.010	0.027	0.020	0.075	0.019	0.013	6.2	2180
					700			250		100	1050	-0.015	0.035	0.025	0.090			7.3	
					1000			300		100	1400	-0.022	0.040	0.027	0.120			9.3	
					1400			350		120	1870	-0.032	0.054	0.035	0.150			11.9	
					1800			350		120	2270	-0.041	0.065	0.040	0.200			14.1	

Remarks: 1. NSK support unit is recommended.
2. Only rust preventive agent is applied at time of delivery. Please apply lubricant (oil or grease) before use.
3. Permissible rotational speed is determined by a d · n value and a critical speed. See page B509.

www.bergab.ru Берг АБ bergab@ya.ru Тел. (495)-228-06-21, факс (495) 223-3071

www.bergab.ru Берг АБ bergab@ya.ru Тел. (495)-228-06-21, факс (495) 223-3071

φ32×10、φ36×10、φ40×5

Standard stock

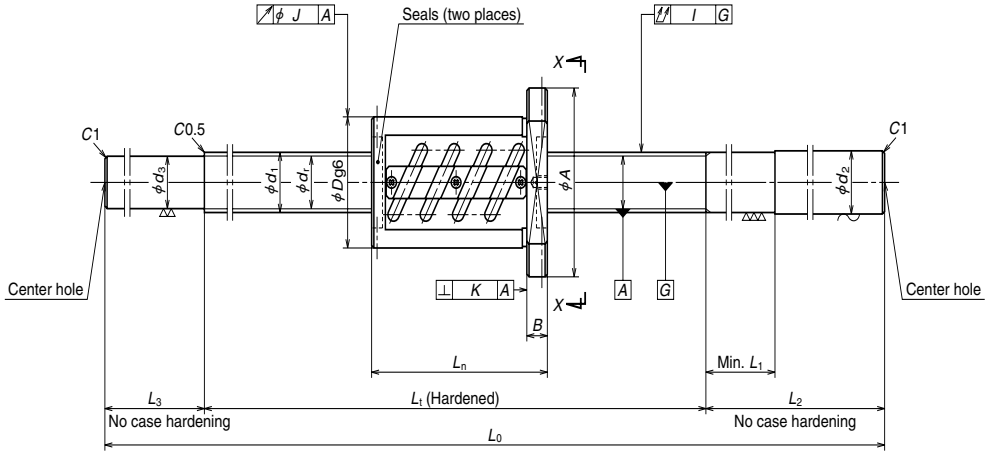

Nut type code: ZFT

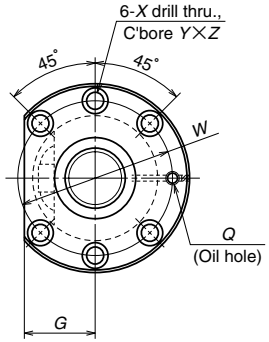

View X-X

B 218

Unit: mm

Ball screw No.	Stroke Max. L_t-L_n	Screw shaft dia. d_1	Lead l	Ball dia. D_w	Ball circle dia. d_m	Root dia. d_r	Effective ball turns: Turns × Circuits	Basic load rating (N): Dynamic C_a	Basic load rating (N): Static C_{0a}	Preload (N)	Dynamic friction torque, median (N · cm)	Nut: Outside dia. D	Nut: Flange A	Nut: Flange G	Nut: Flange B	Nut: Overall length L_n
W3205SS-1Z-C5Z10	400	32	10	6.350	33	26.4	2.5×1	25500	54000	1960	50	74	108	41	15	100
W3207SS-1Z-C5Z10	600															
W3210SS-4Z-C5Z10	900															
W3214SS-1Z-C5Z10	1300															
W3218SS-1Z-C5Z10	1700															
W3607SS-1Z-C5Z10	597	36	10	6.350	37	30.4	2.5×1	27200	61300	2060	56	75	120	45	18	103
W3612SS-1Z-C5Z10	1097															
W3620SS-1Z-C5Z10	1897															
W4006SS-1Z-C5Z5	511	40	5	3.175	40.5	37.2	2.5×2	20200	70600	1420	28.5	67	101	39	15	89
W4010SS-1Z-C5Z5	911															
W4016SS-1Z-C5Z5	1511															

dimensions: Bolt hole W	Bolt hole X	Bolt hole Y	Bolt hole Z	Oil hole Q	Screw shaft dimensions: Threaded length L_t	Shaft end, right d_2	Shaft end, right L_1	Shaft end, right L_2	Shaft end, left d_3	Shaft end, left L_3	Overall length L_0	Lead accuracy: Travel compensation T	Lead accuracy: Deviation e_p	Lead accuracy: Variation v_u	Run out: Shaft straightness I	Run out: Nut O.D. eccentricity J	Run out: Flange perpendicularity K	Mass (Kg)	Permissible rotational speed N(min⁻¹)
90	9	14	8.5	M6×1	500	32.3	60	250	26.4	100	850	-0.012	0.027	0.020	0.075	0.019	0.013	7.5	2180
					700			250		100	1050	-0.017	0.035	0.025	0.090			8.5	
					1000			300		100	1400	-0.024	0.040	0.027	0.120			10.5	
					1400			350		120	1870	-0.034	0.054	0.035	0.150			13.1	
					1800			350		120	2270	-0.043	0.065	0.040	0.200			15.2	
98	11	17.5	11	M6×1	700	36.3	60	300	30.4	100	1100	-0.017	0.035	0.025	0.065	0.019	0.013	10.9	1940
					1200			350		120	1670	-0.029	0.046	0.030	0.100			14.9	
					2000			350		120	2470	-0.048	0.065	0.040	0.130			20.4	
83	9	14	8.5	Rc1/8	600	40.3	50	300	37.2	100	1000	-0.014	0.030	0.023	0.050	0.019	0.013	11.1	1750
					1000			300			1400	-0.024	0.040	0.027	0.080			14.8	
					1600			350			2050	-0.038	0.054	0.035	0.130			20.8	

Remarks: 1. NSK support unit is recommended.
2. Only rust preventive agent is applied at time of delivery. Please apply lubricant (oil or grease) before use.
3. Permissible rotational speed is determined by a d · n value and a critical speed. See page B509.

www.bergab.ru Берг АБ bergab@ya.ru Тел. (495)-228-06-21, факс (495) 223-3071

www.bergab.ru Берг АБ bergab@ya.ru Тел. (495)-228-06-21, факс (495) 223-3071

Standard stock

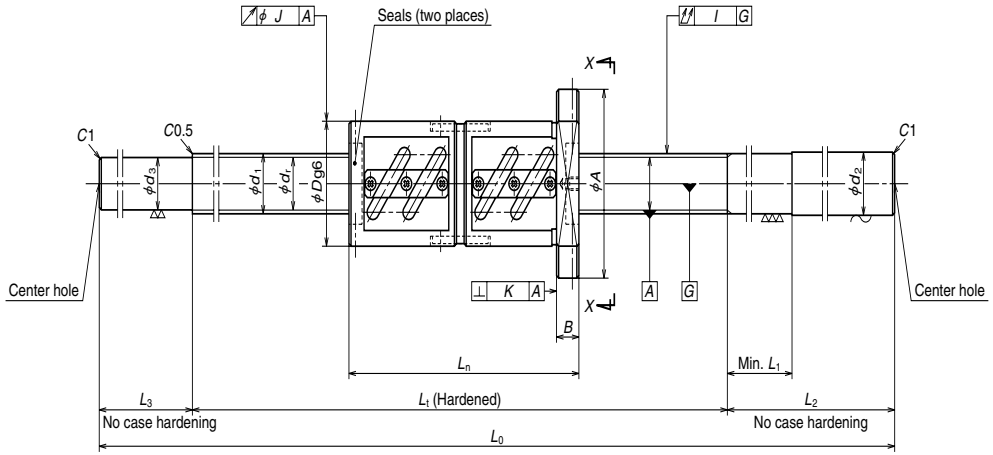

Nut type code: DFT

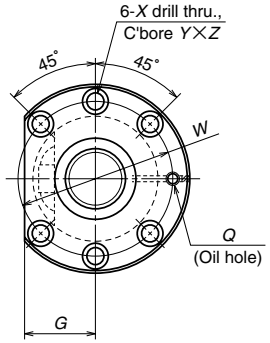

View X-X

B 220

Unit: mm

Ball screw No.	Stroke Max. L_t-L_n	Screw shaft dia. d_1	Lead l	Ball dia. D_w	Ball circle dia. d_m	Root dia. d_r	Effective ball turns: Turns × Circuits	Basic load rating (N): Dynamic C_a	Basic load rating (N): Static C_{0a}	Preload (N)	Dynamic friction torque, median (N · cm)	Nut: Outside dia. D	Nut: Flange A	Nut: Flange G	Nut: Flange B	Nut: Overall length L_n
W3205SS-2D-C5Z10	310	32	10	6.350	33	26.4	2.5×2	46300	108000	3240	83	74	108	41	15	190
W3207SS-2D-C5Z10	510															
W3210SS-5D-C5Z10	810															
W3214SS-2D-C5Z10	1210															
W3218SS-2D-C5Z10	1610															
W3607SS-2D-C5Z10	507	36	10	6.350	37	30.4	2.5×2	49300	123000	3430	93	75	120	45	18	193
W3612SS-2D-C5Z10	1007															
W3620SS-2D-C5Z10	1807															

dimensions: Bolt hole W	Bolt hole X	Bolt hole Y	Bolt hole Z	Oil hole Q	Screw shaft dimensions: Threaded length L_t	Shaft end, right d_2	Shaft end, right L_1	Shaft end, right L_2	Shaft end, left d_3	Shaft end, left L_3	Overall length L_0	Lead accuracy: Travel compensation T	Lead accuracy: Deviation e_p	Lead accuracy: Variation υ_u	Run out: Shaft straightness I	Run out: Nut O.D. eccentricity J	Run out: Flange perpendicularity K	Mass (Kg)	Permissible rotational speed N(min⁻¹)
90	9	14	8.5	M6×1	500	32.3	60	250	26.4	100	850	-0.012	0.027	0.020	0.075	0.019	0.013	9.5	2180
					700			250		100	1050	-0.017	0.035	0.025	0.090			10.6	
					1000			300		100	1400	-0.024	0.040	0.027	0.120			12.5	
					1400			350		120	1870	-0.034	0.054	0.035	0.150			15.1	
					1800			350		120	2270	-0.043	0.065	0.040	0.200			17.2	
98	11	17.5	11	M6×1	700	36.3	60	300	30.4	100	1100	-0.017	0.035	0.025	0.065	0.019	0.013	12.8	1940
					1200			350		120	1670	-0.029	0.046	0.030	0.100			16.8	
					2000			350		120	2470	-0.048	0.065	0.040	0.130			22.3	

Remarks: 1. NSK support unit is recommended.
2. Only rust preventive agent is applied at time of delivery. Please apply lubricant (oil or grease) before use.
3. Permissible rotational speed is determined by a d · n value and a critical speed. See page B509.

www.bergab.ru Берг АБ bergab@ya.ru Тел. (495)-228-06-21, факс (495) 223-3071

www.bergab.ru Берг АБ bergab@ya.ru Тел. (495)-228-06-21, факс (495) 223-3071

φ32×25、φ32×32

Standard stock

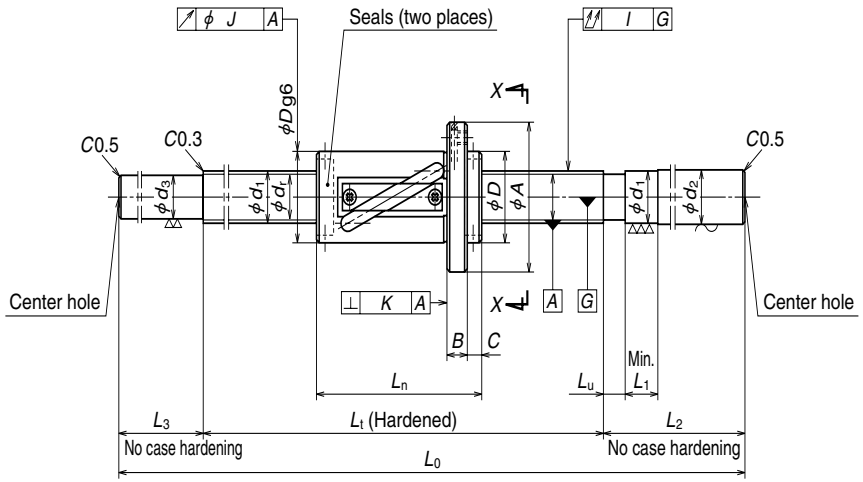

Nut type code: LSFT

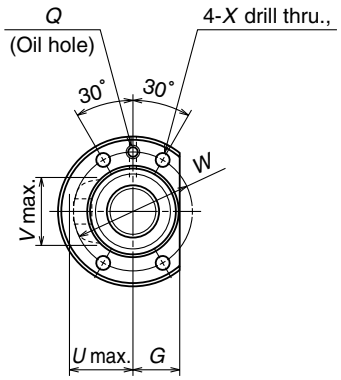

View X-X

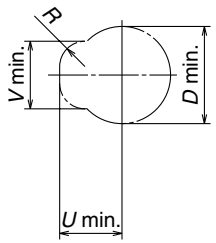

Housing hole and its clearance

Unit: mm

Ball screw No.	Stroke Max. L_t-L_n	Screw shaft dia. d_1	Lead l	Ball dia. D_w	Ball circle dia. d_m	Root dia. d_r	Effective ball turns: Turns × Circuits	Basic load rating (N) Dynamic C_a	Basic load rating (N) Static C_{0a}	Axial play Max.	Nut: Outside dia. D	Nut: Flange A	Nut: Flange G	Nut: Flange B	Nut: Flange C	Nut: Overall length L_n
W3217FS-1-C5T25	1583	32	25	4.762	33.25	28.3	2.5×1	17900	41800	0.005	51	85	26	15	10	117
W3227FS-1-C5T25	2583															
W3217FS-2-C5T32	1591	32	32	4.762	33.25	28.3	1.5×1	11500	24800	0.005	51	85	26	15	12	109
W3227FS-2-C5T32	2591															

dimensions: Bolt hole W	dimensions: Bolt hole X	dimensions: Projecting tube U	dimensions: Projecting tube V	dimensions: Projecting tube R	dimensions: Oil hole Q	Screw shaft dimensions: Threaded length L_t	Screw shaft dimensions: Shaft end, right d_2	Screw shaft dimensions: Shaft end, right L_u	Screw shaft dimensions: Shaft end, right L_1	Screw shaft dimensions: Shaft end, left L_2	Screw shaft dimensions: Shaft end, left d_3	Screw shaft dimensions: Shaft end, left L_3	Screw shaft dimensions: Overall length L_0	Lead accuracy: Travel compensation T	Lead accuracy: Deviation e_p	Lead accuracy: Variation v_u	Run out: Shaft straightness I	Run out: Nut O.D. eccentricity J	Run out: Flange perpendicularity K	Mass (Kg)	Permissible rotational speed N(min⁻¹)
67	9	34	42	12	M6×1	1700	32.3	15	70	250	28.3	120	2070	0	0.065	0.040	0.160	0.019	0.013	13.8	2180
						2700							3070		0.093	0.054	0.210			20.0	
67	9	34	42	12	M6×1	1700	32.3	19	70	250	28.3	120	2070	0	0.065	0.040	0.160	0.019	0.013	13.9	2180
						2700							3070		0.093	0.054	0.210			20.0	

Remarks: 1. NSK support unit is recommended.
2. Only rust preventive agent is applied at time of delivery. Please apply lubricant (oil or grease) before use.
3. Permissible rotational speed is determined by a d · n value and a critical speed. See page B509.

www.bergab.ru Берг АБ bergab@ya.ru Тел. (495)-228-06-21, факс (495) 223-3071

www.bergab.ru Берг АБ bergab@ya.ru Тел. (495)-228-06-21, факс (495) 223-3071

φ40×8、φ40×10、φ40×12

Standard stock

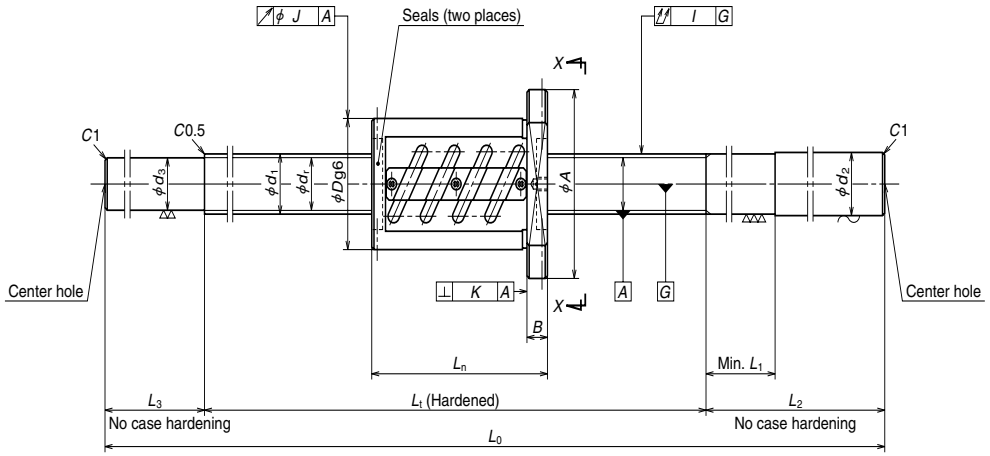

Nut type code: ZFT

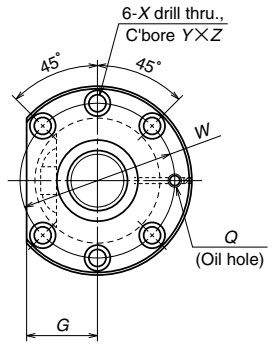

View X-X

Unit: mm

Ball screw No.	Stroke Max. L_t-L_n	Screw shaft dia. d_1	Lead l	Ball dia. D_w	Ball circle dia. d_m	Root dia. d_r	Effective ball turns: Turns × Circuits	Basic load rating (N): Dynamic C_a	Basic load rating (N): Static C_{0a}	Preload (N)	Dynamic friction torque, median (N · cm)	Nut: Outside dia. D	Nut: Flange A	Nut: Flange G	Nut: Flange B	Nut: Overall length L_n
W4007SS-1Z-C5Z8	570	40	8	4.762	40.5	35.5	2.5×2	34900	103000	2450	64	74	108	41	15	130
W4012SS-1Z-C5Z8	1070															
W4018SS-1Z-C5Z8	1670															
W4007SS-2Z-C5Z10	597	40	10	6.350	41	34.4	2.5×1	28600	68600	2160	64	82	124	47	18	103
W4010SS-2Z-C5Z10	897															
W4014SS-1Z-C5Z10	1297															
W4018SS-2Z-C5Z10	1697															
W4024SS-1Z-C5Z10	2297															
W4010SS-4Z-C5Z12	883	40	12	7.144	41.5	34.1	2.5×1	33600	77500	2550	83	86	128	48	18	117
W4016SS-2Z-C5Z12	1483															
W4025SS-1Z-C5Z12	2383															

dimensions: Bolt hole W	Bolt hole X	Bolt hole Y	Bolt hole Z	Oil hole Q	Screw shaft dimensions: Threaded length L_t	Shaft end, right d_2	Shaft end, right L_1	Shaft end, right L_2	Shaft end, left d_3	Shaft end, left L_3	Overall length L_0	Lead accuracy: Travel compensation T	Lead accuracy: Deviation e_p	Lead accuracy: Variation v_u	Run out: Shaft straightness I	Run out: Nut O.D. eccentricity J	Run out: Flange perpendicularity K	Mass (Kg)	Permissible rotational speed N(min⁻¹)
90	9	14	8.5	Rc1/8	700	40.3	50	300	35.5	100	1100	–0.017	0.035	0.025	0.065	0.019	0.013	13.0	1750
					1200			350		100	1650	–0.029	0.046	0.030	0.100			18.0	
					1800			350		120	2270	–0.043	0.065	0.040	0.130			23.5	
102	11	17.5	11	Rc1/8	700	40.3	60	300	34.4	100	1100	–0.017	0.035	0.025	0.065	0.025	0.015	13.3	1750
					1000			300		100	1400	–0.024	0.040	0.027	0.080			15.9	
					1400			350		120	1870	–0.034	0.054	0.035	0.100			20.0	
					1800			350		120	2270	–0.043	0.065	0.040	0.130			23.4	
					2400			400		150	2950	–0.058	0.077	0.046	0.170			29.4	
106	11	17.5	11	Rc1/8	1000	40.3	70	300	34.1	100	1400	–0.024	0.040	0.027	0.080	0.025	0.015	16.7	1750
					1600			350		150	2100	–0.038	0.054	0.035	0.130			22.9	
					2500			400		150	3050	–0.060	0.077	0.046	0.170			31.1	

Remarks: 1. NSK support unit is recommended.
2. Only rust preventive agent is applied at time of delivery. Please apply lubricant (oil or grease) before use.
3. Permissible rotational speed is determined by a d · n value and a critical speed. See page B509.

www.bergab.ru Берг АБ bergab@ya.ru Тел. (495)-228-06-21, факс (495) 223-3071

www.bergab.ru Берг АБ bergab@ya.ru Тел. (495)-228-06-21, факс (495) 223-3071

φ40×10、φ40×12

Standard stock

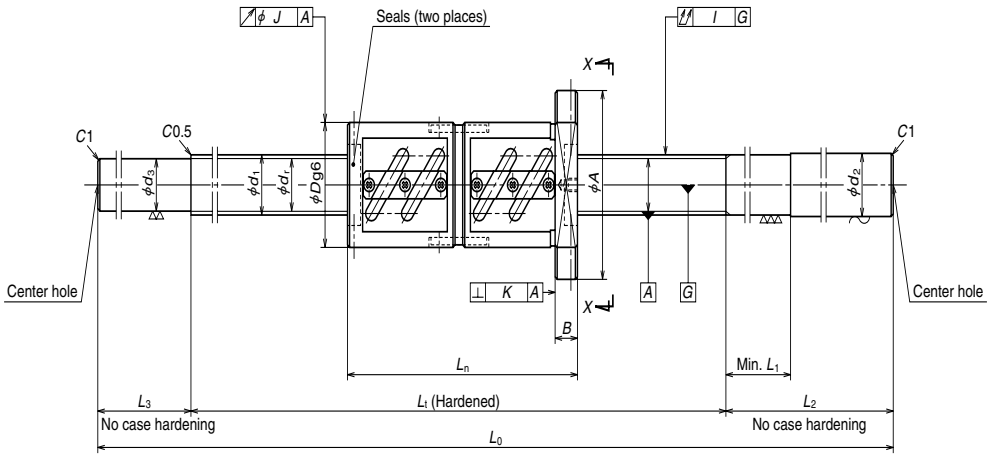

Nut type code: DFT

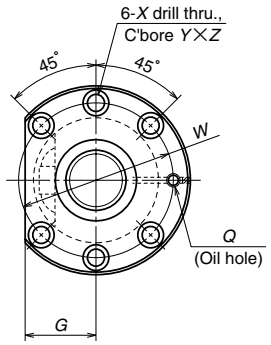

View X-X

Unit: mm

Ball screw No.	Stroke Max. L_t-L_n	Screw shaft dia. d_1	Lead l	Ball dia. D_w	Ball circle dia. d_m	Root dia. d_r	Effective ball turns: Turns × Circuits	Basic load rating (N): Dynamic C_a	Basic load rating (N): Static C_{0a}	Preload (N)	Dynamic friction torque, median (N · cm)	Nut: Outside dia. D	Nut: Flange A	Nut: Flange G	Nut: Flange B	Nut: Overall length L_n
W4007SS-3D-C5Z10	507	40	10	6.350	41	34.4	2.5×2	52000	137000	3630	108	82	124	47	18	193
W4010SS-3D-C5Z10	807															
W4014SS-2D-C5Z10	1207															
W4018SS-3D-C5Z10	1607															
W4024SS-2D-C5Z10	2207															
W4010SS-5D-C5Z12	775	40	12	7.144	41.5	34.1	2.5×2	61000	155000	4310	138	86	128	48	18	225
W4016SS-3D-C5Z12	1375															
W4025SS-2D-C5Z12	2275															

dimensions: Bolt hole W	Bolt hole X	Bolt hole Y	Bolt hole Z	Oil hole Q	Screw shaft dimensions: Threaded length L_t	Shaft end, right d_2	Shaft end, right L_1	Shaft end, right L_2	Shaft end, left d_3	Shaft end, left L_3	Overall length L_0	Lead accuracy: Travel compensation T	Lead accuracy: Deviation e_p	Lead accuracy: Variation υ_u	Run out: Shaft straightness I	Run out: Nut O.D. eccentricity J	Run out: Flange perpendicularity K	Mass (Kg)	Permissible rotational speed N(min⁻¹)
102	11	17.5	11	Rc1/8	700	40.3	60	300	34.4	100	1100	–0.017	0.035	0.025	0.065	0.025	0.015	15.5	1750
					1000			300		100	1400	–0.024	0.040	0.027	0.080			18.1	
					1400			350		120	1870	–0.034	0.054	0.035	0.100			22.2	
					1800			350		120	2270	–0.043	0.065	0.040	0.130			25.6	
					2400			400		150	2950	–0.058	0.077	0.046	0.170			31.6	
106	11	17.5	11	Rc1/8	1000	40.3	70	300	34.1	100	1400	–0.024	0.040	0.027	0.080	0.025	0.015	19.7	1750
					1600			350		150	2100	–0.038	0.054	0.035	0.130			25.8	
					2500			400		150	3050	–0.060	0.077	0.046	0.170			34.0	

Remarks: 1. NSK support unit is recommended.
2. Only rust preventive agent is applied at time of delivery. Please apply lubricant (oil or grease) before use.
3. Permissible rotational speed is determined by a d · n value and a critical speed. See page B509.

www.bergab.ru Берг АБ bergab@ya.ru Тел. (495)-228-06-21, факс (495) 223-3071

www.bergab.ru Берг АБ bergab@ya.ru Тел. (495)-228-06-21, факс (495) 223-3071

φ40×10、φ50×10

Standard stock

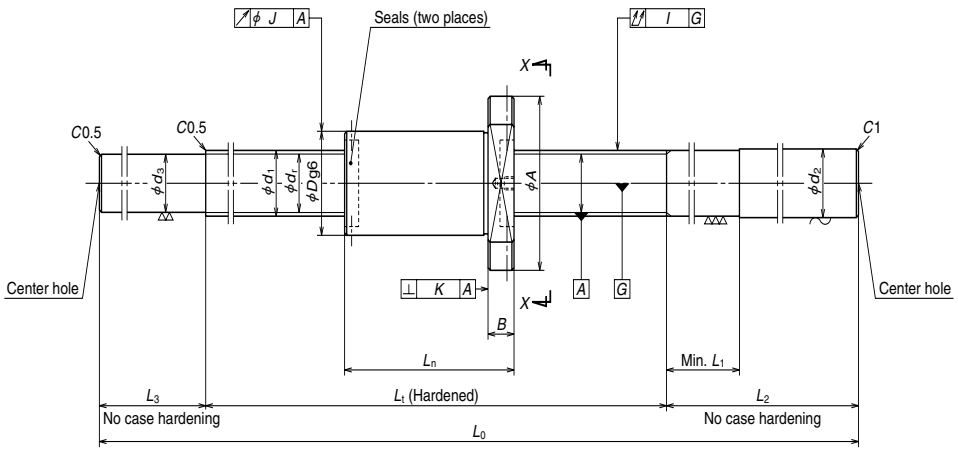

Nut type code: ZFD

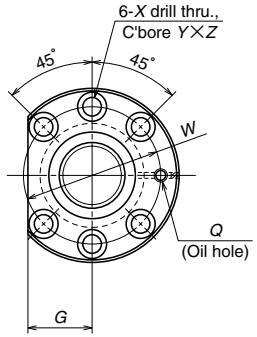

View X-X

Unit: mm

Ball screw No.	Stroke Max. L_t-L_n	Screw shaft dia. d_1	Lead l	Ball dia. D_w	Ball circle dia. d_m	Root dia. d_r	Effective ball turns	Basic load rating (N) Dynamic C_a	Basic load rating (N) Static C_{0a}	Preload (N)	Dynamic friction torque, median (N · cm)	Nut Outside dia. D	Nut Flange A	Nut Flange G	Nut Flange B	Nut Overall length L_n
W4007SS-4ZY-C5Z10	557	40	10	6.350	41.75	35.1	4	38400	93300	2840	83	62	104	40	18	143
W4010SS-6ZY-C5Z10	857															
W4014SS-3ZY-C5Z10	1257															
W4018SS-4ZY-C5Z10	1657															
W4024SS-3ZY-C5Z10	2257															
W5007SS-1ZY-C5Z10	557	50	10	6.350	51.75	45.1	4	43600	122000	3240	108	72	114	44	18	143
W5010SS-3ZY-C5Z10	857															
W5015SS-3ZY-C5Z10	1357															
W5020SS-3ZY-C5Z10	1857															
W5026SS-3ZY-C5Z10	2457															

Ball screw No.	dimensions Bolt hole W	X	Y	Z	Oil hole Q	Screw shaft dimensions Threaded length L_t	Shaft end, right d_2	L_1	L_2	Shaft end, left d_3	L_3	Overall length L_0	Lead accuracy Travel compensation T	Deviation e_p	Variation v_u	Run out Shaft straightness I	Nut O.D. eccentricity J	Flange perpendicularity K	Mass (Kg)	Permissible rotational speed N(min⁻¹)
W4007SS-4ZY-C5Z10	82	11	17.5	11	Rc1/8	700	40.3	60	300	35.1	100	1100	–0.015	0.035	0.025	0.065	0.019	0.013	12.1	1750
W4010SS-6ZY-C5Z10						1000			300		100	1400	–0.022	0.040	0.027	0.080			14.7	
W4014SS-3ZY-C5Z10						1400			350		120	1870	–0.032	0.054	0.035	0.100			18.9	
W4018SS-4ZY-C5Z10						1800			350		120	2270	–0.041	0.065	0.040	0.130			22.5	
W4024SS-3ZY-C5Z10						2400			400		150	2950	–0.056	0.077	0.046	0.170			28.5	
W5007SS-1ZY-C5Z10	92	11	17.5	11	Rc1/8	700	50.3	60	300	45.1	100	1100	–0.015	0.035	0.025	0.065	0.019	0.013	18.3	1400
W5010SS-3ZY-C5Z10						1000			300		100	1400	–0.022	0.040	0.027	0.080			22.5	
W5015SS-3ZY-C5Z10						1500			400		150	2050	–0.034	0.054	0.035	0.130			31.8	
W5020SS-3ZY-C5Z10						2000			400		150	2550	–0.046	0.065	0.040	0.170			38.9	
W5026SS-3ZY-C5Z10						2600			500		200	3300	–0.060	0.093	0.054	0.220			49.5	

Remarks: 1. NSK support unit is recommended.
2. Only rust preventive agent is applied at time of delivery. Please apply lubricant (oil or grease) before use.
3. Permissible rotational speed is determined by a d · n value and a critical speed. See page B509.

www.bergab.ru Берг АБ bergab@ya.ru Тел. (495)-228-06-21, факс (495) 223-3071

www.bergab.ru Берг АБ bergab@ya.ru Тел. (495)-228-06-21, факс (495) 223-3071

φ45×10、φ50×10

Standard stock

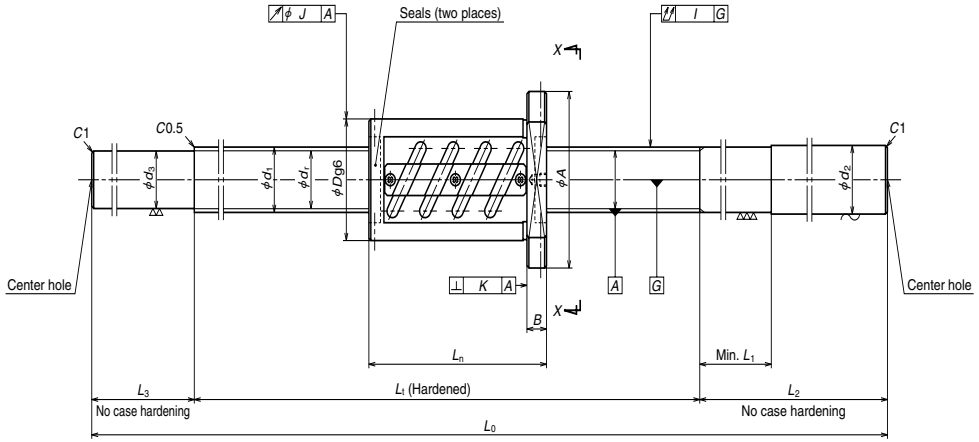

Nut type code: ZFT

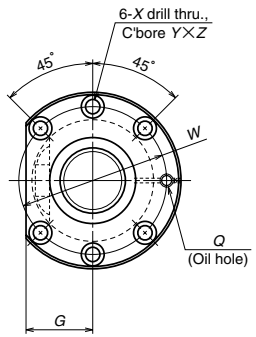

View X-X

Unit: mm

Ball screw No.	Stroke Max. L_t-L_n	Screw shaft dia. d_1	Lead l	Ball dia. D_w	Ball circle dia. d_m	Root dia. d_r	Effective ball turns: Turns × Circuits	Basic load rating (N): Dynamic C_a	Basic load rating (N): Static C_{0a}	Preload (N)	Dynamic friction torque, median (N・cm)	Nut: Outside dia. D	Nut: Flange A	Nut: Flange G	Nut: Flange B	Nut: Overall length L_n
W4510SS-1Z-C5Z10	897	45	10	6.350	46	39.4	2.5×1	29900	77300	2260	69	88	132	50	18	103
W4516SS-1Z-C5Z10	1497															
W4525SS-1Z-C5Z10	2397															
W5010SS-1Z-C5Z10	897	50	10	6.350	51	44.4	2.5×1	31800	87400	2450	78	93	135	51	18	103
W5015SS-1Z-C5Z10	1397															
W5020SS-1Z-C5Z10	1897															
W5026SS-1Z-C5Z10	2497															
W5010SS-2Z-C5Z10	837	50	10	6.350	51	44.4	2.5×2	57700	175000	4020	138	93	135	51	18	163
W5015SS-2Z-C5Z10	1337															
W5020SS-2Z-C5Z10	1837															
W5026SS-2Z-C5Z10	2437															

dimensions: Bolt hole W	Bolt hole X	Bolt hole Y	Bolt hole Z	Oil hole Q	Screw shaft dimensions: Threaded length L_t	Shaft end, right d_2	Shaft end, right L_1	Shaft end, right L_2	Shaft end, left d_3	Shaft end, left L_3	Overall length L_0	Lead accuracy: Travel compensation T	Lead accuracy: Deviation e_p	Lead accuracy: Variation v_u	Run out: Shaft straightness I	Run out: Nut O.D. eccentricity J	Run out: Flange perpendicularity K	Mass (Kg)	Permissible rotational speed N(min⁻¹)
110	11	17.5	11	Rc1/8	1000	45.3	60	300	39.4	100	1400	-0.024	0.040	0.027	0.080	0.025	0.015	19.7	1550
					1600			400		150	2150	-0.038	0.054	0.035	0.130			28.1	
					2500			450		150	3100	-0.060	0.077	0.046	0.170			38.8	
113	11	17.5	11	Rc1/8	1000	50.3	60	300	44.4	100	1400	-0.024	0.040	0.027	0.080	0.025	0.015	23.8	1400
					1500			400		150	2050	-0.036	0.054	0.035	0.130			32.9	
					2000			400		150	2550	-0.048	0.065	0.040	0.170			39.8	
					2600			450		150	3200	-0.062	0.093	0.054	0.220			48.9	
113	11	17.5	11	Rc1/8	1000	50.3	60	300	44.4	100	1400	-0.024	0.040	0.027	0.080	0.025	0.015	25.5	1400
					1500			400		150	2050	-0.036	0.054	0.035	0.130			34.6	
					2000			400		150	2550	-0.048	0.065	0.040	0.170			41.5	
					2600			450		150	3200	-0.062	0.093	0.054	0.220			50.7	

Remarks: 1. NSK support unit is recommended.
2. Only rust preventive agent is applied at time of delivery. Please apply lubricant (oil or grease) before use.
3. Permissible rotational speed is determined by a d・n value and a critical speed. See page B509.

www.bergab.ru Берг АБ bergab@ya.ru Тел. (495)-228-06-21, факс (495) 223-3071

www.bergab.ru Берг АБ bergab@ya.ru Тел. (495)-228-06-21, факс (495) 223-3071

B-Ⅰ-6.4 V Series

(1) VFA ball screws: Standard, low-priced FA ball screws

◇**Features**

●**Accuracy: Ct7 grade**

Ct7 grade series demonstrates high ball screw performance for transporting mechanism of Cartesian type robots and single axis actuators.

●**High speed traveling**

The high helix, 10 mm and 20 mm leads make high speed feed possible.

●**Functional shaft end configuration**

Screw shaft outside surface is used for the support bearing seat. Thus, the exclusive support unit installed on the simple support side allows flexible stroke. (Current support units can be used on the fixed support side.)

Refer to Page B273 for details of support units.

●**Low price**

Prices are 40% lower than other existing A series.

◇**Dimension tables**

Dimension tables show shapes/sizes as well as specification factors of shaft diameter/lead combinations. Tables also contain data as shown below:

●**Lead accuracy**

Lead accuracy is Ct7 Grade.

T : Travel compensation

e_p : Tolerance on specified travel

υ_{300} : Travel variation

Refer to "Technical Description: Lead accuracy" (Page B499) for details of codes.

●**Permissible rotational speed**

d・n : Limited by the relative peripheral speed between the screw shaft and the nut.

Critical speed : Limited by the natural frequency of a ball screw shaft. Critical speed depends on the supporting condition of screw shaft.

Use under either, but the smaller permissible rotational speed. For details, see "Technical description: Permissible rotational speed" (Page B509).

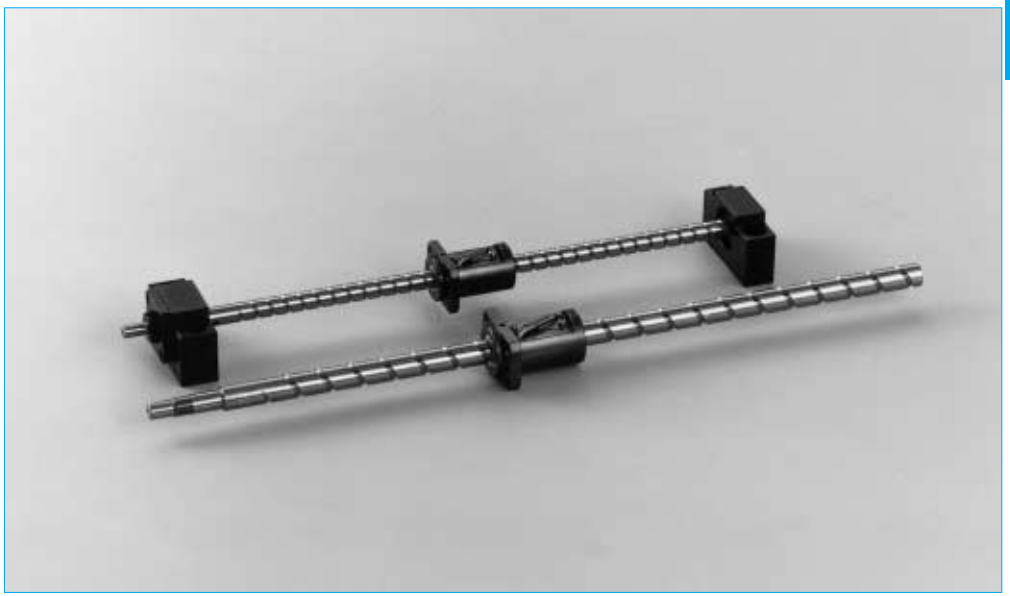

www.bergab.ru Берг АБ bergab@ya.ru Тел. (495)-228-06-21, факс (495) 223-3071

www.bergab.ru Берг АБ bergab@ya.ru Тел. (495)-228-06-21, факс (495) 223-3071

VFA φ12×10

Standard stock

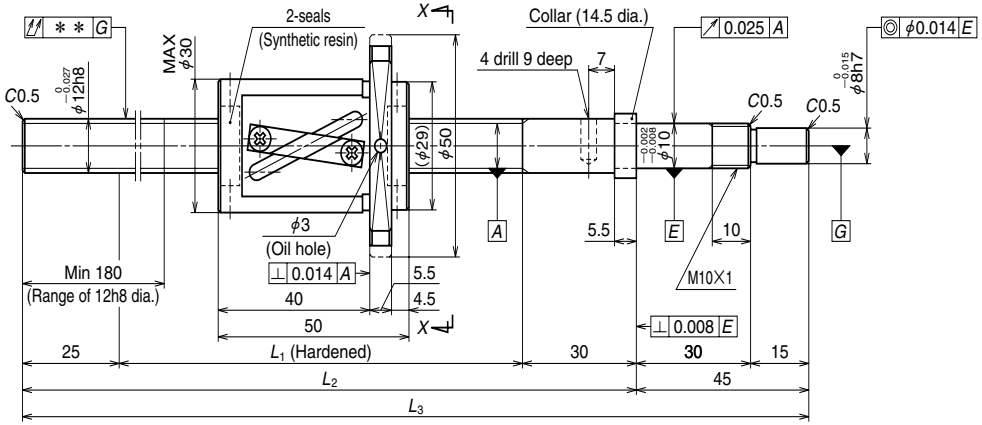

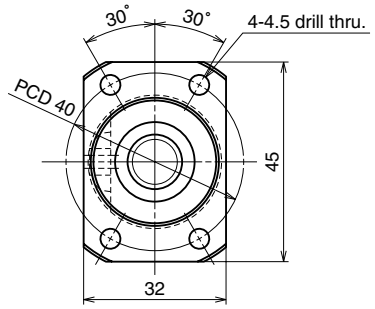

View X-X

Unit: mm

Ball screw specification		
Shaft dia. × Lead / Direction of turn		12×10/Right
Ball recirculation		Return tube
Ball dia. / Ball circle dia.		2.381/12.5
Root dia.		10.0
Effective turns of balls		2.5×1
Accuracy grade / Axial play code		Ct7/S
Basic load rating (N)	Dynamic C_a	3750
	Static C_{0a}	6480
Axial play		0.010 or less
Dynamic friction torque (N·cm)		~1.5
Spacer ball		None
Factory pre-packed grease		NSK grease LR3
Internal spatial volume of nut (cm³)		1.4

Unit: mm

Ball screw No.	Stroke		Screw shaft length			Lead accuracy			Shaft run-out**	Mass (Kg)	Permissible rotational speed N (min⁻¹) Supporting condition	
	Nominal	Maximum (L_1 − Nut length)	L_1	L_2	L_3	T	e_p	v_{300}			Fixed - Simple support	Fixed - Free
VFA1210C7S-410	250	260	310	365	410	0	0.085	0.052	0.100	0.56	3000	3000
VFA1210C7S-610	450	460	510	565	610	0	0.155	0.052	0.160	0.73	3000	1300

Remarks
1. We recommend NSK support units WBK10-01A (square type, fixed support side), WBK12SF-01(simple support side), and WBK10-11 (round type, fixed support side). WBK12SF-01 (on the simple support side) is a unit that supports the shaft outside surface by the bearing.
2. NSK grease LR3 is recommended.
3. Permissible rotational speed is determined by a d · n value and a critical speed. See page B509. Root diameter of screw shaft (dr) is 10.0 mm.

www.bergab.ru Берг АБ bergab@ya.ru Тел. (495)-228-06-21, факс (495) 223-3071

www.bergab.ru Берг АБ bergab@ya.ru Тел. (495)-228-06-21, факс (495) 223-3071

VFA φ15×10

Standard stock

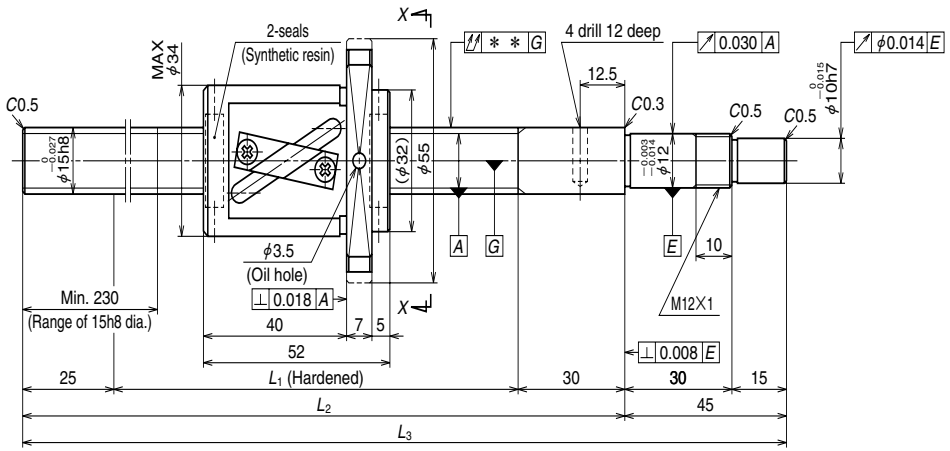

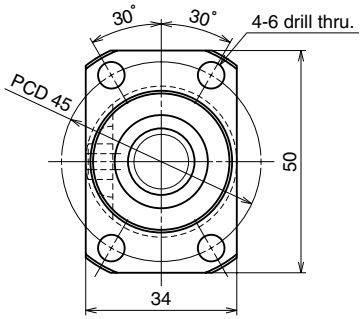

View X-X

Unit: mm

Ball screw specification		
Shaft dia. × Lead / Direction of turn		15×10/Right
Ball recirculation		Return tube
Ball dia. / Ball circle dia.		3.175/15.5
Root dia.		12.2
Effective turns of balls		2.5×1
Accuracy grade / Axial play code		Ct7/S
Basic load rating (N)	Dynamic C_a	7070
	Static C_{0a}	12800
Axial play		0.010 or less
Dynamic friction torque (N·cm)		~2.5
Spacer ball		None
Factory pre-packed grease		NSK grease LR3
Internal spatial volume of nut (cm³)		2.3

B 236

Unit: mm

Ball screw No.	Stroke		Screw shaft length			Lead accuracy			Shaft run-out**	Mass (Kg)	Permissible rotational speed N (min⁻¹) Supporting condition	
	Nominal	Maximum (L_1−Nut length)	L_1	L_2	L_3	T	e_p	v_{300}			Fixed - Simple support	Fixed - Free
VFA1510C7S-500	300	348	400	455	500	0	0.120	0.052	0.075	0.89	3000	2600
VFA1510C7S-700	500	548	600	655	700	0	0.195	0.052	0.110	1.1	3000	1150
VFA1510C7S-1000	800	848	900	955	1000	0	0.310	0.052	0.180	1.5	2340	510

Remarks
1. We recommend NSK support units WBK12-01A (square type, fixed support side), WBK15SF-01(simple support side), and WBK12-11 (round type, fixed support side). WBK12SF-01 (on the simple support side) is a unit that supports the shaft outside surface by the bearing.
2. NSK grease LR3 is recommended.
3. Permissible rotational speed is determined by a d・n value and a critical speed. See page B509. Root diameter of screw shaft (dr) is 12.2 mm.

www.bergab.ru Берг АБ bergab@ya.ru Тел. (495)-228-06-21, факс (495) 223-3071

www.bergab.ru Берг АБ bergab@ya.ru Тел. (495)-228-06-21, факс (495) 223-3071

VFA φ15×20

Standard stock

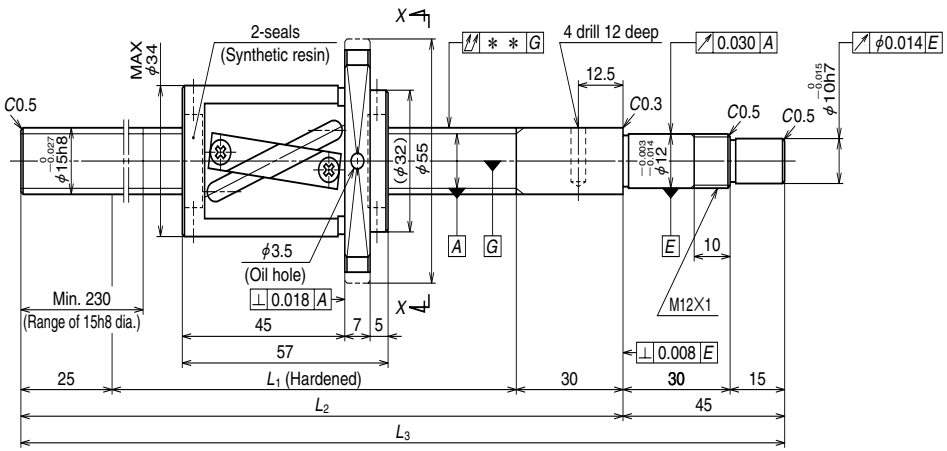

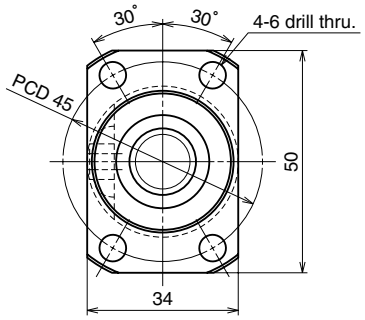

View X-X

Unit: mm

Ball screw specification		
Shaft dia. × Lead / Direction of turn		15×20/Right
Ball recirculation		Return tube
Ball dia. / Ball circle dia.		3.175/15.5
Root dia.		12.2
Effective turns of balls		1.5×1
Accuracy grade / Axial play code		Ct7/S
Basic load rating (N)	Dynamic C_a	4560
	Static C_{0a}	7730
Axial play		0.010 or less
Dynamic friction torque (N·cm)		~2.5
Spacer ball		None
Factory pre-packed grease		NSK grease LR3
Internal spatial volume of nut (cm³)		2.3

B 238

Unit: mm

Ball screw No.	Stroke		Screw shaft length			Lead accuracy			Shaft run-out**	Mass (Kg)	Permissible rotational speed N (min⁻¹) Supporting condition	
	Nominal	Maximum (L_1−Nut length)	L_1	L_2	L_3	T	e_p	v_{300}			Fixed - Simple support	Fixed - Free
VFA1520C7S-500	300	343	400	455	500	0	0.120	0.052	0.075	0.94	3000	2630
VFA1520C7S-700	500	543	600	655	700	0	0.195	0.052	0.110	1.2	3000	1160
VFA1520C7S-1000	800	843	900	955	1000	0	0.310	0.052	0.180	1.6	2350	510

Remarks
1. We recommend NSK support units WBK12-01A (square type, fixed support side), WBK15SF-01(simple support side), and WBK12-11 (round type, fixed support side). WBK12SF-01 (on the simple support side) is a unit that supports the shaft outside surface by the bearing.
2. NSK grease LR3 is recommended.
3. Permissible rotational speed is determined by a d・n value and a critical speed. See page B509. Root diameter of screw shaft (dr) is 12.2 mm.

www.bergab.ru Берг АБ bergab@ya.ru Тел. (495)-228-06-21, факс (495) 223-3071

www.bergab.ru Берг АБ bergab@ya.ru Тел. (495)-228-06-21, факс (495) 223-3071

(2) RMA, RMS precision rolled miniature ball screws

◇Features

●Low prices

The screw shaft is processed by precision rolling, and has come up to the accuracy grade of Ct7.

●Compact

Uses deflector ball recirculation for the compact ball nut.

●Easy to handle

RMA series has a finished shaft end. They can be used without further processing. It can be combined with the exclusive support kit (Page B287) and support units (Page B273).

Shaft ends of the RMS Series are unprocessed blank. It is necessary to design and machine prior to use.

◇Dimension tables

Dimension tables show shapes/sizes as well as specification factors of shaft diameter/lead combinations. Tables also contain the following data:

●Lead precision

Lead precision is Ct7 Grade.

T : Travel compensation;

e_p : Tolerance in specified travel;

v_{300} : Travel variation

Refer to "Technical Description: Lead accuracy" (Page B499) for details of codes.

www.bergab.ru Берг АБ bergab@ya.ru Тел. (495)-228-06-21, факс (495) 223-3071

www.bergab.ru Берг АБ bergab@ya.ru Тел. (495)-228-06-21, факс (495) 223-3071

RMA ϕ6×1

Standard stock

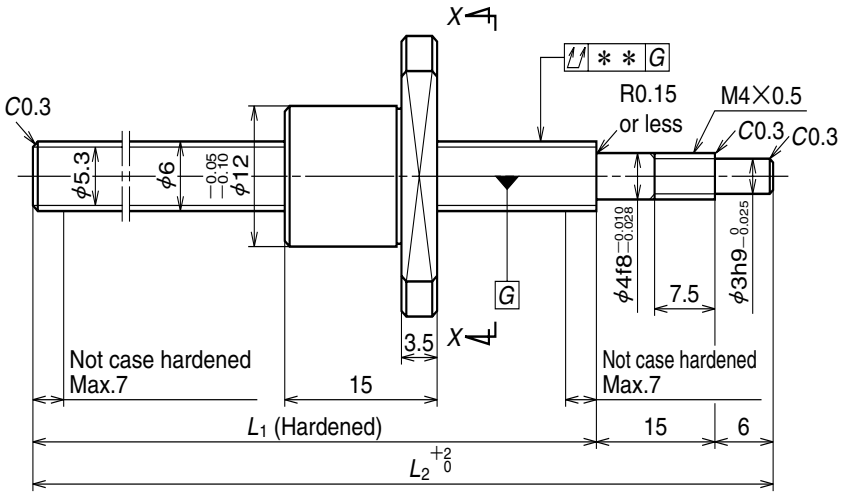

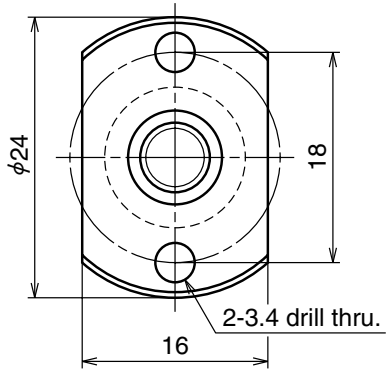

View *X-X*

Unit: mm

Ball screw specification		
Shaft dia.×Lead / Direction of turn		6×1/Right
Ball recirculation		Deflector
Ball dia. / Ball circle dia.		0.800/6.2
Root dia.		5.3
Effective turns of balls		1×3
Accuracy grade / Axial play code		Ct7/S
Basic load rating (N)	Dynamic C_a	520
	Static C_{0a}	925
Axial play		0.020 or less
Dynamic friction torque (N·cm)		~1.0
Spacer ball		None
Factory pre-packed grease		**Refer to the remarks 2.**

B 242

Unit: mm

Ball screw No.	Stroke		Screw shaft length		Lead accuracy			Shaft run-out**	Mass (Kg)	Permissible rotational speed N (min^{-1})
	Nominal	Maximum (L_1−Nut length)	L_1	L_2	Target compensation T	Deviation e_p	Variation v_{300}			
RMA0601C7S-160	100	124	139	160	0	0.052	0.052	0.060	0.045	3000
RMA0601C7S-260	200	224	239	260	0	0.085	0.052	0.090	0.065	3000

Remarks 1. We recommend NSK support bearing kit WBK04R-11 (round type, fixed support side).
2. Only rust preventive oil is applied at time of delivery. Please apply lubricant (oil or grease) before use.
3. Permissible rotational speed is determined by a d · n value and a critical speed. See page B509.
Root diameter of screw shaft (dr) is 5.2 mm.

www.bergab.ru Берг АБ bergab@ya.ru Тел. (495)-228-06-21, факс (495) 223-3071

www.bergab.ru Берг АБ bergab@ya.ru Тел. (495)-228-06-21, факс (495) 223-3071

RMA φ8×1

Standard stock

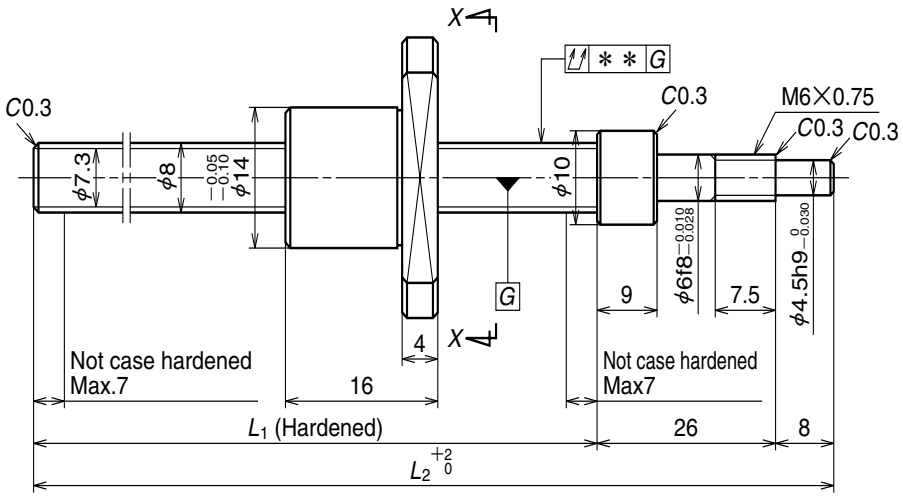

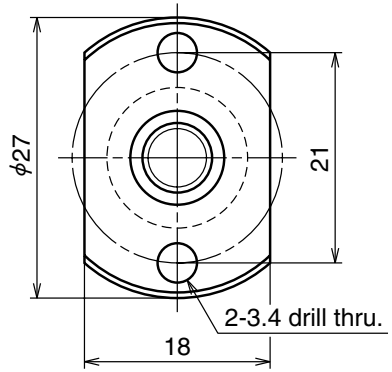

View X-X

Unit: mm

Ball screw specification		
Shaft dia. × Lead / Direction of turn		8×1/Right
Ball recirculation		Deflector
Ball dia. / Ball circle dia.		0.800/8.2
Root dia.		7.3
Effective turns of balls		1×3
Accuracy grade / Axial play code		Ct7/S
Basic load rating (N)	Dynamic C_a	600
	Static C_{0a}	1290
Axial play		0.020 or less
Dynamic friction torque (N·cm)		~1.0
Spacer ball		None
Factory pre-packed grease		**Refer to the remarks 2.**

B 244

Unit: mm

Ball screw No.	Stroke		Screw shaft length		Lead accuracy			Shaft run-out**	Mass (Kg)	Permissible rotational speed N (min^{-1})
	Nominal	Maximum (L_1−Nut length)	L_1	L_2	Target compensation T	Deviation e_p	Variation v_{300}			
RMA0801C7S-180	100	130	146	180	0	0.052	0.052	0.060	0.085	3000
RMA0801C7S-280	200	230	246	280	0	0.085	0.052	0.090	0.12	3000

Remarks 1. We recommend NSK round support kit WBK06R-11 (fixed support side).
2. Only rust preventive oil is applied at time of delivery. Please apply lubricant (oil or grease) before use.
3. Permissible rotational speed is determined by a d · n value and a critical speed. See page B509.
Root diameter of screw shaft (dr) is 7.2 mm.

www.bergab.ru Берг АБ bergab@ya.ru Тел. (495)-228-06-21, факс (495) 223-3071

www.bergab.ru Берг АБ bergab@ya.ru Тел. (495)-228-06-21, факс (495) 223-3071

RMA ϕ8×1.5

Standard stock

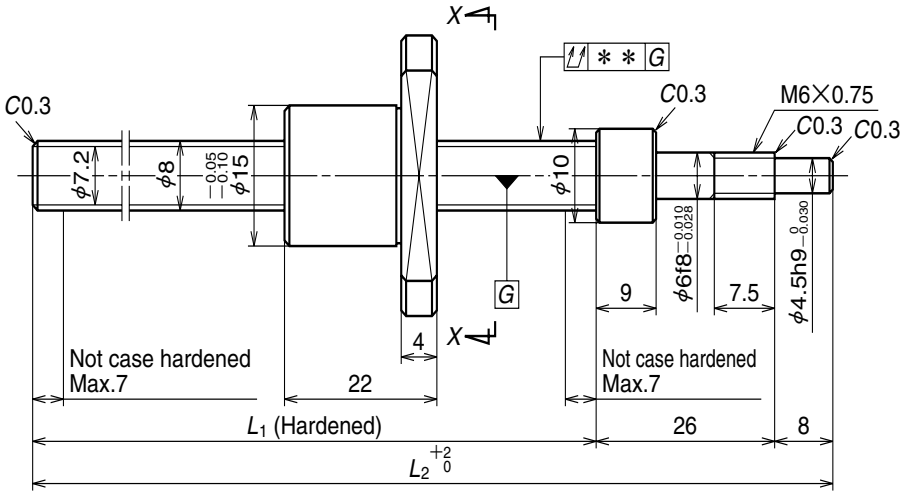

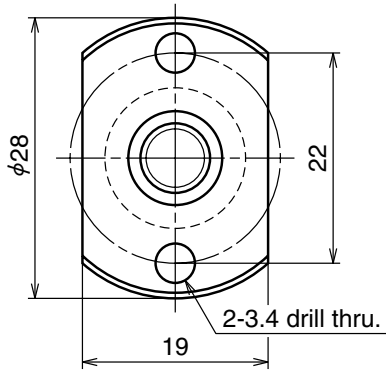

View X-X

Unit: mm

Ball screw specification		
Shaft dia.×Lead / Direction of turn		8×1.5/Right
Ball recirculation		Deflector
Ball dia. / Ball circle dia.		1.000/8.3
Root dia.		7.2
Effective turns of balls		1×3
Accuracy grade / Axial play code		Ct7/S
Basic load rating (N)	Dynamic C_a	810
	Static C_{0a}	1590
Axial play		0.020 or less
Dynamic friction torque (N·cm)		~1.0
Spacer ball		None
Factory pre-packed grease		**Refer to the remarks 2.**

B 246

Unit: mm

Ball screw No.	Stroke		Screw shaft length	
	Nominal	Maximum (L_1−Nut length)	L_1	L_2
RMA0801.5C7S-180	100	124	146	180
RMA0801.5C7S-280	200	224	246	280

Unit: mm

Lead accuracy			Shaft run-out**	Mass (Kg)	Permissible rotational speed N (min^{-1})
Target compensation T	Deviation e_p	Variation υ_{300}			
0	0.052	0.052	0.060	0.093	3000
0	0.085	0.052	0.090	0.13	3000

Remarks 1. We recommend NSK round support kit WBK06R-11 (fixed support side).
2. Only rust preventive oil is applied at time of delivery. Please apply lubricant (oil or grease) before use.
3. Permissible rotational speed is determined by a d · n value and a critical speed. See page B509.
Root diameter of screw shaft (dr) is 7.0 mm.

www.bergab.ru Берг АБ bergab@ya.ru Тел. (495)-228-06-21, факс (495) 223-3071

www.bergab.ru Берг АБ bergab@ya.ru Тел. (495)-228-06-21, факс (495) 223-3071

Standard stock

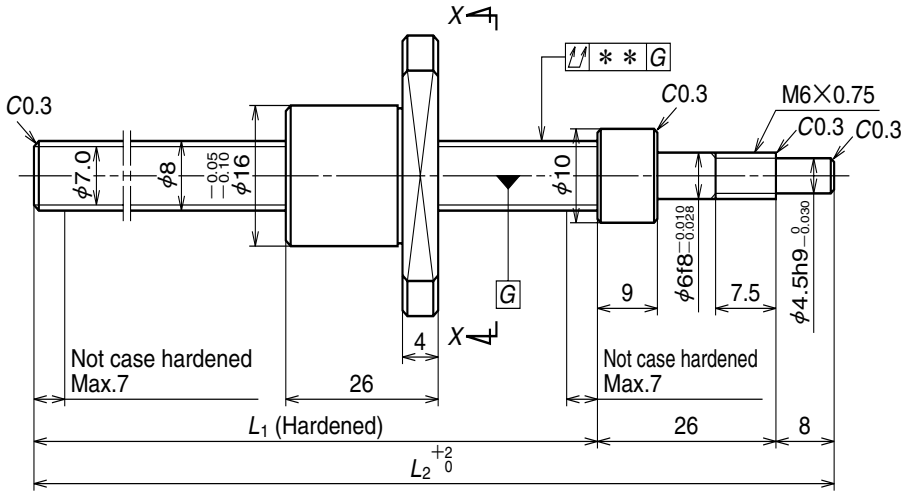

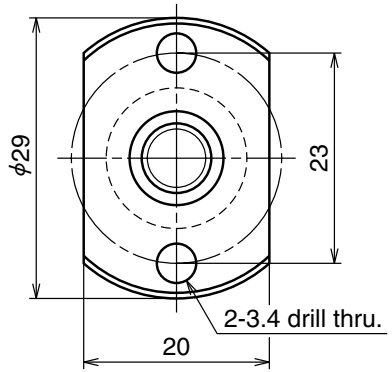

View X-X

Unit: mm

Ball screw specification		
Shaft dia. × Lead / Direction of turn		8×2/Right
Ball recirculation		Deflector
Ball dia. / Ball circle dia.		1.200/8.3
Root dia.		7.0
Effective turns of balls		1×3
Accuracy grade / Axial play code		Ct7/S
Basic load rating (N)	Dynamic C_a	1070
	Static C_{0a}	1950
Axial play		0.020 or less
Dynamic friction torque (N·cm)		~1.0
Spacer ball		None
Factory pre-packed grease		**Refer to the remarks 2.**

Unit: mm

Ball screw No.	Stroke		Screw shaft length	
	Nominal	Maximum (L_1−Nut length)	L_1	L_2
RMA0802C7S-180	100	120	146	180
RMA0802C7S-280	200	220	246	280

Unit: mm

Lead accuracy			Shaft run-out**	Mass (Kg)	Permissible rotational speed N (min^{-1})
Target compensation T	Deviation e_p	Variation υ_{300}			
0	0.052	0.052	0.060	0.10	3000
0	0.085	0.052	0.090	0.14	3000

Remarks 1. We recommend NSK round support kit WBK06R-11 (fixed support side).
2. Only rust preventive oil is applied at time of delivery. Please apply lubricant (oil or grease) before use.
3. Permissible rotational speed is determined by a d · n value and a critical speed. See page B509.
Root diameter of screw shaft (dr) is 6.9 mm.

www.bergab.ru Берг АБ bergab@ya.ru Тел. (495)-228-06-21, факс (495) 223-3071

www.bergab.ru Берг АБ bergab@ya.ru Тел. (495)-228-06-21, факс (495) 223-3071

Standard stock

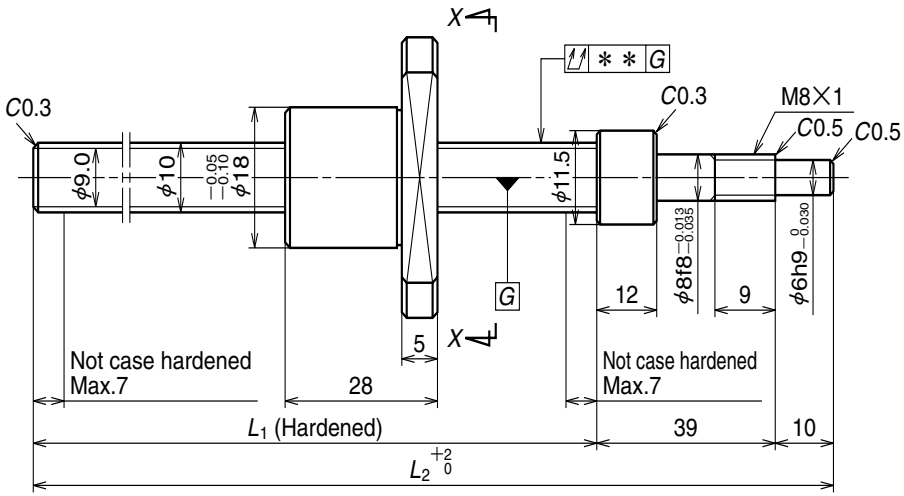

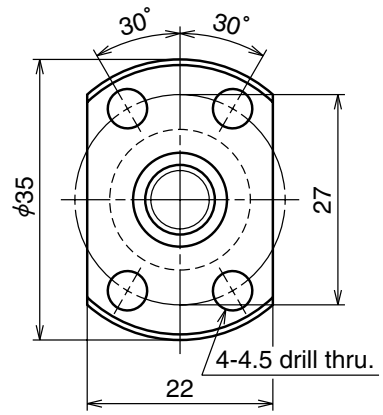

View X-X

Unit: mm

Ball screw specification		
Shaft dia.×Lead / Direction of turn		10×2/Right
Ball recirculation		Deflector
Ball dia. / Ball circle dia.		1.200/10.3
Root dia.		9.0
Effective turns of balls		1×3
Accuracy grade / Axial play code		Ct7/S
Basic load rating (N)	Dynamic C_a	1210
	Static C_{0a}	2510
Axial play		0.020 or less
Dynamic friction torque (N·cm)		~1.0
Spacer ball		None
Factory pre-packed grease		**Refer to the remarks 2.**

B 250

Ball screw No.	Stroke		Screw shaft length	
	Nominal	Maximum (L_1−Nut length)	L_1	L_2
RMA1002C7S-250	150	173	201	250
RMA1002C7S-350	250	273	301	350

Unit: mm

Lead accuracy			Shaft run-out**	Mass (Kg)	Permissible rotational speed N (min^{-1})
Target compensation T	Deviation e_p	Variation υ_{300}			
0	0.085	0.052	0.070	0.19	3000
0	0.085	0.052	0.100	0.25	3000

Remarks 1. We recommend NSK support kit WBK08-01A (square type, fixed support side) and WBK08-11 (round type, fixed support side).
2. Only rust preventive oil is applied at time of delivery. Please apply lubricant (oil or grease) before use.
3. Permissible rotational speed is determined by a d · n value and a critical speed. See page B509.
Root diameter of screw shaft (dr) is 8.9 mm.

www.bergab.ru Берг АБ bergab@ya.ru Тел. (495)-228-06-21, факс (495) 223-3071

www.bergab.ru Берг АБ bergab@ya.ru Тел. (495)-228-06-21, факс (495) 223-3071

RMA φ12×2

Standard stock

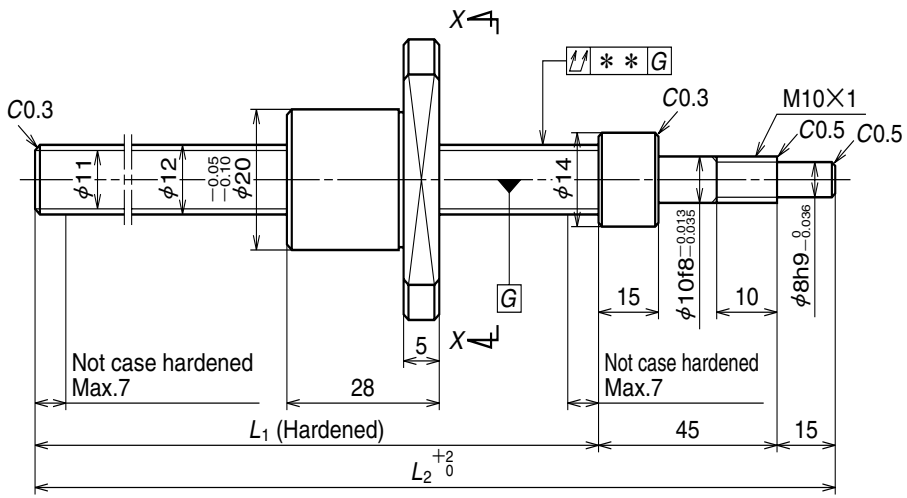

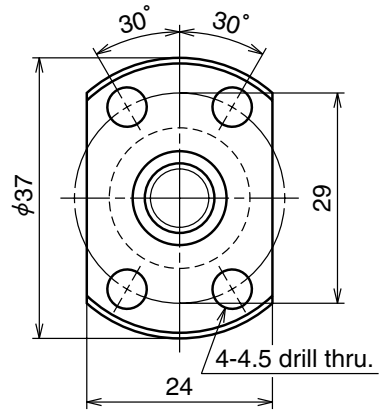

View X-X

Unit: mm

Ball screw specification		
Shaft dia.×Lead / Direction of turn		12×2/Right
Ball recirculation		Deflector
Ball dia. / Ball circle dia.		1.200/12.3
Root dia.		11.0
Effective turns of balls		1×3
Accuracy grade / Axial play code		Ct7/S
Basic load rating (N)	Dynamic C_a	1350
	Static C_{0a}	3190
Axial play		0.020 or less
Dynamic friction torque (N·cm)		~1.0
Spacer ball		None
Factory pre-packed grease		**Refer to the remarks 2.**

B 252

Ball screw No.	Stroke		Screw shaft length	
	Nominal	Maximum (L_1−Nut length)	L_1	L_2
RMA1202C7S-250	150	162	190	250
RMA1202C7S-350	250	262	290	350

Unit: mm

Lead accuracy			Shaft run-out**	Mass (Kg)	Permissible rotational speed N (min^{-1})
Target compensation T	Deviation e_p	Variation υ_{300}			
0	0.060	0.052	0.070	0.26	3000
0	0.085	0.052	0.100	0.34	3000

Remarks 1. We recommend NSK support unit WBK10-01A (square type, fixed support side) and WBK10-11 (round type, fixed support side).
2. Only rust preventive oil is applied at time of delivery. Please apply lubricant (oil or grease) before use.
3. Permissible rotational speed is determined by a d · n value and a critical speed. See page B509.
Root diameter of screw shaft (dr) is 10.9 mm.

www.bergab.ru Берг АБ bergab@ya.ru Тел. (495)-228-06-21, факс (495) 223-3071

www.bergab.ru Берг АБ bergab@ya.ru Тел. (495)-228-06-21, факс (495) 223-3071

φ6×1, φ8×1, φ8×1.5
φ8×2, φ10×2, φ12×2

Standard stock

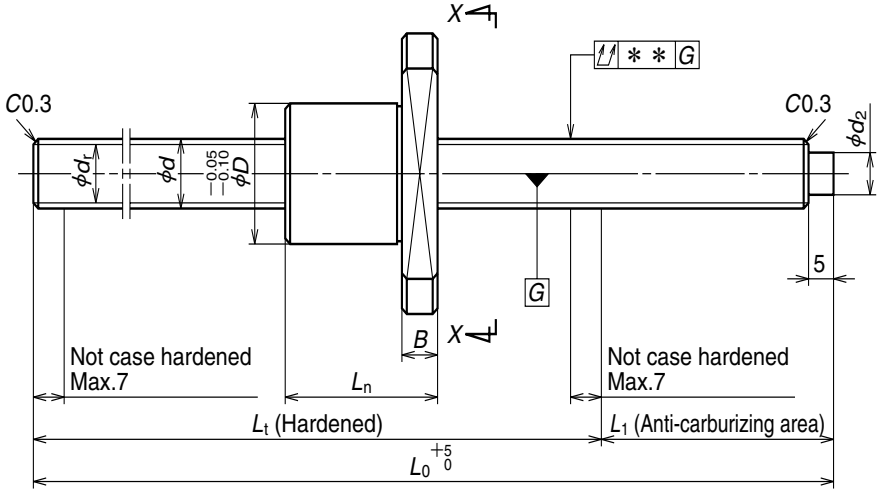

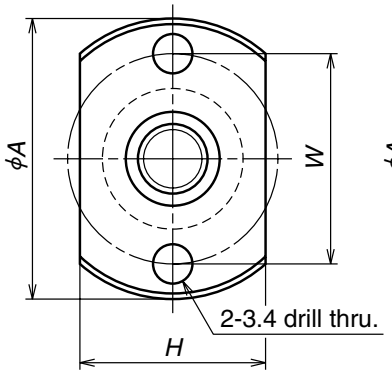

View *X-X*
(For screw shaft of 6 and 8 dia.)

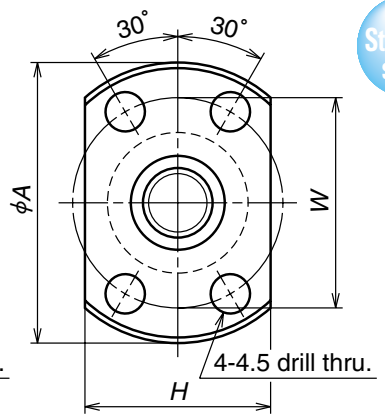

View *X-X*
(For screw shaft of 10 and 12 dia.)

Unit: mm

Ball screw No.	Stroke Max. L_t-L_n	Shaft dia. d	Lead l	Ball dia. D_w	Ball circle dia. d_m	Root dia. d_r	Effective turns of balls	Basic load rating (N) Dynamic C_a	Basic load rating (N) Static C_{0a}	Axial play Max.
RMS0601C7S-300	235	6	1	0.800	6.2	5.3	3	520	925	0.02
RMS0801C7S-300	234	8	1	0.800	8.2	7.3	3	600	1290	0.02
RMS0801.5C7S-300	228		1.5	1.000	8.3	7.2		810	1590	
RMS0802C7S-300	224		2	1.200	8.3	7.0		1070	1950	
RMS1002C7S-350	262	10	2	1.200	10.3	9.0	3	1210	2510	0.02
RMS1202C7S-350	262	12	2	1.200	12.3	11.0	3	1350	3190	0.02

Nut dimensions D	A	H	B	L_n	W	Screw shaft dimensions: Effective thread length L_t	Shaft end L_1	Shaft end d_2	Overall length L_0	Lead accuracy: Target compensation T	Deviation e_p	Variation υ_{300}	Shaft run-out**	Mass (Kg)	Permissible rotational speed N (min⁻¹)
12	24	16	3.5	15	18	250	50	4	300	0	0.085	0.052	0.09	0.075	3000
14	27	18	4	16	21	250	50	6	300	0	0.085	0.052	0.09	0.13	
15	28	19		22	22									0.14	
16	29	20		26	23									0.15	
18	35	22	5	28	27	290	60	8	350	0	0.085	0.052	0.10	0.25	
20	37	24	5	28	29	290	60	10	350	0	0.085	0.052	0.10	0.35	

Remarks 1. We recommend NSK support unit or support kit.
2. Only rust preventive agent is applied at time of delivery. Please apply lubricant (oil or grease) before use.
3. Seal is not installed.
4. Permissible rotational speed is determined by a d・n value and a critical speed. See page B509.

www.bergab.ru Берг АБ bergab@ya.ru Тел. (495)-228-06-21, факс (495) 223-3071

www.bergab.ru Берг АБ bergab@ya.ru Тел. (495)-228-06-21, факс (495) 223-3071

B-I-6.5 Rolled Ball Screw R Series

(1) Product classification

NSK rolled ball screws are classified by nut model as shown in Table I-6.4.

Table I-6•4 Classification of rolled ball screws

Nut model	Nut shape		Recirculation system	Lead classification	Page
RNFTL		Flanged, Tube projecting type	Return tube type	Fine, medium lead High helix lead	B257 B261
RNFBL		Flanged Circular	Return tube type	Fine, medium lead	B263
RNCT		V-thread (no flange) Projecting tube type	Return tube type	Fine lead	B265
RNSTL		Square type	Return tube type	Small, medium leads	B267
RNFCL		Flanged Circular	End cap type	High helix lead Ultra high helix lead	B269 B271

(2) Features

- ●Short delivery time: R Series is standardized, and available in stock.
- ●Interchangeable screw shaft and ball nut: Screw shaft and nut assembly components are sold separately, and randomly-matched. The maximum axial play after assembly is shown in the dimension tables (from Page B257 ~ B272).
- ●Low prices: Screw shaft is processed by rolling. This is why prices are lower than those of precision types.
- ●Abundant series: There are 128 types of nut assembly combinations in the series. Each combination has two to three different lengths in screw shaft.

(3) Accuracy

◇Lead accuracy: Ct10 grade (υ_{300}=0.210).
Refer to "Technical Description: Lead Accuracy" (Page B499) for details.

◇Axial play: Varies with internal specification. Refer to the dimension tables (Page B257).

◇Run out of screw shaft center: Ct10 grade

(4) Nut installation

Refer to "Technical Description: Installation" (Page B531).

(5) Shaft end machining

It is necessary to machine screw shaft end of the rolled ball screw.
Refer to "Configuration of rolled ball screw shaft end" (Page B29) if you use standard support unit. Refer to "Technical Description: Shaft end machining" (Page B537) for procedures and precautions.

(6) Rust prevention

Rust prevention agent is applied at time of delivery.

(7) Reference number

Reference number of rolled ball screw is described below.
Please use reference number to order, or for a price inquiry.

Nut assembly (example)

R N F T L 2 5 1 0 A 5 S

- Product code (rolled nut)
- Nut model FTL, FBL, STL, CT、FCL
- Screw shaft diameter (mm)
- Lead (mm)
- Internal design code
- Effective turns of balls (turns of balls x number of circuit)
- Seal code S: With seal / No code: Without seal

Screw shaft (example)

R S 2 5 1 0 A 2 0

- Product code (Rolled screw shaft)
- Screw shaft diameter (mm)
- Lead (mm)
- Internal design code
- Screw shaft length (x 100 mm)

(8) Combinations of shaft diameter/lead

Combinations are shown below in Table I-6.5. The table also indicates nut model codes and page numbers to be referred.

Table I-6.5 Combinations of shaft diameter/lead

Screw shaft diameter (mm)	Lead (mm) 3	4	5	6	8	10	12	16	20	25	32	40	50	64	80
10	○B257 △B265			○B257●B263											
12					○B257●B263		○B261◎B269								
14		○B257●B263 △B265□B267	○B257●B263 △B265□B267												
15									◎B269						
16						○B257		○B261 ◎B269			◎B271				
18					○B257●B263 △B265□B267										
20			○B257●B263 △B265□B267			○B257●B263 □B267			○B261 ◎B269			◎B271			
25			○B257●B263 △B265□B267			○B257●B263 △B265□B267				○B261 ◎B269			◎B271		
28				○B259●B263 △B265□B267											
32						○B259●B263 △B265□B267					○B261 ◎B269			◎B271	
36						○B259●B263 △B265□B267									
40						○B259△B265 ●B263						○B261 ◎B269			◎B271
45							○B259 △B265□B267								
50						○B259 △B265		○B259 △B265					◎B269		

○ : RNFTL ● : RNFBL △ : RNCT □ : RNSTL ◎ : RNFCL

www.bergab.ru Берг АБ bergab@ya.ru Тел. (495)-228-06-21, факс (495) 223-3071

www.bergab.ru Берг АБ bergab@ya.ru Тел. (495)-228-06-21, факс (495) 223-3071

Standard stock

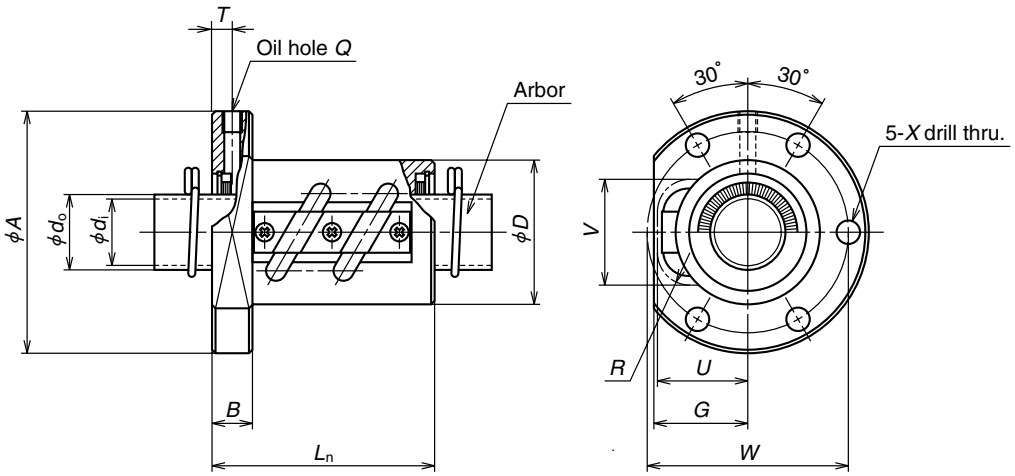

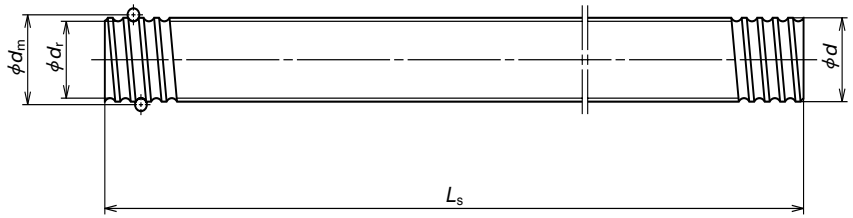

Unit: mm

Ball nut No.	Shaft dia. d	Lead l	Ball dia. D_w	Ball circle dia. d_m	Root dia. d_r	Effective turns of balls: Turns × Circuits	Basic load rating (N): Dynamic C_a	Basic load rating (N): Static C_{0a}	Axial play Max.	Ball nut dimensions: Outside dia. D
RNFTL 1003A3.5	10	3	2.381	10.65	8.1	3.5×1	3780	6730	0.10	20
RNFTL 1006A2.5S	10	6	2.381	10.65	8.1	2.5×1	2830	4810	0.10	20
RNFTL 1208A2.5S	12	8	2.778	12.65	9.6	2.5×1	3730	6560	0.10	25
RNFTL 1404A3.5S	14	4	2.778	14.5	11.5	3.5×1	5370	10800	0.10	25
RNFTL 1405A2.5S	14	5	3.175	14.5	11.0	2.5×1	5260	9720	0.10	30
RNFTL 1610A2.5 **RNFTL 1610A2.5S**	16	10	3.175	16.75	13.3	2.5×1	5660	11500	0.10	30
RNFTL 1808A3.5 **RNFTL 1808A3.5S**	18	8	4.762	18.5	13.6	3.5×1	13200	25800	0.15	34
RNFTL 2005A2.5 **RNFTL 2005A2.5S**	20	5	3.175	20.5	17.0	2.5×1	6360	14200	0.10	40
RNFTL 2010A2.5 **RNFTL 2010A2.5S**	20	10	4.762	21.25	16.2	2.5×1	10900	21800	0.15	40
RNFTL 2505A5 **RNFTL 2505A5S**	25	5	3.175	25.5	22.0	2.5×2	12800	36300	0.10	42
RNFTL 2510A2.5 **RNFTL 2510A2.5S**	25	10	6.35	26	19.0	2.5×1	17500	35200	0.20	44
RNFTL 2510A5 **RNFTL 2510A5S**						2.5×2	31800	70300		

Remarks
1. Protruding portion of the tube does not have any interference with the ball nut housing if its dimensions corresponding to U and V are large enough.
2. The actual entire screw shaft length may become slightly longer than nominal length Ls due to manufacturing tolerance.
3. Seal are provided in the nut. Therefore, the external dimensions of those with the seals are the same as those without.
In the side view drawing of ball nut, the above of the center line is with seal, and beneath is without seal.
Seal for those with the shaft diameter of 14 mm or less is made of synthetic resin. Seal for those of 16 mm or over is a "Brush-seal."

Ball nut dimensions: Flange A	Flange G	Flange B	Length L_n	Bolt hole W	Bolt hole X	Oil hole Q	Oil hole T	Projecting tube U	Projecting tube V	Projecting tube R	Nut Mass. (kg)	Arbor: Outside dia. d_0	Arbor: Bore d_i	Screw shaft: Standard length L_s			Screw shaft: Screw shaft No.	Shaft mass/m (kg)
40	15	6	34	30	4.5	M3×0.5	3.0	15	15	7	0.092	8.1	6.1	400	800		RS1003A**	0.50
40	15	6	36	30	4.5	M3×0.5	3.5	15	15	5	0.095	8.1	6.1	400	800		RS1006A**	0.56
45	19	8	46	35	4.5	M3×0.5	5.5	19	18	7	0.18	9.6	7.6	400	800		RS1208A**	0.74
50	19	10	43	40	4.5	M6×1	5.0	19	20	7	0.20	11.5	9.5	500	1000		RS1404A**	1.02
50	22	10	45	40	4.5	M6×1	5.0	22	21	8	0.26	11.0	9.0	500	1000		RS1405A**	1.00
53	23	10	54	41	5.5	M6×1	5.5	23	22.5	8	0.28	13.3	11.3	500	1000	1500	RS1610A**	1.37
63	27	12	58	49	6.6	M6×1	6.0	27	27	8	0.43	13.6	11.6	500	1000	1500	RS1808A**	1.60
60	28	10	46	50	4.5	M6×1	5.0	28	27	10	0.42	17.0	14.6	500	1000	2000	RS2005A**	2.17
67	30	12	59	53	6.6	M6×1	6.0	30	29	12	0.55	16.2	13.8	500	1000	2000	RS2010A**	2.18
71	28	12	66	57	6.6	M6×1	6.0	28	31	10	0.62	22.0	19.6	1000	2000	2500	RS2505A**	3.47
80	34	15	62	62	9	M6×1	7.5	34	37	17	0.75	19.0	16.6	1000	2000	2500	RS2510A**	3.13
80	34	15	92	62	9	M6×1	7.5	34	37	17								

Remarks
4. Nut assembly with arbor and the screw shaft are separated at time of delivery.
5. At the end of the screw shaft reference number where marked with "**", fill with the value obtained by dividing the standard screw shaft length by 100 mm.
6. Items in stock are not applied surface treatment.

www.bergab.ru Берг АБ bergab@ya.ru Тел. (495)-228-06-21, факс (495) 223-3071

www.bergab.ru Берг АБ bergab@ya.ru Тел. (495)-228-06-21, факс (495) 223-3071

Standard stock

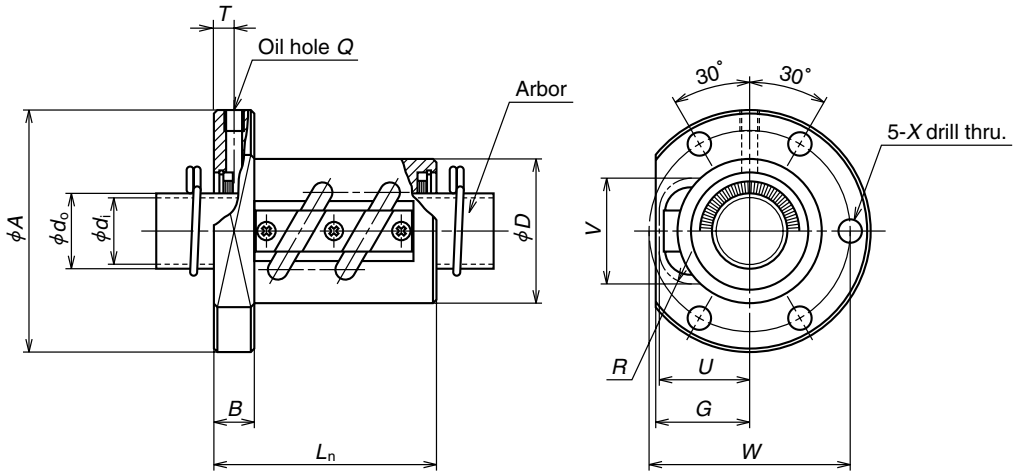

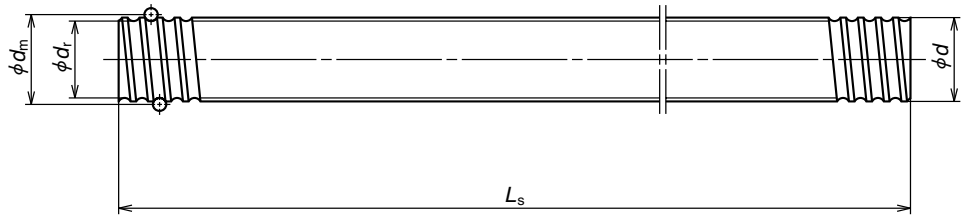

B 260

Ball nut No.	Shaft dia. d	Lead l	Ball dia. D_w	Ball circle dia. d_m	Root dia. d_r	Effective turns of balls: Turns × Circuits	Basic load rating (N): Dynamic C_a	Basic load rating (N): Static C_{0a}	Axial play Max.	Ball nut dimensions: Outside dia. D
RNFTL 2806A2.5	28	6	3.175	28.5	25.0	2.5×1	7430	20300	0.10	50
RNFTL 2806A2.5S										
RNFTL 2806A5						2.5×2	13500	40600		50
RNFTL 2806A5S										
RNFTL 3210A5	32	10	6.35	33.75	27.0	2.5×2	35700	92200	0.20	55
RNFTL 3210A5S										
RNFTL 3610A2.5	36	10	6.35	37	30.0	2.5×1	21000	51000	0.20	60
RNFTL 3610A2.5S										
RNFTL 3610A5						2.5×2	38100	102000		60
RNFTL 3610A5S										
RNFTL 4010A7	40	10	6.35	41.75	35.0	3.5×2	53500	164000	0.20	65
RNFTL 4010A7S										
RNFTL 4512A5	45	12	7.144	46.5	39.0	2.5×2	49600	147000	0.23	70
RNFTL 4512A5S										
RNFTL 5010A7	50	10	6.35	51.75	45.0	3.5×2	59500	205000	0.20	80
RNFTL 5010A7S										
RNFTL 5016A5	50	16	9.525	52	42.0	2.5×2	99900	293000	0.23	85
RNFTL 5016A5S										

Ball nut dimensions: Flange A	Flange G	Flange B	Length L_n	Bolt hole W	Bolt hole X	Oil hole Q	Oil hole T	Projecting tube U	Projecting tube V	Projecting tube R	Nut Mass. (kg)	Arbor: Outside dia. d_o	Arbor: Bore d_i	Screw shaft: Standard length L_s			Screw shaft: Screw shaft No.	Shaft mass/m (kg)
79	33	15	55	65	6.6	M6×1	7.5	33	34	10	0.85	25.0	22.6	1000	2000	2500	RS2806A**	4.47
79	33	15	79	65	6.6	M6×1	7.5	33	34	10	1.07							
97	39	18	97	75	11	M6×1	9.0	39	42	17	1.55	27.0	24.6	1000	2000	3000	RS3210A**	5.53
102	42	18	68	80	11	M6×1	9.0	42	46	17	1.47	30.0	27.6	1000	2000	3000	RS3610A**	6.91
102	42	18	98	80	11	M6×1	9.0	42	46	17	1.80							
114	44	20	120	90	14	M6×1	10.0	44	50	20	2.49	35.0	31.8	2000	3000	4000	RS4010A**	8.87
130	47	22	116	100	18	M6×1	11.0	47	55	20	3.07	39.0	35.8	2000	3000	4000	RS4512A**	11.16
140	52	22	122	110	18	M6×1	11.0	52	59	20	4.06	45.0	41.8	2000	3000	4000	RS5010A**	14.15
163	57	28	146	125	22	M6×1	14.0	57	63	25	6.42	42.0	38.8	2000	3000	4000	RS5016A**	13.48

Remarks
1. The protruding portion of the tube does not interfere with nut housing if its corresponding dimensions to U and V are large enough.
2. The actual screw shaft length may become slightly longer than nominal length of Ls due to manufacturing tolerance.
3. Seal are provided in the nut. Therefore, the external dimensions of those with the seals are the same as those without.
In the side view drawing of the nut, the above of the center line is with seal, and beneath is without seal.
Seal is "Brush-seal".
4. Nut assembly with arbor and the screw shaft are separated at time of delivery.
5. At the end of the screw shaft reference number where marked with "**", fill with the value obtained by dividing the standard screw shaft length by 100 mm.
6. Items in stock are not applied surface treatment.

www.bergab.ru Берг АБ bergab@ya.ru Тел. (495)-228-06-21, факс (495) 223-3071

www.bergab.ru Берг АБ bergab@ya.ru Тел. (495)-228-06-21, факс (495) 223-3071

Standard stock

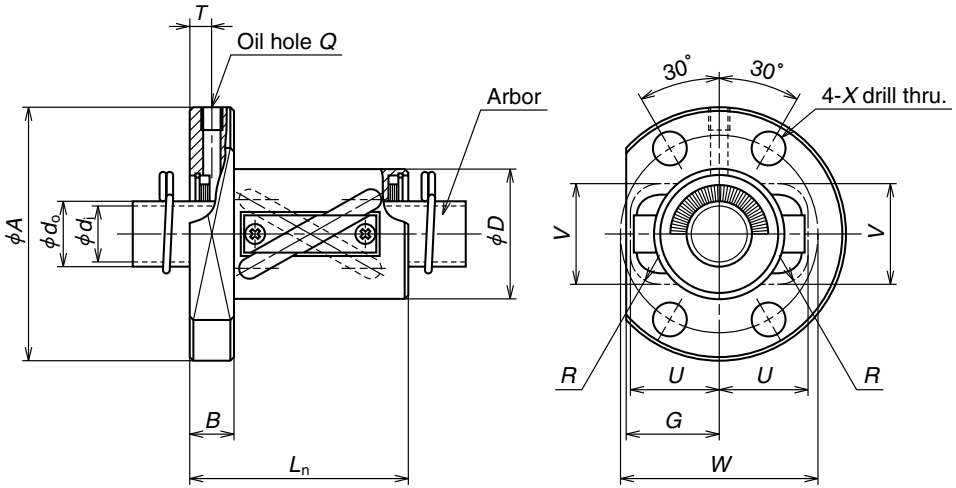

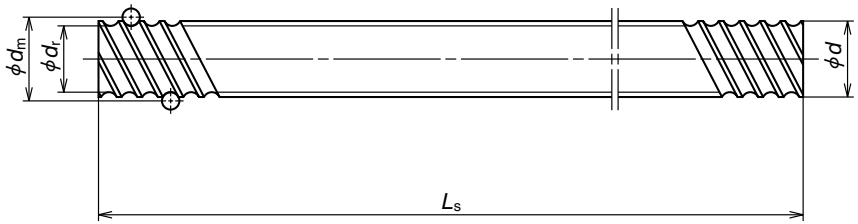

B 262

Unit: mm

Ball nut No.	Shaft dia. d	Lead l	Ball dia. D_w	Ball circle dia. d_m	Root dia. d_r	Effective turns of balls: Turns × Circuits	Basic load rating (N): Dynamic C_a	Basic load rating (N): Static C_{0a}	Axial play Max.	Ball nut dimensions: Outside dia. D
RNFTL 1212A3	12	12	2.381	12.65	10.1	1.5 × 2	3360	6270	0.10	24
RNFTL 1616A3 **RNFTL 1616A3S**	16	16	2.778	16.65	13.6	1.5 × 2	4880	9650	0.10	30
RNFTL 2020A3 **RNFTL 2020A3S**	20	20	3.175	20.75	17.3	1.5 × 2	7010	15400	0.10	35
RNFTL 2525A3 **RNFTL 2525A3S**	25	25	3.969	26	22.0	1.5 × 2	10500	24100	0.12	45
RNFTL 3232A3 **RNFTL 3232A3S**	32	32	4.762	33.25	28.0	1.5 × 2	15300	37100	0.15	55
RNFTL 4040A3 **RNFTL 4040A3S**	40	40	6.35	41.75	35.0	1.5 × 2	24400	61600	0.20	70

Remarks 1. Protruding portion of the tube does not have any interference with the ball nut housing if its dimensions corresponding to U and V are large enough.
2. The actual entire screw shaft length may become slightly longer than nominal length Ls due to manufacturing tolerance.
3. Seal are provided in the nut. Therefore, the external dimensions of those with the seals are the same as those without.
In the side view drawing of ball nut, the above of the center line is with seal, and beneath is without seal.
Seal for those with the shaft diameter of 14 mm or less is made of synthetic resin. Seal for those of 16 mm or over is a "Brush-seal."

Ball nut dimensions: Flange A	Flange G	Flange B	Length L_n	Bolt hole W	Bolt hole X	Oil hole Q	Oil hole T	Projecting tube U	Projecting tube V	Projecting tube R	Nut Mass. (kg)	Arbor: Outside dia. d_0	Arbor: Bore d_i	Screw shaft: Standard length L_s	Screw shaft No.	Shaft mass/m (kg)
44	17	8	44	34	4.5	M3 × 0.5	4.0	17	16	5	0.16	10.1	8.1	400 800	RS1212A**	0.74
55	22	10	50	43	6.6	M6 × 1	5.0	22	22	7	0.29	13.6	11.6	500 1000 1500	RS1616A**	1.37
68	25	12	59	52	9	M6 × 1	6.0	25	27	8	0.49	17.3	14.9	500 1000 2000	RS2020A**	2.19
80	31	12	69	63	9	M6 × 1	6.0	31	32	10	0.80	22.0	19.6	1000 2000 2500	RS2525A**	3.43
100	37	15	84	80	11	M6 × 1	7.5	37	40	12	1.46	28.0	25.6	1000 2000 3000	RS3232A**	5.71
120	46	18	103	95	14	M6 × 1	9.0	46	49	15	2.69	35.0	31.8	2000 3000 4000	RS4040A**	8.82

Remarks 4. Nut assembly with arbor and the screw shaft are separated at time of delivery.
5. At the end of the screw shaft reference number where marked with "**", fill with the value obtained by dividing the standard screw shaft length by 100 mm.
6. Items in stock are not applied surface treatment.

www.bergab.ru Берг АБ bergab@ya.ru Тел. (495)-228-06-21, факс (495) 223-3071

www.bergab.ru Берг АБ bergab@ya.ru Тел. (495)-228-06-21, факс (495) 223-3071

Standard stock

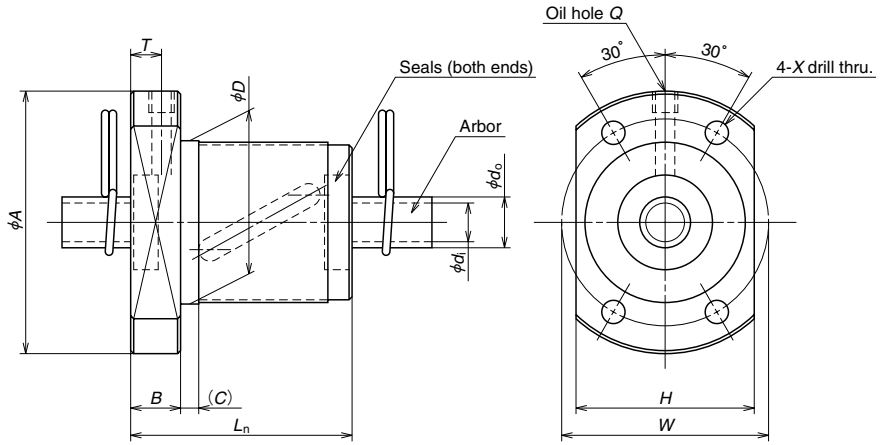

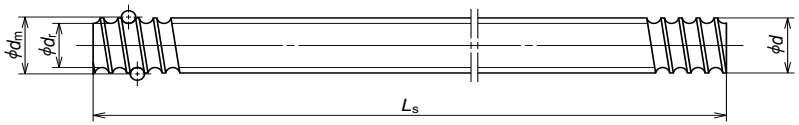

Unit: mm

Ball nut No.	Shaft dia. d	Lead l	Ball dia. D_w	Ball circle dia. d_m	Root dia. d_r	Effective turns of balls: Turns × Circuits	Basic load rating (N): Dynamic C_a	Basic load rating (N): Static C_{0a}	Axial play Max.	Ball nut dimensions: Outside dia. D
RNFBL 1006A2.5S	10	6	2.381	10.65	8.1	2.5×1	2830	4810	0.10	26
RNFBL 1208A2.5S	12	8	2.778	12.65	9.6	2.5×1	3730	6560	0.10	29
RNFBL 1404A3.5S	14	4	2.778	14.5	11.5	3.5×1	5370	10800	0.10	31
RNFBL 1405A2.5S	14	5	3.175	14.5	11.0	2.5×1	5260	9720	0.10	32
RNFBL 1808A3.5S	18	8	4.762	18.5	13.6	3.5×1	13200	25800	0.15	50
RNFBL 2005A2.5S	20	5	3.175	20.5	17.0	2.5×1	6360	14200	0.10	40
RNFBL 2010A2.5S	20	10	4.762	21.25	16.2	2.5×1	10900	21800	0.15	52
RNFBL 2505A2.5S	25	5	3.175	25.5	22.0	2.5×1	7070	18200	0.10	43
RNFBL 2505A5S						2.5×2	12800	36300		
RNFBL 2510A2.5S	25	10	6.35	26	19.0	2.5×1	17500	35200	0.20	60
RNFBL 2510A5S						2.5×2	31800	70300		
RNFBL 2806A2.5S	28	6	3.175	28.5	25.0	2.5×1	7430	20300	0.10	50
RNFBL 2806A5S						2.5×2	13500	40600		
RNFBL 3210A2.5S	32	10	6.35	33.75	27.0	2.5×1	19700	46100	0.20	67
RNFBL 3210A5S						2.5×2	35700	92200		
RNFBL 3610A2.5S	36	10	6.35	37	30.0	2.5×1	21000	51000	0.20	70
RNFBL 3610A5S						2.5×2	38100	102000		
RNFBL 4010A5S	40	10	6.35	41.75	35.0	2.5×2	40100	116000	0.20	76

Ball nut dimensions: Flange A	Flange H	Flange B	Length: Overall length L	Length (C)	Bolt hole W	Bolt hole X	Oil hole Q	Oil hole T	Nut Mass. (kg)	Arbor: Outside dia. d_0	Arbor: Bore d_i	Screw shaft: Standard length L_s			Screw shaft No.	Shaft mass/m (kg)
42	29	8	36	3	34	4.5	M3×0.5	5.0	0.16	8.1	6.1	400	800		RS1006A**	0.56
45	32	8	44	3	37	4.5	M3×0.5	5.5	0.21	9.6	7.6	400	800		RS1208A**	0.81
50	37	10	40	4	40	4.5	M6×1	5.0	0.25	11.5	9.5	500	1000		RS1404A**	1.02
50	38	10	40	4	40	4.5	M6×1	5.0	0.26	11.0	9.0	500	1000		RS1405A**	1.00
80	60	12	61	4	65	6.6	M6×1	6.0	1.00	13.6	11.6	500	1000	1500	RS1808A**	1.60
60	46	10	40	4	50	4.5	M6×1	5.0	0.37	17.0	14.6	500	1000	2000	RS2005A**	2.17
82	64	12	61	5	67	6.6	M6×1	6.0	1.05	16.2	13.8	500	1000	2000	RS2010A**	2.18
67	50	10	40	4	55	5.5	M6×1	5.0	0.40	22.0	19.6	1000	2000	2500	RS2505A**	3.47
			55						0.50							
96	72	15	66	5	78	9.0	M6×1	7.5	1.52	19.0	16.6	1000	2000	2500	RS2510A**	3.13
			96						1.99							
80	60	12	47	5	65	6.6	M6×1	6.0	0.70	25.0	22.6	1000	2000	2500	RS2806A**	4.47
			65						0.87							
103	78	15	67	5	85	9.0	M6×1	7.5	1.72	27.0	24.6	1000	2000	3000	RS3210A**	5.53
			97						2.25							
110	82	17	69	5	90	11.0	M6×1	8.5	1.97	30.0	27.6	1000	2000	3000	RS3610A**	6.91
			99						2.53							
116	88	17	99	5	96	11.0	M6×1	8.5	2.86	35.0	31.8	2000	3000	4000	RS4010A**	8.87

Remarks 1. The actual screw shaft length may be slightly longer than nominal length Ls due to manufacturing tolerance.
2. Nut assembly with arbor and screw shaft are separated at time of delivery.
3. The value obtained by dividing the standard screw length by 100 mm will be entered at the end of the reference number where marked with "* *."
4. Items in stock are not applied surface treatment.
5. Seal for those with the shaft diameter of 14 mm or less is made of synthetic resin. Seal for those with 16 mm or larger is "Brush-seal."

www.bergab.ru Берг АБ bergab@ya.ru Тел. (495)-228-06-21, факс (495) 223-3071

www.bergab.ru Берг АБ bergab@ya.ru Тел. (495)-228-06-21, факс (495) 223-3071

Standard stock

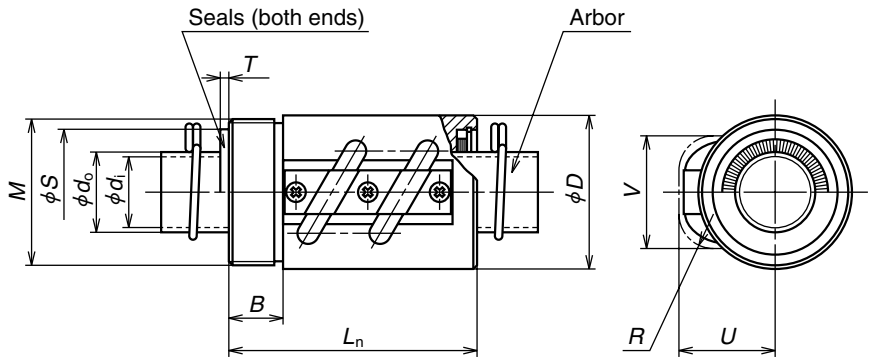

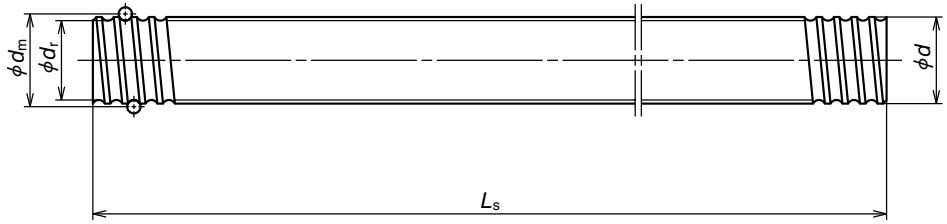

Unit: mm

Ball nut No	Shaft dia. d	Lead l	Ball dia. D_w	Ball circle dia. d_m	Root dia. d_r	Effective turns of balls: Turns × Circuits	Basic load rating (N): Dynamic C_a	Basic load rating (N): Static C_{0a}	Axial play Max.	Ball nut dimensions: Outside dia. D
RNCT 1003A3.5	10	3	2.381	10.65	8.1	3.5 × 1	3780	6730	0.10	20
RNCT 1404A3.5S	14	4	2.778	14.5	11.5	3.5 × 1	5370	10800	0.10	25
RNCT 1405A2.5S	14	5	3.175	14.5	11.0	2.5 × 1	5260	9720	0.10	30
RNCT 1808A3.5 **RNCT 1808A3.5S**	18	8	4.762	18.5	13.6	3.5 × 1	13200	25800	0.15	34
RNCT 2005A2.5 **RNCT 2005A2.5S**	20	5	3.175	20.5	17.0	2.5 × 1	6360	14200	0.10	40
RNCT 2505A5 **RNCT 2505A5S**	25	5	3.175	25.5	22.0	2.5 × 2	12800	36300	0.10	42
RNCT 2510A5 **RNCT 2510A5S**	25	10	6.35	26	19.0	2.5 × 2	31800	70300	0.20	44
RNCT 2806A5 **RNCT 2806A5S**	28	6	3.175	28.5	25.0	2.5 × 2	13500	40600	0.10	50
RNCT 3210A5 **RNCT 3210A5S**	32	10	6.35	33.75	27.0	2.5 × 2	35700	92200	0.20	55
RNCT 3610A5 **RNCT 3610A5S**	36	10	6.35	37	30.0	2.5 × 2	38100	102000	0.20	60
RNCT 4010A7 **RNCT 4010A7S**	40	10	6.35	41.75	35.0	3.5 × 2	53500	164000	0.20	65
RNCT 4512A5 **RNCT 4512A5S**	45	12	7.144	46.5	39.0	2.5 × 2	49600	147000	0.23	70
RNCT 5010A7 **RNCT 5010A7S**	50	10	6.35	51.75	45.0	3.5 × 2	59500	205000	0.20	80
RNCT 5016A5 **RNCT 5016A5S**	50	16	9.525	52	42.0	2.5 × 2	99900	293000	0.23	85

Ball nut dimensions: Flange M	Flange B	Length L_n	Projecting tube U	Projecting tube V	Projecting tube R	Nut Mass. (kg)	Seal dimensions: Diameter S	Seal dimensions: Thickness T	Arbor: Outside dia. d_o	Arbor: Bore d_i	Screw shaft: Standard length L_s	Screw shaft No.	Shaft mass/m (kg)
M18 × 1	10	38	15	15	7	0.049			8.1	6.1	400 800	RS1003A**	0.50
M24 × 1	10	43	19	20	7	0.083			11.5	9.5	500 1000	RS1404A**	1.02
M26 × 1.5	10	45	22	21	8	0.15			11.0	9.0	500 1000	RS1405A**	1.00
M32 × 1.5	12	58	27	27	8	0.21	28.5	2.5	13.6	11.6	500 1000 1500	RS1808A**	1.60
M36 × 1.5	12	48	28	27	10	0.28	29.5	2.5	17.0	14.6	500 1000 2000	RS2005A**	2.17
M40 × 1.5	15	69	28	31	10	0.38	34.5	2.5	22.0	19.6	1000 2000 2500	RS2505A**	3.47
M42 × 1.5	15	92	34	37	17	0.49	38.5	2.5	19.0	16.6	1000 2000 2500	RS2510A**	3.13
M45 × 1.5	15	79	33	34	10	0.68	37.5	2.5	25.0	22.6	1000 2000 2500	RS2806A**	4.47
M50 × 1.5	18	97	39	42	17	0.79	45.5	2.5	27.0	24.6	1000 2000 3000	RS3210A**	5.53
M55 × 2	18	98	42	46	17	0.97	50.5	3.0	30.0	27.6	1000 2000 3000	RS3610A**	6.91
M60 × 2	25	125	44	50	20	1.37	54.5	3.0	35.0	31.8	2000 3000 4000	RS4010A**	8.87
M65 × 2	30	124	47	55	20	1.42	60.5	3.0	39.0	35.8	2000 3000 4000	RS4512A**	11.16
M75 × 2	40	140	52	59	20	2.41	64.5	3.0	45.0	41.8	2000 3000 4000	RS5010A**	14.15
M80 × 2	40	158	57	63	25	3.14	68.5	3.0	42.0	38.8	2000 3000 4000	RS5016A**	13.48

Remarks
1. Protruding portion of the tube does not have any interference with the ball nut housing if its dimensions corresponding to U and V are large enough.
2. The actual entire screw shaft length may become slightly longer than nominal length Ls due to manufacturing tolerance.
3. A seal cannot be installed in the V thread side. It may be installed in the opposite side.
   Seal is provided in the nut. Therefore, the external dimensions of those with a seal are the same as those without.
   In the side view drawing of ball nut, the above of the center line is with seal, and beneath is without seal.
   Seal for those with the shaft diameter of 14 mm or less is made of synthetic resin. Seal for those of 16 mm or over is a "Brush-seal."
   There is no seal on the V-thread side for RNCT1404A3.5S and RNCT1405A2.5S.
4. Nut assembly with arbor and the screw shaft are separated at time of delivery.
5. At the end of the screw shaft reference number where marked with "**", fill with the value obtained by dividing the standard screw shaft length by 100 mm.
6. Items in stock are not applied surface treatment.

www.bergab.ru Берг АБ bergab@ya.ru Тел. (495)-228-06-21, факс (495) 223-3071

www.bergab.ru Берг АБ bergab@ya.ru Тел. (495)-228-06-21, факс (495) 223-3071

Standard stock

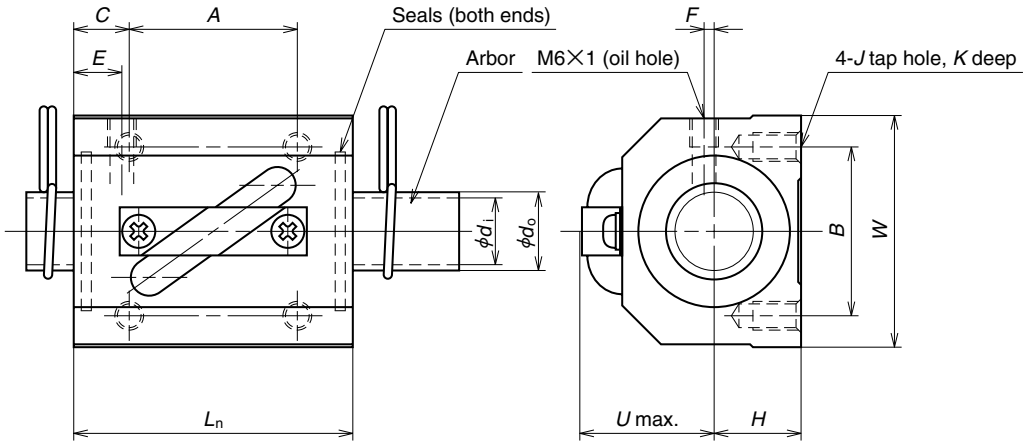

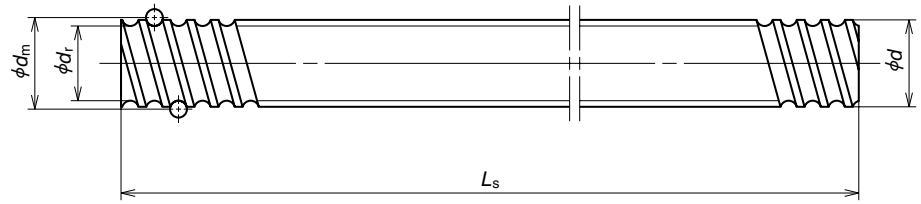

Unit: mm

Ball nut No.	Shaft dia. d	Lead l	Ball dia. D_w	Ball circle dia. d_m	Root dia. d_r	Effective turns of balls: Turns × Circuits	Basic load rating (N): Dynamic C_a	Basic load rating (N): Static C_{0a}	Axial play Max.	Ball nut dimensions: Length L_n
RNSTL 1404A3.5S	14	4	2.778	14.5	11.5	3.5×1	5370	10800	0.10	38
RNSTL 1405A2.5S	14	5	3.175	14.5	11.0	2.5×1	5260	9720	0.10	38
RNSTL 1808A3.5S	18	8	4.762	18.5	13.6	3.5×1	13200	25800	0.15	56
RNSTL 2005A2.5S	20	5	3.175	20.5	17.0	2.5×1	6360	14200	0.10	38
RNSTL 2010A2.5S	20	10	4.762	21.25	16.2	2.5×1	10900	21800	0.15	58
RNSTL 2505A2.5S	25	5	3.175	25.5	22.0	2.5×1	7070	18200	0.10	35
RNSTL 2510A5S	25	10	6.35	26	19.0	2.5×2	31800	70300	0.20	94
RNSTL 2806A2.5S	28	6	3.175	28.5	25.0	2.5×1	7430	20300	0.10	42
RNSTL 2806A5S						2.5×2	13500	40600		67
RNSTL 3210A2.5S	32	10	6.35	33.75	27.0	2.5×1	19700	46100	0.20	64
RNSTL 3210A5S						2.5×2	35700	92200		94
RNSTL 3610A2.5S	36	10	6.35	37	30.0	2.5×1	21000	51000	0.20	64
RNSTL 3610A5S						2.5×2	38100	102000		96
RNSTL 4512A5S	45	12	7.144	46.5	39.0	2.5×2	49600	147000	0.23	115

Ball nut dimensions: Width W	Center height H	Bolt hole A	Bolt hole B	Bolt hole C	Bolt hole J	Bolt hole K	Oil hole E	Oil hole F	U	Nut Mass. (kg)	Arbor: Outside dia. d_o	Arbor: Bore d_i	Screw shaft: Standard length L_s	Screw shaft No.	Shaft mass/m (kg)
34	13	22	26	8	M4	7	7	3	20	0.20	11.5	9.5	500 1000	RS1404A**	1.02
34	13	22	26	8	M4	7	7	3	21	0.20	11.0	9.0	500 1000	RS1405A**	1.00
48	17	35	35	10.5	M6	10	8	3	26	0.31	13.6	11.6	500 1000 1500	RS1808A**	1.60
48	17	22	35	8	M6	9	6	2	27	0.24	17.0	14.6	500 1000 2000	RS2005A**	2.17
48	18	35	35	11.5	M6	10	10	2	28	0.35	16.2	13.8	500 1000 2000	RS2010A**	2.18
60	20	22	40	6.5	M8	10	6	0	27	0.31	22.0	19.6	1000 2000 2500	RS2505A**	3.47
60	23	60	40	17	M8	12	10	0	32	1.32	19.0	16.6	1000 2000 2500	RS2510A**	3.13
60	22	18	40	12	M8	12	8	0	32	0.65	25.0	22.6	1000 2000 2500	RS2806A**	4.47
60	22	40	40	13.5						1.04					
70	26	45	50	9.5	M8	12	10	0	38	1.12	27.0	24.6	1000 2000 3000	RS3210A**	5.53
70	26	60	50	17						1.75					
86	29	45	60	9.5	M10	16	11	0	41	1.76	30.0	27.6	1000 2000 3000	RS3610A**	6.91
86	29	60	60	18						2.64					
100	36	75	75	20	M12	20	13	0	46	1.22	39.0	35.8	2000 3000 4000	RS4512A**	11.16

Remarks 1. The actual screw shaft length may be slightly longer than nominal length Ls due to manufacturing tolerance.
2. Nut assembly with arbor and screw shaft are separated at time of delivery.
3. The value obtained by dividing the standard screw length by 100 mm will be entered at the end of the reference number where marked with "* *."
4. Items in stock are not applied surface treatment.
5. Seal for those with the shaft diameter of 14 mm or less is made of synthetic resin. Seal for those with 18 mm or larger is "Brush-seal."

www.bergab.ru Берг АБ bergab@ya.ru Тел. (495)-228-06-21, факс (495) 223-3071

www.bergab.ru Берг АБ bergab@ya.ru Тел. (495)-228-06-21, факс (495) 223-3071

Standard stock

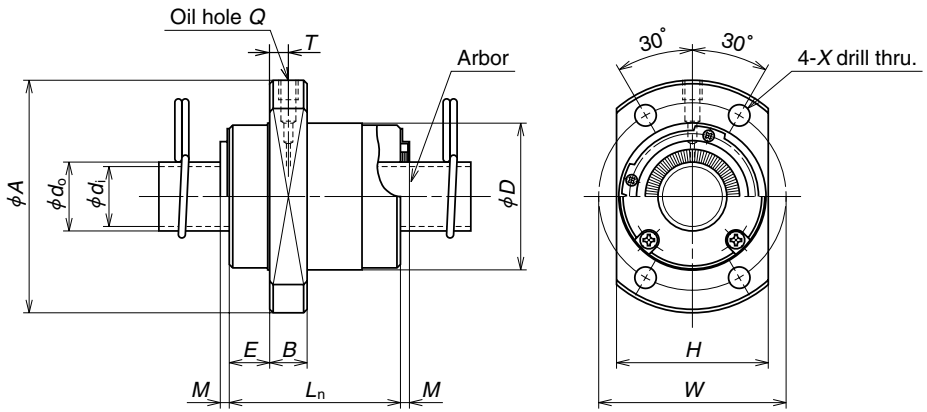

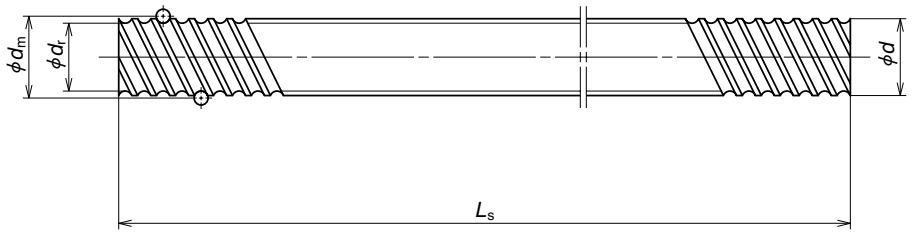

Unit: mm

Ball nut No.	Shaft dia. d	Lead l	Ball dia. D_w	Ball circle dia. d_m	Root dia. d_r	Effective turns of balls: Turns × Circuits	Basic load rating (N): Dynamic C_a	Basic load rating (N): Static C_{0a}	Axial play Max.	Ball nut dimensions: Outside dia. D
RNFCL 1212A3	12	12	2.381	12.65	10.1	1.7 × 2	3740	6640	0.10	26
RNFCL 1212A6						1.7 × 4	6780	13300		
RNFCL 1520A3 **RNFCL 1520A3S**	15	20	3.175	15.5	12.2	1.7 × 2	6730	12300	0.10	33
RNFCL 1616A3 **RNFCL 1616A3S**	16	16	2.778	16.65	13.5	1.7 × 2	5430	10400	0.10	32
RNFCL 1616A6 **RNFCL 1616A6S**						1.7 × 4	9860	20800		
RNFCL 2020A3 **RNFCL 2020A3S**	20	20	3.175	20.75	17.3	1.7 × 2	7810	16500	0.10	39
RNFCL 2020A6 **RNFCL 2020A6S**						1.7 × 4	14200	33000		
RNFCL 2525A3 **RNFCL 2525A3S**	25	25	3.969	26	22.0	1.7 × 2	11700	25800	0.12	47
RNFCL 2525A6 **RNFCL 2525A6S**						1.7 × 4	21200	51500		
RNFCL 3232A3 **RNFCL 3232A3S**	32	32	4.762	33.25	28.0	1.7 × 2	17100	40500	0.15	58
RNFCL 3232A6 **RNFCL 3232A6S**						1.7 × 4	31000	81000		
RNFCL 4040A3 **RNFCL 4040A3S**	40	40	6.35	41.75	35.0	1.7 × 2	27200	67900	0.20	73
RNFCL 4040A6 **RNFCL 4040A6S**						1.7 × 4	49300	136000		
RNFCL 5050A3 **RNFCL 5050A3S**	50	50	7.938	52.25	44.0	1.7 × 2	40600	106000	0.25	90
RNFCL 5050A6 **RNFCL 5050A6S**						1.7 × 4	73700	212000		

Ball nut dimensions: Flange A	Flange H	Flange B	Length E	Length L_n	Oil hole M	Bolt hole W	Bolt hole X	Oil hole Q	Oil hole T	Nut Mass. (kg)	Arbor: Outside dia. d_o	Arbor: Bore d_i	Screw shaft: Standard length L_s	Screw shaft No.	Shaft mass/m (kg)
44	28	6	9	30	—	35	4.5	M3 × 0.5	3.0	0.12	10.1	8.1	400 800	RS1212A**	0.74
51	35	10	11	45	— 3	42	4.5	M6 × 1	5.0	0.28	12.2	10.2	500 1000 1500	RS1520A**	1.15
53	34	10	10	38	— 3 — 3	42	4.5	M6 × 1	5.0	0.23	13.5	11.5	500 1000 1500	RS1616A**	1.37
62	41	10	11.5	46	— 3 — 3	50	5.5	M6 × 1	5.0	0.37	17.3	14.9	500 1000 2000	RS2020A**	2.19
74	49	12	13	55	— 3 — 3	60	6.6	M6 × 1	6.0	0.62	22.0	19.6	1000 2000 2500	RS2525A**	3.43
92	60	12	16	70	— 3 — 3	74	9	M6 × 1	5.5	1.10	28.0	25.6	1000 2000 3000	RS3232A**	5.71
114	75	15	19.5	85	— 3.5 — 3.5	93	11	M6 × 1	6.5	2.09	35.0	31.8	2000 3000 4000	RS4040A**	8.82
135	92	20	21.5	107	— 3.5 — 3.5	112	14	M6 × 1	7.0	3.90	44.0	40.8	2000 3000 4000	RS5050A**	13.81

Remarks 1. The actual screw shaft length may be slightly longer than nominal length Ls due to manufacturing tolerance.
2. Nut assembly with arbor and screw shaft are separated at time of delivery.
3. The value obtained by dividing the standard screw length by 100 mm will be entered at the end of the reference number where marked with "* *."
4. Items in stock are not applied surface treatment.
5. The entire length of the nut becomes longer by "2 x M " for those with a seal. The seal is "Brush-seal."

www.bergab.ru Берг АБ bergab@ya.ru Тел. (495)-228-06-21, факс (495) 223-3071

www.bergab.ru Берг АБ bergab@ya.ru Тел. (495)-228-06-21, факс (495) 223-3071

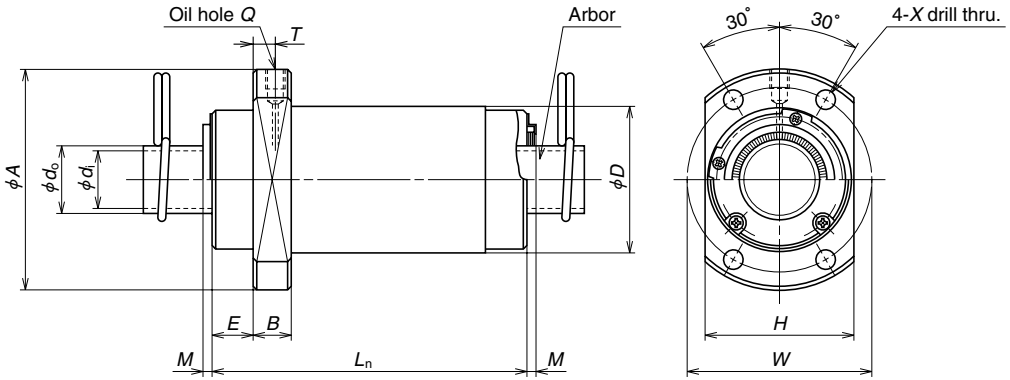

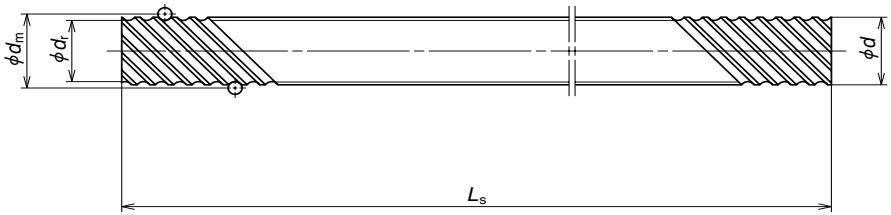

Standard stock

Unit: mm

Ball nut No.	Shaft dia. d	Lead l	Ball dia. D_w	Ball circle dia. d_m	Root dia. d_r	Effective turns of balls: Turns × Circuits	Basic load rating (N) Dynamic C_a	Basic load rating (N) Static C_{0a}	Axial play Max.	Ball nut dimensions: Outside dia. D
RNFCL 1632A2	16	32	2.778	16.65	13.5	0.7 × 4	4600	8460	0.10	32
RNFCL 1632A2S										
RNFCL 1632A3						1.7 × 2	5430	10400		
RNFCL 1632A3S										
RNFCL 1632A6						1.7 × 4	9860	20800		
RNFCL 1632A6S										
RNFCL 2040A2	20	40	3.175	20.75	17.3	0.7 × 4	6610	13600	0.10	38
RNFCL 2040A2S										
RNFCL 2040A3						1.7 × 2	7810	16500		
RNFCL 2040A3S										
RNFCL 2040A6						1.7 × 4	14200	33000		
RNFCL 2040A6S										
RNFCL 2550A2	25	50	3.969	26	22.0	0.7 × 4	9870	21200	0.12	46
RNFCL 2550A2S										
RNFCL 2550A3						1.7 × 2	11700	25800		
RNFCL 2550A3S										
RNFCL 2550A6						1.7 × 4	21200	51500		
RNFCL 2550A6S										
RNFCL 3264A3	32	64	4.762	33.25	28.0	1.7 × 2	17100	40500	0.15	58
RNFCL 3264A3S										
RNFCL 3264A6						1.7 × 4	31000	81000		
RNFCL 3264A6S										
RNFCL 4080A3	40	80	6.350	41.75	35.0	1.7 × 2	27200	67900	0.20	73
RNFCL 4080A3S										
RNFCL 4080A6						1.7 × 4	49300	136000		
RNFCL 4080A6S										

Ball nut dimensions: Flange A	Flange H	Flange B	Length E	Length L_n	Length M	Bolt hole W	Bolt hole X	Oil hole Q	Oil hole T	Nut Mass. (kg)	Arbor: Outside dia. d_0	Arbor: Bore d_i	Screw shaft: Standard length L_s	Screw shaft No.	Shaft mass/m (kg)
50	34	10	10	34	—	41	4.5	M6 × 1	5.5	0.21	13.5	11.5	500 1000 1500	RS1632A**	1.34
					3										
				66	—					0.33					
					3										
				66	—					0.33					
					3										
58	40	10	11	41	—	48	5.5	M6 × 1	5.5	0.31	17.3	14.9	500 1000 1500 2000	RS2040A**	2.15
					3										
				81	—					0.53					
					3										
				81	—					0.53					
					3										
70	48	12	13	50	—	58	6.6	M6 × 1	7.0	0.53	22.0	19.6	1000 2000 2500	RS2550A**	3.37
					3										
				100	—					0.91					
					3										
				100	—					0.91					
					3										
92	60	12	15.5	126	—	74	9	M6 × 1	7.5	1.76	28.0	25.6	1000 2000 3000 4000	RS3264A**	5.63
					3										
					—										
					3										
114	75	15	19	158	—	93	11	M6 × 1	10	3.44	35.0	31.8	2000 3000 4000 5000	RS4080A**	8.69
					3.5										
					—										
					3.5										

Remarks 1. The actual screw shaft length may be slightly longer than nominal length Ls due to manufacturing tolerance.
2. Nut assembly with arbor and screw shaft are separated at time of delivery.
3. The value obtained by dividing the standard screw length by 100 mm will be entered at the end of the reference number where marked with "* *."

Remarks 4. Items in stock are not applied surface treatment.
5. The entire length of the nut becomes longer by "2 x M " for those with a seal. The seal is "Brush-seal."

www.bergab.ru Берг АБ bergab@ya.ru Тел. (495)-228-06-21, факс (495) 223-3071

www.bergab.ru Берг АБ bergab@ya.ru Тел. (495)-228-06-21, факс (495) 223-3071

B-I-6.6 Accessories

Accessories to use with ball screw are available in stock.

Table I-6•6 Support unit categories

Application		Shape	Support side	Bearing in use	Bearing bore Bearing seat diameter	Page
Small equipment, light load	Square	WBK**-01	Fixed support side	Angular contact ball bearing	φ6～φ25	B281～
		WBK**S-01	Simple support side	Deep groove ball bearing	φ6～φ25	B283～
		WBK**SF-01		Deep groove ball bearing	φ12, φ15 (Exclusive for VFA Series)	B288

Application		Shape	Support side	Bearing in use	Bearing bore Bearing seat diameter	Page
Small equipment, light load	Round	WBK**R-11 (Support kit)	Fixed support side	Deep groove ball bearing (arranged to have angular contact)	φ4, φ6 (Exclusive for RMA and RMS Series)	B287
		WBK**-11		Angular contact ball bearing	φ6～φ25	B285～
Machine tools, heavy load	Round	WBK**DF*-31	Fixed support side	Thrust angular contact ball bearing	φ17～φ40	B291～

① **Classification**

Ball screw support units are classified into categories by their shape (Table I-6.6). Select the type that is appropriate for you to use.

② **Features**

●Short delivery time: Standardized items in stock

●Use most suitable bearings

On the fixed support side, the angular contact ball bearing is used. It has great rigidity and low friction torque which match the rigidity of the ball screw. The thrust angular contact ball bearing with high precision and great rigidity is another choice for the fixed support side.

●High dust prevention, and low friction torque

Oil seal is installed on the fixed support side. A deep-groove ball bearing with a shield on both sides is used on the simple support side. This minimizes friction torque.

●Lock nut is provided.

A lock nut of fine grade finish is provided to fix the bearing with high precision.

③ **Configuration of reference number**

www.bergab.ru Берг АБ bergab@ya.ru Тел. (495)-228-06-21, факс (495) 223-3071

www.bergab.ru Берг АБ bergab@ya.ru Тел. (495)-228-06-21, факс (495) 223-3071

③ **Reference number coding**

(For light load)

Example : **WBK 08 S - 01 A**

Product code for support unit

Nominal size code*

Mounting code
No code:Fixed support unit
S:Simple support unit
SF:Simple support unit (for VFA)
R:Fixed support unit (support kit for miniature ball screws)

01: Square type
11: Round type

No code or A: For general use
C: For clean environment use

✻ In case of simple support unit, be careful that 12 or less size codes do not represent internal bores of bearing. Please refer to the dimensional table for internal bore of bearing.

(For heavy load)

Example : **WB/BK 25 DF - 31**

Product code for support unit

Nominal size code (internal bore of bearing)

Bearing combination code
DF : Face to face duplex combination
DFD : Face to face triplex combination
DFF : Face to face quadruplex combination

Design serial number

(1) Support Units for Light Load and Small Equipment

Support units for light load and small equipment provide both fixed and support side bearing assemblies to support screw shafts. They provide all required parts such as bearing locknuts so that you can mount them directly to NSK standard ball screws, of which shaft ends are machined.

Please refer to the dimensions listed on the dimension table for configuration of standard screw shaft ends for NSK standard ball screws with blank shaft ends. For rolled ball screws, you require optional spacers when mounting fixed support side support units.

①**Features**

●Prompt delivery

All support units are standard stocked items.

●Best selection of bearings for your application

General use support units for fixed support side are equipped with highly rigid angular contact ball bearings that have been assembled with proper preload, and packed with the appropriate volume of grease. On the other hand, clean support units for fixed support side uses low dust emission grease, and low torque special bearings. Sealed deep groove ball bearings are used for simple support side units for both general and clean environment use.

www.bergab.ru Берг АБ bergab@ya.ru Тел. (495)-228-06-21, факс (495) 223-3071

www.bergab.ru Берг АБ bergab@ya.ru Тел. (495)-228-06-21, факс (495) 223-3071

●Accessories

Support units provide everything necessary for mounting ball screws to machines.
(Please refer to the table below.)
* Do not disassemble fixed support side units as they are equipped with bearings and oil seals.

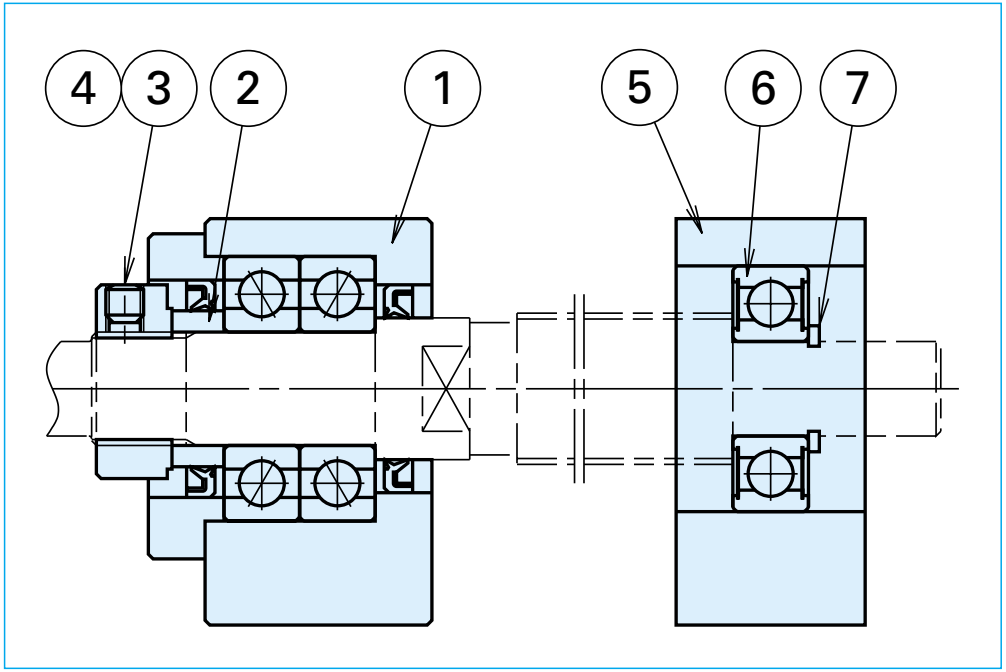

●Antirust treatment

The table on the right shows the surface treatment for the bearing housing, and material of small parts.

Fixed support side		Simple support side	
Part no.	Name of parts	Part no.	Name of parts
①	Bearing housing	⑤	Bearing housing
②	Spacer	⑥	Bearing
③	Locknut	⑦	Snap ring
④	Set screw with set piece		

	General support unit
Bearings and grease	Angular contact ball bearings, PS2
Surface treatment	Black oxide
Screws and snap rings	Standard material

⑥**Features of Clean Support Unit**

●Outstanding low dust emission

Clean support unit uses "NSK clean grease LG2" which has a proven feature of low dust emission. It reduces dust emission to 1/10 of general support units.

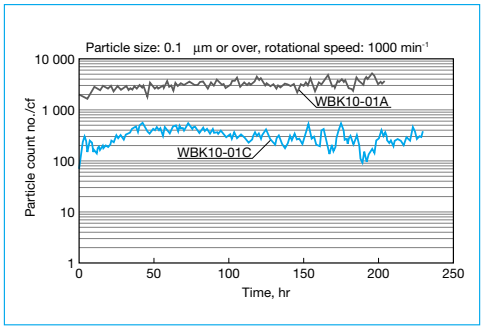

●Low torque

It features low torque characteristics because of special bearings. (50% lower than general support unit.)

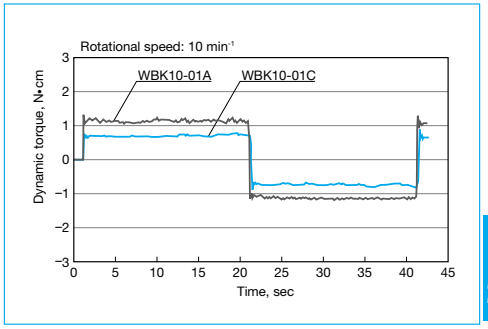

●High antirust specification

Low temperature chrome plating is applied to bearing housings, retaining plates, locknuts and spacers to improve antirust properties. Moreover, bolts and snap rings are made of stainless steel.
The table below shows the surface treatment of the bearing housing and material of small parts.

	Clean support unit
Bearing • grease	Special bearings, LG2
Surface treatment	Low temperature chrome plating
Set screw and snap ring material	Stainless steel

www.bergab.ru Берг АБ bergab@ya.ru Тел. (495)-228-06-21, факс (495) 223-3071

www.bergab.ru Берг АБ bergab@ya.ru Тел. (495)-228-06-21, факс (495) 223-3071

Table I-6·7 Specifications of support unit for general use

Fixed support side support unit					Simple support side support unit		
Reference no.	Axial direction			Maximum starting torque [N·cm]	Reference no.	Bearing reference no.	Radial direction
	Basic dynamic load rating C_a [N]	Load limit [N]	Stiffness [N/μm]				Basic dynamic load rating C [N]
WBK06-01A (SQUARE) **WBK06-11** (ROUND)	2 670	1 040	28	0.49	—	—	—
WBK08-01A (SQUARE) **WBK08-11** (ROUND)	4 400	1 450	49	0.88	**WBK08S-01** (SQUARE)	606ZZ	2 260
WBK10-01A (SQUARE) **WBK10-11** (ROUND)	6 600	2 730	94	1.9	**WBK10S-01** (SQUARE)	608ZZ	3 300
WBK12-01A (SQUARE) **WBK12-11** (ROUND)	7 100	3 040	104	2.1	**WBK12S-01** (SQUARE)	6000ZZ	4 550
WBK15-01A (SQUARE) **WBK15-11** (ROUND)	7 600	3 380	113	2.4	**WBK15S-01** (SQUARE)	6002ZZ	5 600
WBK17-01A (SQUARE)	13 400	5 800	120	3.5	**WBK17S-01** (SQUARE)	6203ZZ	9 550
WBK20-01 (SQUARE) **WBK20-11** (ROUND)	17 900	8 240	155	6.0	**WBK20S-01** (SQUARE)	6204ZZ	12 800
WBK25-01 (SQUARE) **WBK25-11** (ROUND)	20 200	10 000	192	7.2	**WBK25S-01** (SQUARE)	6205ZZ	14 000
WBK04R-11 (ROUND)	615	490	6.5	0.59	—	—	—
WBK06R-11 (ROUND)	1 280	930	9	0.59	—	—	—

Table I-6·8 Clean support unit specifications

Fixed support side support unit					Simple support side support unit		
Reference no.	Axial direction			Maximum starting torque [N·cm]	Reference no.	Bearing reference no.	Radial direction
	Basic dynamic load rating C_a [N]	Load limit [N]	Stiffness [N/μm]				Basic dynamic load rating C [N]
WBK08-01C (SQUARE) **WBK08-11C** (ROUND)	3 100	1 100	36	0.52	**WBK08S-01C**	606VV	2 260
WBK10-01C (SQUARE) **WBK10-11C** (ROUND)	4 250	1 364	50	1.1	**WBK10S-01C**	608VV	3 300
WBK12-01C (SQUARE) **WBK12-11C** (ROUND)	4 700	2 443	57	1.2	**WBK12S-01C**	6000VV	4 550
WBK15-01C (SQUARE) **WBK15-11C** (ROUND)	5 100	2 757	63	1.3	**WBK15S-01C**	6002VV	5 600

www.bergab.ru Берг АБ bergab@ya.ru Тел. (495)-228-06-21, факс (495) 223-3071

www.bergab.ru Берг АБ bergab@ya.ru Тел. (495)-228-06-21, факс (495) 223-3071

Fixed support side support unit (square type)

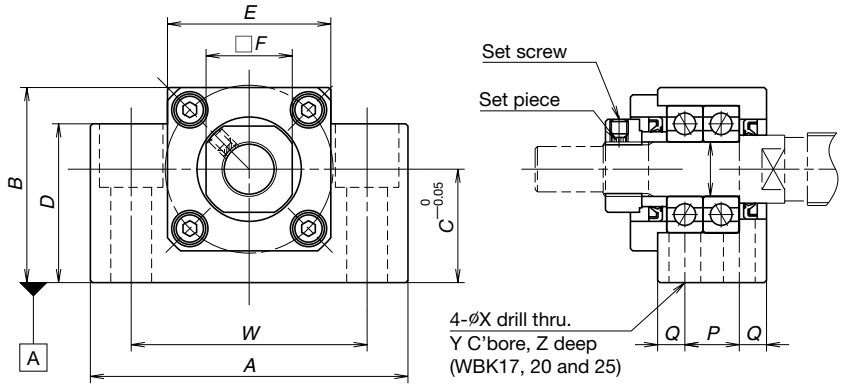

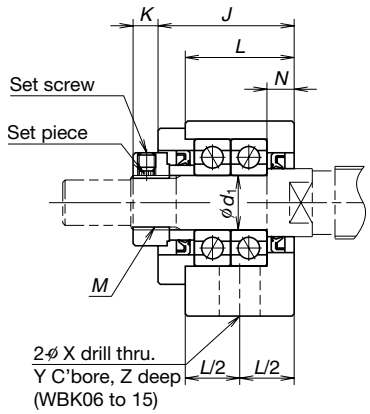

Reference no.	Locknut tightening torque (reference) [N·cm]	Set screw tightening torque (reference) [N·cm]
WBK06- ＊＊	245	69 (M3)
WBK08- ＊＊	490	69 (M3)
WBK10- ＊＊	930	147 (M4)
WBK12- ＊＊	1 370	147 (M4)
WBK15- ＊＊	2 350	147 (M4)
WBK17- ＊＊	3 145	147 (M4)
WBK20- ＊＊	4 700	147 (M4)
WBK25- ＊＊	8 400	490 (M6)

B
282

Units: mm

Reference no.		Fixed support side support unit (square type)																	
For general use	For clean environment use	d_1	A	B	C	D	E	F	J	K	L	N	P	Q	W	X	Y	Z	M
WBK06-01A	———	6	42	25	13	20	18	12	20	5.5	20	3.5	—	—	30	5.5	9.5	11	M6×0.75
WBK08-01A	**WBK08-01C**	8	52	32	17	26	25	14	23	7	23	4	—	—	38	6.6	11	12	M8×1
WBK10-01A	**WBK10-01C**	10	70	43	25	35	36	17	30	5.5	24	6	—	—	52	9	14	11	M10×1
WBK12-01A	**WBK12-01C**	12	70	43	25	35	36	19	30	5.5	24	6	—	—	52	9	14	11	M12×1
WBK15-01A	**WBK15-01C**	15	80	50	30	40	41	22	31	12	25	5	—	—	60	11	17	15	M15×1
WBK17-01A	———	17	86	64	39	55	50	24	44	7	35	7	19	8	68	9	14	11	M17×1
WBK20-01	———	20	95	58	30	45	56	30	52	10	42	10	22	10	75	11	17	15	M20×1
WBK25-01	———	25	105	68	35	25	66	36	61	13	48	14	30	9	85	11	No counter bores		M25×1.5

Notes: 1. Use datum face A to mount a machine base.
2. Tighten a set screw after a locknut is adjusted and tightened.
3. Insert the set piece that is provided with support unit to a screw hole, and then tighten the set screw.

www.bergab.ru Берг АБ bergab@ya.ru Тел. (495)-228-06-21, факс (495) 223-3071

www.bergab.ru Берг АБ bergab@ya.ru Тел. (495)-228-06-21, факс (495) 223-3071

Simple support side support unit (square type)

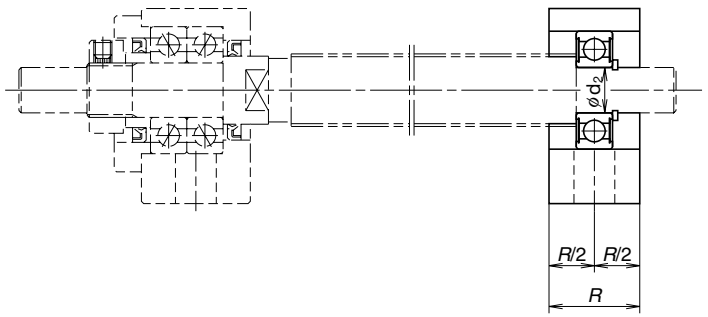

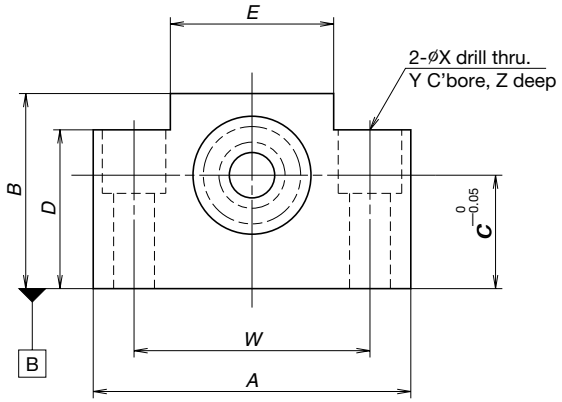

Units: mm

Reference no.		Simple support side support unit (square type)										
For general use	For clean environment use	d_2	R	A	B	C	D	E	W	X	Y	Z
WBK08S-01	**WBK08S-01C**	6	15	52	32	17	26	25	38	6.6	11	12
WBK10S-01	**WBK10S-01C**	8	20	70	43	25	35	36	52	9	14	11
WBK12S-01	**WBK12S-01C**	10	20	70	43	25	35	36	52	9	14	11
WBK15S-01	**WBK15S-01C**	15	20	80	50	30	40	41	60	9	14	11
WBK17S-01	———	17	23	86	64	39	55	50	68	9	14	11
WBK20S-01	———	20	26	95	58	30	45	56	75	11	17	15
WBK25S-01	———	25	30	105	68	35	25	66	85	11	No counter bores	

Notes: 1. Use datum face B to mount a machine base.

www.bergab.ru Берг АБ bergab@ya.ru Тел. (495)-228-06-21, факс (495) 223-3071

www.bergab.ru Берг АБ bergab@ya.ru Тел. (495)-228-06-21, факс (495) 223-3071

Fixed support side support unit (round type)

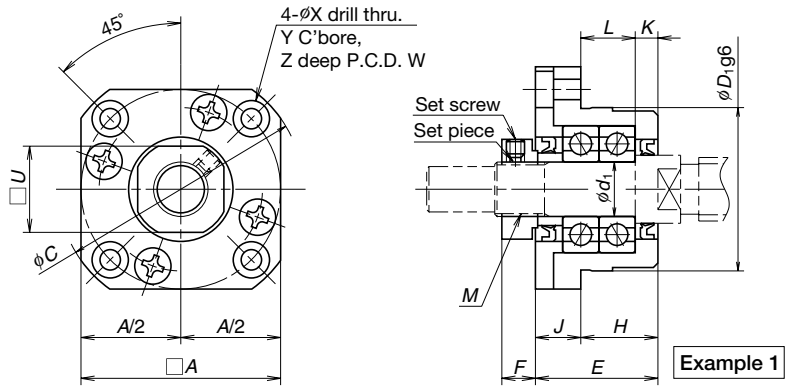

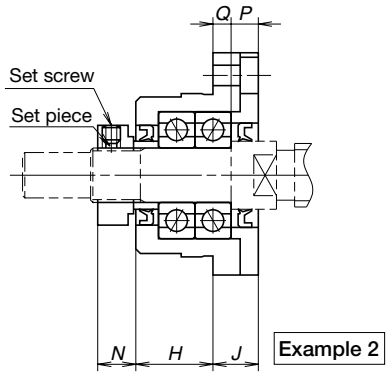

Reference no.	Locknut tightening torque (reference) [N·cm]	Set screw tightening torque (reference) [N·cm]
WBK06- ∗∗	245	69 (M3)
WBK08- ∗∗	490	69 (M3)
WBK10- ∗∗	930	147 (M4)
WBK12- ∗∗	1 370	147 (M4)
WBK15- ∗∗	2 350	147 (M4)
WBK17- ∗∗	3 145	147 (M4)
WBK20- ∗∗	4 700	147 (M4)
WBK25- ∗∗	8 400	490 (M6)

B
286

Units: mm

Reference no.		Fixed support side support unit (round type)																			
For general use	For clean environment use	d_1	A	C	D_1	E	F	H	J	K	L	N	P	Q	U	W	X	Y	Z	M
WBK06-11	———	6	28	35	22	20	5.5	13	7	3.5	9.5	6.5	4.5	2.5	12	28	2.9	5.5	3.5	M6×0.75
WBK08-11	**WBK08-11C**	8	35	43	28	23	7	14	9	4	10	8	5	4	14	35	3.4	6.5	4	M8×1
WBK10-11	**WBK10-11C**	10	42	52	34	27	7.5	17	10	5	12	8.5	6	4	17	42	4.5	8	4	M10×1
WBK12-11	**WBK12-11C**	12	44	54	36	27	7.5	17	10	5	12	8.5	6	4	19	44	4.5	8	4	M12×1
WBK15-11	**WBK15-11C**	15	52	63	40	32	12	17	15	6	11	14	8	7	22	50	5.5	9.5	6	M15×1
WBK20-11	———	20	68	85	57	52	10	30	22	10	20	14	14	8	30	70	6.6	11	10	M20×1
WBK25-11	———	25	79	98	63	57	13	30	27	10	20	20	17	10	36	80	9	15	13	M25×1.5

Notes: 1. Tighten a set screw after a locknut is adjusted and tightened.
2. Insert the set piece that is provided with support unit to a screw hole, and then tighten the set screw.

www.bergab.ru Берг АБ bergab@ya.ru Тел. (495)-228-06-21, факс (495) 223-3071

www.bergab.ru Берг АБ bergab@ya.ru Тел. (495)-228-06-21, факс (495) 223-3071

Support kits for miniature ball screws

Support kits are for the RMS precision rolled miniature ball screw series.

However, please use support units for general use in case of RMA1002 or larger rolled ball screws.

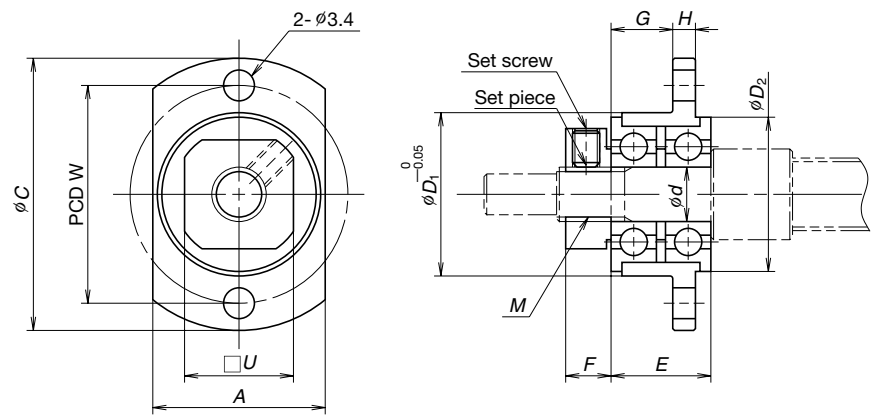

Units: mm

Reference no.	A	C	d	D_1	D_2	E	F	G	H	W	U	M
WBK04R-11	14	25	4	13	12.5	9	5	5	2.5	19	10	M4×0.5
WBK06R-11	19	30	6	18	17	11	5	6.8	2.5	24	12	M6×0.75

Reference no.	Applicable ball screw	Locknut tightening torque (reference) [N·cm]	Setscrew tightening torque (reference) [N·cm]
WBK04R-11	RMA0601	147	38 (M2.5)
WBK06R-11	RMA0801 RMA0801.5 RMA0802	245	69 (M3)

Notes:
1. Oscillate bearings slowly so that they fall into a place to make run-out of mounting face minimal, and then tighten a locknut.
2. A support kit is put on a provisional shaft (bolt) for shipping.
3. Insert the set piece that is provided with support unit to a screw hole, and then tighten the set screw.

Simple support side support units for VFA ball screws

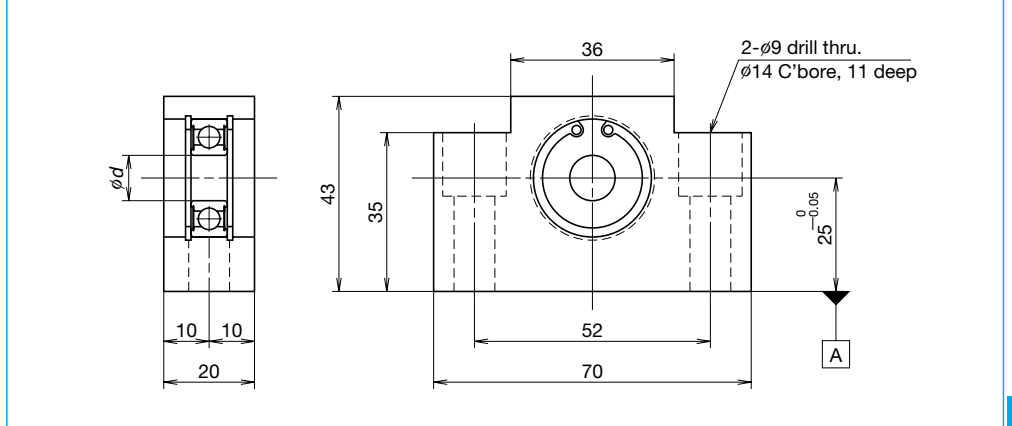

Units: mm

Reference no.	d	Applicable ball screw
WBK12SF-01	12	VFA1210
WBK15SF-01	15	VFA1510 VFA1520

Notes:
1. Use datum face A for mounting to a machine base.
2. This type is exclusively made for simple support side units for NSK VFA ball screws. This unit supports a ball screw outside of a screw shaft.

Spacer

It requires an optional spacer to the side where ball thread is cut through, such as a rolled ball screw shaft when mounting the support unit for fixed support side.

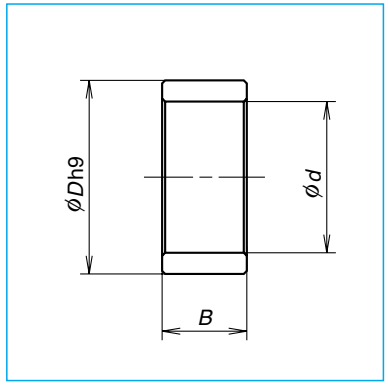

Units: mm

Reference no.	Internal diameter, d	Outside diameter, D	Width B	Applicable support unit
WBK06K	6	9.5	5.0	WBK06-＊＊
WBK08K	8	11.5	5.5	WBK08-＊＊
WBK10K	10	14.5	5.5	WBK10-＊＊
WBK12K	12	15.0	5.6	WBK12-＊＊
WBK15K	15	19.5	10.0	WBK15-＊＊
WBK17K	17	24.4	7.0	WBK17-＊＊
WBK20K	20	25.5	11.0	WBK20-＊＊
WBK25K	25	32.0	14.0	WBK25-＊＊

www.bergab.ru Берг АБ bergab@ya.ru Тел. (495)-228-06-21, факс (495) 223-3071

www.bergab.ru Берг АБ bergab@ya.ru Тел. (495)-228-06-21, факс (495) 223-3071

Screw shaft end configuration

Dimensions of shaft end configurations are shown on the table below for the light load and small equipment support units. Add a spacer width (B on the table for spacers on page 288) to L1 dimension below when using a spacer for a rolled ball screw.

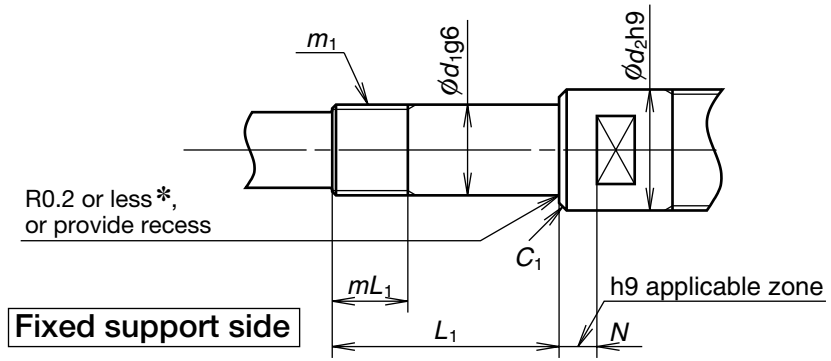

Radius marked with] above is 0.15 or less for WBK04R-11 and WBK06R-11.

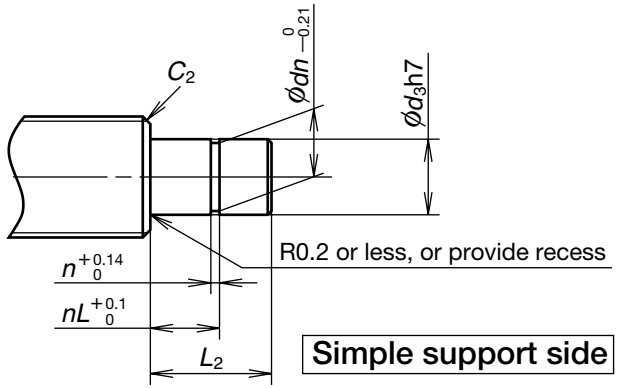

Units: mm

Reference no.	Fixed support side						
	Bearing journal		Locknut thread		Sealing part		Chamfer
	d_1	L_1	m_1	mL_1	d_2	N	C_1
WBK06- ∗∗	6	22.5	M6×0.75	7	9.5	3.5	0.2
WBK08- ∗∗	8	27	M8×1	9	11.5	4	0.2
WBK10- ∗∗	10	30	M10×1	10	14	6	0.2
WBK12- ∗∗	12	30	M12×1	10	15	6	0.2
WBK15- ∗∗	15	40	M15×1	15	19.5	5	0.3
WBK17- ∗∗	17	46	M17×1	17	24	7	0.3
WBK20- ∗∗	20	53	M20×1	16	25	10	0.3
WBK25- ∗∗	25	62	M25×1.5	20	32	14	0.5
WBK04R-11	4	15	M4×0.5	7.5	—	—	0.3
WBK06R-11	6	17	M6×0.75	7.5	—	—	0.3

Units: mm

Reference no.	Simple support side					
	Bearing journal		Snap ring groove			Chamfer
	d_3	L_2	n	dn	nL	C_2
————	—	—	—	—	—	—
WBK08S- ∗∗	6	9	0.8	5.7	6.8	0.2
WBK10S- ∗∗	8	10	0.9	7.6	7.9	0.2
WBK12S- ∗∗	10	22	1.15	9.6	9.15	0.5
WBK15S- ∗∗	15	25	1.15	14.3	10.15	0.5
WBK17S- ∗∗	17	16	1.15	16.2	13.15	0.5
WBK20S- ∗∗	20	19	1.35	19	15.35	0.5
WBK25S- ∗∗	25	20	1.35	23.9	16.35	0.5

www.bergab.ru Берг АБ bergab@ya.ru Тел. (495)-228-06-21, факс (495) 223-3071

www.bergab.ru Берг АБ bergab@ya.ru Тел. (495)-228-06-21, факс (495) 223-3071

(2) Dimensions of support unit: heavy-load / for machine tools

Support units for heavy-load / machine tools use a thrust angular contact ball bearing (TAC Series) with high rigidity and accuracy. The thrust angular contact ball bearing has very suitable functions and structure as a ball screw support bearing. There are three combinations as shown below.

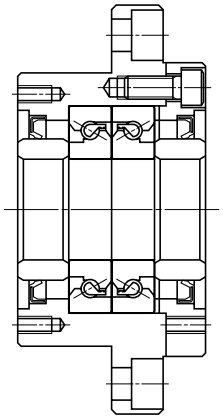

DF combination

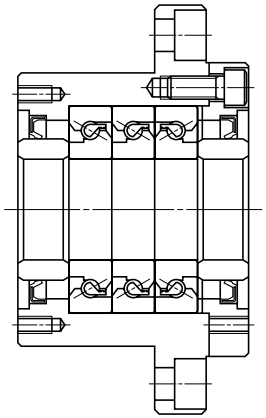

DFD combination

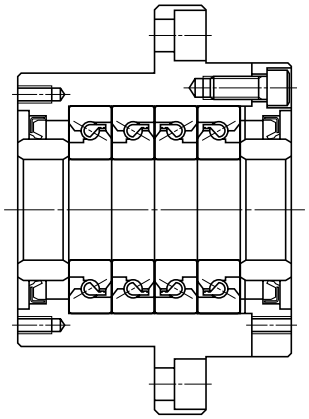

DFF combination

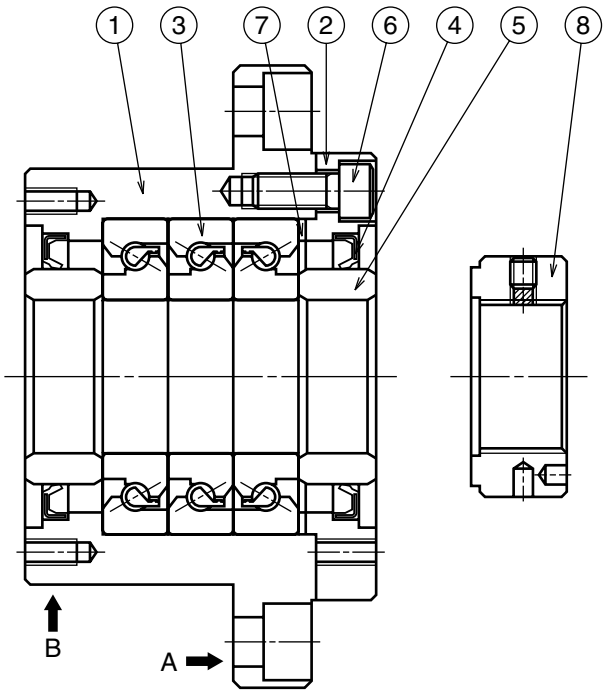

Parts list

Part number	Part name	Quantity
①	Housing	1
②	Retaining cover	1
③	High accuracy thrust angular contact ball bearing	One set
④	Dust seal	2
⑤	Collar	2
⑥	Preload bolt	6 or 8
⑦	Shim	One set
⑧	Lock nut	1

Remarks

1. Mount sections A and B to the machine base.
2. NSK support units are precisely preloaded and adjusted. Components ①, ②, ③, ④, ⑥, ⑦ are assembled into a unit. Do not disassemble.
3. Grease is packed into the bearings.
4. Lock nut ⑧ is exclusively prepared for ball screw. The end face of the nut is in strict control being precisely perpendicular to the V thread. Secure the lock nut using the set screw.
   Lock nut is also available as an accessory (See page B295). Refer to Page B299 as well for high-precision thrust angular contact ball bearing (TAC Series).

www.bergab.ru Берг АБ bergab@ya.ru Тел. (495)-228-06-21, факс (495) 223-3071

www.bergab.ru Берг АБ bergab@ya.ru Тел. (495)-228-06-21, факс (495) 223-3071

Standard stock

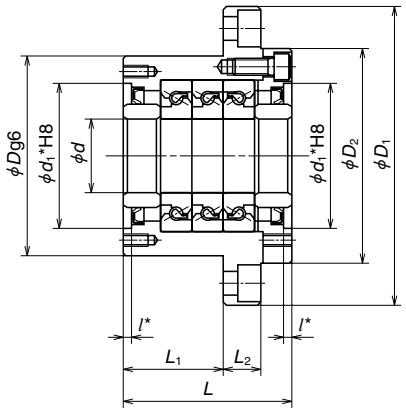

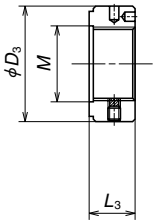

Lock nut

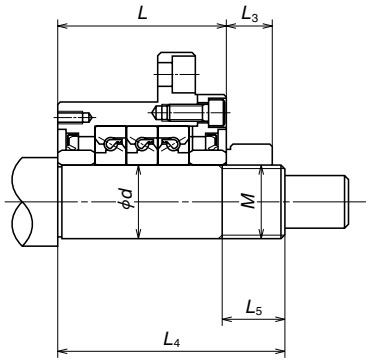

Dimensions of bearing seat

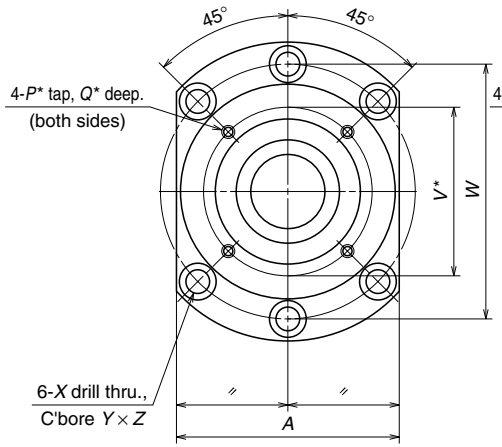

Bearing bore $d \leqq 30$

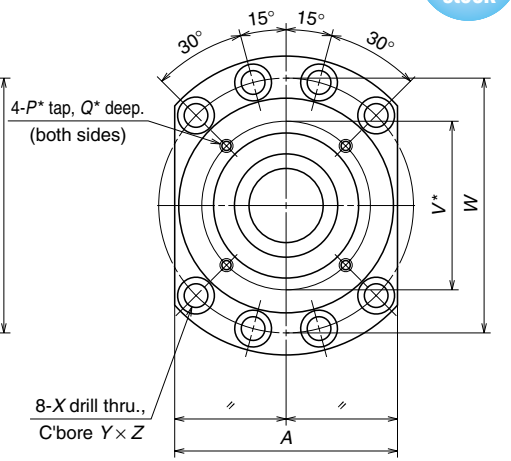

Bearing bore $d \geqq 35$

Unit: mm

Support unit No.	Support unit																
	d	D	D_1	D_2	L	L_1	L_2	A	W	X	Y	Z	d_1*	l*	V*	P*	Q*
WBK 17DF-31	17	70	106	72	60	32	15	80	88	9	14	8.5	45	3	58	M5	10
WBK 20DF-31	20	70	106	72	60	32	15	80	88	9	14	8.5	45	3	58	M5	10
WBK 25DF-31	25	85	130	90	66	33	18	100	110	11	17.5	11	57	4	70	M6	12
WBK 25DFD-31					81	48											
WBK 30DF-31	30	85	130	90	66	33	18	100	110	11	17.5	11	57	4	70	M6	12
WBK 30DFD-31					81	48											
WBK 35DF-31	35	95	142	102	66	33	18	106	121	11	17.5	11	69	4	80	M6	12
WBK 35DFD-31					81	48											
WBK 35DFF-31					96	48											
WBK 40DF-31	40	95	142	102	66	33	18	106	121	11	17.5	11	69	4	80	M6	12
WBK 40DFD-31					81	48											
WBK 40DFF-31					96	48											

Basic dynamic load rating	Permissible axial load	Preload	Axial rigidity	Maximum Starting torque	Lock nut			Mass	Bearing seat for unit		
C_a (N)	(N)	(N)	(N/μm)	(N · cm)	M	D_3	L_3	(kg)	d	L_4	L_5
21900	26600	2150	750	19	M17×1	37	18	1.9	17	81	23
21900	26600	2150	750	19	M20×1	40	18	1.9	20	81	23
28500	40500	3150	1000	29	M25×1.5	45	20	3.1	25	89	26
46500	81500	4300	1470	39				3.4		104	
29200	43000	3350	1030	30	M30×1.5	50	20	3.0	30	89	26
47500	86000	4500	1520	40				3.3		104	
31000	50000	3800	1180	34	M35×1.5	55	22	3.4	35	92	30
50500	100000	5200	1710	45				4.3		107	
50500	100000	7650	2350	59				5.0		122	
31500	52000	3900	1230	36	M40×1.5	60	22	3.6	40	92	30
51500	104000	5300	1810	47				4.2		107	
51500	104000	7850	2400	61				4.7		122	

Remarks 1. Rigidity
Values in the Table are theoretical values obtained from the elastic deformation between the groove and the balls.
2. Starting torque
Starting torque indicates torque due to the preload of the bearing. It does not include seal torque.
3. The tolerance of the shaft bearing seat
We recommend h5 class of the fits tolerance.

Remarks 4. Dimensions with * (asterisk) mark
*Pilot diameter and tapped screws marked with "asterisk *" are used for seal unit installation for NSK standard hollow shaft ball screws. They also can be used for dust cover and damper installation.
5. Grease is packed into the bearing. It is not necessary to apply grease before use.

www.bergab.ru Берг АБ bergab@ya.ru Тел. (495)-228-06-21, факс (495) 223-3071

www.bergab.ru Берг АБ bergab@ya.ru Тел. (495)-228-06-21, факс (495) 223-3071

In addition to the support units, NSK has other components for the ball screw as shown below.

(3) Lock nuts

Ball screw support bearing must be installed with minimum inclination. NSK lock nuts exclusive for ball screw help to reduce this inclination.

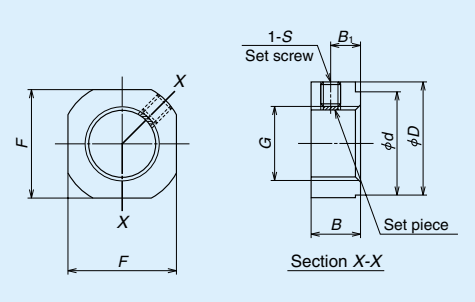

A Type Shapes and dimensions

A Type lock nuts

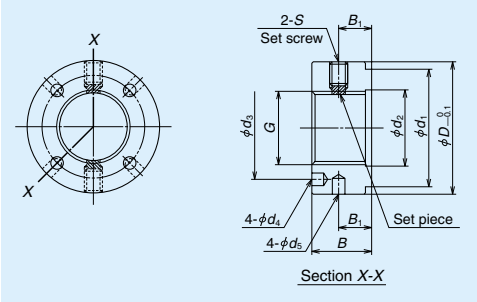

S Type Shapes and dimensions

S Type lock nuts

Unit: mm

Lock nut reference number	G	D	F	B	d	B_1	S	Tightening torque (N · cm) (for reference)	Set screw tightening torque (reference) [N · cm]
WBK06L-01	M6×0.75	14.5	12	5	10	2.7	M3, with brass made set piece	245	69 (M3)
WBK08L-01	M8×1	17	14	6.5	13	4	M3, with brass made set piece	490	69 (M3)
WBK10L-01	M10×1	20	17	8	16	5	M4, with brass made set piece	930	147 (M4)
WBK12L-01	M12×1	22	19	8	17	5	M4, with brass made set piece	1370	147 (M4)
WBK15L-01	M15×1	25	22	10	21	6	M4, with brass made set piece	2350	147 (M4)
WBK17L-01	M17×1	29	24	13	24	8	M4, with brass made set piece	2350	147 (M4)
WBK20L-01	M20×1	35	30	13	26	8	M4, with brass made set piece	4700	147 (M4)
WBK25L-01	M25×1.5	42	36	16	34	10	M6, with brass made set piece	8400	490 (M6)

Remarks: Insert a set piece (brass pad) and tighten the securing set screw.

Unit: mm

Lock nut reference number	G	$D_{-0.1}^{0}$	B	d_1	d_2	d_3	d_4	d_5	B_1	S	Tightening torque (N · cm) (for reference)	Set screw tightening torque (reference) [N · cm]
WBK17L-31	M17×1	37	18	30	18	27	4.3	4	10	M6	5400	490 (M6)
WBK20L-31	M20×1	40	18	30	21	30	4.3	4	10	M6	7350	490 (M6)
WBK25L-31	M25×1.5	45	20	40	26	35	4.3	4	11	M6	13200	490 (M6)
WBK30L-31	M30×1.5	50	20	40	31	40	4.3	5	11	M6	19600	490 (M6)
WBK35L-31	M35×1.5	55	22	50	36	45	4.3	5	12	M6	29400	490 (M6)
WBK40L-31	M40×1.5	60	22	50	41	50	4.3	5	12	M6	39200	490 (M6)

www.bergab.ru Берг АБ bergab@ya.ru Тел. (495)-228-06-21, факс (495) 223-3071

www.bergab.ru Берг АБ bergab@ya.ru Тел. (495)-228-06-21, факс (495) 223-3071

(4) Grease unit

NSK has various grease units exclusive for ball screw lubricant. They come in a bellows-shaped container which can be attached to the grease gun instantly. There are another compact grease pump. For details, refer to Page D20.

NSK greases

Table I-6•11 Lubricant greases

Name	Use	Base oil viscosity mm²/s (40°C)
NSK Grease AS2	For heavy load	130
NSK Grease PS2	High-speed, light load	15
NSK Grease LR3	High-speed, medium load	30
NSK Grease LG2	Clean environment	30
NSK Grease LGU	Clean environment	100

(5) Travel stopper (by order)

A travel stopper is installed in some cases to prevent the nut from overrunning due to the malfunction of the safety system of the equipment or by human error. NSK has several types of series of shock-absorbing travel stoppers. Please request NSK for installation. The travel stopper is not sold as a single item since it does not have a general use. Also, a travel stopper cannot be used for end cap type recirculation system, because the stopper would come directly into contact with the ball recirculating portion.

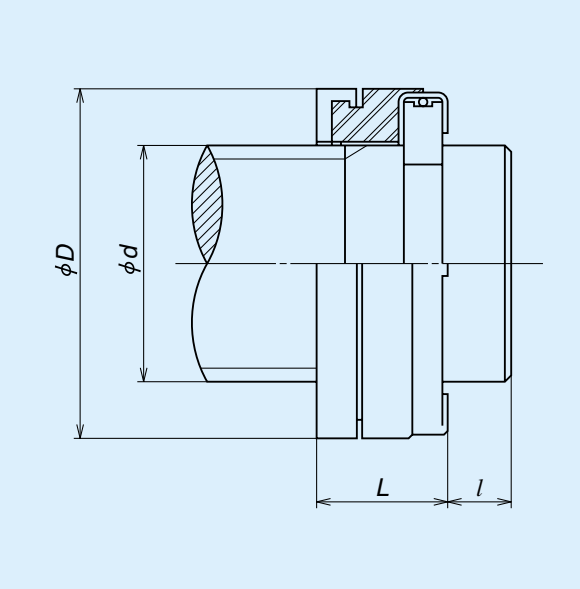

Travel stopper dimensions Unit: mm

stopper No.	Applicable shaft dia. *d*	Outer dia. *D*	Length *L*	Shaft end width (Min.) *l*
BSR 20	20	32	16	5
BSR 25	25	38	16	5
BSR 32	32	46	20	6
BSR 40	40	60	22	6
BSR 50	50	72	24	7
BSR 63	63	85	25	7

Remarks: This stopper is patented by NSK Ltd.

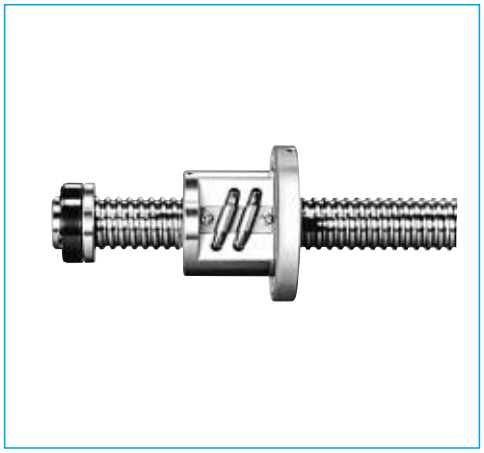

Shock-absorbing travel stopper

www.bergab.ru Берг АБ bergab@ya.ru Тел. (495)-228-06-21, факс (495) 223-3071

www.bergab.ru Берг АБ bergab@ya.ru Тел. (495)-228-06-21, факс (495) 223-3071

B-I-6.7 Thrust Angular Contact Ball Bearing for Ball Screw

(1) Features

This is highly rigid and accurate ball screw support bearing often used for the machine tool driving mechanism.

① High axial rigidity
Uses many balls, and set high contact angle at 60 degrees.

② Small friction torque
Friction torque is smaller than that of tapered or cylindrical roller bearing. This contributes to accurate rotation by a small driving power.

③ Axial play is pre-adjusted
Combination bearings are already adjusted to a suitable preload. Universal combination bearing (SU) furnishes certain preload for all combinations (DB, DF, and other).

④ Simple mounting structure
A duplex combination of bearings can receive axial and radial loads. Therefore, the installation structure is simpler than when both a thrust bearing and a radial bearing are used.

⑤ Easy handling
Inner and outer rings are inseparable, and are easy to handle.

⑥ Superb polyamide resin retainer
Uses polyamide resin retainer which is superb to friction and furnishes high precision rotations.

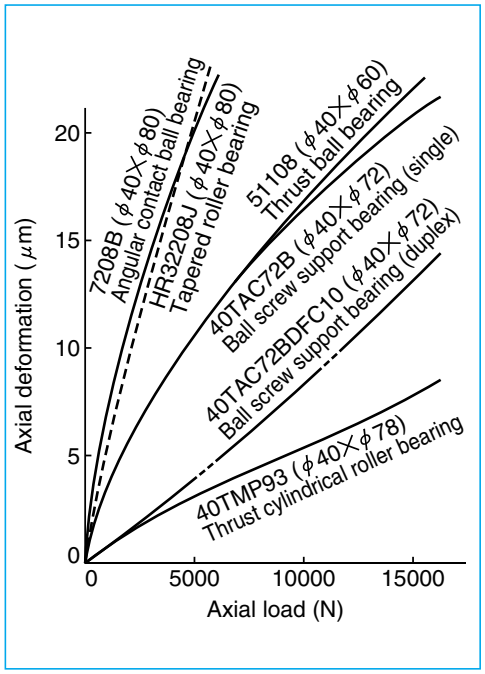

Fig. I-6•1 Axial rigidity of various bearings

Table I-6•12 Comparison with other types of bearings

Bearing type	Bearing rigidity (See Fig. 1.1)	Starting torque	Preload adjustment	Installation structure
Thrust angular contact ball bearing for NSK precision ball screw support unit	High	Low	Not required	Simple
Combined angular contact ball bearing	Low	Low	Not required	Simple
Combination of tapered roller bearings	Low	High	Complicated	Simple
Thrust ball bearing and radial bearing	High	Low	Complicated	Complicated
Thrust cylindrical roller bearing and radial bearing	Extremely high	Extremely high	Complicated	Complicated

Note : Consult NSK when you use these bearings other than the purpose of ball screw support.

(2) Composition of reference number

30 TAC 62 B DF C10 PN7A

- 30 — Bearing bore (mm)
- TAC — Bearing model code
- 62 — Bearing outside diameter (mm)
- B — Internal design code
- DF — Combination code
- C10 — Axial play code
- PN7A — Accuracy

Remark : As "30 TAC 62 B," any part of the first half of the reference number is referred to as "nominal size" in this catalogue.

www.bergab.ru Берг АБ bergab@ya.ru Тел. (495)-228-06-21, факс (495) 223-3071

www.bergab.ru Берг АБ bergab@ya.ru Тел. (495)-228-06-21, факс (495) 223-3071

(3) Bearing combinations

Generally, a set uses more than two pieces (referred to as 'two rows') of bearings and, thus the preload is applied.
There are two types of combination:

- Bearing combination
  Bearings are adjusted as a single combined set. Since the bearing alignment is pre-set, there is no interchangeability;
- Universal combination bearing (SU)
  A combination of independent bearings, which is manufactured as a single bearing. Bearings are randomly-matched to obtain required preload by more than one of randomly picked up bearings.

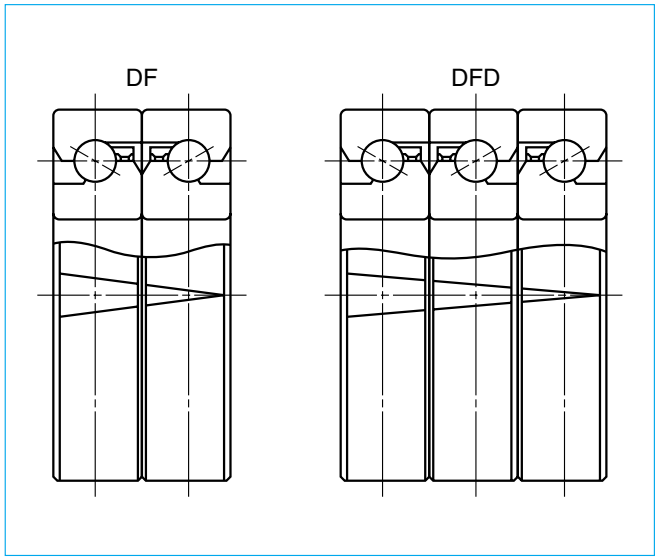

Fig. I-6•2 Examples of combination and "V" mark

1. Bearing combination
- Figure I-6•2 shows examples of combinations. There is "V" mark on the outside surface of the bearing to avoid misarrangement. A complete letter "V" should be formed when all bearings align correctly to form a set.
- DF combination which easily absorbs misalignment with the ball screw nut is used in general.

2. Universal combination bearing (SU)
- Unlike the above case, marks on the bearing outside surface do not form a letter "V." The tip of the "V" on each bearing simply indicates the direction to which axial load can be applied.

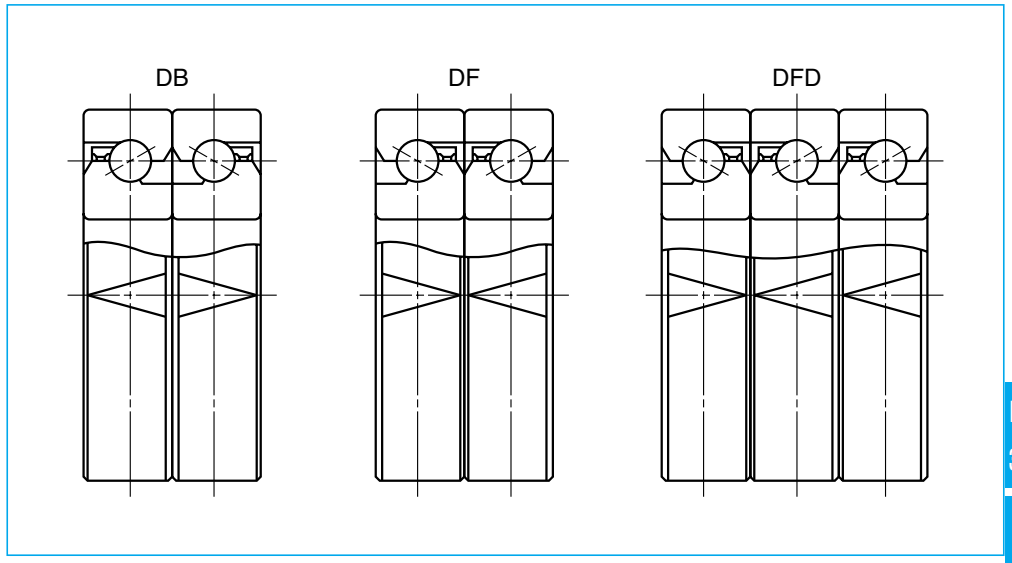

Fig. I-6•3 Example of universal combination (SU) and "V" mark

www.bergab.ru Берг АБ bergab@ya.ru Тел. (495)-228-06-21, факс (495) 223-3071

www.bergab.ru Берг АБ bergab@ya.ru Тел. (495)-228-06-21, факс (495) 223-3071

(4) Preload, rigidity, and starting torque

The table below shows preload, rigidity (spring modulus), and starting torque with grease lubrication. (The starting torque should be 1.4 times higher when oil is used as a lubricant.)
Consult NSK for the bearing combinations not included in the Table.

Table I-6•13 Preload, rigidity, and starting torque

Reference number	Duplex combination DF				Triplex combination DFD				Quadruplet combination DFF			
	Axial play code	Preload (N)	Rigidity (N/μm)	Starting torque (N · m)	Axial play code	Preload (N)	Rigidity (N/μm)	Starting torque (N · m)	Axial play code	Preload (N)	Rigidity (N/μm)	Starting torque (N · m)
15TAC 47B	C10	2150	750	0.14	C10	2950	1080	0.20	C10	4300	1470	0.29
17TAC 47B	C10	2150	750	0.14	C10	2950	1080	0.20	C10	4300	1470	0.29
20TAC 47B	C10	2150	750	0.14	C10	2950	1080	0.20	C10	4300	1470	0.29
25TAC 62B	C10	3150	1000	0.23	C10	4300	1470	0.31	C10	6250	1960	0.46
30TAC 62B	C10	3350	1030	0.24	C10	4500	1520	0.33	C10	6650	2010	0.49
35TAC 72B	C10	3800	1180	0.28	C10	5200	1710	0.37	C10	7650	2350	0.55
40TAC 72B	C10	3900	1230	0.28	C10	5300	1810	0.38	C10	7850	2400	0.57
40TAC 90B	C10	5000	1320	0.48	C10	6750	1960	0.65	C10	10300	2650	0.96
45TAC 75B	C10	4100	1270	0.29	C10	5600	1910	0.40	C10	8250	2550	0.59
45TAC 100B	C10	5900	1520	0.58	C10	8050	2210	0.78	C10	11800	3000	1.16
50TAC 100B	C10	6100	1570	0.60	C10	8250	2300	0.80	C10	12300	3100	1.18
55TAC 100B	C10	6100	1570	0.60	C10	8250	2300	0.80	C10	12300	3100	1.18
55TAC 120B	C10	6650	1760	0.64	C10	9100	2650	0.86	C10	13200	3550	1.27
60TAC 120B	C10	6650	1760	0.64	C10	9100	2650	0.86	C10	13200	3550	1.27

(5) Accuracy

① Accuracy grades

Uses NSK standard PN7A and PN7B which are equivalent to JIS4 grade of the radial ball bearing.
Combined bearing ——————— PN7A
Universal combination bearing ——— PN7B
However, PN7A is stricter than JIS4 grade regarding axial run out of inner and outer rings. PN7B is stricter regarding the tolerance of the bore and outside diameter (Table I-6•14).

② Fits

Table I-6•15 shows recommended values of the tolerance of shaft and housing bore.

Table I-6•14 Tolerance: thrust angular contact ball bearing for ball screw support

Unit: μm

Nominal size of bearing bore or outside diameter (mm)		Tolerance of bore				Tolerance of outside diameter				Tolerance of inner ring width		Axial run out of inner or outer ring
		Accuracy grade				Accuracy grade				Accuracy grade		Accuracy grade
		PN7A		PN7B		PN7A		PN7B		PN7A PN7B		PN7A PN7B
over	or less	upper	lower	upper	lower	upper	lower	upper	lower	upper	lower	Maximum
10	18	0	–4	0	–4	–	–	–	–	0	–80	2.5
18	30	0	–5	0	–4	–	–	–	–	0	–120	2.5
30	50	0	–6	0	–4	0	–6	0	–4	0	–120	2.5
50	80	0	–7	0	–5	0	–7	0	–5	0	–150	2.5
80	120	0	–8	0	–6	0	–8	0	–6	0	–200	2.5

Remarks : The tolerance of the outer ring width is the same as that of the inner ring width of the same bearing.

Table I-6•15 Tolerance of shaft bearing seat and housing bore

Unit: μm

Size of shaft or housing bore (mm)		Tolerance of shaft bearing seat h5		Tolerance of housing hole H6	
over	or less	upper	lower	upper	lower
10	18	0	–8	–	–
18	30	0	–9	–	–
30	50	0	–11	+16	0
50	80	0	–13	+19	0
80	120	0	–15	+22	0

www.bergab.ru Берг АБ bergab@ya.ru Тел. (495)-228-06-21, факс (495) 223-3071

www.bergab.ru Берг АБ bergab@ya.ru Тел. (495)-228-06-21, факс (495) 223-3071

****TAC**B**

Nominal contact angle 60 degrees

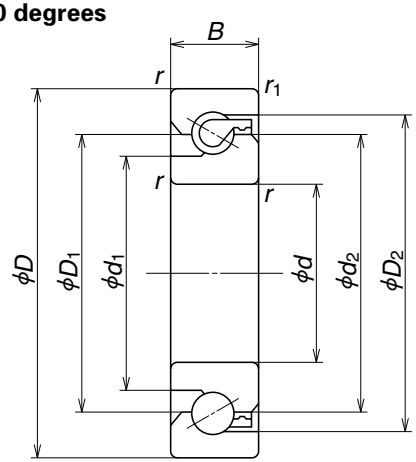

Dynamic equivalent load $P_a = XF_r \times F_a$

Bearing configuration / Combination code / Number of the row that receives axial load		Duplex		Triplex			Quadruplet		
		DF	DT	DFD		DTD	DFT	DFF	DFT
$e=2.17$		One row	Two rows	One row	Two rows	Three rows	One row	Two rows	Three rows
$F_a/F_r \leqq e$	X	1.9	–	1.43	2.33	–	1.17	2.33	2.53
	Y	0.54	–	0.77	0.35	–	0.89	0.35	0.26
$F_a/F_r > e$	X	0.92	0.92	0.92	0.92	0.92	0.92	0.92	0.92
	Y	1	1	1	1	1	1	1	1

External dimensions (mm)					Dimensions (mm)				Permissible rotational speed (min^{-1})		Bearing No.	Basic dynamic load rating C_a			Permissible axial load			Mass (kg)
d	D	B	r Min.	r_1 Min.	d_1	d_2	D_1	D_2	Grease lubrication	Oil lubrication		One row sustaining load DF (N)	Two rows sustaining load DT、DFD、DFF (N)	Three rows sustaining load DTD、DFT (N)	One row sustains load DF (N)	Two rows sustain load DT、DFD、DFF (N)	Three rows sustain load DTD、DFT (N)	(Reference)
15	47	15	1	0.6	27.2	34	34	39.6	6000	8000	**15TAC 47B**	21900	35500	47500	26600	53000	79500	0.144
17	47	15	1	0.6	27.2	34	34	39.6	6000	8000	**17TAC 47B**	21900	35500	47500	26600	53000	79500	0.144
20	47	15	1	0.6	27.2	34	34	39.6	6000	8000	**20TAC 47B**	21900	35500	47500	26600	53000	79500	0.135
25	62	15	1	0.6	37	45	45	50.7	4500	6000	**25TAC 62B**	28500	46500	61500	40500	81500	122000	0.252
30	62	15	1	0.6	39.5	47	47	53.2	4300	5600	**30TAC 62B**	29200	47500	63000	43000	86000	129000	0.224
35	72	15	1	0.6	47	55	55	60.7	3600	5000	**35TAC 72B**	31000	50500	67000	50000	100000	150000	0.310
40	72	15	1	0.6	49	57	57	62.7	3600	4800	**40TAC 72B**	31500	51500	68500	52000	104000	157000	0.275
40	90	20	1	0.6	57	68	68	77.2	3000	4000	**40TAC 90B**	59000	95500	127000	89500	179000	269000	0.674
45	75	15	1	0.6	54	62	62	67.7	3200	4300	**45TAC 75B**	33000	53500	71000	57000	114000	170000	0.270
45	100	20	1	0.6	64	75	75	84.2	2600	3600	**45TAC 100B**	61500	100000	133000	99000	198000	298000	0.842
50	100	20	1	0.6	67.5	79	79	87.7	2600	3400	**50TAC 100B**	63000	102000	136000	104000	208000	310000	0.778
55	100	20	1	0.6	67.5	79	79	87.7	2600	3400	**55TAC 100B**	63000	102000	136000	104000	208000	310000	0.714
55	120	20	1	0.6	82	93	93	102.2	2200	3000	**55TAC 120B**	67500	109000	145000	123000	246000	370000	1.23
60	120	20	1	0.6	82	93	93	102.2	2200	3000	**60TAC 120B**	67500	109000	145000	123000	246000	370000	1.16

Note : (1) Values are based on a standard preload (C10).

* "Row" means the quantity of bearings that receive axial load. "Two rows" means two bearings are receiving axial load.

www.bergab.ru Берг АБ bergab@ya.ru Тел. (495)-228-06-21, факс (495) 223-3071

www.bergab.ru Берг АБ bergab@ya.ru Тел. (495)-228-06-21, факс (495) 223-3071

T Type	B309
D Type	B353
M Type	B375
L Type	B383
U Type	B399
HMC	B405
HTF	B411

B-I-7 Custom Made Ball Screw Series: Dimension Table and Model Number

BALL SCREWS
Custom-Made Items

www.bergab.ru Берг АБ bergab@ya.ru Тел. (495)-228-06-21, факс (495) 223-3071

www.bergab.ru Берг АБ bergab@ya.ru Тел. (495)-228-06-21, факс (495) 223-3071

B-I-7.1 T Type (Return tube type, fine lead) Ball Screws

(1) Product categories

T Type ball screws use return tube recirculation system which is price competitive and suitable for large volume production. There are several models by difference in the preload system (Table I-7•1).

Table I-7•1 Classification of T Type ball screws

Nut models	Shape	Flange shape	Preload system	Nut length	Page
SFT		Flanged d=16 or under Rectangle d=20 or over Circular I Circular II	Non-preload, Slight axial play	Short	B311
PFT		Flanged d=16 or under Rectangle d=20 or over Circular I Circular II	P preload (light preload) Spacer ball 1:1	Short	B323
ZFT	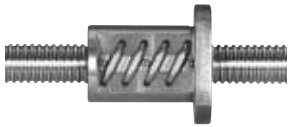	Flanged d=20 or over Circular I Circular II	Z preload (medium preload)	Medium	B329
DFT		Flanged d=20 or over Circular I Circular II	D preload (medium preload) (heavy preload)	Long	B335
DFFT		Flanged to flanged Circular I	D preload (medium preload) (heavy preload)	Long	B345
GSCT (General industrial use, extra-large)	Accuracy grade is Ct10.	No flange	Non-preload, Slight axial play	Projecting-tube type	B351

(2) Special ball screw specifications

Other than specified in "Screw shaft diameter/lead combinations" of JIS B1192, the combinations of medium size screw shaft diameter are added to T type series as the standard specifications.

◇Appearance of ball nut

In the standard specification, the recirculation return tube is contained within the outer circumference of the ball nut. On request, NSK also makes "projecting-tube" type for smaller outside diameter.

◇Shaft diameter/lead combinations

NSK makes non-standard shaft diameter/lead combinations as well as leads of special specifications such as "inch" leads and "π"- leads on request.

◇Flange shape/size

NSK makes nut flanges of special shapes and sizes. Please consult NSK.

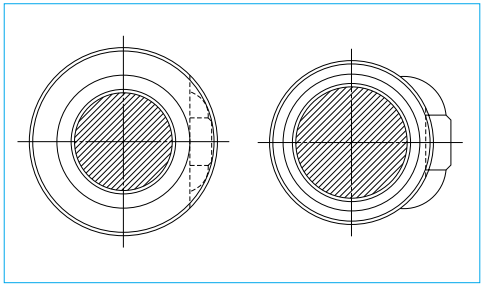

Fig. I-7•1 Nut appearance

(3) Ball nut model number

A model number that indicates specification factors is structured as shown below.

(Example) Nut model SFT; shaft diameter 10 mm; lead 4 mm; effective turns of balls 2.5* (Note)

SFT 10 04 – 2.5

Nut model — Screw shaft diameter (mm) — Lead (mm) — Effective turns of balls

* Note: In case of Z preload, the number here is twice as large as the effective turns of balls.

www.bergab.ru Берг АБ bergab@ya.ru Тел. (495)-228-06-21, факс (495) 223-3071

www.bergab.ru Берг АБ bergab@ya.ru Тел. (495)-228-06-21, факс (495) 223-3071

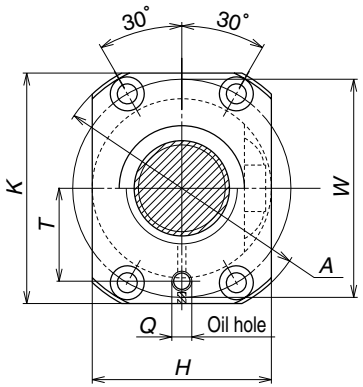

Rectangular shape
Screw shaft dia. $d \leqq 16$mm

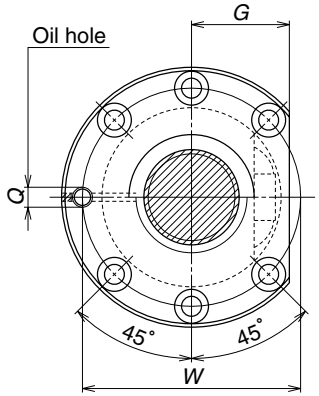

Circular shape II (semi-circular)

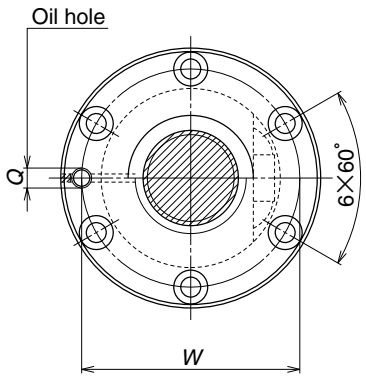

Circular shape I

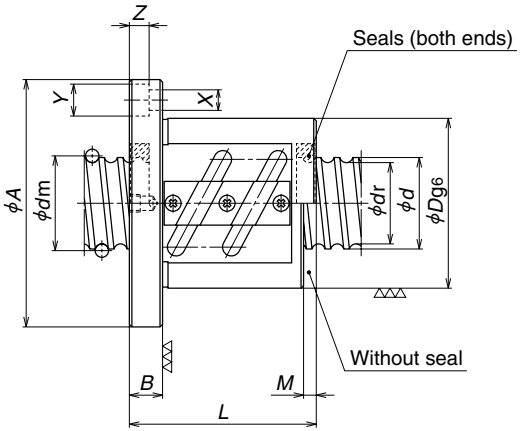

Unit: mm

Model No.	Shaft dia. d	Lead l	Ball dia. D_w	Ball circle dia. d_m	Root dia. d_r	Effective turns of balls Turns × Circuits	Basic load rating (N) Dynamic C_a	Static C_{0a}
SFT 1004-2.5	10	4	2.000	10.3	8.2	2.5×1	2740	4450
SFT 1204-2.5 **SFT 1204-3**	12	4	2.381	12.3	9.8	2.5×1 1.5×2	3760 4390	6310 7580
SFT 1205-2.5 **SFT 1205-3**		5	2.381	12.3	9.8	2.5×1 1.5×2	3760 4390	6310 7580
SFT 1405-2.5 **SFT 1405-5**	14	5	3.175	14.5	11.2	2.5×1 2.5×2	6790 12300	11700 23400
SFT 1604-2.5 **SFT 1604-3**	16	4	2.381	16.3	13.8	2.5×1 1.5×2	4300 5040	8530 10300
SFT 1605-2.5 **SFT 1605-3** **SFT 1605-5**		5	3.175	16.5	13.2	2.5×1 1.5×2 2.5×2	7330 8570 13300	13500 16200 27000
SFT 1606-2.5 **SFT 1606-3**		6	3.175	16.5	13.2	2.5×1 1.5×2	7330 8570	13500 16200
SFT 2004-2.5 **SFT 2004-5**	20	4	2.381	20.3	17.8	2.5×1 2.5×2	4740 8600	10700 21500
SFT 2005-2.5 **SFT 2005-3** **SFT 2005-5**		5	3.175	20.5	17.2	2.5×1 1.5×2 2.5×2	8230 9620 14900	17100 20600 34300
SFT 2006-2.5 **SFT 2006-3**		6	3.969	20.5	16.4	2.5×1 1.5×2	11000 12800	21100 25300
SFT 2008-2.5 **SFT 2008-3**		8	3.969	20.5	16.4	2.5×1 1.5×2	11000 12800	21100 25300

Axial rigidity K (N/μm)	Ball nut dimensions D	A	G	H	K	B	L	M	W	X	Y	Z	Q	T
90	26	46	—	28	42	10	34	—	36	4.5	8	4.5	M6×1	14
106 126	30	50	—	32	45	10	38 44	—	40	4.5	8	4.5	M6×1	15
106 126	30	50	—	32	45	10	40 48	—	40	4.5	8	4.5	M6×1	15
140 274	34	57	—	34	50	11	40 55	—	45	5.5	9.5	5.5	M6×1	17
134 160	34	57	—	34	50	11	38 45	—	45	5.5	9.5	5.5	M6×1	17
158 188 307	40	63	—	40	55	11	42 52 57	—	51	5.5	9.5	5.5	M6×1	20
158 188	40	63	—	40	55	11	44 56	—	51	5.5	9.5	5.5	M6×1	20
160 309	40	63	24	—	—	11	37 49	3	51	5.5	9.5	5.5	M6×1	—
190 227 370	44	67	26	—	—	11	41 52 56	3	55	5.5	9.5	5.5	M6×1	—
195 232	48	71	27	—	—	11	44 56	3	59	5.5	9.5	5.5	M6×1	—
195 232	48	75	28	—	—	13	54 64	5	61	6.6	11	6.5	M6×1	—

Remarks 1. Flanges for the shaft diameter of 16 mm and smaller are rectangular. There are Circular I and Circular II for those with 20 mm and larger.
Select a flange shape which is suitable for the nut installation space.
2. If there is no seal, the nut length is shorter by the size of "M" than those with a seal.
3. The right turn screw is standard. "L" is added to the end of the model code for the left turn screw.
4. Rigidity in the Table is theoretical value obtained from the elastic deformation between screw groove and ball when the axial load is 30% of the basic dynamic load rating (C_a). Refer to "Technical Description" (Page B521) if axial load differs from the conditions above, or when considering change in the deformation of the ball nut itself.

www.bergab.ru Берг АБ bergab@ya.ru Тел. (495)-228-06-21, факс (495) 223-3071

www.bergab.ru Берг АБ bergab@ya.ru Тел. (495)-228-06-21, факс (495) 223-3071

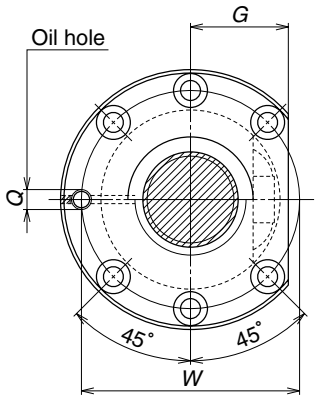

Circular shape II (semi-circular)

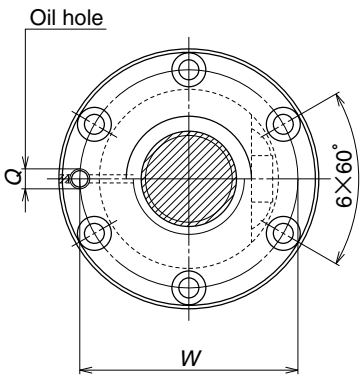

Circular shape I

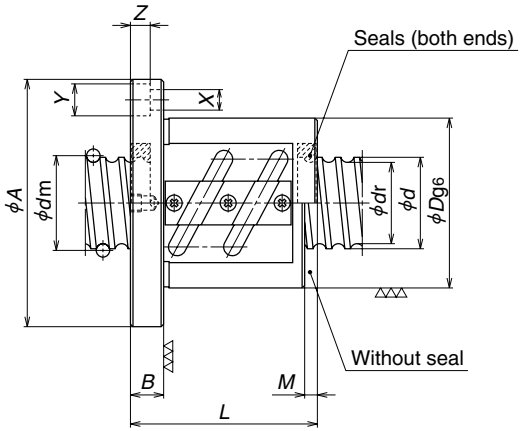

Unit: mm

Model No.	Shaft dia. d	Lead l	Ball dia. D_w	Ball circle dia. d_m	Root dia. d_r	Effective turns of balls Turns × Circuits	Basic load rating (N) Dynamic C_a	Static C_{0a}	Axial rigidity K (N/μm)	Ball nut dimensions D	A	G	B	L	M	W	X	Y	Z	Q
SFT 2504-2.5	25	4	2.381	25.3	22.8	2.5×1	5270	13600	193	46	69	26	11	36	3	57	5.5	9.5	5.5	M6×1
SFT 2504-5						2.5×2	9560	27200	374					48						
SFT 2505-2.5		5	3.175	25.5	22.2	2.5×1	9130	21900	231	50	73	28	11	40	3	61	5.5	9.5	5.5	M6×1
SFT 2505-3						1.5×2	10700	25700	271					52						
SFT 2505-5						2.5×2	16600	43700	447					55						
SFT 2506-2.5		6	3.969	25.5	21.4	2.5×1	12300	26800	235	53	76	29	11	44	3	64	5.5	9.5	5.5	M6×1
SFT 2506-3						1.5×2	14400	32100	280					56						
SFT 2506-5						2.5×2	22300	53500	456					62						
SFT 2508-2.5		8	4.762	25.5	20.5	2.5×1	15800	32000	242	58	85	32	13	56	5	71	6.6	11	6.5	M6×1
SFT 2508-3						1.5×2	18500	38100	286					69						
SFT 2510-2.5		10	4.762	25.5	20.5	2.5×1	15800	32000	242	58	85	32	15	67	8	71	6.6	11	6.5	M6×1
SFT 2510-3						1.5×2	18500	38100	286					81						
SFT 2510-3.5						3.5×1	21100	44200	330					77						
SFT 2805-2.5	28	5	3.175	28.5	25.2	2.5×1	9600	24400	252	55	85	31	12	41	3	69	6.6	11	6.5	M6×1
SFT 2805-5						2.5×2	17400	48800	487					56						
SFT 2806-2.5		6	3.175	28.5	25.2	2.5×1	9600	24400	252	55	85	31	12	45	3	69	6.6	11	6.5	M6×1
SFT 2806-3						1.5×2	11200	29300	300					57						
SFT 2806-5						2.5×2	17400	48800	487					63						
SFT 2810-2.5		10	4.762	28.5	23.5	2.5×1	16700	36100	265	60	94	36	15	68	7	76	9	14	8.5	M6×1
SFT 2810-3						1.5×2	19500	43000	314					82						

Remarks 1. Flange comes in Circular I and Circular II shape. Select a flange that is suitable for the nut installation space.
2. If there is no seal, the nut length is shorter by the length of "M" than those with a seal.
3. The right turn screw is standard. "L" is added to the end of the model code for the left turn screw.
4. Rigidity in the Table is theoretical value obtained from the elastic deformation between screw groove and ball when the axial load is 30% of the basic dynamic load rating (C_a). Refer to "Technical Description" (Page B521) if axial load differs from the conditions above, or when considering change in the deformation of the ball nut itself.

www.bergab.ru Берг АБ bergab@ya.ru Тел. (495)-228-06-21, факс (495) 223-3071

www.bergab.ru Берг АБ bergab@ya.ru Тел. (495)-228-06-21, факс (495) 223-3071

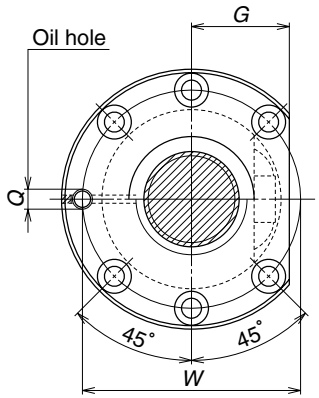

Circular shape II (semi-circular)

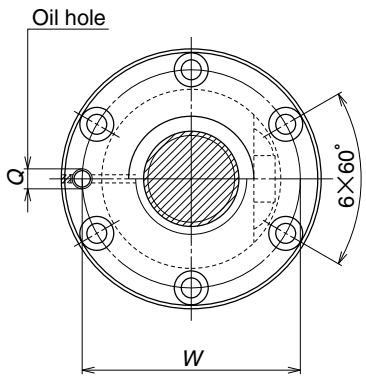

Circular shape I

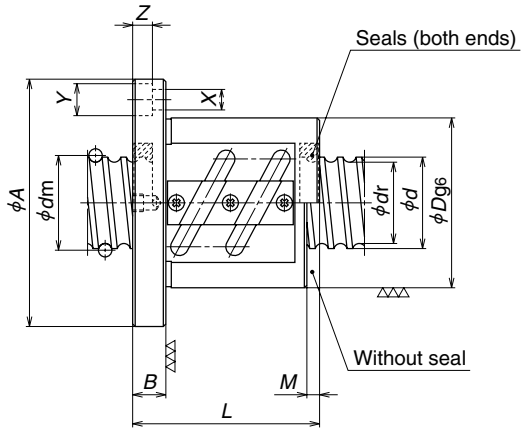

Unit: mm

Model No.	Shaft dia. d	Lead l	Ball dia. D_w	Ball circle dia. d_m	Root dia. d_r	Effective turns of balls Turns × Circuits	Basic load rating (N) Dynamic C_a	Static C_{0a}	Axial rigidity K (N/μm)	Ball nut dimensions D	A	G	B	L	M	W	X	Y	Z	Q
SFT 3204-2.5	32	4	2.381	32.3	29.8	2.5×1	5800	17500	234	54	81	31	12	37	3	67	6.6	11	6.5	M6×1
SFT 3204-5						2.5×2	10500	35100	454					49						
SFT 3205-2.5		5	3.175	32.5	29.2	2.5×1	10200	28000	281	58	85	32	12	41	3	71	6.6	11	6.5	M6×1
SFT 3205-3						1.5×2	11900	33600	333					53						
SFT 3205-5						2.5×2	18500	56100	543					56						
SFT 3205-7.5						2.5×3	26200	84100	799					71						
SFT 3206-2.5		6	3.969	32.5	28.4	2.5×1	13600	34700	287	62	89	34	12	45	3	75	6.6	11	6.5	M6×1
SFT 3206-3						1.5×2	15900	41200	339					57						
SFT 3206-5						2.5×2	24700	69400	555					63						
SFT 3208-2.5		8	4.762	32.5	27.5	2.5×1	17500	41000	292	66	100	38	15	58	5	82	9	14	8.5	M6×1
SFT 3208-3						1.5×2	20400	49500	349					71						
SFT 3208-5						2.5×2	31700	82000	565					82						
SFT 3210-2.5		10	6.35	33	26.4	2.5×1	25500	54000	302	74	108	41	15	70	7	90	9	14	8.5	M6×1
SFT 3210-3						1.5×2	29900	64800	360					87						
SFT 3210-3.5						3.5×1	34100	77000	422					80						
SFT 3210-5						2.5×2	46300	108000	585					100						
SFT 3212-2.5		12	6.35	33	26.4	2.5×1	25500	54000	302	74	108	41	18	81	9	90	9	14	8.5	M6×1
SFT 3212-3						1.5×2	29900	64800	360					97						
SFT 3605-5	36	5	3.175	36.5	33.2	2.5×2	19400	63300	597	65	100	38	15	59	3	82	9	14	8.5	M6×1
SFT 3605-7.5						2.5×3	27500	95000	878					74						
SFT 3606-5		6	3.969	36.5	32.4	2.5×2	26500	78500	615	65	100	38	15	66	3	82	9	14	8.5	M6×1
SFT 3606-7.5						2.5×3	37600	118000	905					84						
SFT 3610-2.5		10	6.35	37.0	30.4	2.5×1	27200	61300	334	75	120	45	18	73	7	98	11	17.5	11	M6×1
SFT 3610-3						1.5×2	31800	73500	397					90						
SFT 3610-5						2.5×2	49300	123000	647					103						

Remarks 1. Flange comes in Circular I and Circular II shape. Select a flange that is suitable for the nut installation space.
2. If there is no seal, the nut length is shorter by the length of "M" than those with a seal.
3. The right turn screw is standard. "L" is added to the end of the model code for the left turn screw.
4. Rigidity in the Table is theoretical value obtained from the elastic deformation between screw groove and ball when the axial load is 30% of the basic dynamic load rating (C_a). Refer to "Technical Description" (Page B521) if axial load differs from the conditions above, or when considering change in the deformation of the ball nut itself.

www.bergab.ru Берг АБ bergab@ya.ru Тел. (495)-228-06-21, факс (495) 223-3071

www.bergab.ru Берг АБ bergab@ya.ru Тел. (495)-228-06-21, факс (495) 223-3071

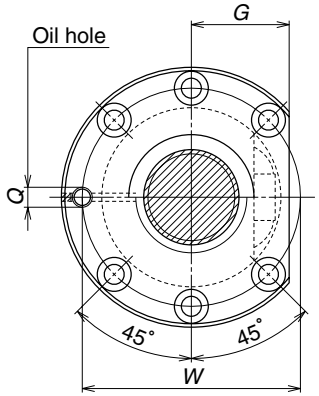

Circular shape II (semi-circular)

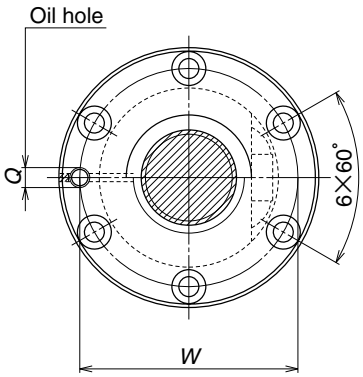

Circular shape I

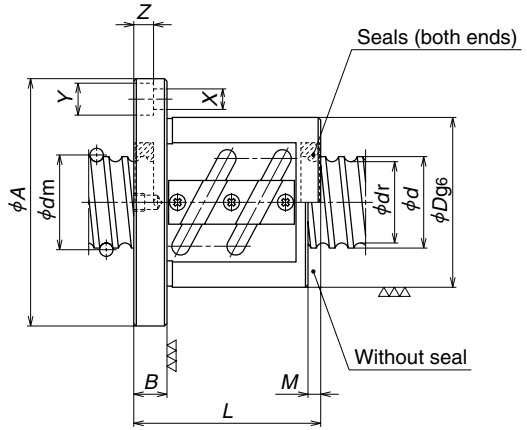

Unit: mm

Model No.	Shaft dia. d	Lead l	Ball dia. D_w	Ball circle dia. d_m	Root dia. d_r	Effective turns of balls Turns × Circuits	Basic load rating (N) Dynamic C_a	Static C_{0a}	Axial rigidity K (N/μm)	Ball nut dimensions D	A	G	B	L	M	W	X	Y	Z	Q
SFT 4005-2.5	40	5	3.175	40.5	37.2	2.5×1	11100	35300	336	67	101	39	15	44	3	83	9	14	8.5	Rc1/8
SFT 4005-3						1.5×2	13000	42400	399					56						
SFT 4005-5						2.5×2	20200	70600	649					59						
SFT 4005-7.5						2.5×3	28700	106000	956					74						
SFT 4006-3		6	3.969	40.5	36.4	1.5×2	17800	52600	411	70	104	40	15	60	3	86	9	14	8.5	Rc1/8
SFT 4006-5						2.5×2	27600	87600	668					66						
SFT 4006-7.5						2.5×3	39100	131000	984					84						
SFT 4008-2.5		8	4.762	40.5	35.5	2.5×1	19200	51600	349	74	108	41	15	58	5	90	9	14	8.5	Rc1/8
SFT 4008-3						1.5×2	22500	62600	418					71						
SFT 4008-5						2.5×2	34900	103000	675					82						
SFT 4010-2.5		10	6.35	41.0	34.4	2.5×1	28600	68600	365	82	124	47	18	73	7	102	11	17.5	11	Rc1/8
SFT 4010-3						1.5×2	33500	82300	434					90						
SFT 4010-3.5						3.5×1	38300	96000	503					83						
SFT 4010-5						2.5×2	52000	137000	706					103						
SFT 4012-2.5		12	7.144	41.5	34.1	2.5×1	33600	77500	373	86	128	48	18	81	9	106	11	17.5	11	Rc1/8
SFT 4012-5						2.5×2	61000	155000	722					117						
SFT 4016-2.5		16	7.144	41.5	34.1	2.5×1	33600	77500	373	86	128	48	22	102	14	106	11	17.5	11	Rc1/8
SFT 4016-3						1.5×2	39300	93100	440					118						
SFT 4510-5	45	10	6.35	46.0	39.4	2.5×2	54200	155000	772	88	132	50	18	103	7	110	11	17.5	11	Rc1/8
SFT 4510-7.5						2.5×3	76800	232000	1140					133						
SFT 4512-2.5		12	7.144	46.5	39.1	2.5×1	35400	88500	412	90	132	50	18	83	8	110	11	17.5	11	Rc1/8
SFT 4512-5						2.5×2	64200	177000	798					119						

Remarks 1. Flange comes in Circular I and Circular II shape. Select a flange that is suitable for the nut installation space.
2. If there is no seal, the nut length is shorter by the length of "M" than those with a seal.
3. The right turn screw is standard. "L" is added to the end of the model code for the left turn screw.
4. Rigidity in the Table is theoretical value obtained from the elastic deformation between screw groove and ball when the axial load is 30% of the basic dynamic load rating (C_a). Refer to "Technical Description" (Page B521) if axial load differs from the conditions above, or when considering change in the deformation of the ball nut itself.

www.bergab.ru Берг АБ bergab@ya.ru Тел. (495)-228-06-21, факс (495) 223-3071

www.bergab.ru Берг АБ bergab@ya.ru Тел. (495)-228-06-21, факс (495) 223-3071

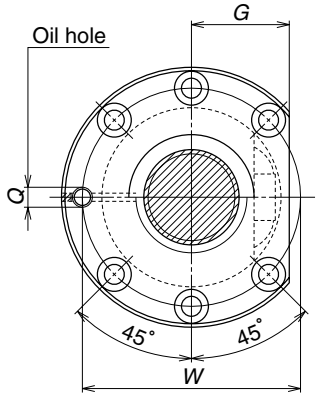

Circular shape II (semi-circular)

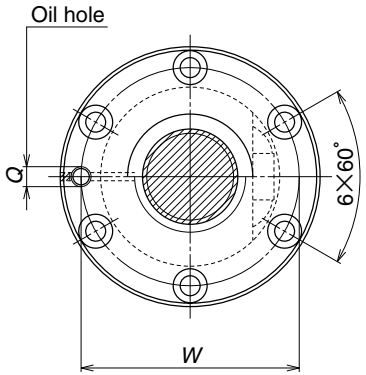

Circular shape I

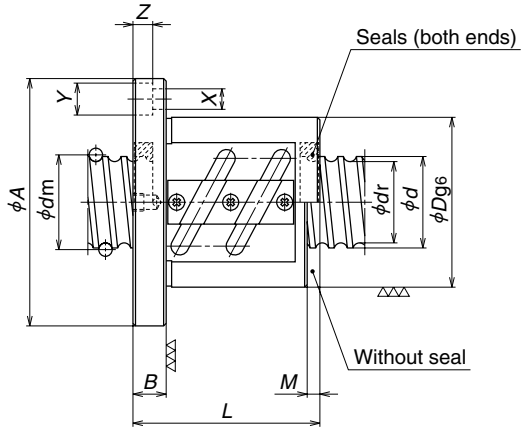

Unit: mm

Model No.	Shaft dia. d	Lead l	Ball dia. D_w	Ball circle dia. d_m	Root dia. d_r	Effective turns of balls Turns × Circuits	Basic load rating (N) Dynamic C_a	Static C_{0a}	Axial rigidity K (N/μm)	Ball nut dimensions D	A	G	B	L	M	W	X	Y	Z	Q
SFT 5005-3 **SFT 5005-4.5**	50	5	3.175	50.5	47.2	1.5×2 1.5×3	14200 20200	52500 78800	472 696	80	114	43	15	58 68	3	96	9	14	8.5	Rc1/8
SFT 5006-3 **SFT 5006-5** **SFT 5006-7.5**		6	3.969	50.5	46.4	1.5×2 2.5×2 2.5×3	19500 30300 42900	65100 109000 164000	486 794 1170	84	118	45	15	62 68 86	3	100	9	14	8.5	Rc1/8
SFT 5008-3 **SFT 5008-5** **SFT 5008-7.5**		8	4.762	50.5	45.5	1.5×2 2.5×2 2.5×3	25000 38700 54900	77400 131000 197000	496 815 1200	87	129	49	18	74 85 109	5	107	11	17.5	11	Rc1/8
SFT 5010-2.5 **SFT 5010-3** **SFT 5010-5** **SFT 5010-7.5**		10	6.35	51	44.4	2.5×1 1.5×2 2.5×2 2.5×3	31800 37200 57700 81800	87400 103000 175000 262000	440 517 853 1250	93	135	51	18	73 90 103 133	7	113	11	17.5	11	Rc1/8
SFT 5012-2.5 **SFT 5012-5**		12	7.938	51.5	43.2	2.5×1 2.5×2	42800 77600	107000 214000	449 869	100	146	55	22	87 123	8	122	14	20	13	Rc1/8
SFT 5016-2.5 **SFT 5016-5**		16	7.938	51.5	43.2	2.5×1 2.5×2	42800 77600	107000 214000	449 869	100	146	55	22	104 152	14	122	14	20	13	Rc1/8
SFT 5020-2.5 **SFT 5020-3**		20	7.938	51.5	43.2	2.5×1 1.5×2	42800 50000	107000 129000	449 534	100	146	55	28	127 147	17	122	14	20	13	Rc1/8
SFT 5510-5 **SFT 5510-7.5**	55	10	6.35	56.0	49.4	2.5×2 2.5×3	59500 84300	192000 288000	916 1350	102	144	54	18	103 133	7	122	11	17.5	11	Rc1/8

Remarks 1. Flange comes in Circular I and Circular II shape. Select a flange that is suitable for the nut installation space.
2. If there is no seal, the nut length is shorter by the length of "M" than those with a seal.
3. The right turn screw is standard. "L" is added to the end of the model code for the left turn screw.
4. Rigidity in the Table is theoretical value obtained from the elastic deformation between screw groove and ball when the axial load is 30% of the basic dynamic load rating (C_a). Refer to "Technical Description" (Page B521) if axial load differs from the conditions above, or when considering change in the deformation of the ball nut itself.

www.bergab.ru Берг АБ bergab@ya.ru Тел. (495)-228-06-21, факс (495) 223-3071

www.bergab.ru Берг АБ bergab@ya.ru Тел. (495)-228-06-21, факс (495) 223-3071

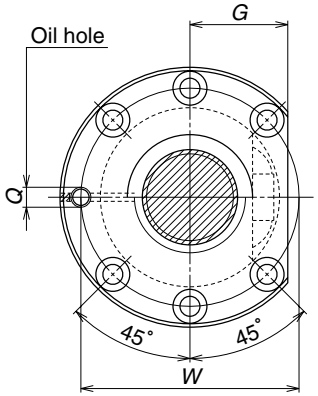

Circular shape II (semi-circular)

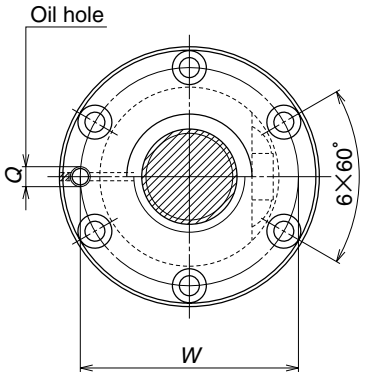

Circular shape I

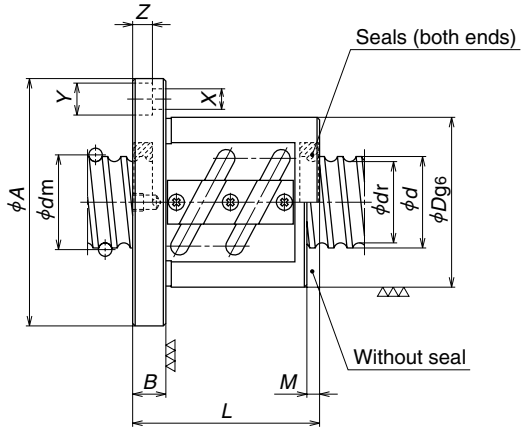

Unit: mm

Model No.	Shaft dia. d	Lead l	Ball dia. D_w	Ball circle dia. d_m	Root dia. d_r	Effective turns of balls Turns × Circuits	Basic load rating (N) Dynamic C_a	Basic load rating (N) Static C_{0a}
SFT 6310-2.5	63	10	6.35	64.0	57.4	2.5×1	34800	111000
SFT 6310-5						2.5×2	63200	221000
SFT 6310-7.5						2.5×3	89500	332000
SFT 6312-2.5		12	7.938	64.5	56.2	2.5×1	47400	137000
SFT 6312-5						2.5×2	86000	273000
SFT 6316-2.5		16	9.525	65.0	55.2	2.5×1	79500	228000
SFT 6316-5						2.5×2	144000	455000
SFT 6320-2.5		20	9.525	65.0	55.2	2.5×1	79500	228000
SFT 6320-5						2.5×2	144000	455000
SFT 8010-5	80	10	6.35	81.0	74.4	2.5×2	70500	282000
SFT 8010-7.5						2.5×3	99800	424000
SFT 8012-5		12	7.938	81.5	73.2	2.5×2	96000	350000
SFT 8012-7.5						2.5×3	136000	526000
SFT 8016-5		16	9.525	82.0	72.2	2.5×2	162000	582000
SFT 8016-7.5						2.5×3	230000	874000
SFT 8020-5		20	9.525	82.0	72.2	2.5×2	162000	582000
SFT 8020-7.5						2.5×3	230000	874000
SFT 10012-5	100	12	7.938	101.5	93.2	2.5×2	105000	441000
SFT 10012-7.5						2.5×3	149000	662000
SFT 10016-5		16	9.525	102	92.2	2.5×2	176000	737000
SFT 10016-7.5						2.5×3	250000	1100000
SFT 10020-5		20	9.525	102	92.2	2.5×2	176000	737000
SFT 10020-7.5						2.5×3	250000	1100000
SFT 12516-5	125	16	9.525	127	117.2	2.5×2	195000	918000
SFT 12516-7.5						2.5×3	277000	1380000
SFT 12520-5		20	9.525	127	117.2	2.5×2	195000	918000
SFT 12520-7.5						2.5×3	277000	1380000

Axial rigidity K (N/μm)	Ball nut dimensions D	A	G	B	L	M	W	X	Y	Z	Q
528	108	154	58	22	77	7	130	14	20	13	Rc1/8
1020					107						
1500					137						
542	115	161	61	22	87	8	137	14	20	13	Rc1/8
1050					123						
713	122	180	69	28	110	10	150	18	26	17.5	Rc1/8
1380					158						
713	122	180	69	28	127	17	150	18	26	17.5	Rc1/8
1380					187						
1240	130	176	66	22	107	7	152	14	20	13	Rc1/8
1830					137						
1280	136	182	68	22	123	8	158	14	20	13	Rc1/8
1880					159						
1680	143	204	77	28	158	10	172	18	26	17.5	Rc1/8
2470					206						
1680	143	204	77	28	187	17	172	18	26	17.5	Rc1/8
2470					247						
1530	160	220	82	28	129	8	188	18	26	17.5	Rc1/8
2250					165						
2010	170	243	91	32	162	10	205	22	32	21.5	Rc1/8
2950					210						
2010	170	243	91	32	191	17	205	22	32	21.5	Rc1/8
2950					251						
2390	200	290	109	36	170	10	243	26	39	25.5	Rc1/8
3520					218						
2390	200	290	109	36	199	12	243	26	39	25.5	Rc1/8
3520					259						

Remarks 1. Flange comes in Circular I and Circular II shape. Select a flange that is suitable for the nut installation space.
2. If there is no seal, the nut length is shorter by the length of "M" than those with a seal.
3. The right turn screw is standard. "L" is added to the end of the model code for the left turn screw.
4. Rigidity in the Table is theoretical value obtained from the elastic deformation between screw groove and ball when the axial load is 30% of the basic dynamic load rating (C_a). Refer to "Technical Description" (Page B521) if axial load differs from the conditions above, or when considering change in the deformation of the ball nut itself.

www.bergab.ru Берг АБ bergab@ya.ru Тел. (495)-228-06-21, факс (495) 223-3071

www.bergab.ru Берг АБ bergab@ya.ru Тел. (495)-228-06-21, факс (495) 223-3071

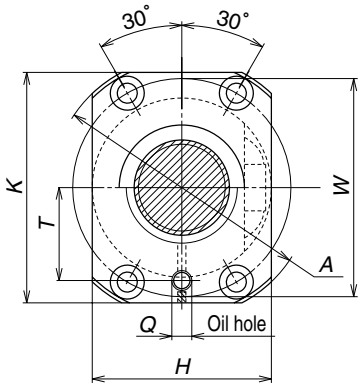

Rectangular shape
Screw shaft dia. $d \leqq 16$mm

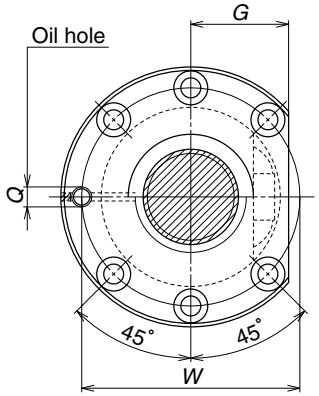

Circular shape II (semi-circular)

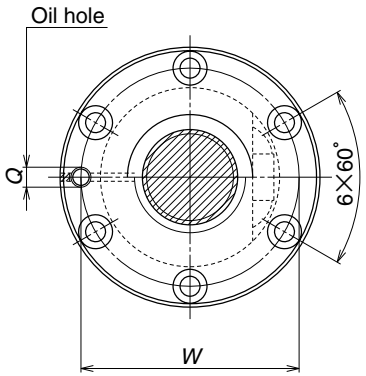

Circular shape I

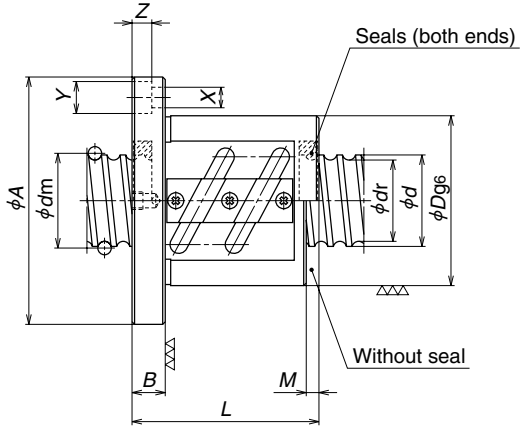

Unit: mm

Model No.	Shaft dia. d	Lead l	Ball dia. D_w	Ball circle dia. d_m	Root dia. d_r	Effective turns of balls Turns × Circuits	Basic load rating (N) Dynamic C_a	Static C_{0a}	Axial rigidity K (N/μm)	Ball nut dimensions D	A	G	H	K	B	L	M	W	X	Y	Z	Q	T
PFT 1004-2.5	10	4	2.000	10.3	8.2	2.5×1	1730	2230	76	26	46	—	28	42	10	34	—	36	4.5	8	4.5	M6×1	14
PFT 1204-2.5 **PFT 1204-3**	12	4	2.381	12.3	9.8	2.5×1 1.5×2	2370 2770	3160 3790	89 106	30	50	—	32	45	10	38 44	—	40	4.5	8	4.5	M6×1	15
PFT 1205-2.5 **PFT 1205-3**		5	2.381	12.3	9.8	2.5×1 1.5×2	2370 2770	3160 3790	89 106	30	50	—	32	45	10	40 48	—	40	4.5	8	4.5	M6×1	15
PFT 1405-2.5 **PFT 1405-5**	14	5	3.175	14.5	11.2	2.5×1 2.5×2	4280 7770	5840 11700	116 225	34	57	—	34	50	11	40 55	—	45	5.5	9.5	5.5	M6×1	17
PFT 1604-3 **PFT 1604-5**	16	4	2.381	16.3	13.8	1.5×2 2.5×2	3170 4920	5150 8530	135 215	34	57	—	34	50	11	45 50	—	45	5.5	9.5	5.5	M6×1	17
PFT 1605-3 **PFT 1605-5**		5	3.175	16.5	13.2	1.5×2 2.5×2	5400 8380	8100 13500	158 258	40	63	—	40	55	11	52 57	—	51	5.5	9.5	5.5	M6×1	20
PFT 1606-2.5		6	3.175	16.5	13.2	2.5×1	4620	6750	133	40	63	—	40	55	11	44	—	51	5.5	9.5	5.5	M6×1	20
PFT 2004-5	20	4	2.381	20.3	17.8	2.5×2	5420	10700	260	40	63	24	—	—	11	49	3	51	5.5	9.5	5.5	M6×1	—
PFT 2005-3 **PFT 2005-5**		5	3.175	20.5	17.2	1.5×2 2.5×2	6060 9410	10300 17100	191 311	44	67	26	—	—	11	52 56	3	55	5.5	9.5	5.5	M6×1	—
PFT 2006-2.5 **PFT 2006-3**		6	3.969	20.5	16.4	2.5×1 1.5×2	6900 8080	10500 12700	164 195	48	71	27	—	—	11	44 56	3	59	5.5	9.5	5.5	M6×1	—
PFT 2008-2.5		8	3.969	20.5	16.4	2.5×1	6900	10500	164	48	75	28	—	—	13	54	5	61	6.6	11	6.5	M6×1	—
PFT 2504-5	25	4	2.381	25.3	22.8	2.5×2	6020	13600	312	46	69	26	—	—	11	48	3	57	5.5	9.5	5.5	M6×1	—
PFT 2505-3 **PFT 2505-5**		5	3.175	25.5	22.2	1.5×2 2.5×2	6730 10400	12800 21900	223 372	50	73	28	—	—	11	52 55	3	61	5.5	9.5	5.5	M6×1	—
PFT 2506-3 **PFT 2506-5**		6	3.969	25.5	21.4	1.5×2 2.5×2	9070 14100	16100 26800	235 383	53	76	29	—	—	11	56 62	3	64	5.5	9.5	5.5	M6×1	—

Remarks
1. Flanges for shaft diameter of 16 mm and smaller are rectangle. There are Circular I and Circular II for those with 20 mm and larger. Select a flange shape which is suitable for the nut installation space.
2. If there is no seal, the nut length is shorter by the length of "M" than those with a seal.
3. Right turn screw is standard. "L" is added to the end of the model code for left turn screw.
4. Load balls and spacer balls are installed at a ratio of 1:1. Therefore, the basic load rating differs from those of other models.
5. Rigidity in the Table is theoretical value obtained from the elastic deformation between screw groove and ball when the preload is 5% of the basic dynamic load rating (C_a), and the axial load is applied to it. Refer to "Technical description" (Page B521) if preload differs from the conditions above, or when considering change in the deformation of the ball nut itself.

www.bergab.ru Берг АБ bergab@ya.ru Тел. (495)-228-06-21, факс (495) 223-3071

www.bergab.ru Берг АБ bergab@ya.ru Тел. (495)-228-06-21, факс (495) 223-3071

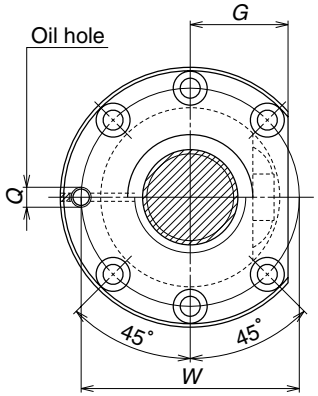

Circular shape II (semi-circular)

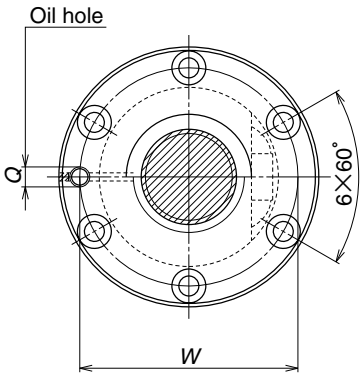

Circular shape I

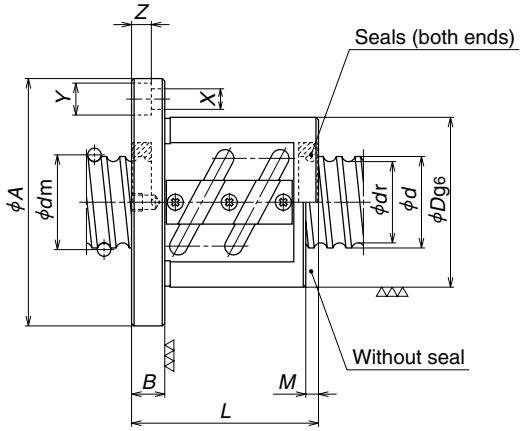

Unit: mm

Model No.	Shaft dia. d	Lead l	Ball dia. D_w	Ball circle dia. d_m	Root dia. d_r	Effective turns of balls Turns × Circuits	Basic load rating (N) Dynamic C_a	Static C_{0a}	Axial rigidity K (N/μm)	Ball nut dimensions D	A	G	B	L	M	W	X	Y	Z	Q
PFT 2508-2.5 **PFT 2508-3**	25	8	4.762	25.5	20.5	2.5×1 1.5×2	9940 11600	16000 19000	203 234	58	85	32	13	56 69	5	71	6.6	11	6.5	M6×1
PFT 2510-2.5 **PFT 2510-3**		10	4.762	25.5	20.5	2.5×1 1.5×2	9940 11600	16000 19000	203 234	58	85	32	15	67 81	8	71	6.6	11	6.5	M6×1
PFT 2805-5	28	5	3.175	28.5	25.2	2.5×2	11000	24400	410	55	85	31	12	56	3	69	6.6	11	6.5	M6×1
PFT 2806-3 **PFT 2806-5**		6	3.175	28.5	25.2	1.5×2 2.5×2	7080 11000	14600 24400	252 410	55	85	31	12	57 63	3	69	6.6	11	6.5	M6×1
PFT 2810-2.5 **PFT 2810-3**		10	4.762	28.5	23.5	2.5×1 1.5×2	10500 12300	18000 21500	220 265	60	94	36	15	68 82	7	76	9	14	8.5	M6×1
PFT 3204-5	32	4	2.381	32.3	29.8	2.5×2	6630	17500	382	54	81	31	12	49	3	67	6.6	11	6.5	M6×1
PFT 3205-3 **PFT 3205-5** **PFT 3205-7.5**		5	3.175	32.5	29.2	1.5×2 2.5×2 2.5×3	7490 11600 16500	16800 28000 42100	281 455 672	58	85	32	12	53 56 71	3	71	6.6	11	6.5	M6×1
PFT 3206-3 **PFT 3206-5**		6	3.969	32.5	28.4	1.5×2 2.5×2	10000 15500	20600 34700	285 468	62	89	34	12	57 63	3	75	6.6	11	6.5	M6×1
PFT 3208-3 **PFT 3208-5**		8	4.762	32.5	27.5	1.5×2 2.5×2	12900 20000	24800 41000	294 470	66	100	38	15	71 82	5	82	9	14	8.5	M6×1
PFT 3210-2.5 **PFT 3210-3** **PFT 3210-5**		10	6.35	33.0	26.4	2.5×1 1.5×2 2.5×2	16100 18800 29200	27000 32400 54000	255 303 494	74	108	41	15	70 87 100	7	90	9	14	8.5	M6×1
PFT 3212-2.5 **PFT 3212-3**		12	6.35	33.0	26.4	2.5×1 1.5×2	16100 18800	27000 32400	255 303	74	108	41	18	81 97	9	90	9	14	8.5	M6×1

Remarks 1. Flange comes in Circular I and Circular II shape. Select a flange that is suitable for the nut installation space.
2. If there is no seal, the nut length is shorter by the length of "M" than those with a seal.
3. The right turn screw is standard. "L" is added to the end of the model code for the left turn screw.
4. Load balls and spacer balls are installed at a ratio of 1:1. Therefore, the basic load rating differs from those of other models.
5. Rigidity in the Table is theoretical value obtained from the elastic deformation between screw groove and ball when the preload is 5% of the basic dynamic load rating (C_a), and the axial load is applied to it. Refer to "Technical description" (Page B521) if preload differs from the conditions above, or when considering change in the deformation of the ball nut itself.

www.bergab.ru Берг АБ bergab@ya.ru Тел. (495)-228-06-21, факс (495) 223-3071

www.bergab.ru Берг АБ bergab@ya.ru Тел. (495)-228-06-21, факс (495) 223-3071

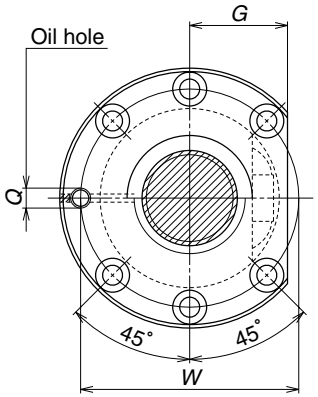

Circular shape II (semi-circular)

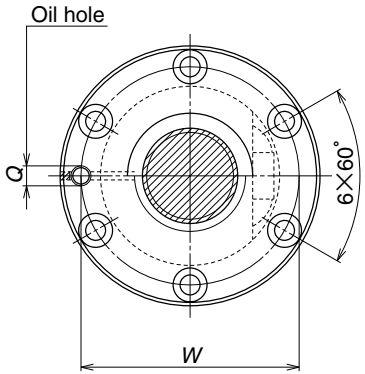

Circular shape I

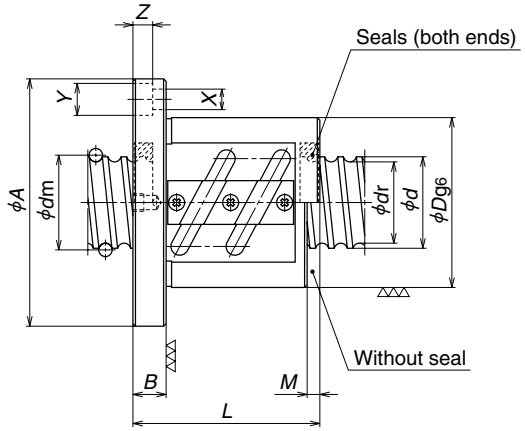

Unit: mm

Model No.	Shaft dia. d	Lead l	Ball dia. D_w	Ball circle dia. d_m	Root dia. d_r	Effective turns of balls Turns × Circuits	Basic load rating (N) Dynamic C_a	Static C_{0a}	Axial rigidity K (N/μm)	Ball nut dimensions D	A	G	B	L	M	W	X	Y	Z	Q
PFT 3605-5	36	5	3.175	36.5	33.2	2.5×2	12200	31700	504	65	100	38	15	59	3	82	9	14	8.5	M6×1
PFT 3605-7.5						2.5×3	17300	47500	740					74						
PFT 3606-5		6	3.969	36.5	32.4	2.5×2	16700	39300	518	65	100	38	15	66	3	82	9	14	8.5	M6×1
PFT 3606-7.5						2.5×3	23700	58900	763					84						
PFT 3610-2.5		10	6.35	37.0	30.4	2.5×1	17100	30600	278	75	120	45	18	73	7	98	11	17.5	11	M6×1
PFT 3610-3						1.5×2	20000	36800	327					90						
PFT 3610-5						2.5×2	31100	61300	537					103						
PFT 4005-3	40	5	3.175	40.5	37.2	1.5×2	8210	21200	337	67	101	39	15	56	3	83	9	14	8.5	Rc1/8
PFT 4005-5						2.5×2	12700	35300	548					59						
PFT 4005-7.5						2.5×3	18100	53000	806					74						
PFT 4006-5		6	3.969	40.5	36.4	2.5×2	17400	43800	564	70	104	40	15	66	3	86	9	14	8.5	Rc1/8
PFT 4006-7.5						2.5×3	24600	65700	827					84						
PFT 4008-3		8	4.762	40.5	35.5	1.5×2	14200	31300	352	74	108	41	15	71	5	90	9	14	8.5	Rc1/8
PFT 4008-5						2.5×2	22000	51600	570					82						
PFT 4010-2.5		10	6.35	41.0	34.4	2.5×1	18000	34300	307	82	124	47	18	73	7	102	11	17.5	11	Rc1/8
PFT 4010-3						1.5×2	21100	41100	366					90						
PFT 4010-5						2.5×2	32800	68600	595					103						
PFT 4012-2.5		12	7.144	41.5	34.1	2.5×1	21200	38800	310	86	128	48	18	81	9	106	11	17.5	11	Rc1/8
PFT 4012-5						2.5×2	38400	77500	600					117						

Remarks 1. Flange comes in Circular I and Circular II shape. Select a flange that is suitable for the nut installation space.
2. If there is no seal, the nut length is shorter by the length of "M" than those with a seal.
3. The right turn screw is standard. "L" is added to the end of the model code for the left turn screw.
4. Load balls and spacer balls are installed at a ratio of 1:1. Therefore, the basic load rating differs from those of other models.
5. Rigidity in the Table is theoretical value obtained from the elastic deformation between screw groove and ball when the preload is 5% of the basic dynamic load rating (C_a), and the axial load is applied to it. Refer to "Technical description" (Page B521) if preload differs from the conditions above, or when considering change in the deformation of the ball nut itself.

www.bergab.ru Берг АБ bergab@ya.ru Тел. (495)-228-06-21, факс (495) 223-3071

www.bergab.ru Берг АБ bergab@ya.ru Тел. (495)-228-06-21, факс (495) 223-3071

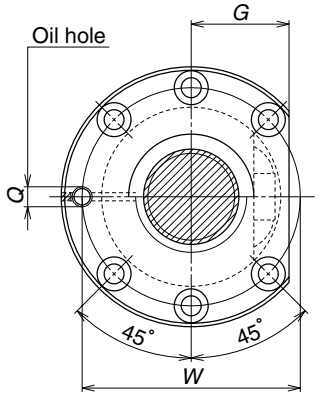

Circular shape II (semi-circular)

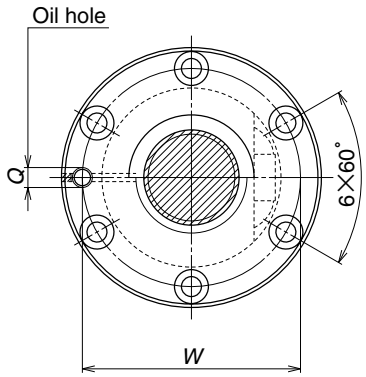

Circular shape I

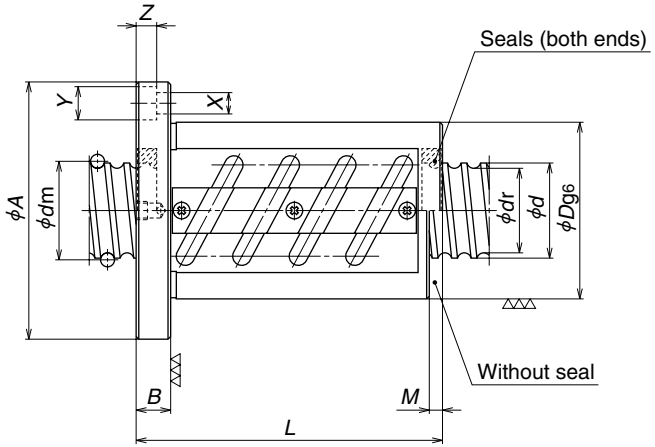

Unit: mm

Model No.	Shaft dia. d	Lead l	Ball dia. D_w	Ball circle dia. d_m	Root dia. d_r	Effective turns of balls Turns × Circuits	Basic load rating (N) Dynamic C_a	Static C_{0a}	Axial rigidity K (N/μm)	Ball nut dimensions D	A	G	B	L	M	W	X	Y	Z	Q
ZFT 2504-5 **ZFT 2504-10**	25	4	2.381	25.3	22.8	2.5×1 2.5×2	5270 9560	13600 27200	379 735	46	69	26	11	48 72	3	57	5.5	9.5	5.5	M6×1
ZFT 2505-5 **ZFT 2505-10**		5	3.175	25.5	22.2	2.5×1 2.5×2	9130 16600	21900 43700	454 876	50	73	28	11	55 85	3	61	5.5	9.5	5.5	M6×1
ZFT 2506-5 **ZFT 2506-10**		6	3.969	25.5	21.4	2.5×1 2.5×2	12300 22300	26800 53500	462 896	53	76	29	11	62 98	3	64	5.5	9.5	5.5	M6×1
ZFT 2508-5		8	4.762	25.5	20.5	2.5×1	15800	32000	476	58	85	32	13	80	5	71	6.6	11	6.5	M6×1
ZFT 2510-3		10	4.762	25.5	20.5	1.5×1	10200	19000	291	58	85	32	15	81	8	71	6.6	11	6.5	M6×1
ZFT 2805-5 **ZFT 2805-10**	28	5	3.175	28.5	25.2	2.5×1 2.5×2	9600 17400	24400 48800	495 959	55	85	31	12	56 86	3	69	6.6	11	6.5	M6×1
ZFT 2806-5 **ZFT 2806-10**		6	3.175	28.5	25.2	2.5×1 2.5×2	9600 17400	24400 48800	495 959	55	85	31	12	63 99	3	69	6.6	11	6.5	M6×1
ZFT 2810-3		10	4.762	28.5	23.5	1.5×1	10800	21500	320	60	94	36	15	82	7	76	9	14	8.5	M6×1
ZFT 3204-5 **ZFT 3204-10**	32	4	2.381	32.3	29.8	2.5×1 2.5×2	5800 10500	17500 35100	461 892	54	81	31	12	49 73	3	67	6.6	11	6.5	M6×1
ZFT 3205-5 **ZFT 3205-10**		5	3.175	32.5	29.2	2.5×1 2.5×2	10200 18500	28000 56100	552 1070	58	85	32	12	56 86	3	71	6.6	11	6.5	M6×1
ZFT 3206-5 **ZFT 3206-10**		6	3.969	32.5	28.4	2.5×1 2.5×2	13600 24700	34700 69400	563 1090	62	89	34	12	63 99	3	75	6.6	11	6.5	M6×1
ZFT 3208-5 **ZFT 3208-6**		8	4.762	32.5	27.5	2.5×1 1.5×2	17500 20400	41000 49500	573 686	66	100	38	15	82 111	5	82	9	14	8.5	M6×1
ZFT 3210-3 **ZFT 3210-5**		10	6.35	33.0	26.4	1.5×1 2.5×1	16400 25500	32400 54000	365 594	74	108	41	15	87 100	7	90	9	14	8.5	M6×1
ZFT 3212-3		12	6.35	33.0	26.4	1.5×1	16400	32400	365	74	108	41	18	97	9	90	9	14	8.5	M6×1

Remarks 1. Flange comes in Circular I and Circular II shape. Select a flange that is suitable for the nut installation space.
2. If there is no seal, the nut length is shorter by the length of "M" than those with a seal.
3. The right turn screw is standard. "L" is added to the end of the model code for the left turn screw.
4. Rigidity in the Table is theoretical value obtained from the elastic deformation between screw groove and ball when the preload is 10% of the basic dynamic load rating (C_a), and axial load is applied to it. Refer to "Technical Description" (Page B521) if preload differs from the conditions above, or when considering change in the deformation of the ball nut itself.

www.bergab.ru Берг АБ bergab@ya.ru Тел. (495)-228-06-21, факс (495) 223-3071

www.bergab.ru Берг АБ bergab@ya.ru Тел. (495)-228-06-21, факс (495) 223-3071

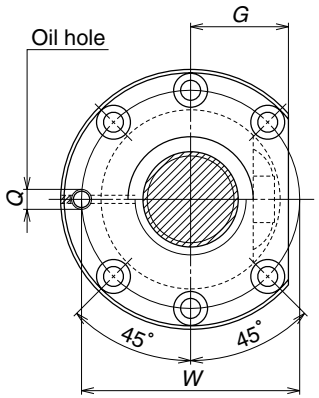

Circular shape II (semi-circular)

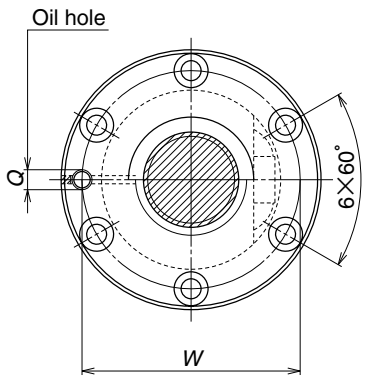

Circular shape I

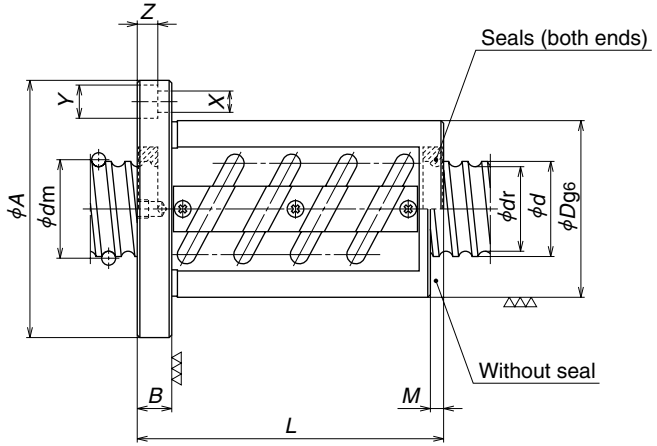

Unit: mm

Model No.	Shaft dia. d	Lead l	Ball dia. D_w	Ball circle dia. d_m	Root dia. d_r	Effective turns of balls: Turns × Circuits	Basic load rating (N) Dynamic C_a	Basic load rating (N) Static C_{0a}	Axial rigidity K (N/μm)	Ball nut dimensions D	A	G	B	L	M	W	X	Y	Z	Q
ZFT 3605-5	36	5	3.175	36.5	33.2	2.5×1	10700	31700	607	65	100	38	15	59	3	82	9	14	8.5	M6×1
ZFT 3605-10						2.5×2	19400	63300	1170					89						
ZFT 3606-5		6	3.969	36.5	32.4	2.5×1	14600	39300	625	65	100	38	15	66	3	82	9	14	8.5	M6×1
ZFT 3606-10						2.5×2	26500	78500	1210					102						
ZFT 3610-3		10	6.35	37.0	30.4	1.5×1	17500	36800	404	75	120	45	18	90	7	98	11	17.5	11	M6×1
ZFT 3610-5						2.5×1	27200	61300	657					103						
ZFT 4005-5	40	5	3.175	40.5	37.2	2.5×1	11100	35300	661	67	101	39	15	59	3	83	9	14	8.5	Rc1/8
ZFT 4005-10						2.5×2	20200	70600	1280					89						
ZFT 4006-5		6	3.969	40.5	36.4	2.5×1	15200	43800	679	70	104	40	15	66	3	86	9	14	8.5	Rc1/8
ZFT 4006-10						2.5×2	27600	87600	1320					102						
ZFT 4008-5		8	4.762	40.5	35.5	2.5×1	19200	51600	687	74	108	41	15	82	5	90	9	14	8.5	Rc1/8
ZFT 4008-10						2.5×2	34900	103000	1330					130						
ZFT 4010-5		10	6.35	41.0	34.4	2.5×1	28600	68600	717	82	124	47	18	103	7	102	11	17.5	11	Rc1/8
ZFT 4010-6						1.5×2	33500	82300	854					140						
ZFT 4010-7						3.5×1	38300	96000	988					123						
ZFT 4012-5		12	7.144	41.5	34.1	2.5×1	33600	77500	733	86	128	48	18	117	9	106	11	17.5	11	Rc1/8
ZFT 4016-3		16	7.144	41.5	34.1	1.5×1	21700	46500	451	86	128	48	22	118	14	106	11	17.5	11	Rc1/8
ZFT 4510-5	45	10	6.35	46	39.4	2.5×1	29900	77300	784	88	132	50	18	103	7	110	11	17.5	11	Rc1/8
ZFT 4512-5		12	7.144	46.5	39.1	2.5×1	35400	88500	811	90	132	50	18	119	8	110	11	17.5	11	Rc1/8

Remarks 1. Flange comes in Circular I and Circular II shape. Select a flange that is suitable for the nut installation space.
2. If there is no seal, the nut length is shorter by the length of "M" than those with a seal.
3. The right turn screw is standard. "L" is added to the end of the model code for the left turn screw.
4. Rigidity in the Table is theoretical value obtained from the elastic deformation between screw groove and ball when the preload is 10% of the basic dynamic load rating (C_a), and axial load is applied to it. Refer to "Technical Description" (Page B521) if preload differs from the conditions above, or when considering change in the deformation of the ball nut itself.

www.bergab.ru Берг АБ bergab@ya.ru Тел. (495)-228-06-21, факс (495) 223-3071

www.bergab.ru Берг АБ bergab@ya.ru Тел. (495)-228-06-21, факс (495) 223-3071

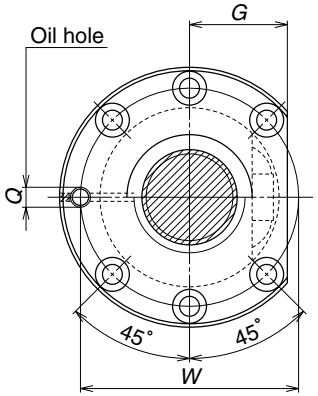

Circular shape II (semi-circular)

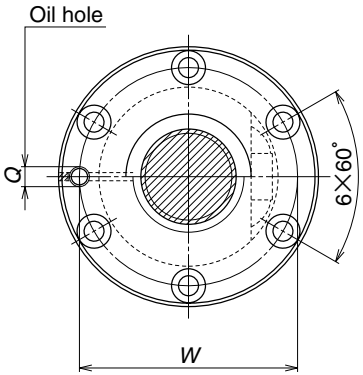

Circular shape I

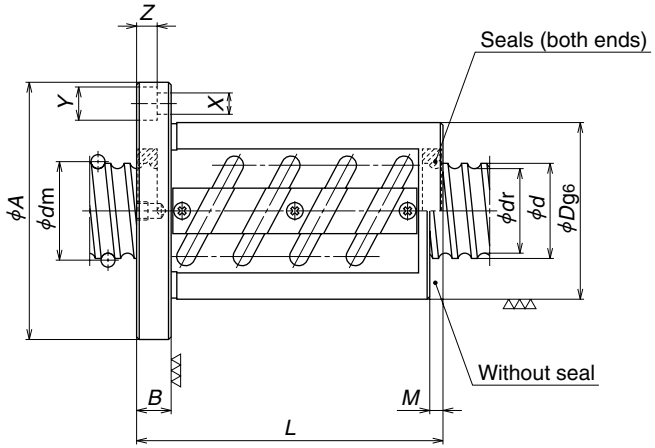

Unit: mm

Model No.	Shaft dia. d	Lead l	Ball dia. D_w	Ball circle dia. d_m	Root dia. d_r	Effective turns of balls Turns × Circuits	Basic load rating (N) Dynamic C_a	Static C_{0a}	Axial rigidity K (N/μm)	Ball nut dimensions D	A	G	B	L	M	W	X	Y	Z	Q
ZFT 5005-6	50	5	3.175	50.5	47.2	1.5×2	14200	52500	930	80	114	43	15	83	3	96	9	14	8.5	Rc1/8
ZFT 5005-9						1.5×3	20200	78800	1360					103						
ZFT 5006-10		6	3.969	50.5	46.4	2.5×2	30300	109000	1562	84	118	45	15	104	3	100	9	14	8.5	Rc1/8
ZFT 5008-10		8	4.762	50.5	45.5	2.5×2	38700	131000	1600	87	129	49	18	133	5	107	11	17.5	11	Rc1/8
ZFT 5010-5		10	6.35	51.0	44.4	2.5×1	31800	87400	866	93	135	51	18	103	7	113	11	17.5	11	Rc1/8
ZFT 5010-7						3.5×1	42500	122000	1190					123						
ZFT 5010-10						2.5×2	57700	175000	1677					163						
ZFT 5012-5		12	7.938	51.5	43.2	2.5×1	42800	107000	883	100	146	55	22	123	8	122	14	20	13	Rc1/8
ZFT 5016-5		16	7.938	51.5	43.2	2.5×1	42800	107000	883	100	146	55	22	152	14	122	14	20	13	Rc1/8
ZFT 5020-3		20	7.938	51.5	43.2	1.5×1	27600	64300	542	100	146	55	28	147	17	122	14	20	13	Rc1/8
ZFT 5510-5	55	10	6.35	56.0	49.4	2.5×1	32800	96100	929	102	144	54	18	103	7	122	11	17.5	11	Rc1/8
ZFT 5510-10						2.5×2	59500	192000	1800					163						
ZFT 6310-5	63	10	6.35	64.0	57.4	2.5×1	34800	111000	1038	108	154	58	22	107	7	130	14	20	13	Rc1/8
ZFT 6310-10						2.5×2	63200	221000	2000					167						
ZFT 6312-5		12	7.938	64.5	56.2	2.5×1	47400	137000	1060	115	161	61	22	123	8	137	14	20	13	Rc1/8

Remarks 1. Flange comes in Circular I and Circular II shape. Select a flange that is suitable for the nut installation space.
2. If there is no seal, the nut length is shorter by the length of "M" than those with a seal.
3. The right turn screw is standard. "L" is added to the end of the model code for the left turn screw.
4. Rigidity in the Table is theoretical value obtained from the elastic deformation between screw groove and ball when the preload is 10% of the basic dynamic load rating (C_a), and axial load is applied to it. Refer to "Technical Description" (Page B521) if preload differs from the conditions above, or when considering change in the deformation of the ball nut itself.

www.bergab.ru Берг АБ bergab@ya.ru Тел. (495)-228-06-21, факс (495) 223-3071

www.bergab.ru Берг АБ bergab@ya.ru Тел. (495)-228-06-21, факс (495) 223-3071

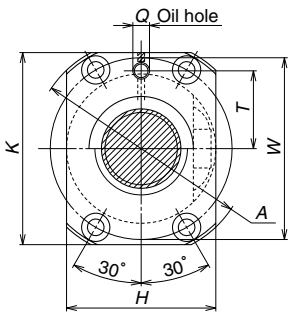

Rectangular shape
Screw shaft dia. $d \leqq 16$mm

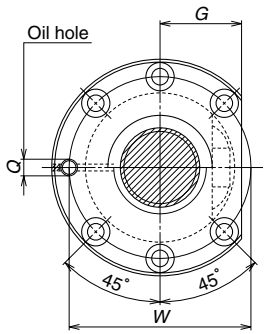

Circular shape II (semi-circular)
Screw shaft dia. $d \geqq 20$mm

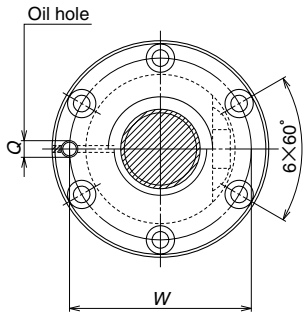

Circular shape I

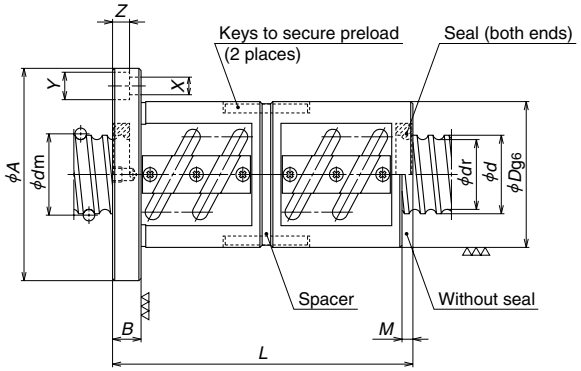

Unit: mm

Model No.	Shaft dia. d	Lead l	Ball dia. D_w	Ball circle dia. d_m	Root dia. d_r	Effective turns of balls Turns × Circuits	Basic load rating (N) Dynamic C_a	Static C_{0a}	Axial rigidity K (N/μm)	Ball nut dimensions D	A	G	H	K	B	L	M	W	X	Y	Z	Q	T
DFT 1604-2.5	16	4	2.381	16.3	13.8	2.5×1	4300	8530	263	36	57	—	36	50	11	70	—	45	5.5	9.5	5.5	M6×1	17
DFT 1604-3						1.5×2	5040	10300	315							85							
DFT 1605-2.5		5	3.175	16.5	13.2	2.5×1	7330	13500	311	40	63	—	40	55	11	77	—	51	5.5	9.5	5.5	M6×1	20
DFT 1605-3						1.5×2	8570	16200	370							97							
DFT 1605-5						2.5×2	13300	27000	603							107							
DFT 1606-2.5		6	3.175	16.5	13.2	2.5×1	7330	13500	311	40	63	—	40	55	11	86	—	51	5.5	9.5	5.5	M6×1	20
DFT 1606-3						1.5×2	8570	16200	370							110							
DFT 2004-2.5	20	4	2.381	20.3	17.8	2.5×1	4740	10700	315	40	63	24	—	—	11	69	3	51	5.5	9.5	5.5	M6×1	—
DFT 2004-5						2.5×2	8600	21500	608							93							
DFT 2005-2.5		5	3.175	20.5	17.2	2.5×1	8230	17100	376	44	67	26	—	—	11	76	3	55	5.5	9.5	5.5	M6×1	—
DFT 2005-3						1.5×2	9620	20600	446							97							
DFT 2005-5						2.5×2	14900	34300	726							106							
DFT 2006-2.5		6	3.969	20.5	16.4	2.5×1	11000	21100	384	48	71	27	—	—	11	86	3	59	5.5	9.5	5.5	M6×1	—
DFT 2006-3						1.5×2	12800	25300	456							110							
DFT 2008-2.5		8	3.969	20.5	16.4	2.5×1	11000	21100	384	48	75	28	—	—	13	102	5	61	6.6	11	6.5	M6×1	—
DFT 2008-3						1.5×2	12800	25300	456							120							
DFT 2504-2.5	25	4	2.381	25.3	22.8	2.5×1	5270	13600	379	46	69	26	—	—	11	68	3	57	5.5	9.5	5.5	M6×1	—
DFT 2504-5						2.5×2	9560	27200	735							92							
DFT 2505-2.5		5	3.175	25.5	22.2	2.5×1	9130	21900	453	50	73	28	—	—	11	75	3	61	5.5	9.5	5.5	M6×1	—
DFT 2505-3						1.5×2	10700	25700	532							102							
DFT 2505-5						2.5×2	16600	43700	876							105							
DFT 2506-2.5		6	3.969	25.5	21.4	2.5×1	12300	26800	462	53	76	29	—	—	11	86	3	64	5.5	9.5	5.5	M6×1	—
DFT 2506-3						1.5×2	14400	32100	551							110							
DFT 2506-5						2.5×2	22300	53500	896							122							

Remarks 1. Flanges come in Circular I and Circular II. Select a flange which is suitable for the nut installation space. Those with shaft diameter of 16 mm and smaller are rectangle.
2. If there is no seal, the nut length is shorter by the length of "M" than those with a seal.
3. Right turn screw is standard. "L" is added to the end of the model code for left turn screw.
4. Rigidity in the Table is theoretical value obtained from the elastic deformation between screw groove and ball when the preload is 10% of the basic dynamic load rating (C_a), and axial load is applied to it. Refer to "Technical Description" (Page B521) if preload differs from the conditions above, or when considering change in the deformation of the ball nut itself.

www.bergab.ru Берг АБ bergab@ya.ru Тел. (495)-228-06-21, факс (495) 223-3071

www.bergab.ru Берг АБ bergab@ya.ru Тел. (495)-228-06-21, факс (495) 223-3071

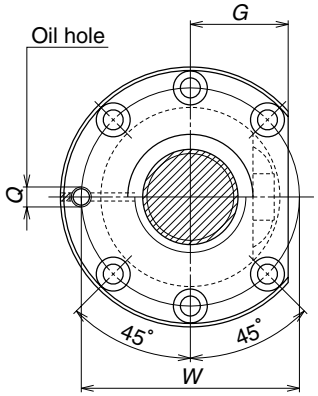

Circular shape II (semi-circular)

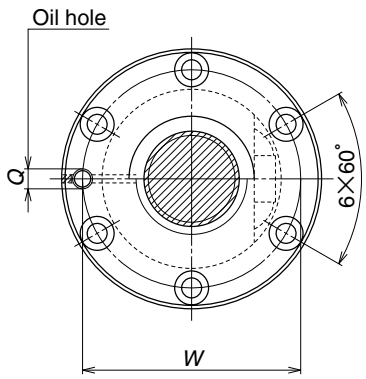

Circular shape I

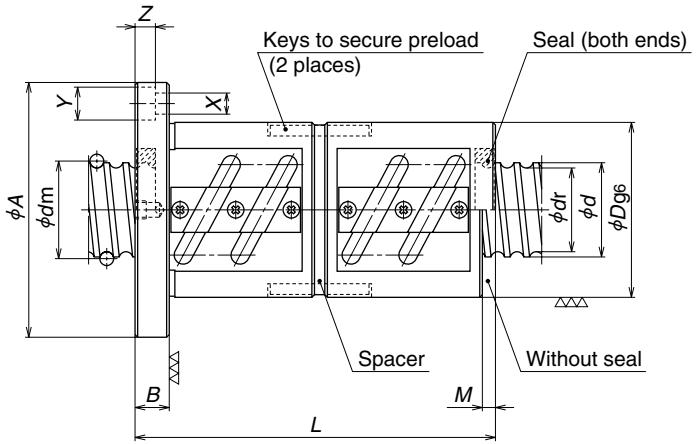

Unit: mm

Model No.	Shaft dia. d	Lead l	Ball dia. D_w	Ball circle dia. d_m	Root dia. d_r	Effective turns of balls Turns × Circuits	Basic load rating (N) Dynamic C_a	Static C_{0a}	Axial rigidity K (N/μm)	Ball nut dimensions D	A	G	B	L	M	W	X	Y	Z	Q
DFT 2508-2.5	25	8	4.762	25.5	20.5	2.5×1	15800	32000	475	58	85	32	13	104	5	71	6.6	11	6.5	M6×1
DFT 2508-3						1.5×2	18500	38100	562					133						
DFT 2510-2.5		10	4.762	25.5	20.5	2.5×1	15800	32000	475	58	85	32	15	127	8	71	6.6	11	6.5	M6×1
DFT 2510-3						1.5×2	18500	38100	562					151						
DFT 2510-3.5						3.5×1	21100	44200	649					147						
DFT 2805-2.5	28	5	3.175	28.5	25.2	2.5×1	9600	24400	495	55	85	31	12	76	3	69	6.6	11	6.5	M6×1
DFT 2805-5						2.5×2	17400	48800	959					106						
DFT 2806-2.5		6	3.175	28.5	25.2	2.5×1	9600	24400	495	55	85	31	12	87	3	69	6.6	11	6.5	M6×1
DFT 2806-3						1.5×2	11200	29300	590					111						
DFT 2806-5						2.5×2	17400	48800	959					123						
DFT 2810-2.5		10	4.762	28.5	23.5	2.5×1	16700	36100	522	60	94	36	15	128	7	76	9	14	8.5	M6×1
DFT 2810-3						1.5×2	19500	43000	618					152						
DFT 3204-2.5	32	4	2.381	32.3	29.8	2.5×1	5800	17500	461	54	81	31	12	69	3	67	6.6	11	6.5	M6×1
DFT 3204-5						2.5×2	10500	35100	892					93						
DFT 3205-2.5		5	3.175	32.5	29.2	2.5×1	10200	28000	552	58	85	32	12	76	3	71	6.6	11	6.5	M6×1
DFT 3205-3						1.5×2	11900	33600	655					103						
DFT 3205-5						2.5×2	18500	56100	1067					106						
DFT 3205-7.5						2.5×3	26200	84100	1572					136						
DFT 3206-2.5		6	3.969	32.5	28.4	2.5×1	13600	34700	563	62	89	34	12	87	3	75	6.6	11	6.5	M6×1
DFT 3206-3						1.5×2	15900	41200	666					111						
DFT 3206-5						2.5×2	24700	69400	1092					123						
DFT 3208-2.5		8	4.762	32.5	27.5	2.5×1	17500	41000	573	66	100	38	15	106	5	82	9	14	8.5	M6×1
DFT 3208-3						1.5×2	20400	49500	686					135						
DFT 3208-5						2.5×2	31700	82000	1110					154						
DFT 3210-2.5		10	6.35	33.0	26.4	2.5×1	25500	54000	594	74	108	41	15	130	7	90	9	14	8.5	M6×1
DFT 3210-3						1.5×2	29900	64800	707					167						
DFT 3210-3.5						3.5×1	34100	77000	829					150						
DFT 3210-5						2.5×2	46300	108000	1150					190						
DFT 3212-2.5		12	6.35	33.0	26.4	2.5×1	25500	54000	603	74	108	41	18	153	9	90	9	14	8.5	M6×1
DFT 3212-3						1.5×2	29900	64800	707					181						

Remarks 1. Flange comes in Circular I and Circular II shape. Select a flange that is suitable for the nut installation space.
2. If there is no seal, the nut length is shorter by the length of "M" than those with a seal.
3. The right turn screw is standard. "L" is added to the end of the model code for the left turn screw.
4. Rigidity in the Table is theoretical value obtained from the elastic deformation between screw groove and ball when the preload is 10% of the basic dynamic load rating (C_a), and axial load is applied to it. Refer to "Technical Description" (Page B521) if preload differs from the conditions above, or when considering change in the deformation of the ball nut itself.

www.bergab.ru Берг АБ bergab@ya.ru Тел. (495)-228-06-21, факс (495) 223-3071

www.bergab.ru Берг АБ bergab@ya.ru Тел. (495)-228-06-21, факс (495) 223-3071

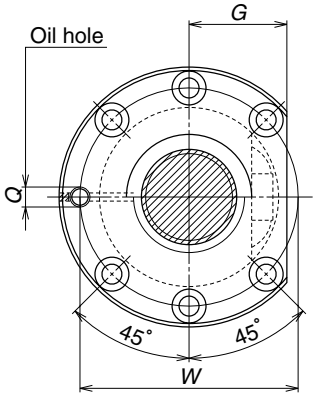

Circular shape II (semi-circular)

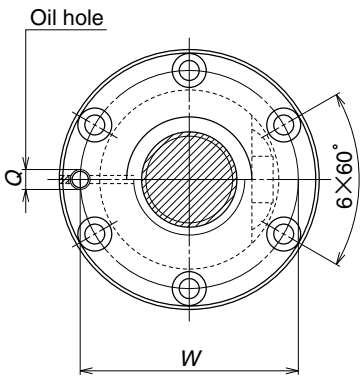

Circular shape I

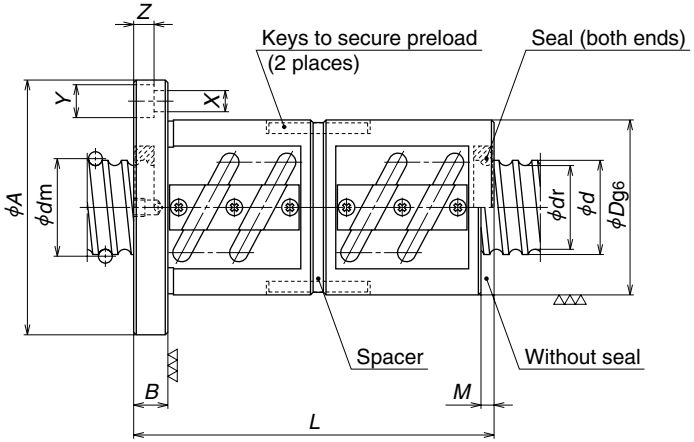

Unit: mm

Model No.	Shaft dia. d	Lead l	Ball dia. D_w	Ball circle dia. d_m	Root dia. d_r	Effective turns of balls Turns × Circuits	Basic load rating (N) Dynamic C_a	Static C_{0a}	Axial rigidity K (N/μm)	Ball nut dimensions D	A	G	B	L	M	W	X	Y	Z	Q
DFT 3605-5	36	5	3.175	36.5	33.2	2.5×2	19400	63300	1170	65	100	38	15	109	3	82	9	14	8.5	M6×1
DFT 3605-7.5						2.5×3	27500	95000	1730					139						
DFT 3606-5		6	3.969	36.5	32.4	2.5×2	26500	78500	1210	65	100	38	15	126	3	82	9	14	8.5	M6×1
DFT 3606-7.5						2.5×3	37600	118000	1780					162						
DFT 3610-2.5		10	6.35	37.0	30.4	2.5×1	27200	61300	656	75	120	45	18	133	7	98	11	17.5	11	M6×1
DFT 3610-3						1.5×2	31800	73500	781					170						
DFT 3610-5						2.5×2	49300	123000	1270					193						
DFT 4005-2.5	40	5	3.175	40.5	37.2	2.5×1	11100	35300	660	67	101	39	15	79	3	83	9	14	8.5	Rc1/8
DFT 4005-3						1.5×2	13000	42400	785					106						
DFT 4005-5						2.5×2	20200	70600	1280					109						
DFT 4005-7.5						2.5×3	28700	106000	1870					139						
DFT 4006-3		6	3.969	40.5	36.4	1.5×2	17800	52600	807	70	104	40	15	114	3	86	9	14	8.5	Rc1/8
DFT 4006-5						2.5×2	27600	87600	1310					126						
DFT 4006-7.5						2.5×3	39100	131000	1940					162						
DFT 4008-2.5		8	4.762	40.5	35.5	2.5×1	19200	51600	686	74	108	41	15	106	5	90	9	14	8.5	Rc1/8
DFT 4008-3						1.5×2	22500	62600	822					135						
DFT 4008-5						2.5×2	34900	103000	1330					154						
DFT 4010-2.5		10	6.35	41.0	34.4	2.5×1	28600	68600	717	82	124	47	18	133	7	102	11	17.5	11	Rc1/8
DFT 4010-3						1.5×2	33500	82300	853					170						
DFT 4010-3.5						3.5×1	38300	96000	988					153						
DFT 4010-5						2.5×2	52000	137000	1390					193						
DFT 4012-2.5		12	7.144	41.5	34.1	2.5×1	33600	77500	733	86	128	48	18	153	9	106	11	17.5	11	Rc1/8
DFT 4012-5						2.5×2	61000	155000	1420					225						
DFT 4016-2.5		16	7.144	41.5	34.1	2.5×1	33600	77500	733	86	128	48	22	182	14	106	11	17.5	11	Rc1/8
DFT 4016-3						1.5×2	39300	93100	872					214						
DFT 4510-5	45	10	6.35	46.0	39.4	2.5×2	54200	155000	1520	88	132	50	18	193	7	110	11	17.5	11	Rc1/8
DFT 4510-7.5						2.5×3	76800	232000	2230					253						
DFT 4512-2.5		12	7.144	46.5	39.1	2.5×1	35400	88500	811	90	132	50	18	155	8	110	11	17.5	11	Rc1/8
DFT 4512-5						2.5×2	64200	177000	1570					227						

Remarks 1. Flange comes in Circular I and Circular II shape. Select a flange that is suitable for the nut installation space.
2. If there is no seal, the nut length is shorter by the length of "M" than those with a seal.
3. The right turn screw is standard. "L" is added to the end of the model code for the left turn screw.
4. Rigidity in the Table is theoretical value obtained from the elastic deformation between screw groove and ball when the preload is 10% of the basic dynamic load rating (C_a), and axial load is applied to it. Refer to "Technical Description" (Page B521) if preload differs from the conditions above, or when considering change in the deformation of the ball nut itself.

www.bergab.ru Берг АБ bergab@ya.ru Тел. (495)-228-06-21, факс (495) 223-3071

www.bergab.ru Берг АБ bergab@ya.ru Тел. (495)-228-06-21, факс (495) 223-3071

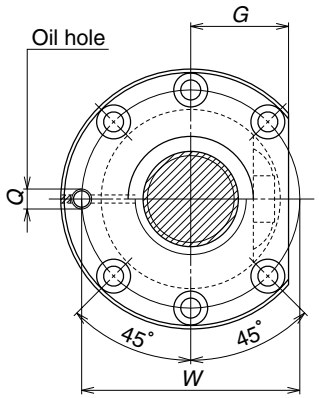

Circular shape II (semi-circular)

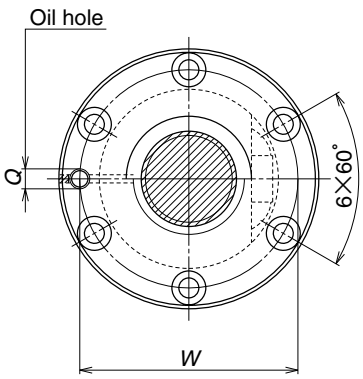

Circular shape I

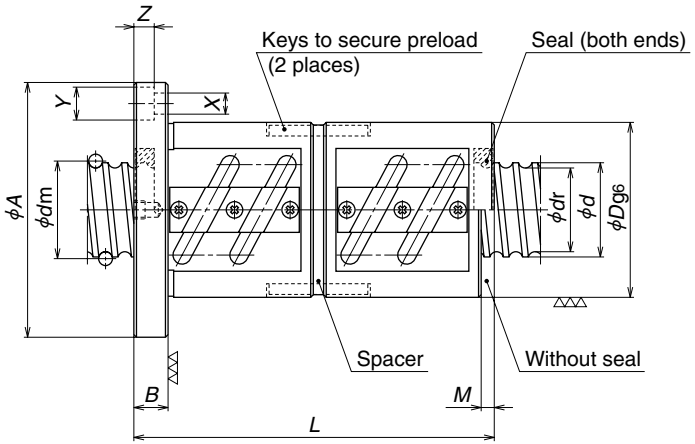

Unit: mm

Model No.	Shaft dia. d	Lead l	Ball dia. D_w	Ball circle dia. d_m	Root dia. d_r	Effective turns of balls Turns × Circuits	Basic load rating (N) Dynamic C_a	Static C_{0a}	Axial rigidity K (N/μm)	Ball nut dimensions D	A	G	B	L	M	W	X	Y	Z	Q
DFT 5005-3	50	5	3.175	50.5	47.2	1.5×2	14200	52500	929	80	114	43	15	108	3	96	9	14	8.5	Rc1/8
DFT 5005-4.5						1.5×3	20200	78800	1370					128						
DFT 5006-3		6	3.969	50.5	46.4	1.5×2	19500	65100	956	84	118	45	15	116	3	100	9	14	8.5	Rc1/8
DFT 5006-5						2.5×2	30300	109000	1560					128						
DFT 5006-7.5						2.5×3	42900	164000	2300					164						
DFT 5008-3		8	4.762	50.5	45.5	1.5×2	25000	77400	975	87	129	49	18	138	5	107	11	17.5	11	Rc1/8
DFT 5008-5						2.5×2	38700	131000	1600					157						
DFT 5008-7.5						2.5×3	54900	197000	2350					205						
DFT 5010-2.5		10	6.35	51.0	44.4	2.5×1	31800	87400	866	93	135	51	18	133	7	113	11	17.5	11	Rc1/8
DFT 5010-3						1.5×2	37200	103000	1010					170						
DFT 5010-5						2.5×2	57700	175000	1680					193						
DFT 5010-7.5						2.5×3	81800	262000	2460					253						
DFT 5012-2.5		12	7.938	51.5	43.2	2.5×1	42800	107000	883	100	146	55	22	159	8	122	14	20	13	Rc1/8
DFT 5012-5						2.5×2	77600	214000	1710					231						
DFT 5016-2.5		16	7.938	51.5	43.2	2.5×1	42800	107000	883	100	146	55	22	184	14	122	14	20	13	Rc1/8
DFT 5016-5						2.5×2	77600	214000	1710					280						
DFT 5020-2.5		20	7.938	51.5	43.2	2.5×1	42800	107000	883	100	146	55	28	227	17	122	14	20	13	Rc1/8
DFT 5020-3						1.5×2	50000	129000	1050					267						
DFT 5510-5	55	10	6.35	56.0	49.4	2.5×2	59500	192000	1800	102	144	54	18	193	7	122	11	17.5	11	Rc1/8
DFT 5510-7.5						2.5×3	84300	288000	2650					253						
DFT 6310-2.5	63	10	6.35	64.0	57.4	2.5×1	34800	111000	1040	108	154	58	22	137	7	130	14	20	13	Rc1/8
DFT 6310-5						2.5×2	63200	221000	2000					197						
DFT 6310-7.5						2.5×3	89500	332000	2950					257						
DFT 6312-2.5		12	7.938	64.5	56.2	2.5×1	47400	137000	1060	115	161	61	22	159	8	137	14	20	13	Rc1/8
DFT 6312-5						2.5×2	86000	273000	2060					231						

Remarks 1. Flange comes in Circular I and Circular II shape. Select a flange that is suitable for the nut installation space.
2. If there is no seal, the nut length is shorter by the length of "M" than those with a seal.
3. The right turn screw is standard. "L" is added to the end of the model code for the left turn screw.
4. Rigidity in the Table is theoretical value obtained from the elastic deformation between screw groove and ball when the preload is 10% of the basic dynamic load rating (C_a), and axial load is applied to it. Refer to "Technical Description" (Page B521) if preload differs from the conditions above, or when considering change in the deformation of the ball nut itself.

www.bergab.ru Берг АБ bergab@ya.ru Тел. (495)-228-06-21, факс (495) 223-3071

www.bergab.ru Берг АБ bergab@ya.ru Тел. (495)-228-06-21, факс (495) 223-3071

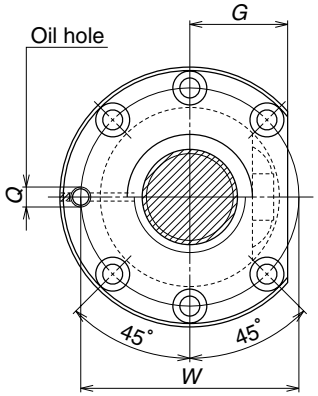

Circular shape II (semi-circular)

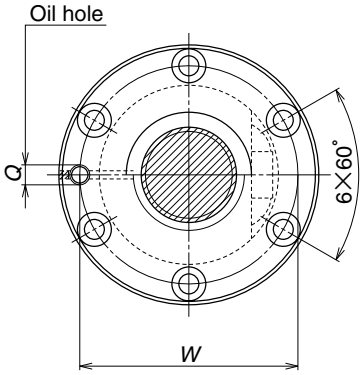

Circular shape I

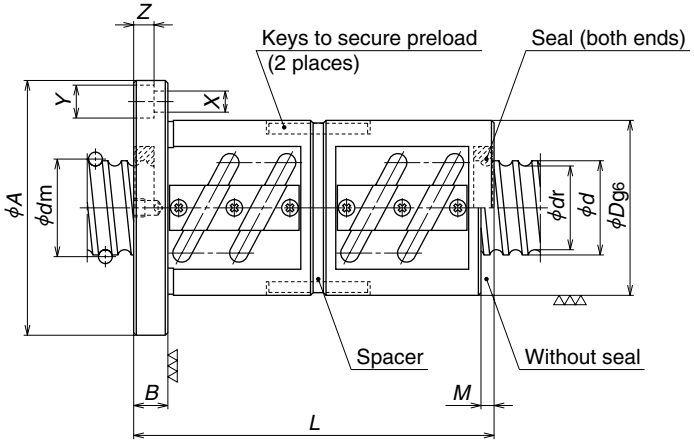

Unit: mm

Model No.	Shaft dia. d	Lead l	Ball dia. D_w	Ball circle dia. d_m	Root dia. d_r	Effective turns of balls Turns × Circuits	Basic load rating (N) Dynamic C_a	Static C_{0a}
DFT 6316-2.5 **DFT 6316-5**	63	16	9.525	65.0	55.2	2.5×1 2.5×2	79500 144000	228000 455000
DFT 6320-2.5 **DFT 6320-5**		20	9.525	65.0	55.2	2.5×1 2.5×2	79500 144000	228000 455000
DFT 8010-5 **DFT 8010-7.5**	80	10	6.35	81.0	74.4	2.5×2 2.5×3	70500 99800	282000 424000
DFT 8012-5 **DFT 8012-7.5**		12	7.938	81.5	73.2	2.5×2 2.5×3	96000 136000	350000 526000
DFT 8016-5 **DFT 8016-7.5**		16	9.525	82.0	72.2	2.5×2 2.5×3	162000 230000	582000 874000
DFT 8020-5 **DFT 8020-7.5**		20	9.525	82.0	72.2	2.5×2 2.5×3	162000 230000	582000 874000
DFT 10012-5 **DFT 10012-7.5**	100	12	7.938	101.5	93.2	2.5×2 2.5×3	105000 149000	441000 662000
DFT 10016-5 **DFT 10016-7.5**		16	9.525	102.0	92.2	2.5×2 2.5×3	176000 250000	737000 1100000
DFT 10020-5 **DFT 10020-7.5**		20	9.525	102.0	92.2	2.5×2 2.5×3	176000 250000	737000 1100000
DFT 12516-5 **DFT 12516-7.5**	125	16	9.525	127.0	117.2	2.5×2 2.5×3	195000 277000	918000 1380000
DFT 12520-5 **DFT 12520-7.5**		20	9.525	127.0	117.2	2.5×2 2.5×3	195000 277000	918000 1380000

Axial rigidity K (N/μm)	Ball nut dimensions D	A	G	B	L	M	W	X	Y	Z	Q
1400 2710	122	180	69	28	206 302	10	150	18	26	17.5	Rc1/8
1400 2710	122	180	69	28	227 347	17	150	18	26	17.5	Rc1/8
2430 3590	130	176	66	22	197 257	7	152	14	20	13	Rc1/8
2500 3690	136	182	68	22	231 303	8	158	14	20	13	Rc1/8
3300 4850	143	204	77	28	302 398	10	172	18	26	17.5	Rc1/8
3300 4850	143	204	77	28	347 467	17	172	18	26	17.5	Rc1/8
2990 4400	160	220	82	28	237 309	8	188	18	26	17.5	Rc1/8
3930 5790	170	243	91	32	306 402	10	205	22	32	21.5	Rc1/8
3930 5780	170	243	91	32	351 471	17	205	22	32	21.5	Rc1/8
4690 6890	200	290	109	36	314 410	10	243	26	39	25.5	Rc1/8
4690 6890	200	290	109	36	379 499	12	243	26	39	25.5	Rc1/8

Remarks 1. Flange comes in Circular I and Circular II shape. Select a flange that is suitable for the nut installation space.
2. If there is no seal, the nut length is shorter by the length of "M" than those with a seal.
3. The right turn screw is standard. "L" is added to the end of the model code for the left turn screw.
4. Rigidity in the Table is theoretical value obtained from the elastic deformation between screw groove and ball when the preload is 10% of the basic dynamic load rating (C_a), and axial load is applied to it. Refer to "Technical Description" (Page B521) if preload differs from the conditions above, or when considering change in the deformation of the ball nut itself.

www.bergab.ru Берг АБ bergab@ya.ru Тел. (495)-228-06-21, факс (495) 223-3071

www.bergab.ru Берг АБ bergab@ya.ru Тел. (495)-228-06-21, факс (495) 223-3071

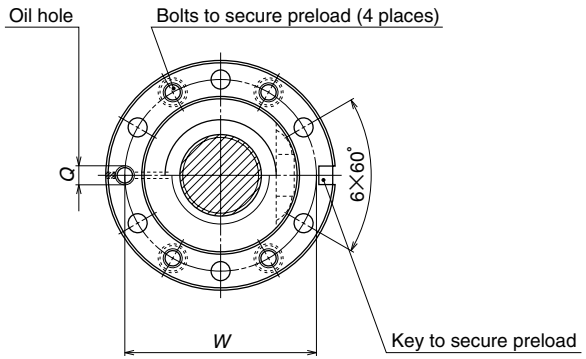

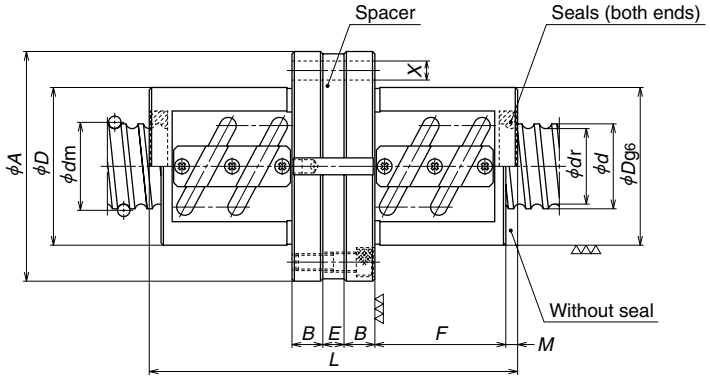

Unit: mm

Model No.	Shaft dia. d	Lead l	Ball dia. D_w	Ball circle dia. d_m	Root dia. d_r	Effective turns of balls Turns × Circuits	Basic load rating (N) Dynamic C_a	Static C_{0a}	Axial rigidity K (N/μm)	Ball nut dimensions D	A	B	F	E	L	M	W	X	Q
DFFT2004-2.5	20	4	2.381	20.3	17.8	2.5×1	4740	10700	315	40	63	11	23	3	77	3	51	5.5	M6×1
DFFT2004-5						2.5×2	8600	21500	608				35	3	101				
DFFT2005-2.5		5	3.175	20.5	17.2	2.5×1	8230	17100	376	44	67	11	27	5	87	3	55	5.5	M6×1
DFFT2005-3						1.5×2	9620	20600	446				38	4	108				
DFFT2005-5						2.5×2	14900	34300	726				42	5	117				
DFFT2006-2.5		6	3.969	20.5	16.4	2.5×1	11000	21100	384	48	71	11	30	7	95	3	59	5.5	M6×1
DFFT2006-3						1.5×2	12800	25300	456				42	7	119				
DFFT2504-2.5	25	4	2.381	25.3	22.8	2.5×1	5270	13600	379	46	69	11	22	4	76	3	57	5.5	M6×1
DFFT2504-5						2.5×2	9560	27200	735				34	4	100				
DFFT2505-2.5		5	3.175	25.5	22.2	2.5×1	9130	21900	453	50	73	11	26	6	86	3	61	5.5	M6×1
DFFT2505-3						1.5×2	10700	25700	532				38	4	108				
DFFT2505-5						2.5×2	16600	43700	876				41	6	116				
DFFT2506-2.5		6	3.969	25.5	21.4	2.5×1	12300	26800	462	53	76	11	30	7	95	3	64	5.5	M6×1
DFFT2506-3						1.5×2	14400	32100	551				42	7	119				
DFFT2506-5						2.5×2	22300	53500	896				48	7	131				
DFFT2508-2.5		8	4.762	25.5	20.5	2.5×1	15800	32000	475	58	85	13	38	5	117	5	71	6.6	M6×1
DFFT2508-3						1.5×2	18500	38100	562				51	8	146				
DFFT2510-2.5		10	4.762	25.5	20.5	2.5×1	15800	32000	475	58	85	15	44	11	145	8	71	6.6	M6×1
DFFT2510-3						1.5×2	18500	38100	562				58	7	169				
DFFT3204-2.5	32	4	2.381	32.3	29.8	2.5×1	5800	17500	461	54	81	12	22	6	80	3	67	6.6	M6×1
DFFT3204-5						2.5×2	10500	35100	892				34	6	104				
DFFT3205-2.5		5	3.175	32.5	29.2	2.5×1	10200	28000	552	58	85	12	26	4	86	3	71	6.6	M6×1
DFFT3205-3						1.5×2	11900	33600	655				38	7	113				
DFFT3205-5						2.5×2	18500	56100	1070				41	4	116				
DFFT3205-7.5						2.5×3	26200	84100	1570				56	4	146				
DFFT3206-2.5		6	3.969	32.5	28.4	2.5×1	13600	34700	563	62	89	12	30	5	95	3	75	6.6	M6×1
DFFT3206-3						1.5×2	15900	41200	666				42	5	119				
DFFT3206-5						2.5×2	24700	69400	1090				48	5	131				
DFFT3208-2.5		8	4.762	32.5	27.5	2.5×1	17500	41000	573	66	100	15	38	9	125	5	82	9	M6×1
DFFT3208-3						1.5×2	20400	49500	686				51	12	154				
DFFT3208-5						2.5×2	31700	82000	1110				62	9	173				
DFFT3210-2.5		10	6.35	33.0	26.4	2.5×1	25500	54000	594	74	108	15	48	8	148	7	90	9	M6×1
DFFT3210-3						1.5×2	29900	64800	707				65	11	185				
DFFT3210-5						2.5×2	46300	108000	1150				78	8	208				

Remarks 1. If there is no seal, the nut length is shorter by the length of "2M" than those with a seal.
2. Right turn screw is standard. "L" is added to the end of the model code for left turn screw.
3. Rigidity in the Table is theoretical value obtained from the elastic deformation between screw groove and ball when the preload is 10% of the basic dynamic load rating (C_a), and axial load is applied to it. Refer to "Technical Description" (Page B521) if preload differs from the conditions above, or when considering change in the deformation of the ball nut itself.

www.bergab.ru Берг АБ bergab@ya.ru Тел. (495)-228-06-21, факс (495) 223-3071

www.bergab.ru Берг АБ bergab@ya.ru Тел. (495)-228-06-21, факс (495) 223-3071

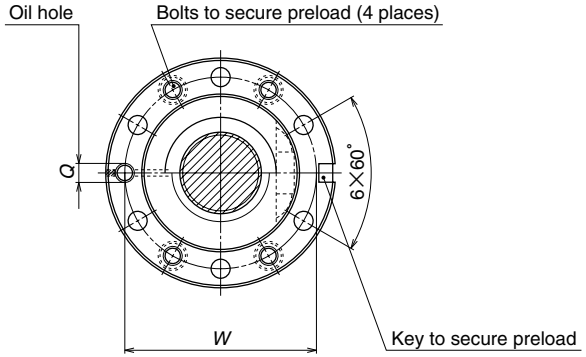

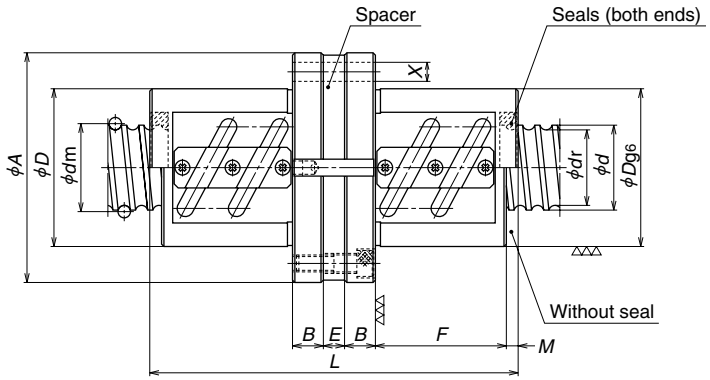

Unit: mm

Model No.	Shaft dia. d	Lead l	Ball dia. D_w	Ball circle dia. d_m	Root dia. d_r	Effective turns of balls Turns × Circuits	Basic load rating (N) Dynamic C_a	Static C_{0a}	Axial rigidity K (N/μm)	Ball nut dimensions D	A	B	F	E	L	M	W	X	Q
DFFT4005-2.5	40	5	3.175	40.5	37.2	2.5×1	11100	35300	660	67	101	15	26	8	96	3	83	9	Rc1/8
DFFT4005-3						1.5×2	13000	42400	785				38	6	118				
DFFT4005-5						2.5×2	20200	70600	1280				41	8	126				
DFFT4005-7.5						2.5×3	28700	106000	1870				56	8	156				
DFFT4006-3		6	3.969	40.5	36.4	1.5×2	17800	52600	807	70	104	15	42	5	125	3	86	9	Rc1/8
DFFT4006-5						2.5×2	27600	87600	1310				48	5	137				
DFFT4006-7.5						2.5×3	39100	131000	1940				66	5	173				
DFFT4008-2.5		8	4.762	40.5	35.5	2.5×1	19200	51600	686	74	108	15	38	9	125	5	90	9	Rc1/8
DFFT4008-3						1.5×2	22500	62600	822				51	12	154				
DFFT4008-5						2.5×2	34900	103000	1330				62	9	173				
DFFT4010-2.5		10	6.35	41.0	34.4	2.5×1	28600	68600	717	82	124	18	48	12	158	7	102	11	Rc1/8
DFFT4010-3						1.5×2	33500	82300	853				65	5	185				
DFFT4010-5						2.5×2	52000	137000	1390				78	12	218				
DFFT4012-2.5		12	7.144	41.5	34.1	2.5×1	33600	77500	733	86	128	18	54	12	174	9	106	11	Rc1/8
DFFT4012-5						2.5×2	61000	155000	1420				90	12	246				
DFFT5005-3	50	5	3.175	50.5	47.2	1.5×2	14200	52500	929	80	114	15	40	9	125	3	96	9	Rc1/8
DFFT5005-4.5						1.5×3	20200	78800	1370				50	9	145				
DFFT5006-3		6	3.969	50.5	46.4	1.5×2	19500	65100	956	84	118	15	44	9	133	3	100	9	Rc1/8
DFFT5006-5						2.5×2	30300	109000	1560				50	9	145				
DFFT5006-7.5						2.5×3	42900	164000	2300				68	9	181				
DFFT5008-3		8	4.762	50.5	45.5	1.5×2	25000	77400	975	87	129	18	51	6	154	5	107	11	Rc1/8
DFFT5008-5						2.5×2	38700	131000	1600				62	11	181				
DFFT5008-7.5						2.5×3	54900	197000	2350				86	11	229				
DFFT5010-2.5		10	6.35	51.0	44.4	2.5×1	31800	87400	866	93	135	18	48	12	158	7	113	11	Rc1/8
DFFT5010-3						1.5×2	37200	103000	1010				65	5	185				
DFFT5010-5						2.5×2	57700	175000	1680				78	12	218				
DFFT5010-7.5						2.5×3	81800	262000	2460				108	12	278				
DFFT5012-2.5		12	7.938	51.5	43.2	2.5×1	42800	107000	883	100	146	22	57	14	188	8	122	14	Rc1/8
DFFT5012-5						2.5×2	77600	214000	1710				93	14	260				
DFFT5016-2.5		16	7.938	51.5	43.2	2.5×1	42800	107000	883	100	146	22	68	6	214	14	122	14	Rc1/8
DFFT5016-5						2.5×2	77600	214000	1710				116	6	310				

Remarks 1. If there is no seal, the nut length is shorter by the length of "2M" than those with a seal.
2. Right turn screw is standard. "L" is added to the end of the model code for left turn screw.

3. Rigidity in the Table is theoretical value obtained from the elastic deformation between screw groove and ball when the preload is 10% of the basic dynamic load rating (C_a), and axial load is applied to it. Refer to "Technical Description" (Page B521) if preload differs from the conditions above, or when considering change in the deformation of the ball nut itself.

www.bergab.ru Берг АБ bergab@ya.ru Тел. (495)-228-06-21, факс (495) 223-3071

www.bergab.ru Берг АБ bergab@ya.ru Тел. (495)-228-06-21, факс (495) 223-3071

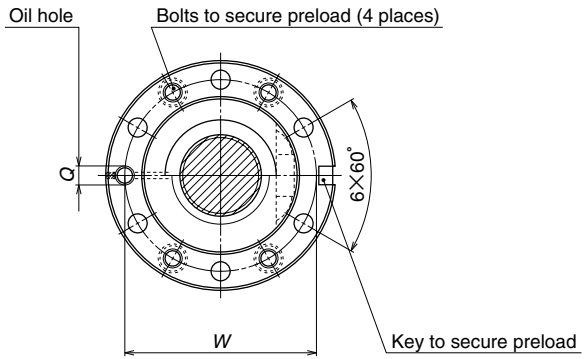

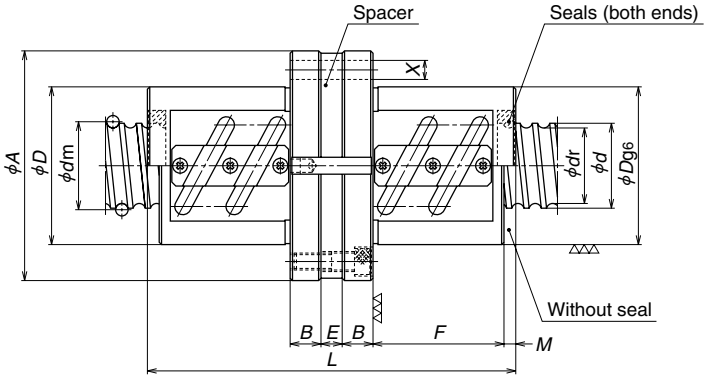

Unit: mm

Model No.	Shaft dia. d	Lead l	Ball dia. D_w	Ball circle dia. d_m	Root dia. d_r	Effective turns of balls Turns × Circuits	Basic load rating (N) Dynamic C_a	Static C_{0a}
DFFT6310-2.5	63	10	6.35	64.0	57.4	2.5×1	34800	111000
DFFT6310-5						2.5×2	63200	221000
DFFT6310-7.5						2.5×3	89500	332000
DFFT6312-2.5		12	7.938	64.5	56.2	2.5×1	47400	137000
DFFT6312-5						2.5×2	86000	273000
DFFT6316-2.5		16	9.525	65.0	55.2	2.5×1	79500	228000
DFFT6316-5						2.5×2	144000	455000
DFFT6320-2.5		20	9.525	65.0	55.2	2.5×1	79500	228000
DFFT6320-5						2.5×2	144000	455000
DFFT8010-5	80	10	6.35	81.0	74.4	2.5×2	70500	282000
DFFT8010-7.5						2.5×3	99800	424000
DFFT8012-5		12	7.938	81.5	73.2	2.5×2	96000	350000
DFFT8012-7.5						2.5×3	136000	526000
DFFT8016-5		16	9.525	82.0	72.2	2.5×2	162000	582000
DFFT8016-7.5						2.5×3	230000	874000
DFFT8020-5		20	9.525	82.0	72.2	2.5×2	162000	582000
DFFT8020-7.5						2.5×3	230000	874000
DFFT10012-5	100	12	7.938	101.5	93.2	2.5×2	105000	441000
DFFT10012-7.5						2.5×3	149000	662000
DFFT10016-5		16	9.525	102.0	92.2	2.5×2	176000	737000
DFFT10016-7.5						2.5×3	250000	1100000
DFFT10020-5		20	9.525	102.0	92.2	2.5×2	176000	737000
DFFT10020-7.5						2.5×3	250000	1100000
DFFT12516-5	125	16	9.525	127.0	117.2	2.5×2	195000	918000
DFFT12516-7.5						2.5×3	277000	1380000
DFFT12520-5		20	9.525	127.0	117.2	2.5×2	195000	918000
DFFT12520-7.5						2.5×3	277000	1380000

Axial rigidity K (N/μm)	Ball nut dimensions D	A	B	F	E	L	M	W	X	Q
1040	108	154	22	48	14	168	7	130	14	Rc1/8
2000				78	14	228				
2950				108	14	288				
1060	115	161	22	57	14	188	8	137	14	Rc1/8
2060				93	14	260				
1400	122	180	28	72	10	230	10	150	18	Rc1/8
2710				120	10	326				
1400	122	180	28	82	10	264	17	150	18	Rc1/8
2710				142	10	384				
2430	130	176	22	78	14	228	7	152	14	Rc1/8
3590				108	14	288				
2500	136	182	22	93	14	260	8	158	14	Rc1/8
3700				129	14	332				
3300	143	204	28	120	10	326	10	172	18	Rc1/8
4850				168	10	422				
3300	143	204	28	142	10	384	17	172	18	Rc1/8
4850				202	10	504				
2990	160	220	28	93	14	272	8	188	18	Rc1/8
4400				129	14	344				
3930	170	243	32	120	18	342	10	205	22	Rc1/8
5790				168	18	438				
3930	170	243	32	142	22	404	17	205	22	Rc1/8
5790				202	22	524				
4690	200	290	36	124	22	362	10	243	26	Rc1/8
6890				172	22	458				
4690	200	290	36	151	10	408	12	243	26	Rc1/8
6890				211	10	528				

Remarks 1. If there is no seal, the nut length is shorter by the length of "2M" than those with a seal.
2. Right turn screw is standard. "L" is added to the end of the model code for left turn screw.

3. Rigidity in the Table is theoretical value obtained from the elastic deformation between screw groove and ball when the preload is 10% of the basic dynamic load rating (C_a), and axial load is applied to it. Refer to "Technical Description" (Page B521) if preload differs from the conditions above, or when considering change in the deformation of the ball nut itself.

www.bergab.ru Берг АБ bergab@ya.ru Тел. (495)-228-06-21, факс (495) 223-3071

www.bergab.ru Берг АБ bergab@ya.ru Тел. (495)-228-06-21, факс (495) 223-3071

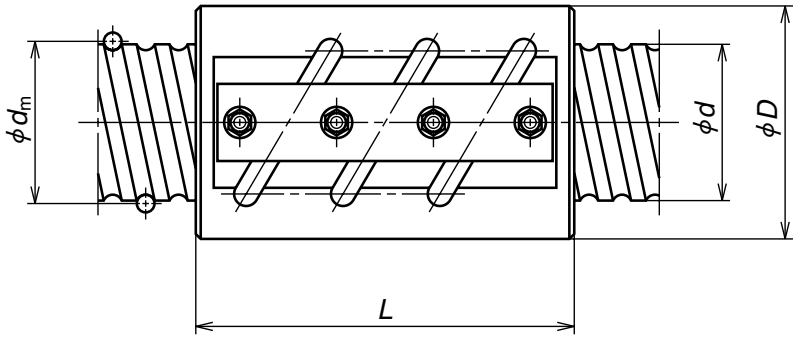

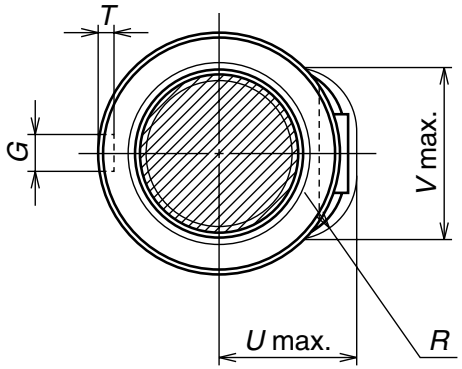

Unit: mm

Model No.	Shaft dia. d	Lead l	Ball dia. D_w	Ball circle dia. d_m	Root dia. d_r	Effective turns of balls Turns × Circuits	Axial play (Max.)	Basic load rating (N) Dynamic C_a	Static C_{0a}	Ball nut dimensions D	L	G	T	U	V	R	(MS)
GSCT12525-5	125	25	12.7	128	115.0	2.5×2	0.20	190000	1010000	180	197	32	11	100	136	40	40
GSCT12525-7.5						2.5×3		252000	1520000		272						
GSCT12532-5		32	15.875	128	111.0	2.5×2	0.25	259000	1250000	185	248	32	11	107	140	45	48
GSCT12532-7.5						2.5×3		344000	1880000		344						
GSCT14025-5	140	25	15.875	143	126.0	2.5×2	0.25	272000	1400000	210	200	32	11	115	154	50	40
GSCT14025-7.5						2.5×3		362000	2090000		275						
GSCT14032-5		32	22.225	144	121.0	2.5×2	0.35	428000	1920000	220	252	32	11	135	163	60	48
GSCT14032-7.5						2.5×3		568000	2880000		348						
GSCT14040-5		40	22.225	144	121.0	2.5×2	0.35	428000	1920000	220	306	32	11	135	163	60	58
GSCT14040-7.5						2.5×3		568000	2880000		426						
GSCT14050-5		50	25.4	145	119.0	2.5×2	0.40	518000	2190000	225	377	32	11	141	167	70	70
GSCT14050-7.5						2.5×3		688000	3290000		527						
GSCT16032-5	160	32	22.225	164	141.0	2.5×2	0.35	458000	2210000	245	252	36	12	141	180	60	48
GSCT16032-7.5						2.5×3		608000	3310000		348						
GSCT16040-5		40	22.225	164	141.0	2.5×2	0.35	458000	2210000	245	306	36	12	141	180	60	58
GSCT16040-7.5						2.5×3		608000	3310000		426						
GSCT16050-5		50	25.4	165	139.0	2.5×2	0.40	544000	2560000	250	377	36	12	147	185	70	70
GSCT16050-7.5						2.5×3		722000	3840000		527						
GSCT20032-5	200	32	22.225	204	181.0	2.5×2	0.35	509000	2820000	295	252	45	15	162	216	70	48
GSCT20032-7.5						2.5×3		676000	4230000		348						
GSCT20040-5		40	22.225	204	181.0	2.5×2	0.35	509000	2820000	295	306	45	15	162	216	70	58
GSCT20040-7.5						2.5×3		676000	4230000		426						
GSCT20050-5		50	25.4	205	179.0	2.5×2	0.40	604000	3200000	300	377	45	15	168	221	70	70
GSCT20050-7.5						2.5×3		802000	4800000		527						
GSCT25040-5	250	40	25.4	255	229.0	2.5×2	0.40	662000	4000000	355	312	50	17	194	266	70	58
GSCT25040-7.5						2.5×3		879000	6000000		432						
GSCT25050-5		50	31.75	256	223.0	2.5×2	0.51	825000	5000000	370	385	50	17	206	274	90	70
GSCT25050-7.5						2.5×3		1100000	7500000		535						

Remarks 1. Precision grade is equivalent to Ct10 grade of JIS B1192 (Refer to Page B499)
2. The entire nut length (L) is the size without seal. The size with a seal is longer by the size of "MS."

www.bergab.ru Берг АБ bergab@ya.ru Тел. (495)-228-06-21, факс (495) 223-3071

www.bergab.ru Берг АБ bergab@ya.ru Тел. (495)-228-06-21, факс (495) 223-3071

B-I-7.2 D Type (Deflector type, fine lead) Ball Screws

(1) Product categories

D Type ball screws use the deflector recirculation system. This can make the ball nut outside diameter smaller than the other recirculation systems. There are several models by difference in the preload system as shown below (Table I-7•2).

Table I-7•2 Classification of D Type ball screws

Nut models	Shape	Flange shape	Preload system	Nut length	Page
SFD	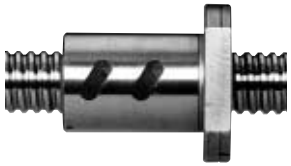	Flanged d=16 or under Rectangle d=20 or over Circular I Circular II	Non-preload, Slight axial play	Short	B355
ZFD		Flanged Circular I Circular II	Z preload (medium preload)	Medium	B359
DFD		Flanged Circular I Circular II	D preload (medium preload) (heavy preload)	Long	B363
DFFD		Flanged to flanged Circular I	D preload (medium preload) (heavy preload)	Long	B367
DCD	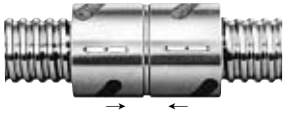 → ← Preload direction	No flange	D preload (medium preload) (heavy preload)	Long	B371

(2) Benefit of design and precautions

Internal recirculation contributes to the compact design. Please note that it is impossible to assemble the nut unless one end of ball thread on the screw shaft is cut through, and, unless the shaft end of this side is smaller than the ball groove root diameter.

(3) Special ball screw specifications

D Series is based on the JIS B1192 combinations (shaft diameter/lead). However, NSK manufactures combinations other than shown in the Dimension Tables, as well as flanges of special shape. Please consult NSK.

(4) Model number

A model number that indicates dimension factors is structured as shown below.

(Example) Nut model SFD shaft diameter 20 mm; lead 5 mm; effective turns of balls 3* (Note)

S F D 2 0 0 5 – 3

- Nut model
- Screw shaft diameter (mm)
- Lead (mm)
- Effective turns of balls

* Note: In case of Z preload, the number here is twice as large as the effective turns of balls.

www.bergab.ru Берг АБ bergab@ya.ru Тел. (495)-228-06-21, факс (495) 223-3071

www.bergab.ru Берг АБ bergab@ya.ru Тел. (495)-228-06-21, факс (495) 223-3071

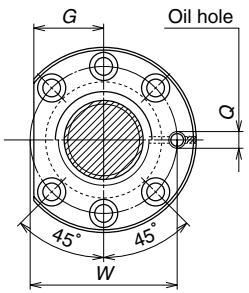

Circular shape II (semi-circular)

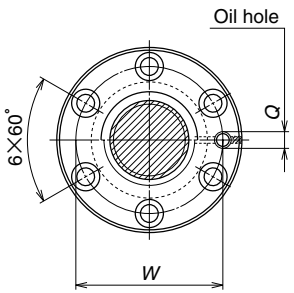

Circular shape I

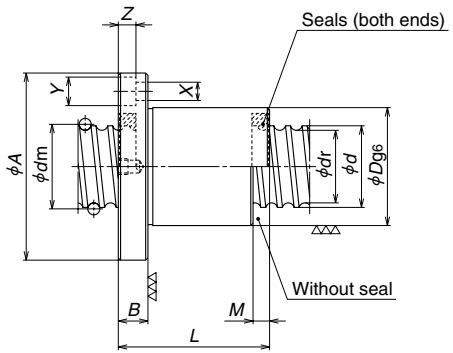

Unit: mm

Model No.	Shaft dia. d	Lead l	Ball dia. D_w	Ball circle dia. d_m	Root dia. d_r	Effective turns of balls Turns × Circuits	Basic load rating (N) Dynamic C_a	Static C_{0a}	Axial rigidity K (N/μm)	Ball nut dimensions D	A	G	B	L	M	W	X	Y	Z	Q
SFD 2005-3	20	5	3.175	20.75	17.4	1×3	8620	17500	196	35	58	22.5	11	46	5	46	5.5	9.5	5.5	M6×1
SFD 2005-4						1×4	11000	23300	255					51						
SFD 2006-3		6	3.969	21.0	16.9	1×3	11100	20600	196	35	58	22.5	11	52	6	46	5.5	9.5	5.5	M6×1
SFD 2006-4						1×4	14300	27500	255					60						
SFD 2505-3	25	5	3.175	25.75	22.4	1×3	9790	22900	245	40	63	24	11	46	5	51	5.5	9.5	5.5	M6×1
SFD 2505-4						1×4	12500	30500	323					51						
SFD 2506-3		6	3.969	26.0	21.9	1×3	12900	27300	245	40	63	24	11	52	6	51	5.5	9.5	5.5	M6×1
SFD 2506-4						1×4	16500	36500	323					60						
SFD 2510-3		10	4.762	26.25	21.3	1×3	16100	32000	245	42	69	26	15	80	10	55	6.6	11	6.5	M6×1
SFD 3205-3	32	5	3.175	32.75	29.4	1×3	11100	30500	304	48	75	29	12	47	5	61	6.6	11	6.5	M6×1
SFD 3205-4						1×4	14200	40700	409					52						
SFD 3205-6						1×6	20200	61000	588					62						
SFD 3206-3		6	3.969	33.0	28.9	1×3	15000	37500	314	48	75	29	12	53	6	61	6.6	11	6.5	M6×1
SFD 3206-4						1×4	19200	49900	412					61						
SFD 3206-6						1×6	27200	74900	598					73						
SFD 3208-3		8	4.762	33.25	28.3	1×3	18300	41800	304	50	84	32	15	67	8	66	9	14	8.5	M6×1
SFD 3208-4						1×4	23500	55800	392					76						
SFD 3210-3		10	6.35	33.75	27.1	1×3	25900	52800	300	54	88	34	15	80	10	70	9	14	8.5	M6×1
SFD 3210-4						1×4	33200	70300	392					90						
SFD 4005-4	40	5	3.175	40.75	37.4	1×4	15800	52300	490	56	90	34	15	55	5	72	9	14	8.5	Rc1/8
SFD 4005-6						1×6	22400	78400	725					65						
SFD 4006-4		6	3.969	41.0	36.9	1×4	21300	63500	490	56	90	34	15	64	6	72	9	14	8.5	Rc1/8
SFD 4006-6						1×6	30100	95300	725					76						
SFD 4008-4		8	4.762	41.25	36.3	1×4	27200	75200	500	60	94	36	15	76	8	76	9	14	8.5	Rc1/8
SFD 4008-6						1×6	38500	113000	735					93						
SFD 4010-3		10	6.35	41.75	35.1	1×3	30000	70000	372	62	104	40	18	83	10	82	11	17.5	11	Rc1/8
SFD 4010-4						1×4	38400	93300	490					93						

Remarks 1. Flange comes in Circular I and Circular II shape. Select a flange that is suitable for the nut installation space.
2. If there is no seal, the nut length is shorter by the length of "M" than those with a seal.
3. The right turn screw is standard. "L" is added to the end of the model code for the left turn screw.
4. Rigidity in the Table is theoretical value obtained from the elastic deformation between screw groove and ball when the axial load is 30% of the basic dynamic load rating (C_a). Refer to "Technical Description" (Page B521) if axial load differs from the conditions above, or when considering change in the deformation of the ball nut itself.

www.bergab.ru Берг АБ bergab@ya.ru Тел. (495)-228-06-21, факс (495) 223-3071

www.bergab.ru Берг АБ bergab@ya.ru Тел. (495)-228-06-21, факс (495) 223-3071

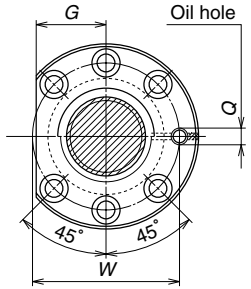

Circular shape II (semi-circular)

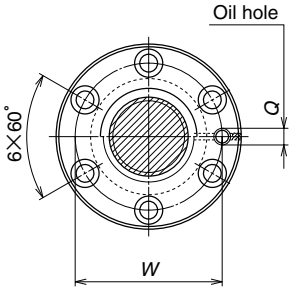

Circular shape I

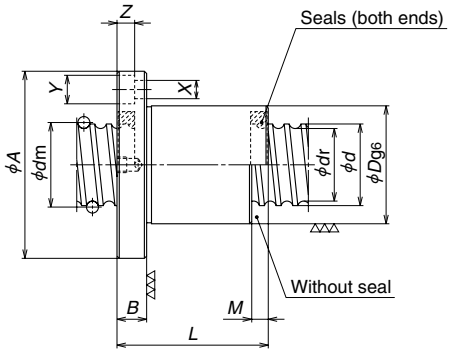

Unit: mm

Model No.	Shaft dia. d	Lead l	Ball dia. D_w	Ball circle dia. d_m	Root dia. d_r	Effective turns of balls Turns × Circuits	Basic load rating (N) Dynamic C_a	Static C_{0a}	Axial rigidity K (N/μm)	Ball nut dimensions D	A	G	B	L	M	W	X	Y	Z	Q
SFD 5005-4	50	5	3.175	50.75	47.4	1×4	17500	66800	593	66	100	38	15	55	5	82	9	14	8.5	Rc1/8
SFD 5005-6						1×6	24800	100000	872					65						
SFD 5006-4		6	3.969	51.0	46.9	1×4	23600	81700	598	66	100	38	15	64	6	82	9	14	8.5	Rc1/8
SFD 5006-6						1×6	33500	122000	892					76						
SFD 5008-4		8	4.762	51.25	46.3	1×4	29900	94800	598	70	112	43	18	79	8	90	11	17.5	11	Rc1/8
SFD 5008-6						1×6	42400	142000	887					96						
SFD 5010-3		10	6.35	51.75	45.1	1×3	34100	91600	461	72	114	44	18	83	10	92	11	17.5	11	Rc1/8
SFD 5010-4						1×4	43600	122000	608					93						
SFD 5010-6						1×6	61800	183000	902					114						
SFD 5012-3		12	7.938	52.25	44.0	1×3	44800	109000	461	75	121	47	22	99	12	97	14	20	13	Rc1/8
SFD 5012-4						1×4	57300	146000	608					111						
SFD 5020-3		20	7.938	52.25	44.0	1×3	44800	109000	461	75	121	47	28	146	20	97	14	20	13	Rc1/8
SFD 6306-4	63	6	3.969	64.0	59.9	1×4	26100	104000	735	80	122	47	18	67	6	100	11	17.5	11	Rc1/8
SFD 6306-6						1×6	36900	157000	1180					79						
SFD 6308-4		8	4.762	64.25	59.3	1×4	33600	124000	745	82	124	47	18	79	8	102	11	17.5	11	Rc1/8
SFD 6308-6						1×6	47600	186000	1100					96						
SFD 6310-4		10	6.35	64.75	58.1	1×4	49700	163000	764	85	131	50	22	97	10	107	14	20	13	Rc1/8
SFD 6310-6						1×6	70500	244000	1130					118						
SFD 6312-4		12	7.938	65.25	57.0	1×4	65100	191000	755	90	136	52	22	111	12	112	14	20	13	Rc1/8
SFD 6312-6						1×6	92200	286000	1110					136						
SFD 6320-3		20	9.525	65.75	56.0	1×3	83700	232000	735	95	153	59	28	146	20	123	18	26	17.5	Rc1/8
SFD 8010-4	80	10	6.35	81.75	75.1	1×4	55100	209000	931	105	151	57	22	97	10	127	14	20	13	Rc1/8
SFD 8010-6						1×6	78000	314000	1370					118						
SFD 8012-4		12	7.938	82.25	74.0	1×4	74000	254000	941	110	156	59	22	111	12	132	14	20	13	Rc1/8
SFD 8012-6						1×6	105000	381000	1392					136						
SFD 8020-3		20	9.525	82.75	73.0	1×3	96600	313000	931	115	173	66	28	146	20	143	18	26	17.5	Rc1/8
SFD 8020-4						1×4	124000	417000	1230					168						
SFD 10010-6	100	10	6.35	101.75	95.1	1×6	86200	401000	1670	125	171	64	22	118	10	147	14	20	13	Rc1/8
SFD 10012-6		12	7.938	102.25	94.0	1×6	117000	490000	1680	130	188	71	28	142	12	158	18	26	17.5	Rc1/8
SFD 10020-4		20	9.525	102.75	93.0	1×4	136000	526000	1470	135	205	79	32	172	20	169	22	32	21.5	Rc1/8

Remarks 1. Flange comes in Circular I and Circular II shape. Select a flange that is suitable for the nut installation space.
2. If there is no seal, the nut length is shorter by the length of "M" than those with a seal.
3. The right turn screw is standard. "L" is added to the end of the model code for the left turn screw.
4. Rigidity in the Table is theoretical value obtained from the elastic deformation between screw groove and ball when the axial load is 30% of the basic dynamic load rating (C_a). Refer to "Technical Description" (Page B521) if axial load differs from the conditions above, or when considering change in the deformation of the ball nut itself.

www.bergab.ru Берг АБ bergab@ya.ru Тел. (495)-228-06-21, факс (495) 223-3071

www.bergab.ru Берг АБ bergab@ya.ru Тел. (495)-228-06-21, факс (495) 223-3071

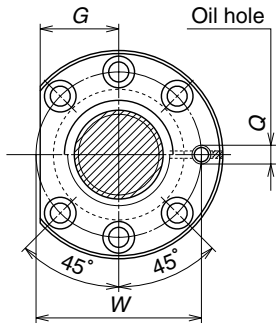

Circular shape II (semi-circular)

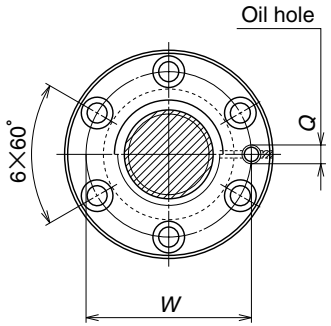

Circular shape I

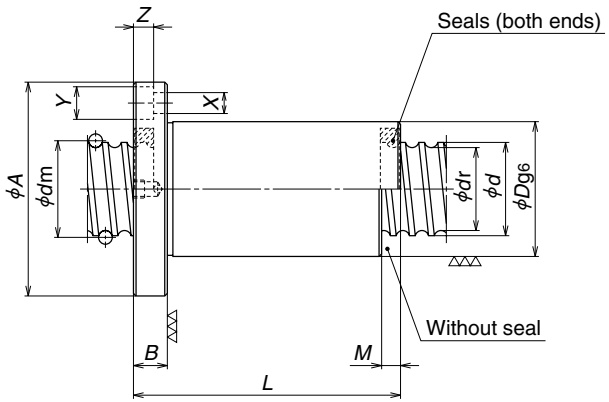

Unit: mm

Model No.	Shaft dia. d	Lead l	Ball dia. D_w	Ball circle dia. d_m	Root dia. d_r	Effective turns of balls Turns × Circuits	Basic load rating (N) Dynamic C_a	Static C_{0a}	Axial rigidity K (N/μm)	Ball nut dimensions D	A	G	B	L	M	W	X	Y	Z	Q
ZFD 2005-6	20	5	3.175	20.75	17.4	1×3	8620	17500	382	35	58	22.5	11	66	5	46	5.5	9.5	5.5	M6×1
ZFD 2006-6		6	3.969	21.0	16.9	1×3	11100	20600	382	35	58	22.5	11	76	6	46	5.5	9.5	5.5	M6×1
ZFD 2505-6	25	5	3.175	25.75	22.4	1×3	9790	22900	480	40	63	24	11	66	5	51	5.5	9.5	5.5	M6×1
ZFD 2506-6		6	3.969	26.0	21.9	1×3	12900	27300	470	40	63	24	11	76	6	51	5.5	9.5	5.5	M6×1
ZFD 2510-4		10	4.762	26.25	21.3	1×2	11400	21400	323	42	69	26	15	88	10	55	6.6	11	6.5	M6×1
ZFD 3205-6 **ZFD 3205-8**	32	5	3.175	32.75	29.4	1×3 1×4	11100 14200	30500 40700	598 784	48	75	29	12	67 77	5	61	6.6	11	6.5	M6×1
ZFD 3206-6 **ZFD 3206-8**		6	3.969	33.0	28.9	1×3 1×4	15000 19200	37500 49900	608 804	48	75	29	12	77 90	6	61	6.6	11	6.5	M6×1
ZFD 3208-6 **ZFD 3208-8**		8	4.762	33.25	28.3	1×3 1×4	18300 23500	41800 55800	588 774	50	84	32	15	99 116	8	66	9	14	8.5	M6×1
ZFD 3210-6		10	6.35	33.75	27.1	1×3	25900	52800	588	54	88	34	15	120	10	70	9	14	8.5	M6×1
ZFD 4005-8 **ZFD 4005-12**	40	5	3.175	40.75	37.4	1×4 1×6	15800 22400	52300 78400	960 1410	56	90	34	15	80 101	5	72	9	14	8.5	Rc1/8
ZFD 4006-8 **ZFD 4006-12**		6	3.969	41.0	36.9	1×4 1×6	21300 30100	63500 95300	970 1431	56	90	34	15	93 118	6	72	9	14	8.5	Rc1/8
ZFD 4008-8		8	4.762	41.25	36.3	1×4	27200	75200	990	60	94	36	15	116	8	76	9	14	8.5	Rc1/8
ZFD 4010-6 **ZFD 4010-8**		10	6.35	41.75	35.1	1×3 1×4	30000 38400	70000 93300	735 970	62	104	40	18	123 143	10	82	11	17.5	11	Rc1/8

Remarks 1. Flange comes in Circular I and Circular II shape. Select a flange that is suitable for the nut installation space.
2. If there is no seal, the nut length is shorter by the length of "M" than those with a seal.
3. The right turn screw is standard. "L" is added to the end of the model code for the left turn screw.
4. Rigidity in the Table is theoretical value obtained from the elastic deformation between screw groove and ball when the preload is 10% of the basic dynamic load rating (C_a), and axial load is applied to it. Refer to "Technical Description" (Page B521) if preload differs from the conditions above, or when considering change in the deformation of the ball nut itself.

www.bergab.ru Берг АБ bergab@ya.ru Тел. (495)-228-06-21, факс (495) 223-3071

www.bergab.ru Берг АБ bergab@ya.ru Тел. (495)-228-06-21, факс (495) 223-3071

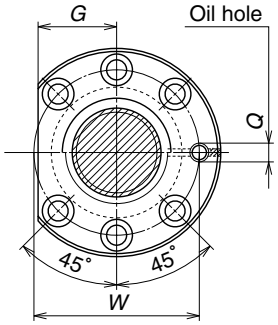

Circular shape II (semi-circular)

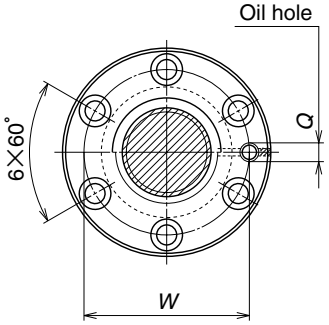

Circular shape I

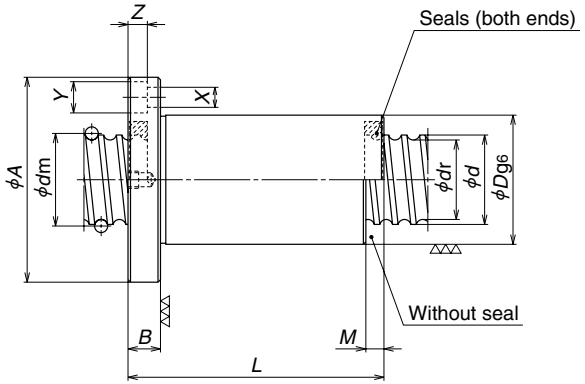

Unit: mm

Model No.	Shaft dia. d	Lead l	Ball dia. D_w	Ball circle dia. d_m	Root dia. d_r	Effective turns of balls Turns × Circuits	Basic load rating (N) Dynamic C_a	Static C_{0a}	Axial rigidity K (N/μm)	Ball nut dimensions D	A	G	B	L	M	W	X	Y	Z	Q
ZFD 5005-8 **ZFD 5005-12**	50	5	3.175	50.75	47.4	1×4 1×6	17500 24800	66800 100000	1170 1720	66	100	38	15	80 101	5	82	9	14	8.5	Rc1/8
ZFD 5006-8 **ZFD 5006-12**		6	3.969	51.0	46.9	1×4 1×6	23600 33500	81700 122000	1190 1750	66	100	38	15	93 118	6	82	9	14	8.5	Rc1/8
ZFD 5008-8		8	4.762	51.25	46.3	1×4	29900	94800	1180	70	112	43	18	119	8	90	11	17.5	11	Rc1/8
ZFD 5010-6 **ZFD 5010-8**		10	6.35	51.75	45.1	1×3 1×4	34100 43600	91600 122000	914 1200	72	114	44	18	123 143	10	92	11	17.5	11	Rc1/8
ZFD 5012-6		12	7.938	52.25	44.0	1×3	44800	109000	906	75	121	47	22	147	12	97	14	20	13	Rc1/8
ZFD 6306-8 **ZFD 6306-12**	63	6	3.969	64.0	59.9	1×4 1×6	26100 36900	104000 157000	1430 2110	80	122	47	18	96 121	6	100	11	17.5	11	Rc1/8
ZFD 6308-8		8	4.762	64.25	59.3	1×4	33600	124000	1460	82	124	47	18	119	8	102	11	17.5	11	Rc1/8
ZFD 6310-8		10	6.35	64.75	58.1	1×4	49700	163000	1510	85	131	50	22	147	10	107	14	20	13	Rc1/8
ZFD 6312-6		12	7.938	65.25	57.0	1×3	50800	143000	1120	90	136	52	22	147	12	112	14	20	13	Rc1/8

Remarks 1. Flange comes in Circular I and Circular II shape. Select a flange that is suitable for the nut installation space.
2. If there is no seal, the nut length is shorter by the length of "M" than those with a seal.
3. The right turn screw is standard. "L" is added to the end of the model code for the left turn screw.
4. Rigidity in the Table is theoretical value obtained from the elastic deformation between screw groove and ball when the preload is 10% of the basic dynamic load rating (C_a), and axial load is applied to it. Refer to "Technical Description" (Page B521) if preload differs from the conditions above, or when considering change in the deformation of the ball nut itself.

www.bergab.ru Берг АБ bergab@ya.ru Тел. (495)-228-06-21, факс (495) 223-3071

www.bergab.ru Берг АБ bergab@ya.ru Тел. (495)-228-06-21, факс (495) 223-3071

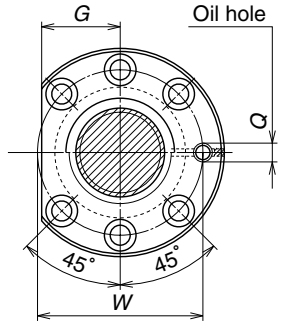

Circular shape II (semi-circular)

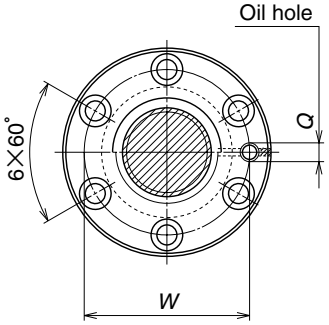

Circular shape I

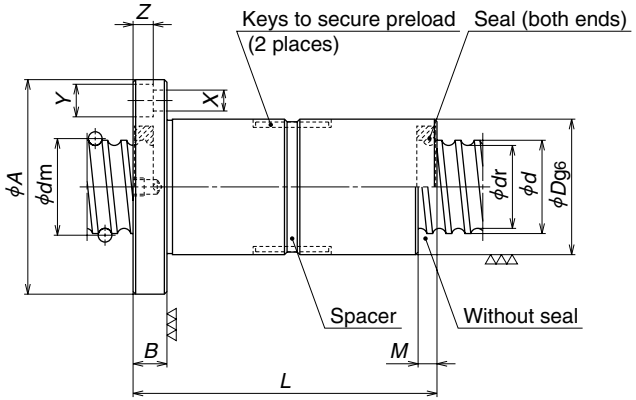

Unit: mm

Model No.	Shaft dia. d	Lead l	Ball dia. D_w	Ball circle dia. d_m	Root dia. d_r	Effective turns of balls Turns × Circuits	Basic load rating (N) Dynamic C_a	Static C_{0a}	Axial rigidity K (N/μm)	Ball nut dimensions D	A	G	B	L	M	W	X	Y	Z	Q
DFD 2005-3 **DFD 2005-4**	20	5	3.175	20.75	17.4	1×3 1×4	8620 11000	17500 23300	386 509	41	64	25	11	81 91	5	52	5.5	9.5	5.5	M6×1
DFD 2006-3 **DFD 2006-4**		6	3.969	21.0	16.9	1×3 1×4	11100 14300	20600 27500	378 498	42	65	25	11	92 108	6	53	5.5	9.5	5.5	M6×1
DFD 2505-3 **DFD 2505-4**	25	5	3.175	25.75	22.4	1×3 1×4	9790 12500	22900 30500	479 630	46	69	26	11	81 91	5	57	5.5	9.5	5.5	M6×1
DFD 2506-3 **DFD 2506-4**		6	3.969	26.0	21.9	1×3 1×4	12900 16500	27300 36500	475 626	47	70	27	11	92 108	6	58	5.5	9.5	5.5	M6×1
DFD 2510-3		10	4.762	26.25	21.3	1×3	16100	32000	479	47	74	28	15	140	10	60	6.6	11	6.5	M6×1
DFD 3205-3 **DFD 3205-4** **DFD 3205-6**	32	5	3.175	32.75	29.4	1×3 1×4 1×6	11100 14200 20200	30500 40700 61000	600 784 1160	53	80	30	12	82 92 112	5	66	6.6	11	6.5	M6×1
DFD 3206-3 **DFD 3206-4** **DFD 3206-6**		6	3.969	33.0	28.9	1×3 1×4 1×6	15000 19200 27200	37500 49900 74900	613 806 1190	54	81	31	12	93 109 133	6	67	6.6	11	6.5	M6×1
DFD 3208-3 **DFD 3208-4**		8	4.762	33.25	28.3	1×3 1×4	18300 23500	41800 55800	591 777	54	88	34	15	116 134	8	70	9	14	8.5	M6×1
DFD 3210-3 **DFD 3210-4**		10	6.35	33.75	27.1	1×3 1×4	25900 33200	52800 70300	587 773	54	88	34	15	140 160	10	70	9	14	8.5	M6×1
DFD 4005-4 **DFD 4005-6**	40	5	3.175	40.75	37.4	1×4 1×6	15800 22400	52300 78400	962 1410	62	96	37	15	95 115	5	78	9	14	8.5	Rc1/8
DFD 4006-4 **DFD 4006-6**		6	3.969	41.0	36.9	1×4 1×6	21300 30100	63500 95300	973 1430	62	96	37	15	112 136	6	78	9	14	8.5	Rc1/8
DFD 4008-4 **DFD 4008-6**		8	4.762	41.25	36.3	1×4 1×6	27200 38500	75200 113000	989 1460	62	96	37	15	134 168	8	78	9	14	8.5	Rc1/8
DFD 4010-3 **DFD 4010-4**		10	6.35	41.75	35.1	1×3 1×4	30000 38400	70000 93300	738 970	62	104	40	18	143 163	10	82	11	17.5	11	Rc1/8

Remarks 1. Flanges for the shaft diameter of 16 mm and smaller are rectangular. There are Circular I and Circular II for those with 20 mm and larger.
Select a flange shape which is suitable for the nut installation space.
2. If there is no seal, the nut length is shorter by the size of "M" than those with a seal.
3. The right turn screw is standard. "L" is added to the end of the model code for the left turn screw.
4. Rigidity in the Table is theoretical value obtained from the elastic deformation between screw groove and ball when the preload is 10% of the basic dynamic load rating (C_a), and axial load is applied to it. Refer to "Technical Description" (Page B521) if preload differs from the conditions above, or when considering change in the deformation of the ball nut itself.

www.bergab.ru Берг АБ bergab@ya.ru Тел. (495)-228-06-21, факс (495) 223-3071

www.bergab.ru Берг АБ bergab@ya.ru Тел. (495)-228-06-21, факс (495) 223-3071

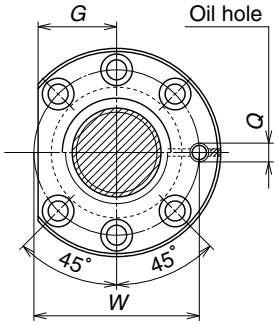

Circular shape II (semi-circular)

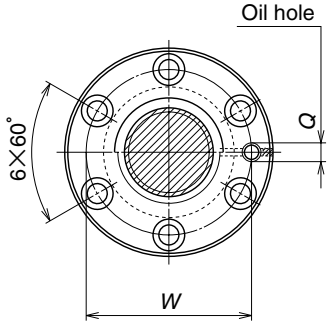

Circular shape I

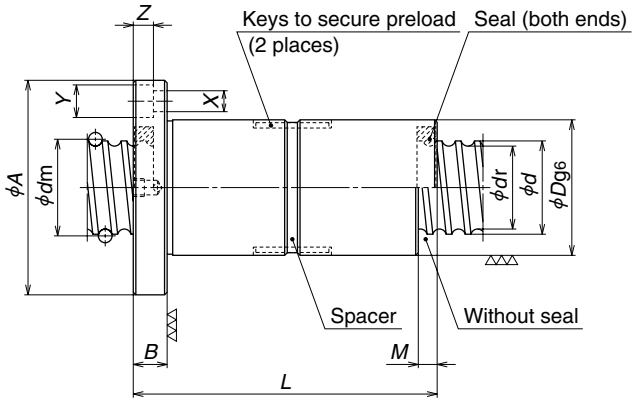

Unit: mm

Model No.	Shaft dia. d	Lead l	Ball dia. D_w	Ball circle dia. d_m	Root dia. d_r	Effective turns of balls Turns × Circuits	Basic load rating (N) Dynamic C_a	Static C_{0a}	Axial rigidity K (N/μm)	Ball nut dimensions D	A	G	B	L	M	W	X	Y	Z	Q
DFD 5005-4	50	5	3.175	50.75	47.4	1×4	17500	66800	1170	72	106	40	15	95	5	88	9	14	8.5	Rc1/8
DFD 5005-6						1×6	24800	100000	1720					115						
DFD 5006-4		6	3.969	51.0	46.9	1×4	23600	81700	1190	72	106	40	15	112	6	88	9	14	8.5	Rc1/8
DFD 5006-6						1×6	33500	122000	1750					136						
DFD 5008-4		8	4.762	51.25	46.3	1×4	29900	94800	1180	72	114	44	18	137	8	92	11	17.5	11	Rc1/8
DFD 5008-6						1×6	42400	142000	1740					171						
DFD 5010-3		10	6.35	51.75	45.1	1×3	34100	91600	914	72	114	44	18	143	10	92	11	17.5	11	Rc1/8
DFD 5010-4						1×4	43600	122000	1200					163						
DFD 5010-6						1×6	61800	183000	1770					205						
DFD 5012-3		12	7.938	52.25	44.0	1×3	44800	109000	906	75	121	47	22	171	12	97	14	20	13	Rc1/8
DFD 5012-4						1×4	57300	146000	1200					195						
DFD 5020-3		20	7.938	52.25	44.0	1×3	44800	109000	908	75	121	47	28	253	20	97	14	20	13	Rc1/8
DFD 6306-4	63	6	3.969	64.0	59.9	1×4	26100	104000	1430	85	127	48	18	118	6	105	11	17.5	11	Rc1/8
DFD 6306-6						1×6	36900	157000	2110					142						
DFD 6308-4		8	4.762	64.25	59.3	1×4	33600	124000	1460	85	127	48	18	141	8	105	11	17.5	11	Rc1/8
DFD 6308-6						1×6	47600	186000	2150					175						
DFD 6310-4		10	6.35	64.75	58.1	1×4	49700	163000	1510	85	131	50	22	172	10	107	14	20	13	Rc1/8
DFD 6310-6						1×6	70500	244000	2210					214						
DFD 6312-4		12	7.938	65.25	57.0	1×4	65100	191000	1480	90	136	52	22	195	12	112	14	20	13	Rc1/8
DFD 6312-6						1×6	92200	286000	2180					248						
DFD 6320-3		20	9.525	65.75	56.0	1×3	83700	232000	1440	95	153	59	28	253	20	123	18	26	17.5	Rc1/8
DFD 8010-4	80	10	6.35	81.75	75.1	1×4	55100	209000	1840	105	151	57	22	172	10	127	14	20	13	Rc1/8
DFD 8010-6						1×6	78000	314000	2710					214						
DFD 8012-4		12	7.938	82.25	74.0	1×4	74000	254000	1860	110	156	59	22	195	12	132	14	20	13	Rc1/8
DFD 8012-6						1×6	105000	381000	2730					248						
DFD 8020-3		20	9.525	82.75	73.0	1×3	96600	313000	1830	115	173	66	28	253	20	143	18	26	17.5	Rc1/8
DFD 8020-4						1×4	124000	417000	2410					297						
DFD 10010-6	100	10	6.35	101.75	95.1	1×6	86200	401000	3270	125	171	64	22	214	10	147	14	20	13	Rc1/8
DFD 10012-6		12	7.938	102.25	94.0	1×6	117000	490000	3320	130	188	71	28	254	12	158	18	26	17.5	Rc1/8
DFD 10020-4		20	9.525	102.75	93.0	1×4	136000	526000	2890	135	205	79	32	301	20	169	22	32	21.5	Rc1/8

Remarks 1. Flange comes in Circular I and Circular II shape. Select a flange that is suitable for the nut installation space.
2. If there is no seal, the nut length is shorter by the length of "M" than those with a seal.
3. The right turn screw is standard. "L" is added to the end of the model code for the left turn screw.
4. Rigidity in the Table is theoretical value obtained from the elastic deformation between screw groove and ball when the preload is 10% of the basic dynamic load rating (C_a), and axial load is applied to it. Refer to "Technical Description" (Page B521) if preload differs from the conditions above, or when considering change in the deformation of the ball nut itself.

www.bergab.ru Берг АБ bergab@ya.ru Тел. (495)-228-06-21, факс (495) 223-3071

www.bergab.ru Берг АБ bergab@ya.ru Тел. (495)-228-06-21, факс (495) 223-3071

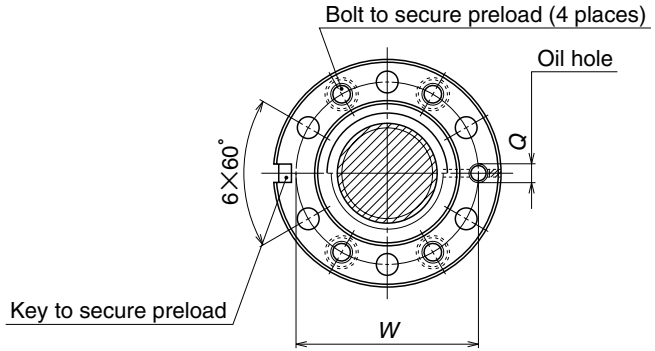

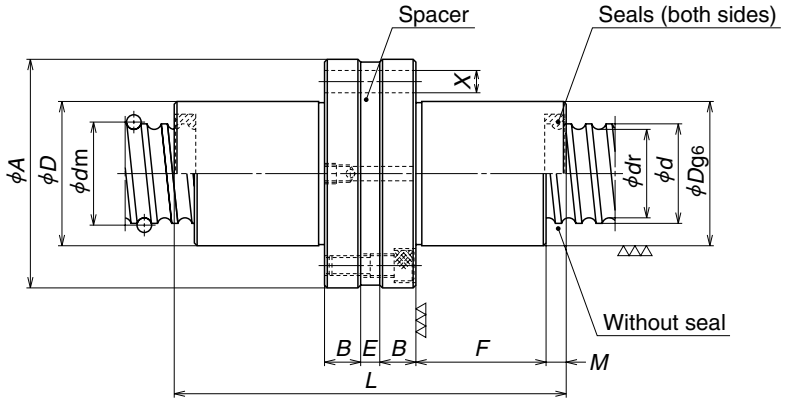

Unit: mm

Model No.	Shaft dia. d	Lead l	Ball dia. D_w	Ball circle dia. d_m	Root dia. d_r	Effective turns of balls: Turns × Circuits	Basic load rating (N) Dynamic C_a	Basic load rating (N) Static C_{0a}	Axial rigidity K (N/μm)	Ball nut dimensions D	A	B	F	E	L	M	W	X	Q
DFFD 2005-3	20	5	3.175	20.75	17.4	1×3	8620	17500	386	35	58	11	30	8	100	5	46	5.5	M6×1
DFFD 2005-4						1×4	11000	23300	509				35		110				
DFFD 2006-3		6	3.969	21.0	16.9	1×3	11100	20600	378	35	58	11	35	7	111	6	46	5.5	M6×1
DFFD 2006-4						1×4	14300	27500	498				43		127				
DFFD 2505-3	25	5	3.175	25.75	22.4	1×3	9790	22900	479	40	63	11	30	8	100	5	51	5.5	M6×1
DFFD 2505-4						1×4	12500	30500	630				35		110				
DFFD 2506-3		6	3.969	26.0	21.9	1×3	12900	27300	475	40	63	11	35	7	111	6	51	5.5	M6×1
DFFD 2506-4						1×4	16500	36500	626				43		127				
DFFD 3205-3	32	5	3.175	32.75	29.4	1×3	11100	30500	600	48	75	12	30	6	100	5	61	6.6	M6×1
DFFD 3205-4						1×4	14200	40700	784				35		110				
DFFD 3205-6						1×6	20200	61000	1160				45		130				
DFFD 3206-3		6	3.969	33.0	28.9	1×3	15000	37500	613	48	75	12	35	5	111	6	61	6.6	M6×1
DFFD 3206-4						1×4	19200	49900	806				43		127				
DFFD 3206-6						1×6	27200	74900	1190				55		151				
DFFD 3208-3		8	4.762	33.25	28.3	1×3	18300	41800	591	50	84	15	44	5	139	8	66	9	M6×1
DFFD 3208-4						1×4	23500	55800	777				53		157				
DFFD 3210-3		10	6.35	33.75	27.1	1×3	25900	52800	587	54	88	15	55	5	165	10	70	9	M6×1
DFFD 3210-4						1×4	33200	70300	773				65		185				
DFFD 4005-4	40	5	3.175	40.75	37.4	1×4	15800	52300	962	56	90	15	35	5	115	5	72	9	Rc1/8
DFFD 4005-6						1×6	22400	78400	1410				45	5	135				
DFFD 4006-4		6	3.969	41.0	36.9	1×4	21300	63500	973	56	90	15	43	5	133	6	72	9	Rc1/8
DFFD 4006-6						1×6	30100	95300	1430				55	5	157				
DFFD 4008-4		8	4.762	41.25	36.3	1×4	27200	75200	989	60	94	15	53	5	157	8	76	9	Rc1/8
DFFD 4008-6						1×6	38500	113000	1460				70	5	191				
DFFD 4010-3		10	6.35	41.75	35.1	1×3	30000	70000	738	62	104	18	55	9	175	10	82	11	Rc1/8
DFFD 4010-4						1×4	38400	93300	972				65	9	195				

Remarks 1. If there is no seal, the nut length is shorter by the length of "2M" than those with a seal.
2. Right turn screw is standard. "L" is added to the end of the model code for left turn screw.

4. Rigidity in the Table is theoretical value obtained from the elastic deformation between screw groove and ball when the preload is 10% of the basic dynamic load rating (C_a), and axial load is applied to it. Refer to "Technical Description" (Page B521) if preload differs from the conditions above, or when considering change in the deformation of the ball nut itself.

www.bergab.ru Берг АБ bergab@ya.ru Тел. (495)-228-06-21, факс (495) 223-3071

www.bergab.ru Берг АБ bergab@ya.ru Тел. (495)-228-06-21, факс (495) 223-3071

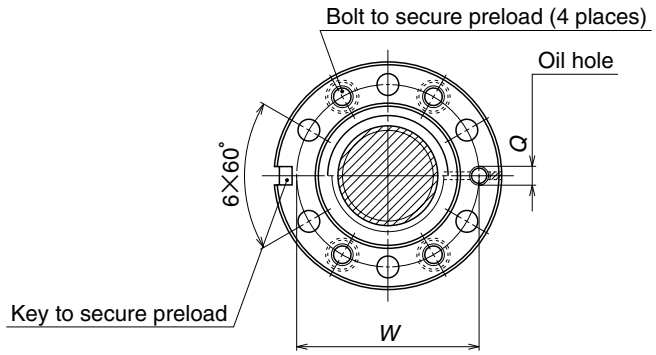

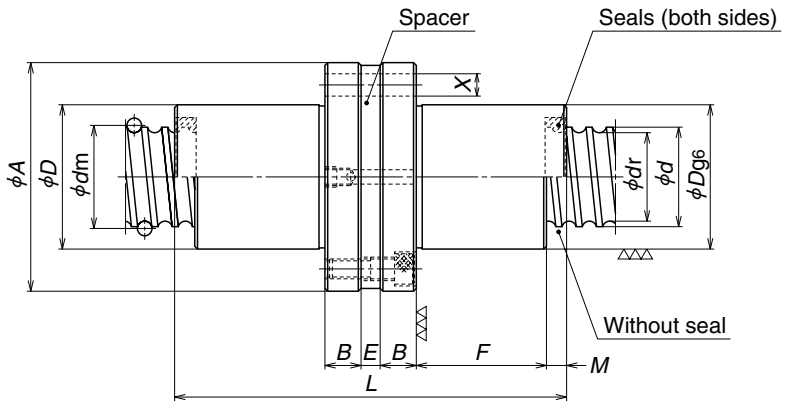

Unit: mm

Model No.	Shaft dia. d	Lead l	Ball dia. D_w	Ball circle dia. d_m	Root dia. d_r	Effective turns of balls Turns × Circuits	Basic load rating (N) Dynamic C_a	Static C_{0a}	Axial rigidity K (N/μm)	Ball nut dimensions D	A	B	F	E	L	M	W	X	Q
DFFD 5005-4	50	5	3.175	50.75	47.4	1×4	17500	66800	1170	66	100	15	35	5	115	5	82	9	Rc1/8
DFFD 5005-6						1×6	24800	100000	1720				45	5	135				
DFFD 5006-4		6	3.969	51.0	46.9	1×4	23600	81700	1190	66	100	15	43	8	136	6	82	9	Rc1/8
DFFD 5006-6						1×6	33500	122000	1750				55	8	160				
DFFD 5008-4		8	4.762	51.25	46.3	1×4	29900	94800	1180	70	112	18	53	7	165	8	90	11	Rc1/8
DFFD 5008-6						1×6	42400	142000	1740				70	7	199				
DFFD 5010-3		10	6.35	51.75	45.1	1×3	34100	91600	914	72	114	18	55	9	175	10	92	11	Rc1/8
DFFD 5010-4						1×4	43600	122000	1200				65	9	195				
DFFD 5010-6						1×6	61800	183000	1770				86	7	235				
DFFD 5012-3		12	7.938	52.25	44.0	1×3	44800	109000	906	75	121	22	65	5	203	12	97	14	Rc1/8
DFFD 5012-4						1×4	57300	146000	1200				77	5	227				
DFFD 6306-4	63	6	3.969	64.0	59.9	1×4	26100	104000	1430	80	122	18	43	8	142	6	100	11	Rc1/8
DFFD 6306-6						1×6	36900	157000	2110				55	8	166				
DFFD 6308-4		8	4.762	64.25	59.3	1×4	33600	124000	1460	82	124	18	53	7	165	8	102	11	Rc1/8
DFFD 6308-6						1×6	47600	186000	2150				70	7	199				
DFFD 6310-4		10	6.35	64.75	58.1	1×4	49700	163000	1510	85	131	22	65	11	205	10	107	14	Rc1/8
DFFD 6310-6						1×6	70500	244000	2210				86	9	245				
DFFD 6312-4		12	7.938	65.25	57.0	1×4	65100	191000	1480	90	136	22	77	8	230	12	112	14	Rc1/8
DFFD 6312-6						1×6	92200	286000	2180				102	8	280				
DFFD 8010-4	80	10	6.35	81.75	75.1	1×4	55100	209000	1840	105	151	22	65	11	205	10	127	14	Rc1/8
DFFD 8010-6						1×6	78000	314000	2710				86	9	245				
DFFD 8012-4		12	7.938	82.25	74.0	1×4	74000	254000	1860	110	156	22	77	8	230	12	132	14	Rc1/8
DFFD 8012-6						1×6	105000	381000	2730				102	8	280				
DFFD 8020-3		20	9.525	82.75	73.0	1×3	96600	313000	1830	115	173	28	98	9	301	20	143	18	Rc1/8
DFFD 8020-4						1×4	124000	417000	2410				120	10	346				
DFFD 10010-6	100	10	6.35	101.75	95.1	1×6	86200	401000	3270	125	171	22	86	9	245	10	147	14	Rc1/8
DFFD 10012-6		12	7.938	102.25	94.0	1×6	117000	490000	3320	130	188	28	102	8	292	12	158	18	Rc1/8
DFFD 10020-4		20	9.525	102.75	93.0	1×4	136000	526000	2890	135	205	32	120	12	356	20	169	22	Rc1/8

Remarks 1. If there is no seal, the nut length is shorter by the length of "2M" than those with a seal.
2. Right turn screw is standard. "L" is added to the end of the model code for left turn screw.

4. Rigidity in the Table is theoretical value obtained from the elastic deformation between screw groove and ball when the preload is 10% of the basic dynamic load rating (C_a), and axial load is applied to it. Refer to "Technical Description" (Page B521) if preload differs from the conditions above, or when considering change in the deformation of the ball nut itself.

www.bergab.ru Берг АБ bergab@ya.ru Тел. (495)-228-06-21, факс (495) 223-3071

www.bergab.ru Берг АБ bergab@ya.ru Тел. (495)-228-06-21, факс (495) 223-3071

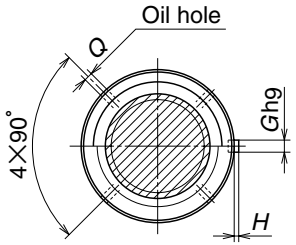

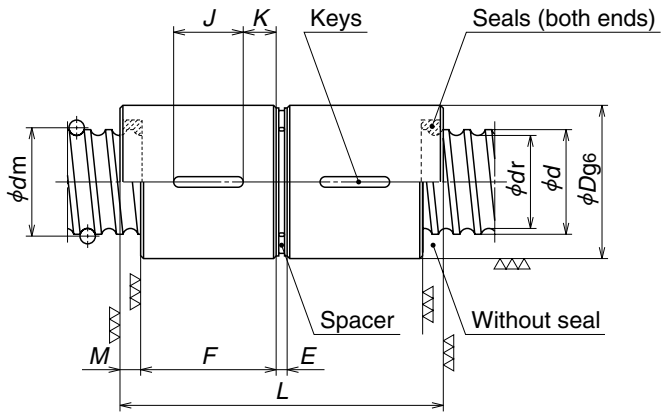

Unit: mm

Model No.	Shaft dia. d	Lead l	Ball dia. D_w	Ball circle dia. d_m	Root dia. d_r	Effective turns of balls Turns × Circuits	Basic load rating (N) Dynamic C_a	Static C_{0a}	Axial rigidity K (N/μm)	Ball nut dimensions D	F	E	L	M	J	K	G	H	Q
DCD 2005-3	20	5	3.175	20.75	17.4	1×3	8620	17500	386	35	30	5	75	5	20	5	4	1.5	3
DCD 2005-4						1×4	11000	23300	509		35		85		20	7.5			
DCD 2006-3		6	3.969	21.0	16.9	1×3	11100	20600	378	35	35	5	87	6	20	7.5	4	1.5	3
DCD 2006-4						1×4	14300	27500	498		43		103		25	9			
DCD 2505-3	25	5	3.175	25.75	22.4	1×3	9790	22900	479	40	30	5	75	5	20	5	4	1.5	3
DCD 2505-4						1×4	12500	30500	630		35		85		20	7.5			
DCD 2506-3		6	3.969	26.0	21.9	1×3	12900	27300	475	40	35	5	87	6	20	7.5	4	1.5	3
DCD 2506-4						1×4	16500	36500	626		43		103		25	9			
DCD 3205-3	32	5	3.175	32.75	29.4	1×3	11100	30500	600	48	30	5	75	5	20	5	4	1.5	3
DCD 3205-4						1×4	14200	40700	784		35		85		20	7.5			
DCD 3205-6						1×6	20200	61000	1160		45		105		25	10			
DCD 3206-3		6	3.969	33.0	28.9	1×3	15000	37500	613	48	35	5	87	6	20	7.5	4	1.5	3
DCD 3206-4						1×4	19200	49900	806		43		103		25	9			
DCD 3206-6						1×6	27200	74900	1190		55		127		25	13			
DCD 3208-3		8	4.762	33.25	28.3	1×3	18300	41800	591	50	44	5	109	8	25	9.5	5	2	3
DCD 3208-4						1×4	23500	55800	777		53		127		25	14			
DCD 3210-3		10	6.35	33.75	27.1	1×3	25900	52800	587	54	55	5	135	10	25	15	5	2	3
DCD 3210-4						1×4	33200	70300	773		65		155		32	16.5			
DCD 4005-4	40	5	3.175	40.75	37.4	1×4	15800	52300	962	56	35	5	85	5	20	7.5	5	2	3
DCD 4005-6						1×6	22400	78400	1410		45		105		25	10			
DCD 4006-4		6	3.969	41.0	36.9	1×4	21300	63500	973	56	43	5	103	6	25	9	5	2	3
DCD 4006-6						1×6	30100	95300	1430		55		127		25	13			
DCD 4008-4		8	4.762	41.25	36.3	1×4	27200	75200	989	60	53	5	127	8	25	14	5	2	3
DCD 4008-6						1×6	38500	113000	1460		70		161		32	19			
DCD 4010-3		10	6.35	41.75	35.1	1×3	30000	70000	738	62	55	5	135	10	25	15	5	2	3
DCD 4010-4						1×4	38400	93300	972		65		155		32	16.5			

Remarks 1. If there is no seal, the nut length is shorter by the length of "2M" than those with a seal.
2. Right turn screw is standard. "L" is added to the end of the model code for left turn screw.
3. Preload direction differs from that of other D preloaded items. The ball nuts are adjusted to a compressing preload. Apply a compressive load to the ball nuts when installing in the housing.
4. Rigidity in the Table is theoretical value obtained from the elastic deformation between screw groove and ball when the preload is 10% of the basic dynamic load rating (C_a), and axial load is applied to it. Refer to "Technical Description" (Page B521) if preload differs from the conditions above, or when considering change in the deformation of the ball nut itself.

www.bergab.ru Берг АБ bergab@ya.ru Тел. (495)-228-06-21, факс (495) 223-3071

www.bergab.ru Берг АБ bergab@ya.ru Тел. (495)-228-06-21, факс (495) 223-3071

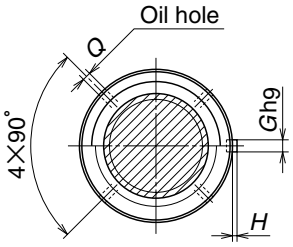

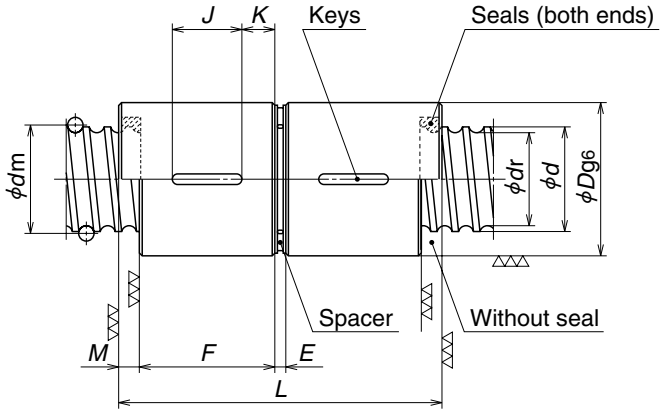

Unit: mm

Model No.	Shaft dia. d	Lead l	Ball dia. D_w	Ball circle dia. d_m	Root dia. d_r	Effective turns of balls Turns × Circuits	Basic load rating (N) Dynamic C_a	Static C_{0a}	Axial rigidity K (N/μm)	Ball nut dimensions D	F	E	L	M	J	K	G	H	Q
DCD 5005-4	50	5	3.175	50.75	47.4	1×4	17500	66800	1170	66	35	5	85	5	20	7.5	5	2	3
DCD 5005-6						1×6	24800	100000	1720		45		105	5	25	10			
DCD 5006-4		6	3.969	51.0	46.9	1×4	23600	81700	1190	66	43	5	103	6	25	9	5	2	3
DCD 5006-6						1×6	33500	122000	1750		55		127	6	25	13			
DCD 5008-4		8	4.762	51.25	46.3	1×4	29900	94800	1180	70	53	5	127	8	25	14	5	2	3
DCD 5008-6						1×6	42400	142000	1740		70		161	8	32	19			
DCD 5010-3		10	6.35	51.75	45.1	1×3	34100	91600	914	72	55	5	135	10	25	15	5	2	3
DCD 5010-4						1×4	43600	122000	1200		65		155	10	32	16.5			
DCD 5010-6						1×6	61800	183000	1770		86		197	10	40	23			
DCD 5012-3		12	7.938	52.25	44.0	1×3	44800	109000	906	75	65	7	161	12	32	16.5	5	2	4
DCD 5012-4						1×4	57300	146000	1200		77		185	12	40	18.5			
DCD 6306-4	63	6	3.969	64.0	59.9	1×4	26100	104000	1430	80	43	8	106	6	25	9	6	2.5	4
DCD 6306-6						1×6	36900	157000	2110		55		130	6	25	15			
DCD 6308-4		8	4.762	64.25	59.3	1×4	33600	124000	1460	82	53	9	131	8	25	14	6	2.5	4
DCD 6308-6						1×6	47600	186000	2150		70		165	8	32	19			
DCD 6310-4		10	6.35	64.75	58.1	1×4	49700	163000	1510	85	65	10	160	10	32	16.5	6	2.5	4
DCD 6310-6						1×6	70500	244000	2210		86		202	10	40	23			
DCD 6312-4		12	7.938	65.25	57.0	1×4	65100	191000	1480	90	77	7	185	12	40	18.5	6	2.5	4
DCD 6312-6						1×6	92200	286000	2180		102	10	238	12	40	31			
DCD 8010-4	80	10	6.35	81.75	75.1	1×4	55100	209000	1840	105	65	10	160	10	32	16.5	8	3	4
DCD 8010-6						1×6	78000	314000	2710		86		202	10	40	23			
DCD 8012-4		12	7.938	82.25	74.0	1×4	74000	254000	1860	110	77	7	185	12	40	18.5	8	3	4
DCD 8012-6						1×6	105000	381000	2730		102	10	238	12	40	31			
DCD 8020-3		20	9.525	82.75	73.0	1×3	96600	313000	1830	115	98	9	245	20	50	24	8	3	4
DCD 8020-4						1×4	124000	417000	2410		120		289	20	50	35			
DCD 10010-6	100	10	6.35	101.75	95.1	1×6	86200	401000	3270	125	86	10	202	10	40	23	8	3	4
DCD 10012-6		12	7.938	102.25	94.0	1×6	117000	490000	3320	130	102	10	238	12	40	31	10	3	4
DCD 10020-4		20	9.525	102.75	93.0	1×4	136000	526000	2890	135	120	9	289	20	50	35	10	3	4

Remarks 1. If there is no seal, the nut length is shorter by the length of "2M" than those with a seal.
2. Right turn screw is standard. "L" is added to the end of the model code for left turn screw.
3. Preload direction differs from that of other D preloaded items. The ball nuts are adjusted to a compressing preload. Apply a compressive load to the ball nuts when installing in the housing.
4. Rigidity in the Table is theoretical value obtained from the elastic deformation between screw groove and ball when the preload is 10% of the basic dynamic load rating (C_a), and axial load is applied to it. Refer to "Technical Description" (Page B521) if preload differs from the conditions above, or when considering change in the deformation of the ball nut itself.

www.bergab.ru Берг АБ bergab@ya.ru Тел. (495)-228-06-21, факс (495) 223-3071

www.bergab.ru Берг АБ bergab@ya.ru Тел. (495)-228-06-21, факс (495) 223-3071

B-I-7.3 M Type (Miniature · fine lead) Ball Screws

(1) Product categories

Like D Type, M Type ball screws use internal recirculation deflector type. There are several models by the difference in the preload system (Table I-7•3).

Table I-7•3 Product categories of M Type ball screws

Nut models	Shape	Flange shape	Preload system	Nut length	Page
MSFD		Flanged Circular III	Non-preload, Slight axial play	Short	B377
MPFD		Flanged Circular III	P preload (light preload), no spacer ball	Short	B377
MJFD	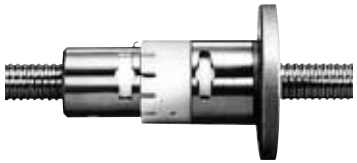	Flanged Circular III	J preload (spring preload) (medium preload)	Long	B381

(2) Features

● Internal recirculation system contributes to the compact nut outside diameter.

● Synthetic resin that shows superb characteristics against wear is used in the recirculation deflector, and has enhanced the smooth recirculation of balls. NSK has a patent for this product.

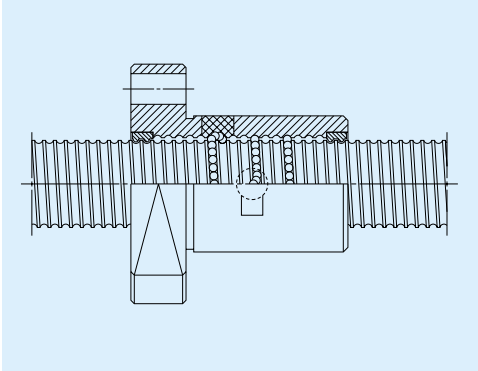

Fig. I-7•2 M type recirculation system

(3) Precaution in designing

◇ When designing the screw shaft end, please note that it is impossible to assemble the nut unless one end of the ball thread is cut through, and, unless this side of shaft end is smaller than the ball groove root diameter.

◇ When using nut model MJFD, it is recommended applying major external load to the direction as shown in Fig. I-7•3 in order to effectively use the characteristic of the constant pressure pre-load.

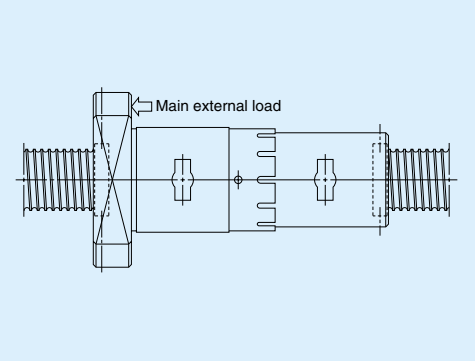

Fig. I-7•3 Constant pressure pre-load and major external load direction

(4) Model number

A model number that indicates specification factors is structured as shown below.

(example) Nut model MSFD; shaft diameter 4 mm; lead 1 mm; effective turns of balls 3

MSFD 04 01 – 3

- Nut model
- Screw shaft diameter (mm)
- Lead (mm)
- Effective turns of balls

www.bergab.ru Берг АБ bergab@ya.ru Тел. (495)-228-06-21, факс (495) 223-3071

www.bergab.ru Берг АБ bergab@ya.ru Тел. (495)-228-06-21, факс (495) 223-3071

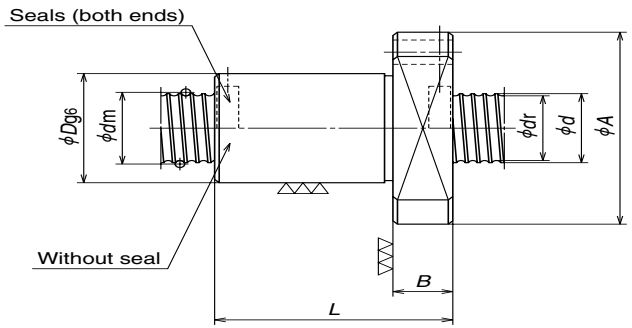

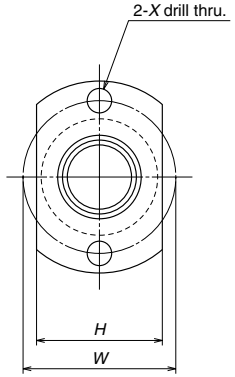

For 0.5mm lead

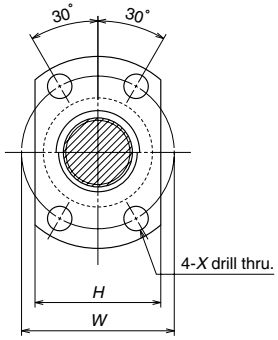

For 1mm lead or higher

Unit: mm

Model No.	Shaft dia. d	Lead l	Ball dia. D_w	Ball circle dia. d_m	Root dia. d_r	Effective turns of balls Turns × Circuits	Basic load rating (N) Dynamic C_a	Static C_{0a}	Axial rigidity K (N/μm)	Ball nut dimensions D	A	H	B	L	W	X
MSFD 0400.5-3 **MPFD 0400.5-3**	4	0.5	0.400	4.1	3.6	1×3	170	280	30 47	10	22	11	3	13	16	3.4
MSFD 0401-2 **MPFD 0401-2**		1	0.800	4.2	3.2	1×2	315	370	22 34	10	20	14	3	12	15	2.9
MSFD 0600.5-3 **MPFD 0600.5-3**	6	0.5	0.400	6.1	5.6	1×3	205	430	42 66	12	24	13	3	13	18	3.4
MSFD 0601-3 **MPFD 0601-3**		1	0.800	6.2	5.2	1×3	575	925	49 76	12	24	16	3.5	15	18	3.4
MSFD 0602-3 **MPFD 0602-3**		2	0.800	6.2	5.2	1×3	575	925	49 76	13	25	17	4	17	19	3.4
MSFD 0800.5-3 **MPFD 0800.5-3**	8	0.5	0.400	8.1	7.6	1×3	230	595	54 85	14	27	15	3	13	21	3.4
MSFD 0801-3 **MPFD 0801-3**		1	0.800	8.2	7.2	1×3	670	1290	64 99	14	27	18	4	16	21	3.4
MSFD 0801.5-3 **MPFD 0801.5-3**		1.5	1.000	8.3	7.0	1×3	1080	1980	76 117	15	28	19	4	22	22	3.4
MSFD 0802-3 **MPFD 0802-3**		2	1.200	8.3	6.9	1×3	1320	2210	73 113	16	29	20	4	26	23	3.4
MSFD 1001-3 **MPFD 1001-3**	10	1	0.800	10.2	9.2	1×3	745	1660	77 120	16	29	20	4	16	23	3.4
MSFD 1002-3 **MPFD 1002-3**		2	1.200	10.3	8.9	1×3	1490	2850	91 138	18	35	22	5	28	27	4.5
MSFD 1002.5-3 **MPFD 1002.5-3**		2.5	1.588	10.4	8.6	1×3	2130	3640	90 140	19	36	23	5	32	28	4.5

Remarks 1. Seal is not put on the lead is 1 mm or smaller, or if the shaft outer diameter is 6 mm or smaller. (Refer to Page B526 for dust protection.)
2. Right turn screw is standard. Please consult NSK for left turn screw.
3. For MSFD, rigidity in the Table is theoretical value when an axial load equivalent to 30% of the dynamic load rating (C_a) is applied. For MPFD, the rigidity is theoretical value when the axial load is applied and the preload is $0.05C_a$. Refer to "Technical Explanation" (Page B521) if axial load differs from the conditions above, or when considering change in the deformation of the ball nut itself.

www.bergab.ru Берг АБ bergab@ya.ru Тел. (495)-228-06-21, факс (495) 223-3071

www.bergab.ru Берг АБ bergab@ya.ru Тел. (495)-228-06-21, факс (495) 223-3071

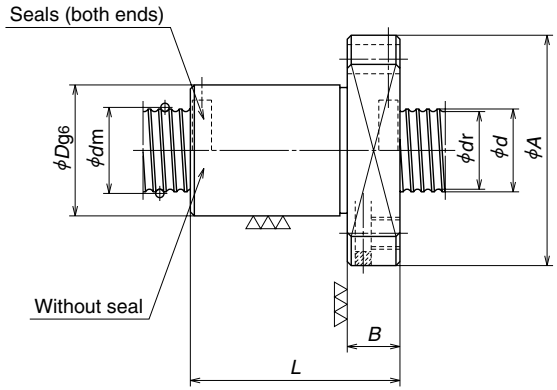

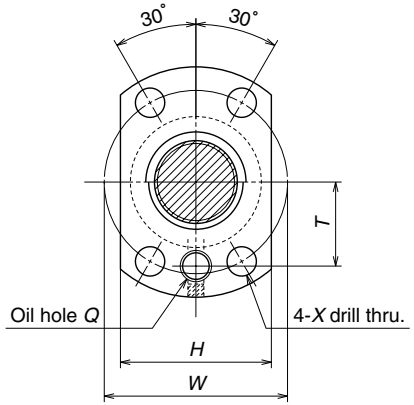

Unit: mm

Model No.	Shaft dia. d	Lead l	Ball dia. D_w	Ball circle dia. d_m	Root dia. d_r	Effective turns of balls Turns × Circuits	Basic load rating (N) Dynamic C_a	Static C_{0a}	Axial rigidity K (N/μm)	Ball nut dimensions D	A	H	B	L	W	X	Q	T
MSFD 1201-3 **MPFD 1201-3**	12	1	0.800	12.2	11.2	1×3	795	1980	88 137	18	31	22	4	16	25	3.4	—	—
MSFD 1202-3 **MPFD 1202-3**		2	1.200	12.3	10.9	1×3	1660	3620	108 168	20	37	24	5	28	29	4.5	—	—
MSFD 1202.5-3 **MPFD 1202.5-3**		2.5	1.588	12.4	10.6	1×3	2360	4540	107 167	21	38	25	5	32	30	4.5	—	—
MSFD 1203-3 **MPFD 1203-3**		3	2.000	12.5	10.2	1×3	3120	5420	107 166	22	39	26	5	36	31	4.5	—	—
MSFD 1402-3 **MPFD 1402-3**	14	2	1.200	14.3	12.9	1×3	1780	4270	122 191	22	41	26	6	29	32	5.5	—	—
MSFD 1403-3 **MPFD 1403-3**		3	2.000	14.5	12.2	1×3	3400	6490	127 196	24	43	28	6	37	34	5.5	—	—
MSFD 1602-4 **MPFD 1602-4**	16	2	1.588	16.4	14.6	1×4	3510	8450	185 288	25	44	29	10	40	35	5.5	M6×1	16
MSFD 1602.5-4 **MPFD 1602.5-4**		2.5	1.588	16.4	14.6	1×4	3510	8450	185 288	25	44	29	10	44	35	5.5	M6×1	16
MSFD 2002-4 **MPFD 2002-4**	20	2	1.588	20.4	18.6	1×4	3910	10900	225 351	30	49	34	10	40	40	5.5	M6×1	18.5
MSFD 2502-4 **MPFD 2502-4**	25	2	1.588	25.4	23.6	1×4	4310	13900	273 425	36	55	40	10	40	46	5.5	M6×1	21.5
MSFD 3202-6 **MPFD 3202-6**	32	2	1.588	32.4	30.6	1×6	6790	27200	494 769	42	65	46	10	50	54	6.6	M6×1	26.5
MSFD 4002-6 **MPFD 4002-6**	40	2	1.588	40.4	38.6	1×6	7380	33900	588 916	51	74	55	10	50	63	6.6	M6×1	31

Remarks 1. Seal is not put on the lead is 1 mm or smaller. (Refer to Page B526 for dust protection.)
2. Those with shaft diameter of 14 mm or smaller do not have lubrication oil hole. It is recommended to use those with seal when shaft diameter is 16 mm or larger and have lubrication oil hole.
3. The right turn screw is standard. Please consult NSK for left turn screw.
4. For MSFD, rigidity in the Table is theoretical value when an axial load equivalent to 30% of the dynamic rating load (C_a) is applied. For MPFD, rigidity is theoretical value when an axial load is applied and the pre-load is $0.05C_a$. Refer to "Technical Description" (Page B521) if axial load differs from the conditions above, or when considering change in the deformation of the ball nut itself.

www.bergab.ru Берг АБ bergab@ya.ru Тел. (495)-228-06-21, факс (495) 223-3071

www.bergab.ru Берг АБ bergab@ya.ru Тел. (495)-228-06-21, факс (495) 223-3071

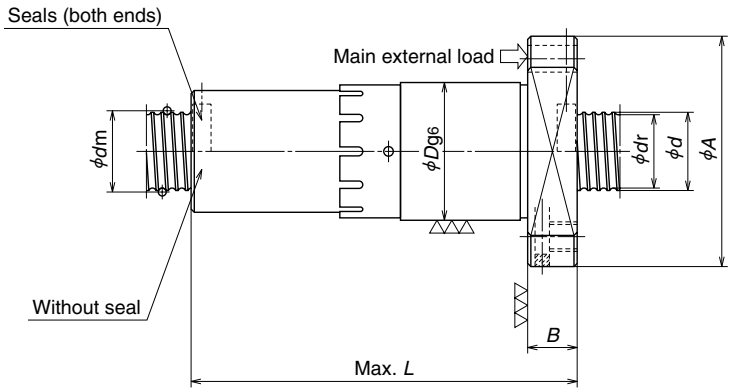

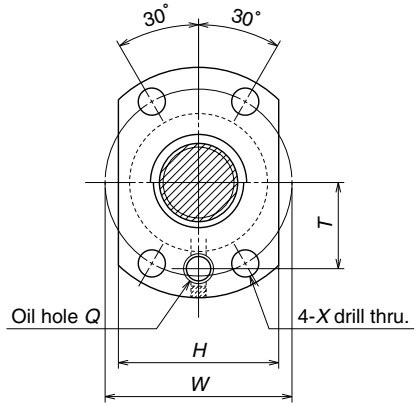

Unit: mm

Model No.	Shaft dia. d	Lead l	Ball dia. D_w	Ball circle dia. d_m	Root dia. d_r	Effective turns of balls Turns × Circuits	Basic load rating (N) Dynamic C_a	Static C_{0a}	Axial rigidity K (N/μm)	Ball nut dimensions D	A	H	B	L	W	X	Q	T
MJFD 0801.5-3	8	1.5	1.000	8.3	7	1×3	1080	1980	103	18	31	22	4	47	25	3.4	—	—
MJFD 1002-3	10	2	1.200	10.3	8.9	1×3	1490	2850	125	21	38	25	5	58	30	4.5	—	—
MJFD 1202-3	12	2	1.200	12.3	10.9	1×3	1660	3620	148	23	40	27	5	58	32	4.5	—	—
MJFD 1202.5-3		2.5	1.588	12.4	10.6	1×3	2360	4540	147	24	41	28	5	68	33	4.5	—	—
MJFD 1203-3		3	2.000	12.5	10.2	1×3	3120	5420	146	25	42	29	5	75	34	4.5	—	—
MJFD 1402-3	14	2	1.200	14.3	12.9	1×3	1780	4270	168	25	44	29	6	59	35	5.5	—	—
MJFD 1403-3		3	2.000	14.5	12.2	1×3	3400	6490	168	27	46	31	6	76	37	5.5	—	—
MJFD 1602-4	16	2	1.588	16.4	14.6	1×4	3510	8450	257	28	47	32	10	79	38	5.5	M6×1	17.5
MJFD 1602.5-4		2.5	1.588	16.4	14.6	1×4	3510	8450	257	28	47	32	10	87	38	5.5	M6×1	17.5
MJFD 2002-4	20	2	1.588	20.4	18.6	1×4	3910	10900	308	34	53	38	10	79	44	5.5	M6×1	20.5
MJFD 2502-4	25	2	1.588	25.4	23.6	1×4	4310	13900	373	40	59	44	10	80	50	5.5	M6×1	23.5
MJFD 3202-6	32	2	1.588	32.4	30.6	1×6	6790	27200	676	46	69	50	10	98	58	6.6	M6×1	28.5
MJFD 4002-6	40	2	1.588	40.4	38.6	1×6	7380	33900	805	56	79	60	10	98	68	6.6	M6×1	33.5

Remarks 1. Those under the shaft diameter of 14 mm do not have an oil hole. It is recommended to use those with seal when shaft diameter is 16 mm or larger and have the oil hole.
2. Right turn thread screw is standard. Please consult NSK for left turn screw.
3. Rigidity in the Table is theoretical value when the axial load of $0.30C_a$ is applied to the major external load (above figure), and the preload is $0.10C_a$. Consult NSK if preload differs from above condition.

www.bergab.ru Берг АБ bergab@ya.ru Тел. (495)-228-06-21, факс (495) 223-3071

www.bergab.ru Берг АБ bergab@ya.ru Тел. (495)-228-06-21, факс (495) 223-3071

B-I-7.4 L Type (Medium · high helix lead) Ball Screws

(1) Product categories

There are several L Type models by difference in the preload system (Table I-7•4). Since the leads are in the range from 1/2 to the same length of the shaft diameter (medium · high helix lead), L Type ball screws are suitable for high-speed operation.

Table I-7•4 Classification of L Type ball screws

Nut models	Shape	Flange shape	Nut shape	Recirculation system Preload system	Page
LSFT	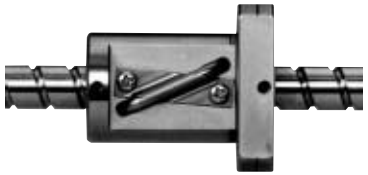	Flanged d=20 or under Rectangle d=25 or over Circular II	d=20 or under Circular d=25 or over Projecting-tube type	Return tube Non preloaded, slight axial play	B385
LPFT		Flanged d=20 or under Rectangle d=25 or over Circular II	d=20 or under Circular d=25 or over Projecting-tube type	Tube P preload (light preload) Spacer ball 1:1	B389
LDFT		Flanged Circular II	Circular	Return tube D preload (medium preload) (heavy preload)	B393
LFFT		Flanged to flanged Circular I	Projecting-tube type	Return tube D preload (medium preload) (heavy preload)	B395
LSFC		Flanged Circular III	Circular	End cap Non preloaded, slight axial play	B397
LPFC		Flanged Circular III	Circular	End cap P preload (light preload) No spacer ball	B397

(2) Accuracy

Grades of C1, C2, C3, C5, Ct7 are available.

* Please consult NSK for C0 grade.

(3) Precaution in designing

For end cap system, please note that it is impossible to assemble the nut unless one end of ball thread of screw shaft is cut through, and unless the shaft end of this side is smaller than the ball groove root diameter.

(4) Special ball screw specifications

L Series is based on the combinations of dimensional factors in the table. However, NSK manufactures other combinations, as well as flanges in special shapes. Please consult NSK.

(5) Model number

A model number that indicates specification factors is structured as shown below.

(Example) Nut model LSFT; shaft diameter 12 mm; lead 10 mm; effective turns of balls 2.5

LSFT 12 10 – 2.5

Nut model

Screw shaft diameter (mm)

Lead (mm)

Effective turns of balls

B 384

www.bergab.ru Берг АБ bergab@ya.ru Тел. (495)-228-06-21, факс (495) 223-3071

www.bergab.ru Берг АБ bergab@ya.ru Тел. (495)-228-06-21, факс (495) 223-3071

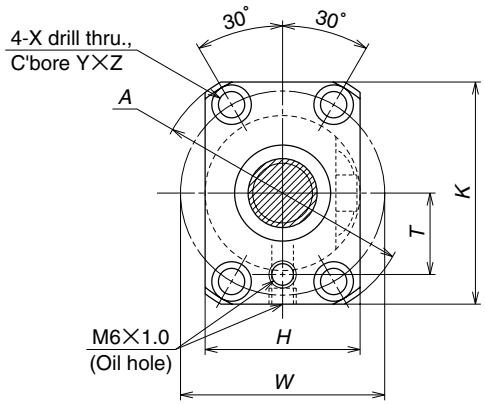

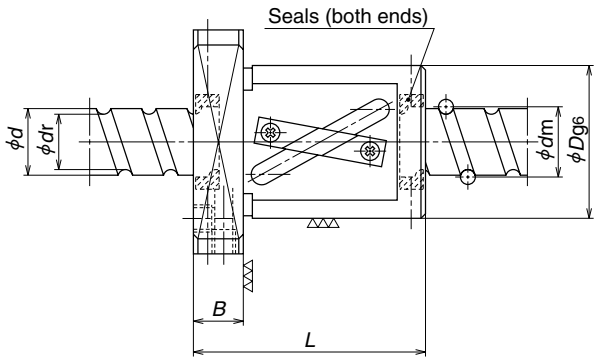

Unit: mm

Model No.	Shaft dia. d	Lead l	Ball dia. D_w	Ball circle dia. d_m	Root dia. d_r	Effective turns of balls Turns × Circuits	Basic load rating (N) Dynamic C_a	Static C_{0a}	Axial rigidity K (N/μm)	Ball nut dimensions D	A	H	K	B	L	W	X	Y	Z	T
LSFT 1210-2.5	12	10	2.381	12.5	10.0	2.5×1	3750	6480	110	30	50	32	45	10	50	40	4.5	8	4.5	15
LSFT 1408-2.5	14	8	3.175	14.5	11.2	2.5×1	6790	11700	140	34	57	34	50	11	46	45	5.5	9.5	5.5	17
LSFT 1510-2.5	15	10	3.175	15.5	12.2	2.5×1	7070	12800	150	34	57	34	50	11	51	45	5.5	9.5	5.5	17
LSFT 1616-1.5	16	16	3.175	16.75	13.4	1.5×1	4710	8110	100	40	63	40	55	12	56	51	5.5	9.5	5.5	17
LSFT 2010-2.5	20	10	3.969	21.0	16.9	2.5×1	10900	21700	202	46	74	46	66	13	54	59	6.6	11	6.5	24
LSFT 2016-2.5		16	3.969	21.0	16.9	2.5×1	10900	21700	202	46	74	46	66	13	72	59	6.6	11	6.5	24
LSFT 2020-1.5		20	3.969	21.0	16.9	1.5×1	7040	12700	127	46	74	46	66	13	63	59	6.6	11	6.5	24

Remarks 1. Ball screw with a shaft diameter of 12 mm has one lubrication oil hole on the flange surface.(position T).
2. Seal is standard. Outside dimensions does not change when the seal is removed.
3. Right turn screw is standard. "L" is added to the end of the model code for left turn screw.
4. Rigidity in the Table is theoretical value obtained from the elastic deformation between screw groove and ball when the axial load is 30% of the basic dynamic load rating (C_a). Refer to "Technical Description" (Page B521) if axial load differs from the conditions above, or when considering change in the deformation of the ball nut itself.

www.bergab.ru Берг АБ bergab@ya.ru Тел. (495)-228-06-21, факс (495) 223-3071

www.bergab.ru Берг АБ bergab@ya.ru Тел. (495)-228-06-21, факс (495) 223-3071

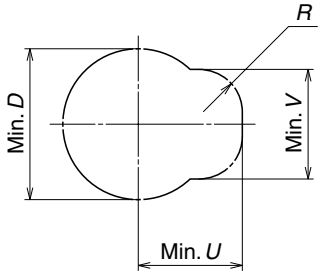

Housing hole and its clearance

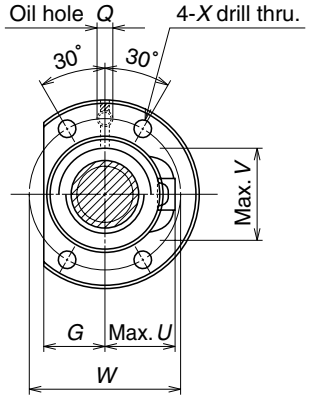

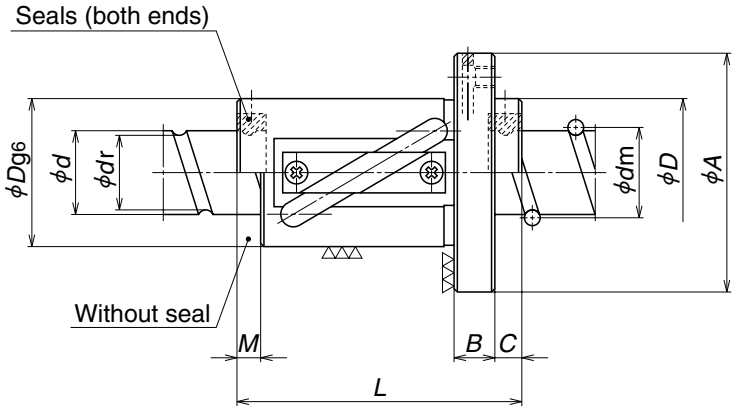

Unit: mm

Model No.	Shaft dia. d	Lead l	Ball dia. D_w	Ball circle dia. d_m	Root dia. d_r	Effective turns of balls Turns × Circuits	Basic load rating (N) Dynamic C_a	Static C_{0a}	Axial rigidity K (N/μm)	Ball nut dimensions D	A	G	B	C	L	M	W	X	U	V	R	Q
LSFT 2516-2.5 **LSFT 2516-3**	25	16	4.762	26.25	21.3	2.5×1 1.5×2	15700 18400	32800 38200	250 295	44	71	23	12	8	84 100	6	57	6.6	31	35	12	M6×1
LSFT 2520-2.5 **LSFT 2520-3**		20	4.762	26.25	21.3	2.5×1 1.5×2	15700 18400	32800 38200	250 295	44	71	23	12	8	96 116	7	57	6.6	31	35	12	M6×1
LSFT 2525-1.5		25	4.762	26.25	21.3	1.5×1	10100	19100	157	44	71	23	12	10	90	10	57	6.6	32	34	12	M6×1
LSFT 3220-2.5 **LSFT 3220-3**	32	20	4.762	33.25	28.3	2.5×1 1.5×2	17900 21000	41800 49600	300 360	51	85	26	15	8	99 119	7	67	9	34	42	12	M6×1
LSFT 3225-2.5 **LSFT 3225-3**		25	4.762	33.25	28.3	2.5×1 1.5×2	17900 21000	41800 49600	300 360	51	85	26	15	10	117 142	10	67	9	34	42	12	M6×1
LSFT 3232-1.5		32	4.762	33.25	28.3	1.5×1	11500	24800	190	51	85	26	15	12	109	13	67	9	34	42	12	M6×1
LSFT 4025-2.5 **LSFT 4025-3**	40	25	6.35	41.75	35.1	2.5×1 1.5×2	28500 33400	70000 82400	375 444	64	106	33	18	10	123 148	10	84	11	42	52	15	Rc1/8
LSFT 4032-2.5		32	6.35	41.75	35.1	2.5×1	28500	70000	375	64	106	33	18	12	146	13	84	11	42	52	15	Rc1/8
LSFT 4040-1.5		40	6.35	41.75	35.1	1.5×1	18400	41200	237	64	106	33	18	14	133	16	84	11	42	52	15	Rc1/8
LSFT 5025-2.5 **LSFT 5025-3**	50	25	7.938	52.25	44.0	2.5×1 1.5×2	42700 49900	109000 133000	462 547	80	126	41	22	11	129 154	11	102	14	52	64	19	Rc1/8
LSFT 5032-2.5 **LSFT 5032-3**		32	7.938	52.25	44.0	2.5×1 1.5×2	42700 49900	109000 133000	462 547	80	126	41	22	12	151 183	14	102	14	52	64	19	Rc1/8
LSFT 5040-2.5		40	7.938	52.25	44.0	2.5×1	42700	109000	462	80	126	41	22	14	178	17	102	14	52	64	19	Rc1/8
LSFT 5050-1.5		50	7.938	52.25	44.0	1.5×1	27500	66500	290	80	126	41	22	16	161	21	102	14	52	64	19	Rc1/8
LSFT 6340-2.5 **LSFT 6340-3**	63	40	7.938	65.25	57.0	2.5×1 1.5×2	48500 56800	139000 165000	560 667	97	144	49	22	14	178 218	15	120	14	58	77	19	Rc1/8
LSFT 6350-1.5 **LSFT 6350-2.5**		50	7.938	65.25	57.0	1.5×1 2.5×1	31300 48500	82500 139000	346 560	97	144	49	22	16	161 211	19	120	14	58	77	19	Rc1/8

Remarks 1. If there is no seal, the nut length is shorter by the lengths of "M" and "C" than those with a seal.
2. Right turn screw is standard. "L" is added to the end of the model code for left turn screw.

3. Rigidity in the Table is theoretical value obtained from the elastic deformation between screw groove and ball when the axial load is 30% of the basic dynamic load rating (C_a). Refer to "Technical Description" (Page B521) if axial load differs from the conditions above, or when considering change in the deformation of the ball nut itself.

www.bergab.ru Берг АБ bergab@ya.ru Тел. (495)-228-06-21, факс (495) 223-3071

www.bergab.ru Берг АБ bergab@ya.ru Тел. (495)-228-06-21, факс (495) 223-3071

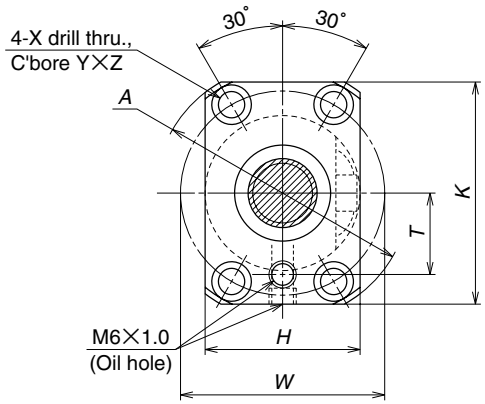

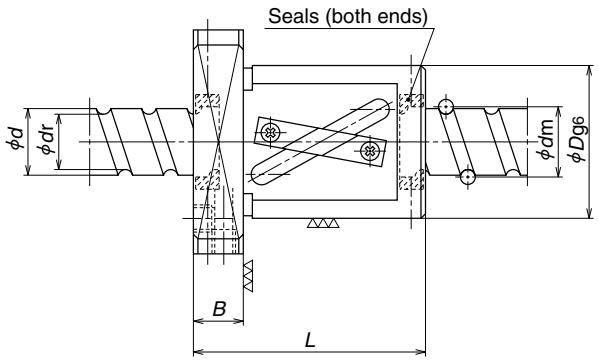

Unit: mm

Model No.	Shaft dia. d	Lead l	Ball dia. D_w	Ball circle dia. d_m	Root dia. d_r	Effective turns of balls Turns × Circuits	Basic load rating (N) Dynamic C_a	Static C_{0a}	Axial rigidity K (N/μm)	Ball nut dimensions D	A	H	K	B	L	W	X	Y	Z	T
LPFT 1210-2.5	12	10	2.381	12.5	10.0	2.5×1	2360	3240	90	30	50	32	45	10	50	40	4.5	8	4	15
LPFT 1408-2.5	14	8	3.175	14.5	11.2	2.5×1	4280	5840	120	34	57	34	50	11	46	45	5.5	9.5	5.5	17
LPFT 1510-2.5	15	10	3.175	15.5	12.2	2.5×1	4450	6380	127	34	57	34	50	11	51	45	5.5	9.5	5.5	17
LPFT 1616-1.5	16	16	3.175	16.75	13.4	1.5×1	3600	5410	110	40	63	40	55	12	56	51	5.5	9.5	5.5	17
LPFT 2010-2.5	20	10	3.969	21.0	16.9	2.5×1	6880	10800	169	46	74	46	66	13	54	59	6.6	11	6.5	24
LPFT 2016-2.5		16	3.969	21.0	16.9	2.5×1	6880	10800	169	46	74	46	66	13	72	59	6.6	11	6.5	24
LPFT 2020-1.5		20	3.969	21.0	16.9	1.5×1	5370	8450	137	46	74	46	66	13	63	59	6.6	11	6.5	24

Remarks 1. Ball screw with a shaft diameter of 12 mm has one lubrication oil hole on the flange surface.(position T).
2. Seal is standard. Outside dimensions does not change when the seal is removed.
3. Right turn screw is standard. "L" is added to the end of the model code for left turn screw.
4. Load balls and spacer balls are installed at a ratio of 1:1. Therefore, the basic load rating differs from those of other models.
5. Rigidity in the Table is theoretical value obtained from the elastic deformation between screw groove and ball when the preload is 5% of the basic dynamic load rating (C_a), and the axial load is applied to it. Refer to "Technical description" (Page B521) if preload differs from the conditions above, or when considering change in the deformation of the ball nut itself.

www.bergab.ru Берг АБ bergab@ya.ru Тел. (495)-228-06-21, факс (495) 223-3071

www.bergab.ru Берг АБ bergab@ya.ru Тел. (495)-228-06-21, факс (495) 223-3071

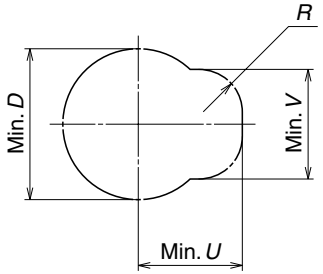

Housing hole and its clearance

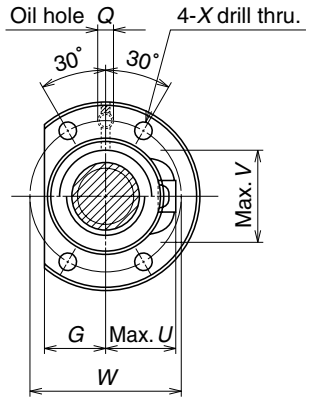

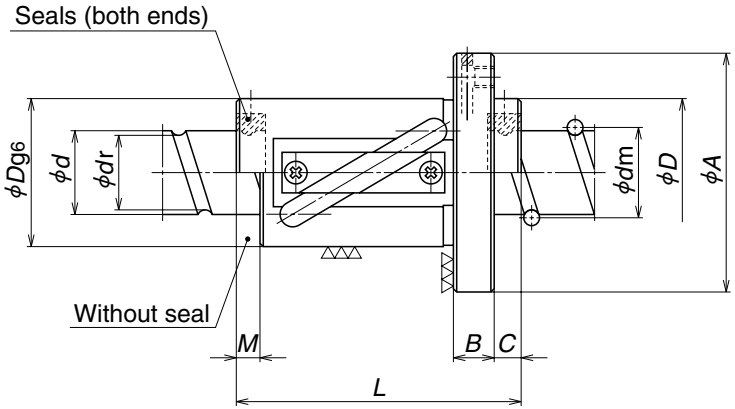

Unit: mm

Model No.	Shaft dia. d	Lead l	Ball dia. D_w	Ball circle dia. d_m	Root dia. d_r	Effective turns of balls Turns × Circuits	Basic load rating (N) Dynamic C_a	Basic load rating (N) Static C_{0a}	Axial rigidity K (N/μm)	Ball nut dimensions D	A	G	B	C	L	M	W	X	U	V	R	Q
LPFT 2516-2.5 **LPFT 2516-3**	25	16	4.762	26.25	21.3	2.5×1 1.5×2	9900 11600	16400 19100	210 247	44	71	23	12	8	84 100	6	57	6.6	31	35	12	M6×1
LPFT 2520-2.5 **LPFT 2520-3**		20	4.762	26.25	21.3	2.5×1 1.5×2	9900 11600	16400 19100	210 247	44	71	23	12	8	96 116	7	57	6.6	31	35	12	M6×1
LPFT 2525-1.5		25	4.762	26.25	21.3	1.5×1	6380	9540	127	44	71	23	12	10	90	10	57	6.6	32	34	12	M6×1
LPFT 3220-2.5 **LPFT 3220-3**	32	20	4.762	33.25	28.3	2.5×1 1.5×2	11300 13200	20900 24800	251 297	51	85	26	15	8	99 119	7	67	9	34	42	12	M6×1
LPFT 3225-2.5 **LPFT 3225-3**		25	4.762	33.25	28.3	2.5×1 1.5×2	11300 13200	20900 24800	251 297	51	85	26	15	10	117 142	10	67	9	34	42	12	M6×1
LPFT 3232-1.5		32	4.762	33.25	28.3	1.5×1	7280	12400	161	51	85	26	15	12	109	13	67	9	34	42	12	M6×1
LPFT 4025-2.5 **LPFT 4025-3**	40	25	6.35	41.75	35.1	2.5×1 1.5×2	18000 21000	35000 41200	315 347	64	106	33	18	10	123 148	10	84	11	42	52	15	Rc1/8
LPFT 4032-2.5		32	6.35	41.75	35.1	2.5×1	18000	35000	315	64	106	33	18	12	146	13	84	11	42	52	15	Rc1/8
LPFT 4040-1.5		40	6.35	41.75	35.1	1.5×1	11600	20600	199	64	106	33	18	14	133	16	84	11	42	52	15	Rc1/8
LPFT 5025-2.5 **LPFT 5025-3**	50	25	7.938	52.25	44.0	2.5×1 1.5×2	26900 31400	54700 66500	388 450	80	126	41	22	11	129 154	11	102	14	52	64	19	Rc1/8
LPFT 5032-2.5 **LPFT 5032-3**		32	7.938	52.25	44.0	2.5×1 1.5×2	26900 31400	54700 66500	388 450	80	126	41	22	12	151 183	14	102	14	52	64	19	Rc1/8
LPFT 5040-2.5		40	7.938	52.25	44.0	2.5×1	26900	54700	388	80	126	41	22	14	178	17	102	14	52	64	19	Rc1/8
LPFT 5050-1.5		50	7.938	52.25	44.0	1.5×1	17300	33200	245	80	126	41	22	16	161	21	102	14	52	64	19	Rc1/8
LPFT 6340-2.5 **LPFT 6340-3**	63	40	7.938	65.25	57.0	2.5×1 1.5×2	30600 35800	69500 82500	466 551	97	144	49	22	14	178 218	15	120	14	58	77	19	Rc1/8
LPFT 6350-1.5 **LPFT 6350-2.5**		50	7.938	65.25	57.0	1.5×1 2.5×1	19700 30600	41200 69500	285 478	97	144	49	22	16	161 211	19	120	14	58	77	19	Rc1/8

Remarks 1. If there is no seal, the nut length is shorter by the lengths of "M" and "C" than those with a seal.
2. Right turn screw is standard. "L" is added to the end of the model code for left turn screw.
3. Load balls and spacer balls are installed at a ratio of 1:1. Therefore, the basic load rating differs from those of other models.
4. Rigidity in the Table is theoretical value obtained from the elastic deformation between screw groove and ball when the preload is 5% of the basic dynamic load rating (C_a), and the axial load is applied to it. Refer to "Technical description" (Page B521) if preload differs from the conditions above, or when considering change in the deformation of the ball nut itself.

www.bergab.ru Берг АБ bergab@ya.ru Тел. (495)-228-06-21, факс (495) 223-3071

www.bergab.ru Берг АБ bergab@ya.ru Тел. (495)-228-06-21, факс (495) 223-3071

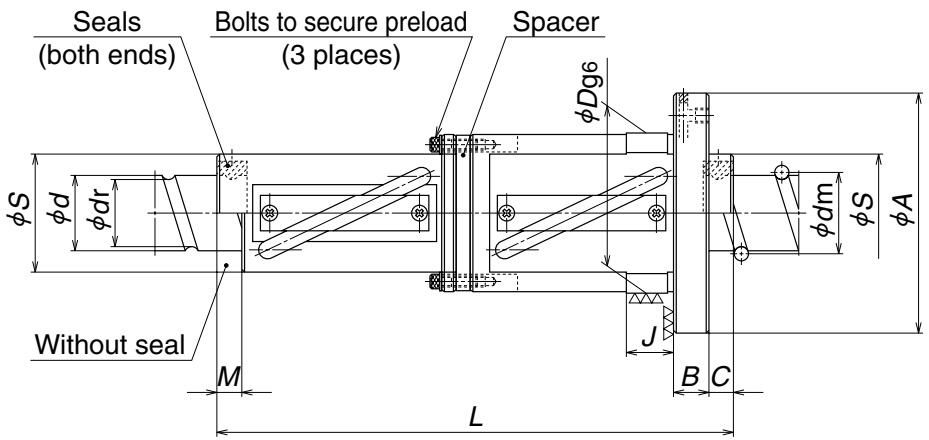

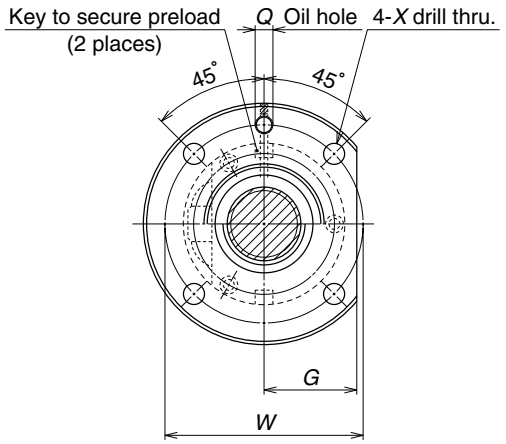

Unit: mm

Model No.	Shaft dia. d	Lead l	Ball dia. D_w	Ball circle dia. d_m	Root dia. d_r	Effective turns of balls Turns × Circuits	Basic load rating (N) Dynamic C_a	Static C_{0a}	Axial rigidity K (N/μm)	Ball nut dimensions D	A	S	G	B	J	L	C	M	W	X	Q
LDFT 2516-2.5	25	16	4.762	26.25	21.3	2.5×1	15700	32800	490	62	89	44	34	12	18	152	8	6	75	6.6	M6×1
LDFT 2516-3						1.5×2	18400	38200	577							181					
LDFT 2520-2.5		20	4.762	26.25	21.3	2.5×1	15700	32800	490	62	89	44	34	12	18	177	8	7	75	6.6	M6×1
LDFT 2520-3						1.5×2	18400	38200	577							217					
LDFT 2525-1.5		25	4.762	26.25	21.3	1.5×1	10100	19100	308	62	89	44	34	12	18	166	10	10	75	6.6	M6×1
LDFT 3220-2.5	32	20	4.762	33.25	28.3	2.5×1	17900	41800	604	68	102	51	39	15	20	179	8	7	84	9	M6×1
LDFT 3220-3						1.5×2	21000	49600	708							219					
LDFT 3225-2.5		25	4.762	33.25	28.3	2.5×1	17900	41800	604	68	102	51	39	15	20	218	10	10	84	9	M6×1
LDFT 3225-3						1.5×2	21000	49600	708							268					
LDFT 3232-1.5		32	4.762	33.25	28.3	1.5×1	11500	24800	376	68	102	51	39	15	20	205	12	13	84	9	M6×1
LDFT 4025-2.5	40	25	6.35	41.75	35.1	2.5×1	28500	70000	737	84	126	64	48	18	22	223	10	10	104	11	Rc1/8
LDFT 4025-3						1.5×2	33400	82400	873							273					
LDFT 4032-2.5		32	6.35	41.75	35.1	2.5×1	28500	70000	737	84	126	64	48	18	22	274	12	13	104	11	Rc1/8
LDFT 4040-1.5		40	6.35	41.75	35.1	1.5×1	18400	41200	465	84	126	64	48	18	22	253	14	16	104	11	Rc1/8
LDFT 5025-2.5	50	25	7.938	52.25	44.0	2.5×1	42700	109000	905	106	152	80	56	22	25	229	11	11	128	14	Rc1/8
LDFT 5025-3						1.5×2	49900	133000	1070							279					
LDFT 5032-2.5		32	7.938	52.25	44.0	2.5×1	42700	109000	905	106	152	80	56	22	25	279	12	14	128	14	Rc1/8
LDFT 5032-3						1.5×2	49900	133000	1070							343					
LDFT 5040-2.5		40	7.938	52.25	44.0	2.5×1	42700	109000	922	106	152	80	56	22	25	338	14	17	128	14	Rc1/8
LDFT 5050-1.5		50	7.938	52.25	44.0	1.5×1	27500	66500	572	106	152	80	56	22	25	312	16	21	128	14	Rc1/8
LDFT 6340-2.5	63	40	7.938	65.25	57.0	2.5×1	48500	139000	1100	122	168	97	62	22	29	339	14	15	144	14	Rc1/8
LDFT 6340-3						1.5×2	56800	165000	1310							419					
LDFT 6350-1.5		50	7.938	65.25	57.0	1.5×1	31300	82500	678	122	168	97	62	22	29	311	16	19	144	14	Rc1/8
LDFT 6350-2.5						2.5×1	48500	139000	1120							411					

Remarks 1. If there is no seal, the nut length is shorter by the lengths of "M" and "C" than those with a seal.
2. Right turn screw is standard. "L" is added to the end of the model code for left turn screw.

3. Rigidity in the Table is theoretical value obtained from the elastic deformation between screw groove and ball when the preload is 10% of the basic dynamic load rating (C_a), and the axial load is applied to it. Refer to "Technical description" (Page B521) if preload differs from the conditions above, or when considering change in the deformation of the ball nut itself.

www.bergab.ru Берг АБ bergab@ya.ru Тел. (495)-228-06-21, факс (495) 223-3071

www.bergab.ru Берг АБ bergab@ya.ru Тел. (495)-228-06-21, факс (495) 223-3071

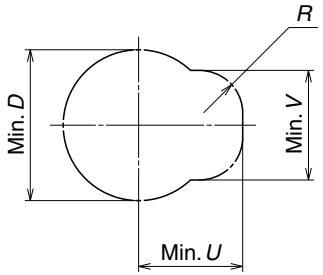

Housing hole and its clearance

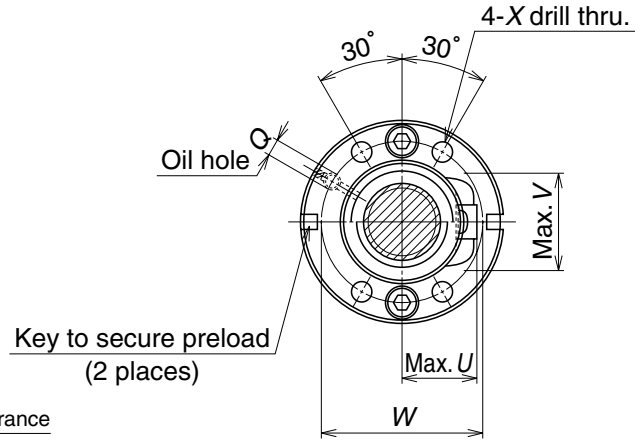

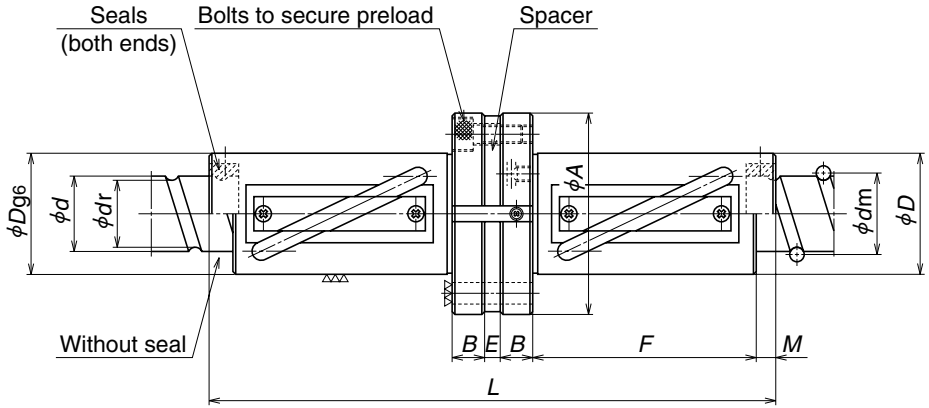

Unit: mm

Model No.	Shaft dia. d	Lead l	Ball dia. D_w	Ball circle dia. d_m	Root dia. d_r	Effective turns of balls Turns × Circuits	Basic load rating (N) Dynamic C_a	Static C_{0a}	Axial rigidity K (N/μm)	Ball nut dimensions D	A	B	F	E	L	M	W	X	U	V	R	Q
LFFT 2516-2.5 **LFFT 2516-3**	25	16	4.762	26.25	21.3	2.5×1 1.5×2	15700 18400	32800 38200	490 577	44	71	11	58 74	5	155 187	6	57	6.6	31	35	12	M6×1
LFFT 2520-2.5 **LFFT 2520-3**		20	4.762	26.25	21.3	2.5×1 1.5×2	15700 18400	32800 38200	490 577	44	71	11	74 94	5	189 229	7	57	6.6	31	35	12	M6×1
LFFT 2525-1.5		25	4.762	26.25	21.3	1.5×1	10100	19100	308	44	71	11	68	5	183	10	57	6.6	32	34	12	M6×1
LFFT 3220-2.5 **LFFT 3220-3**	32	20	4.762	33.25	28.3	2.5×1 1.5×2	17900 21000	41800 49600	604 708	51	85	13	71 91	7	189 229	7	67	9	34	42	12	M6×1
LFFT 3225-2.5 **LFFT 3225-3**		25	4.762	33.25	28.3	2.5×1 1.5×2	17900 21000	41800 49600	604 708	51	85	13	90 115	7	233 283	10	67	9	34	42	12	M6×1
LFFT 3232-1.5		32	4.762	33.25	28.3	1.5×1	11500	24800	376	51	85	13	69	6	196	13	67	9	34	42	12	M6×1
LFFT 4025-2.5 **LFFT 4025-3**	40	25	6.35	41.75	35.1	2.5×1 1.5×2	28500 33400	70000 82400	737 873	64	106	17	87 112	8	236 286	10	84	11	42	52	15	Rc1/8
LFFT 4032-2.5		32	6.35	41.75	35.1	2.5×1	28500	70000	737	64	106	17	114	8	296	13	84	11	42	52	15	Rc1/8
LFFT 4040-1.5		40	6.35	41.75	35.1	1.5×1	18400	41200	465	64	106	17	85	7	243	16	84	11	42	52	15	Rc1/8
LFFT 5025-2.5 **LFFT 5025-3**	50	25	7.938	52.25	44.0	2.5×1 1.5×2	42700 49900	109000 133000	905 1070	80	126	20	85 110	6	238 288	11	102	14	52	64	19	Rc1/8
LFFT 5032-2.5 **LFFT 5032-3**		32	7.938	52.25	44.0	2.5×1 1.5×2	42700 49900	109000 133000	905 1070	80	126	20	110 142	10	298 362	14	102	14	52	64	19	Rc1/8
LFFT 5040-2.5		40	7.938	52.25	44.0	2.5×1	42700	109000	922	80	126	18	125	6	326	17	102	14	52	64	19	Rc1/8
LFFT 5050-1.5		50	7.938	52.25	44.0	1.5×1	27500	66500	572	80	126	20	104	10	300	21	102	14	52	64	19	Rc1/8
LFFT 6340-2.5 **LFFT 6340-3**	63	40	7.938	65.25	57.0	2.5×1 1.5×2	48500 56800	139000 165000	1100 1310	97	144	18	127 167	6	326 406	15	120	14	58	77	19	Rc1/8
LFFT 6350-1.5 **LFFT 6350-2.5**		50	7.938	65.25	57.0	1.5×1 2.5×1	31300 48500	82500 139000	678 1120	97	144	20	105 155	12	300 400	19	120	14	58	77	19	Rc1/8

Remarks 1. If there is no seal, the nut length is shorter by the length of "2 x M" than those with a seal.
2. Right turn screw is standard. "L" is added to the end of the model code for left turn screw.

3. Rigidity in the Table is theoretical value obtained from the elastic deformation between screw groove and ball when the preload is 10% of the basic dynamic load rating (C_a), and the axial load is applied to it. Refer to "Technical description" (Page B521) if preload differs from the conditions above, or when considering change in the deformation of the ball nut itself.

www.bergab.ru Берг АБ bergab@ya.ru Тел. (495)-228-06-21, факс (495) 223-3071

www.bergab.ru Берг АБ bergab@ya.ru Тел. (495)-228-06-21, факс (495) 223-3071

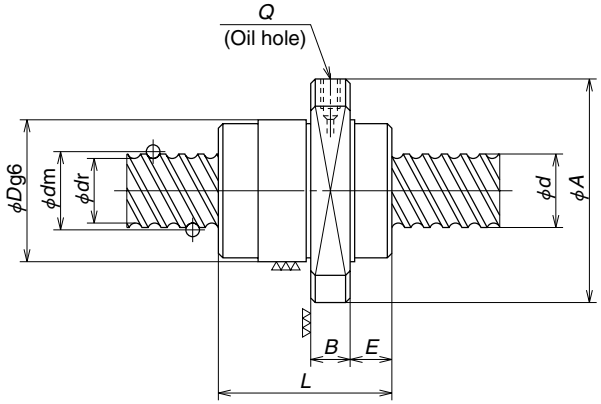

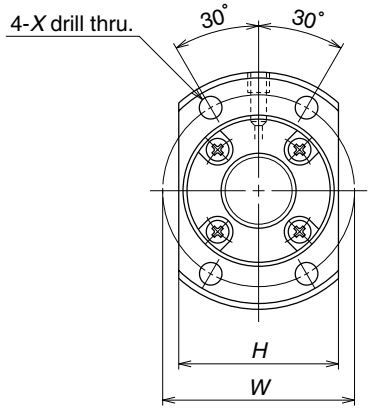

Unit: mm

Model No.	Shaft dia. d	Lead l	Ball dia. D_w	Ball circle dia. d_m	Root dia. d_r	Effective turns of balls Turns × Circuits	Basic load rating (N) Dynamic C_a	Static C_{0a}	Axial rigidity K (N/μm)	Ball nut dimensions D	A	H	B	E	L	W	X	Q
LSFC 1616-3 **LPFC 1616-3**	16	16	2.778	16.65	13.7	1.7×2	6380	12500	188 293	32	53	34	10	10	38	42	4.5	M6×1
LSFC 1616-6 **LPFC 1616-6**						1.7×4	11600	25000	365 567									
LSFC 2020-3 **LPFC 2020-3**	20	20	3.175	20.75	17.4	1.7×2	9620	21000	260 404	39	62	41	10	11.5	46	50	5.5	M6×1
LSFC 2020-6 **LPFC 2020-6**						1.7×4	17500	42000	505 784									
LSFC 2525-3 **LPFC 2525-3**	25	25	3.969	26.0	21.9	1.7×2	14400	32800	320 499	47	74	49	12	13	55	60	6.6	M6×1
LSFC 2525-6 **LPFC 2525-6**						1.7×4	26100	65600	620 965									
LSFC 3232-3 **LPFC 3232-3**	32	32	4.762	33.25	28.3	1.7×2	21000	51600	400 623	58	92	60	12	16	70	74	9	M6×1
LSFC 3232-6 **LPFC 3232-6**						1.7×4	38100	103000	775 1210									
LSFC 4040-3 **LPFC 4040-3**	40	40	6.35	41.75	35.2	1.7×2	33500	86500	497 773	73	114	75	15	19.5	85	93	11	M6×1
LSFC 4040-6 **LPFC 4040-6**						1.7×4	60800	173000	962 1500									
LSFC 5050-3 **LPFC 5050-3**	50	50	7.938	52.25	44.1	1.7×2	50000	135000	611 952	90	135	92	20	21.5	107	112	14	M6×1
LSFC 5050-6 **LPFC 5050-6**						1.7×4	90800	270000	1180 1840									

Remarks 1. For LSFC, rigidities in the Table are theoretical values obtained from the elastic deformation between screw groove and balls when the axial load is 30% of the dynamic load rating (Ca). For LPFC, rigidities are theoretical values when a preload is 5% of the dynamic load rating, and axial load is applied to it. Refer to "Technical Description" (Page B521) if axial load and preload differ from the conditions above, or when considering change in the deformation of the ball nut itself.
2. The right turn screw is standard. Please consult NSK for left turn screw.

www.bergab.ru Берг АБ bergab@ya.ru Тел. (495)-228-06-21, факс (495) 223-3071

www.bergab.ru Берг АБ bergab@ya.ru Тел. (495)-228-06-21, факс (495) 223-3071

B-I-7.5 U Type (High helix • ultra high helix lead) Ball Screws

(1) Product categories

U Type ball screws use end cap recirculation system. There are several models by difference in the preload system (Table I-7•5). Since the leads are in the range larger than 1.3 times of the screw shaft diameter, U Type is even more suitable than L Type for high-speed operation.

Table I-7•5 Classification of U Type ball screws

Nut models	Shape	Flange shape	Nut shape	Recirculation system Preload system	Page
USFC		Flanged Rectangle	Circular	End cap Non-pre-loaded, slight axial play	B401
UPFC		Flanged Rectangle	Circular	End cap P Preload (light load) No spacer ball	B401

(2) Features

● High-speed operation

The ratio of lead to screw shaft diameter is larger than 1. This is a quite suitable specification for high-speed feed. The lead with the ratio of three times or larger than screw shaft diameter (three-times lead) is particularly ideal for high-speed operation.

(Example) High-speed feed at 180 m/min.
Lead 50 mm → 3600 min^{-1}
60 mm → 3000 min^{-1}
80 mm → 2250 min^{-1}

● Low noise

The three-times lead significantly reduces noise more than the 2-times lead under the same traveling speed.

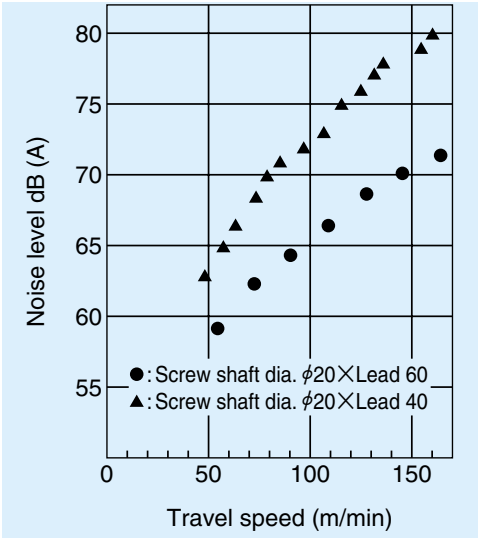

Fig. I-7•4 Noise levels by ultra high helix lead

(3) Accuracy grades

Three-times lead ····C5, Ct7 grades are available.
Other·····C3, C5, Ct7 grades are available.
※ Please consult NSK for C2 or higher grades.

(4) Precaution in designing shaft end

Please note that it is impossible to assemble nut unless one end of ball thread of screw shaft is cut through, and unless the shaft end of this side is smaller than the ball groove root diameter.

(5) Models number

A model number that indicates specification factors is structured as shown below.

(Example) Nut model USFC; shaft diameter 12 mm; lead 20 mm; effective turns of balls 1.5

USFC 12 20 – 1.5

Nut model
Screw shaft diameter (mm)
Lead (mm)
Effective turns of balls

www.bergab.ru Берг АБ bergab@ya.ru Тел. (495)-228-06-21, факс (495) 223-3071

www.bergab.ru Берг АБ bergab@ya.ru Тел. (495)-228-06-21, факс (495) 223-3071

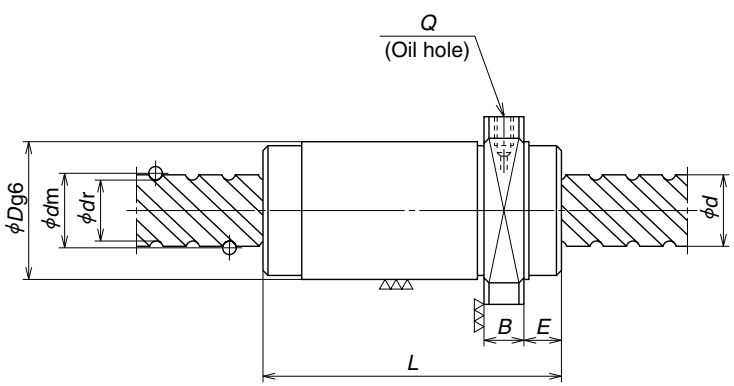

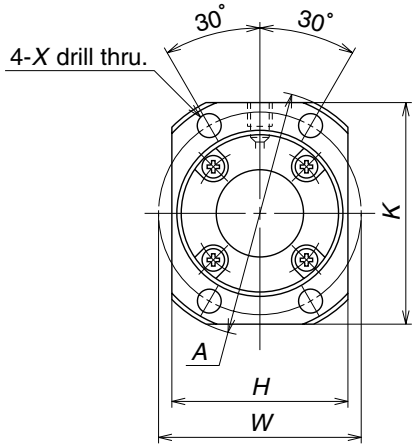

Unit: mm

Model No.	Shaft dia. d	Lead l	Ball dia. D_w	Ball circle dia. d_m	Root dia. d_r	Effective turns of balls Turns × Circuits	Basic load rating (N) Dynamic C_a	Static C_{0a}	Axial rigidity K (N/μm)	Ball nut dimensions D	A	H	K	B	E	L	W	X	Q
USFC 1220-1.5 **UPFC 1220-1.5**	12	20	2.381	12.5	9.9	1.7×1	2690	4420	83 129	26	44	28	40	10	9	44	35	4.5	M6×1
USFC 1520-1.5 **UPFC 1520-1.5**	15	20	3.175	15.5	12.2	1.7×1	5070	8730	113 176	34	55	36	50	10	11	45	45	5.5	M6×1
USFC 1540-1 **UPFC 1540-1**		40	3.175	15.75	12.2	0.7×2	3860	6050	105 163	32	53	33	48	10	12	40	43	5.5	M6×1
USFC 1540-2 **UPFC 1540-2**				15.75	12.2	0.7×4	7000	12100	203 315	32	53	33	48	10	12	40	43	5.5	M6×1
USFC 1632-1 **UPFC 1632-1**	16	32	3.175	16.75	13.4	0.7×2	4000	6690	102 159	34	55	36	50	10	10.5	34	45	5.5	M6×1
USFC 1632-3 **UPFC 1632-3**				16.75	13.4	1.7×2	8580	17000	240 374	34	55	36	50	10	10.5	66	45	5.5	M6×1
USFC 1632-6 **UPFC 1632-6**				16.75	13.4	1.7×4	15600	34100	466 725	34	55	36	50	10	10.5	66	45	5.5	M6×1
USFC 1650-1 **UPFC 1650-1**		50	3.175	16.75	13.4	0.7×2	4000	6690	124 194	34	55	36	50	10	12	50	45	5.5	M6×1
USFC 1650-2 **UPFC 1650-2**				16.75	13.4	0.7×4	7260	13400	240 374	34	55	36	50	10	12	50	45	5.5	M6×1
USFC 2040-1 **UPFC 2040-1**	20	40	3.175	20.75	17.4	0.7×2	4490	8640	122 191	38	58	40	52	10	11	41	48	5.5	M6×1
USFC 2040-3 **UPFC 2040-3**				20.75	17.4	1.7×2	9620	21000	290 451	38	58	40	52	10	11	81	48	5.5	M6×1
USFC 2040-6 **UPFC 2040-6**				20.75	17.4	1.7×4	17500	42000	562 875	38	58	40	52	10	11	81	48	5.5	M6×1

Remarks 1. For USFC, rigidities in the Table are theoretical values obtained from the elastic deformation between screw groove and balls when axial load is 30% of the dynamic load rating (C_a).
For UPFC, rigidities are theoretical values when preload is 5% of the dynamic load rating, and axial load is applied to it. Refer to "Technical Description" (Page B521) if axial load and preload differ from the conditions above, or when considering change in the deformation of the ball nut itself.
2. The right turn screw is standard. Please consult NSK for left turn screw.

www.bergab.ru Берг АБ bergab@ya.ru Тел. (495)-228-06-21, факс (495) 223-3071

www.bergab.ru Берг АБ bergab@ya.ru Тел. (495)-228-06-21, факс (495) 223-3071

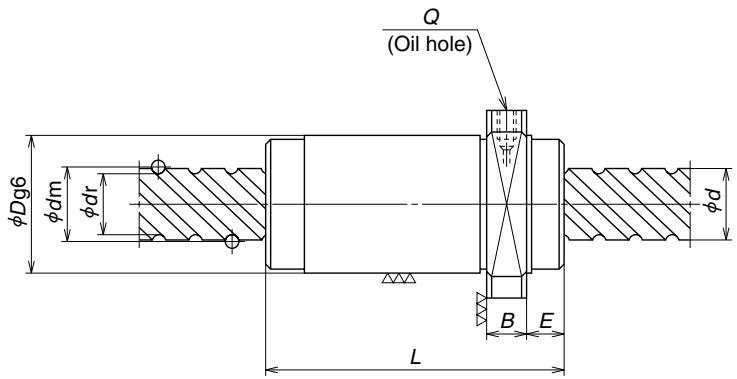

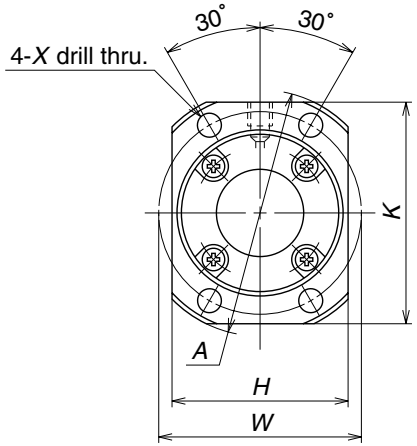

Unit: mm

Model No.	Shaft dia. d	Lead l	Ball dia. D_w	Ball circle dia. d_m	Root dia. d_r	Effective turns of balls Turns × Circuits	Basic load rating (N) Dynamic C_a	Basic load rating (N) Static C_{0a}	Axial rigidity K (N/μm)	Ball nut dimensions D	A	H	K	B	E	L	W	X	Q
USFC 2060-1 **UPFC 2060-1**	20	60	3.175	20.75	17.4	0.7×2	4490	8640	143 224	38	58	40	52	10	12.3	58	48	5.5	M6×1
USFC 2060-2 **UPFC 2060-2**				20.75	17.4	0.7×4	8140	17300	278 433	38	58	40	52	10	12.3	58	48	5.5	M6×1
USFC 2550-1 **UPFC 2550-1**	25	50	3.969	26	21.9	0.7×2	6700	13500	150 234	46	70	48	63	12	13	50	58	6.6	M6×1
USFC 2550-3 **UPFC 2550-3**				26	21.9	1.7×2	14400	32800	363 565	46	70	48	63	12	13	100	58	6.6	M6×1
USFC 2550-6 **UPFC 2550-6**				26	21.9	1.7×4	26100	65600	703 1090	46	70	48	63	12	13	100	58	6.6	M6×1
USFC 2580-1 **UPFC 2580-1**		80	3.969	26	21.9	0.7×2	6700	13500	184 288	46	70	48	63	12	14.5	75	58	6.6	M6×1
USFC 2580-2 **UPFC 2580-2**				26	21.9	0.7×4	12200	27000	359 558	46	70	48	63	12	14.5	75	58	6.6	M6×1
USFC 3264-1 **UPFC 3264-1**	32	64	4.762	33.25	28.3	0.7×2	9800	20900	196 305	58	92	60	82	12	15.5	62	74	9	M6×1
USFC 3264-3 **UPFC 3264-3**				33.25	28.3	1.7×2	21000	51600	452 703	58	92	60	82	12	15.5	126	74	9	M6×1
USFC 3264-6 **UPFC 3264-6**				33.25	28.3	1.7×4	38100	103000	879 1360	58	92	60	82	12	15.5	126	74	9	M6×1

Remarks 1. For USFC, rigidities in the Table are theoretical values obtained from the elastic deformation between screw groove and balls when axial load is 30% of the dynamic load rating (C_a).
For UPFC, rigidities are theoretical values when preload is 5% of the dynamic load rating, and axial load is applied to it. Refer to "Technical Description" (Page B521) if axial load and preload differ from the conditions above, or when considering change in the deformation of the ball nut itself.
2. The right turn screw is standard. Please consult NSK for left turn screw.

www.bergab.ru Берг АБ bergab@ya.ru Тел. (495)-228-06-21, факс (495) 223-3071

www.bergab.ru Берг АБ bergab@ya.ru Тел. (495)-228-06-21, факс (495) 223-3071

B-I-7.6 HMC Series (Ball screws for high-speed machine tools)

(1) Product categories

HMC Series ball screws use return tube recirculation system. There are several models by difference in the preload system (Table I-7•6).

Table I-7•6 Classification of HMC Series

Nut models	Shape	Flange shape	Preload system	Nut length	Page
HZC HZF		Flanged Circular I	Z preload (medium preload)	Medium	B407
HDC HDF		Flanged Circular I	Z preload (medium preload)	Long	B409

(2) Features

● High-speed traveling

High helix leads of 16 mm to 36 mm are used. Furthermore, the ball recirculation return tube is reinforced to make a high-speed traveling of 40 m ~ 120 m/min. possible.

● Low vibration, low noise

Vibration and noise are reduced by NSK's accumulated know-how.

● High rigidity, high load carrying capacity

Double start thread increases the number of effective turns of balls, and a smaller ball size increases the number of the balls. Together they contribute to have high rigidity and high load carrying capacity, despite the high helix lead.

● Compact nut

The size of nut diameter and length were reduced. Comparison with current products -- about 50% reduction in volume.

● Measures against thermal expansion

As measures against thermal error, a hollow shaft ball screw for forced cooling is optional. Please consult NSK.

(3) Accuracy grades

C3 and C5 are available.

※ Please consult NSK for C2 or higher accuracy grades.

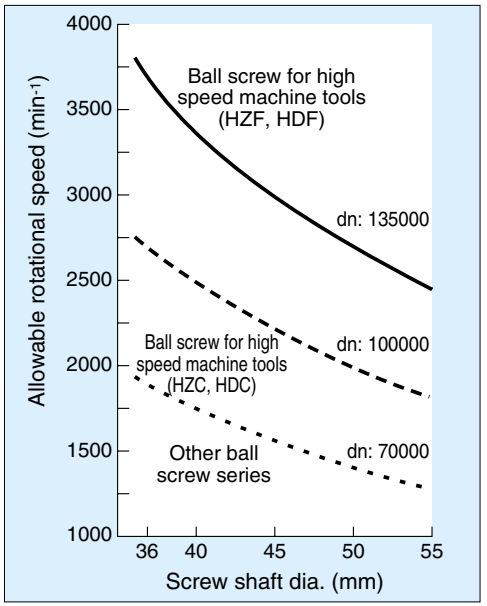

Fig. I-7•5 Comparison of permissible rotational speed

(4) Permissible rotational speed

HMC ball screws are made to high-speed specifications.
Use under the conditions below (Refer to Fig. I-7•5).

HZC, HDC ···· d • n≦100 000
HZF, HDF ····· d • n≦135 000

※ Consider critical speed after deciding on the travel and screw shaft support conditions.
For details, see "Technical Description: Permissible rotational speed" (Page B509).

(5) Model number

A model number that indicates specification factors is structured as shown below.

(Example) Nut model HZF; shaft diameter 40 mm; lead 20 mm; effective turns of balls 3.5

HZF 40 20 – 3.5

Nut model
Screw shaft diameter (mm)
Lead (mm)
Effective turns of balls

www.bergab.ru Берг АБ bergab@ya.ru Тел. (495)-228-06-21, факс (495) 223-3071

www.bergab.ru Берг АБ bergab@ya.ru Тел. (495)-228-06-21, факс (495) 223-3071

Nut model Ⅰ

Offset preload

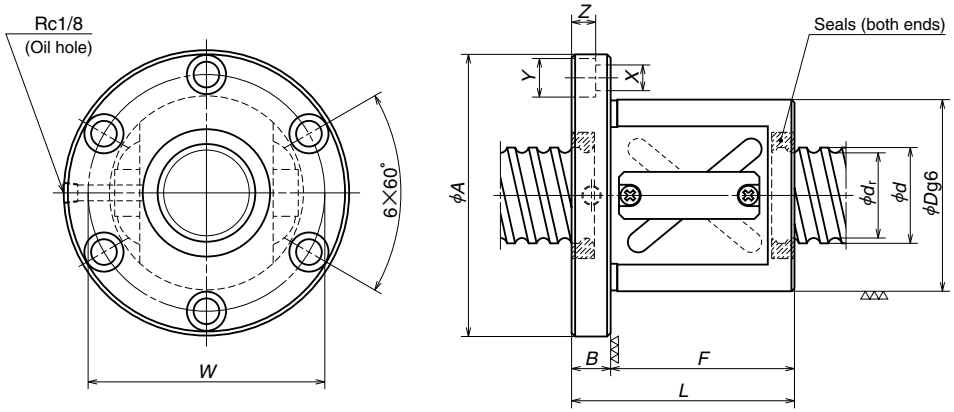

Nut model Ⅱ

Offset preload

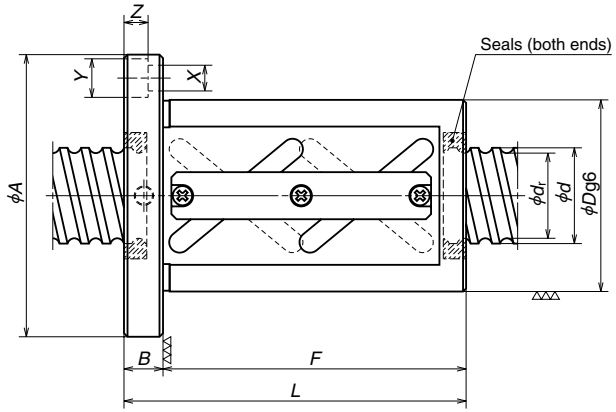

Unit: mm

Model No.	Shaft dia. d	Lead l	Effective turns of balls	Nut model	Root dia. d_r	Basic load rating (N) Dynamic C_a	Basic load rating (N) Static C_{0a}	Axial rigidity (N/μm) 5% C_a	Axial rigidity (N/μm) 10% C_a	Ball nut dimensions D	A	S	B	F	L	E	W	X	Y	Z	Max. feeding speed [m/min]
HZF3616-5	36	16	5	Ⅱ	31.7	40200	102000	1130	1420	78	120	—	18	116	134	—	98	11	17.5	11	60
HZC3616-5										71	113						91				44
HZF3620-3.5		20	3.5	Ⅰ	30.6	44000	98500	830	1050	94	136	—	18	103	121	—	114	11	17.5	11	75
HZC3620-3.5										78	120						98				56
HZF4016-5	40	16	5	Ⅱ	35.7	41200	112000	1230	1550	79	121	—	18	116	134	—	99	11	17.5	11	54
HZC4016-5										76	118						96				40
HZF4020-3.5		20	3.5	Ⅰ	34.6	46100	107000	900	1130	96	138	—	18	103	121	—	116	11	17.5	11	67
HZC4020-3.5										82	124						102				50
HZF4020-5			5	Ⅱ	34.6	62600	153000	1260	1590	96	138	—	18	143	161	—	116	11	17.5	11	67
HZC4020-5										82	124						102				50
HZF4516-5	45	16	5	Ⅱ	40.7	43800	127000	1340	1690	82	124	—	18	116	134	—	102	11	17.5	11	48
HZF4516-7.5			7.5			62100	191000	1960	2470	82	128	—	22	165	187	—	104	14	20	13	48
HZF4520-3.5		20	3.5	Ⅰ	39.6	47600	120000	990	1240	98	140	—	18	104	122	—	118	11	17.5	11	60
HZC4520-3.5										88	130						108				44
HZF4520-5			5	Ⅱ	39.6	64700	170000	1380	1740	98	140	—	18	144	162	—	118	11	17.5	11	60
HZC4520-5										88	130						108				44
HZF4525-3.5		25	3.5	Ⅰ	39.3	56800	137000	1010	1280	101	143	—	18	123	141	—	121	11	17.5	11	75
HZC4525-3.5										92	134						112				56
HZF5020-3.5	50	20	3.5	Ⅰ	44.6	50400	133000	1080	1360	101	143	—	18	104	122	—	121	11	17.5	11	54
HZC5020-3.5										95	137						115				40
HZF5020-5			5	Ⅱ	44.6	68500	191000	1520	1910	101	143	—	18	144	162	—	121	11	17.5	11	54
HZC5020-5										95	137						115				40
HZF5025-3.5		25	3.5	Ⅰ	44.3	58900	152000	1100	1390	103	145	—	18	123	141	—	123	11	17.5	11	67
HZC5025-3.5										98	140						118				50
HZF5025-5			5	Ⅱ	44.3	80100	216000	1540	1940	103	145	—	18	173	191	—	123	11	17.5	11	67
HZC5025-5										98	140						118				50
HZF5030-3.5		30	3.5	Ⅰ	44.3	58900	152000	1100	1390	103	145	—	18	141	159	—	123	11	17.5	11	81
HZC5030-3.5										98	140						118				60
HZF5520-3.5	55	20	3.5	Ⅰ	49.6	51600	145000	1150	1450	103	145	—	18	104	122	—	123	11	17.5	11	49
HZF5520-5			5	Ⅱ		70200	208000	1630	2050	103	145	—	18	144	162	—	123	11	17.5	11	49
HZF5525-3.5		25	3.5	Ⅰ	49.3	62600	165000	1190	1560	105	147	—	18	123	141	—	125	11	17.5	11	61
HZF5525-5			5	Ⅱ		85000	238000	1680	2120	105	147	—	18	173	191	—	125	11	17.5	11	61
HZF5530-3.5		30	3.5	Ⅰ	49.3	62600	165000	1190	1560	105	147	—	18	141	159	—	125	11	17.5	11	73

Remarks 1. Ball screws of 32 or 36mm lead have triple start threads. Others have double start threads.
2. Rigidity listed under the 5%Ca column is when a 5% dynamic load rating is applied as preload. Similarly, those listed under the 10%Ca column means a 10% dynamic load rating is applied.
3. Please consult NSK about special sizes, higher speed or high load drive, and installation of "NSK K1™" Lubrication Unit.

www.bergab.ru Берг АБ bergab@ya.ru Тел. (495)-228-06-21, факс (495) 223-3071

www.bergab.ru Берг АБ bergab@ya.ru Тел. (495)-228-06-21, факс (495) 223-3071

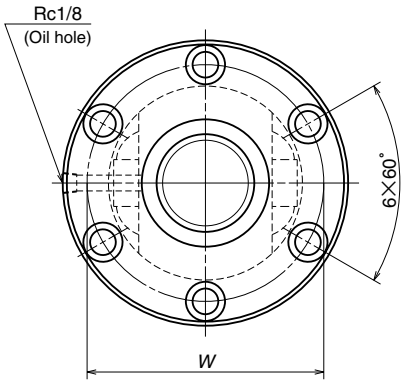

Nut model Ⅲ

Double nut spacer, preload
(the figure indicates use of double start threads)

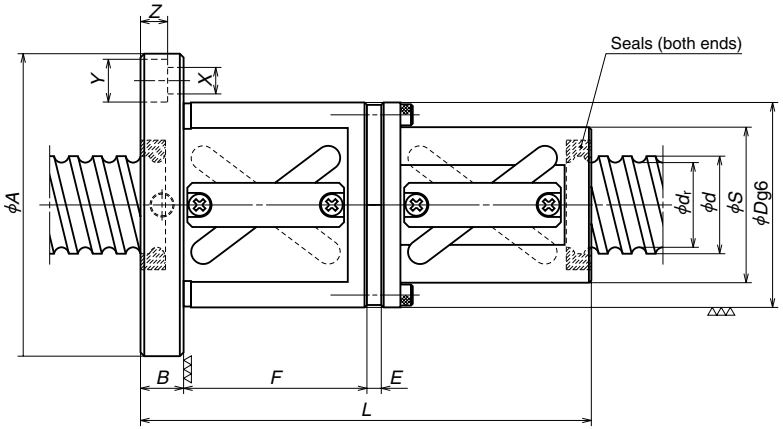

Unit: mm

Model No.	Shaft dia. d	Lead l	Effective turns of balls	Nut model	Root dia. d_r	Basic load rating (N) Dynamic C_a	Basic load rating (N) Static C_{0a}	Axial rigidity (N/μm) 5% C_a	Axial rigidity (N/μm) 10% C_a	Ball nut dimensions D	A	S	B	F	L	E	W	X	Y	Z	Max. feeding speed [m/min]
HDF3620-5	36	20	5	Ⅲ	30.6	59800	138000	1160	1460	94	136	76	18	77	191	5	114	11	17.5	11	75
HDC3620-5										78	120	60					98				56
HDF4025-5	40	25	5	Ⅲ	34.3	74000	175000	1320	1660	98	140	80	18	91	228.5	13.5	118	11	17.5	11	84
HDC4025-5										86	128	68					106				63
HDF4030-5		30	5	Ⅲ	34.3	74000	175000	1320	1660	98	140	80	18	104	248	8	118	11	17.5	11	101
HDC4030-5										86	128	68					106				75
HDF4032-7.5		32	7.5	Ⅲ	34.6	88700	230000	1920	2420	96	142	78	22	109	265	11	118	14	20	13	108
HDC4032-7.5										82	128	64					106				80
HDF4036-4.5		36	4.5	Ⅲ	34.6	57200	138000	1170	1480	96	138	78	18	83	200	4	116	11	17.5	11	120
HDF4525-5	45	25	5	Ⅲ	39.3	77200	197000	1430	1800	101	143	83	18	91	228.5	13.5	121	11	17.5	11	75
HDC4525-5										92	134	74					112				56
HDF4530-5		30	5	Ⅲ	39.3	77200	197000	1430	1800	101	143	83	18	104	248	8	121	11	17.5	11	90
HDC4530-5										92	134	74					112				67
HDF4532-7.5		32	7.5	Ⅲ	39.6	91700	256000	2090	2630	98	144	80	22	109	266	11	120	14	20	13	96
HDC4532-7.5										88	134	70					110				71
HDF4536-4.5		36	4.5	Ⅲ	39.6	59100	155000	1280	1620	98	140	80	18	83	200	4	118	11	17.5	11	108
HDF5030-5	50	30	5	Ⅲ	44.3	80100	216000	1540	1940	103	145	85	18	104	249	8	123	11	17.5	11	81
HDC5030-5										98	140	80					118				60
HDF5032-7.5		32	7.5	Ⅲ	44.6	97100	286000	2270	2860	101	147	83	22	109	266	11	123	14	20	13	86
HDC5032-7.5										95	141	77					117				64
HDF5530-5	55	30	5	Ⅲ	49.3	85000	238000	1680	2120	105	147	87	18	104	249	8	125	11	17.5	11	73
HDF5532-7.5		32	7.5	Ⅲ	49.6	99500	313000	2420	3050	103	149	85	22	109	266	8	125	14	20	13	78

Remarks 1. Ball screws of 32 or 36mm lead have triple start threads. Others have double start threads.
2. Rigidity listed under the 5%Ca column is when a 5% dynamic load rating is applied as preload. Similarly, those listed under the 10%Ca column means a 10% dynamic load rating is applied.
3. Please consult NSK about special sizes, higher speed or high load drive, and installation of "NSK K1™" Lubrication Unit.

www.bergab.ru Берг АБ bergab@ya.ru Тел. (495)-228-06-21, факс (495) 223-3071

www.bergab.ru Берг АБ bergab@ya.ru Тел. (495)-228-06-21, факс (495) 223-3071

B-I-7.7 HTF Series (Ball screws for high load drive)

(1) Product categories

HTF Series ball screws use return tube recirculation system. Their structure and features are as follows.

Table I-7•7 HTF Series

Nut models	Shape	Flange shape	Preload system	Page
HTF		Flanged Circular I	Non-preloaded	B413

(2) Features

● High load carrying capacity

Has an ideal design to bear heavy load. It significantly enhances load rating as well as maximum permissible load.

● Abundant types

Twenty five types of shaft diameter/lead combinations are available.

● Respond to various shaft end configuration

Additional ball screw shaft machining is not required. HTF Series responds to various shaft ends that convey high torque.

HTF Series can be used with: Key seat, involute spline (JIS B 1603), straight sided spline (JIS B 1601), spur gear, etc.

(3) Application

HTF ball screws have made electric drive under high load possible that had previously been unattainable. Therefore, they are capable of highly precise positioning without relying on a hydraulic cylinder. They also reduce equipment sizes, and increase maintenance efficiency.

Major applications: Injection molding machine, press machine, IC molding press, die cast machine, power cylinder, friction welding machine, etc.

Example

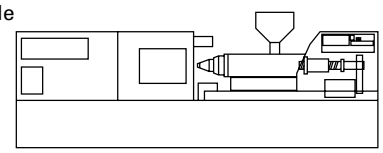

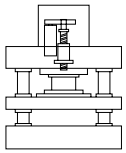

Fig. I-7•6

(4) Accuracy grade • Axial play

C5 and Ct7 are applicable as the standard accuracy grade. (※Please consult NSK for the accuracy grade of C3 or better.)

Standard axial play is “0.020 mm or less” and “0.050 mm or less.”

(5) Precautions for designing machine

For designing shaft end configuration, you should take into account that the HTF Series ball screws are dedicated to high load drive.

The HTF Series is designed to distribute the load uniformly to the load balls for high load drive mechanism. (This product is patented by NSK.)

We recommend installing the ball screws in the way shown below for the full use of this characteristic. In addition, we will make full analysis when you use the HTF Series under extreme conditions such as application of extremely high load or operating in short stroke.

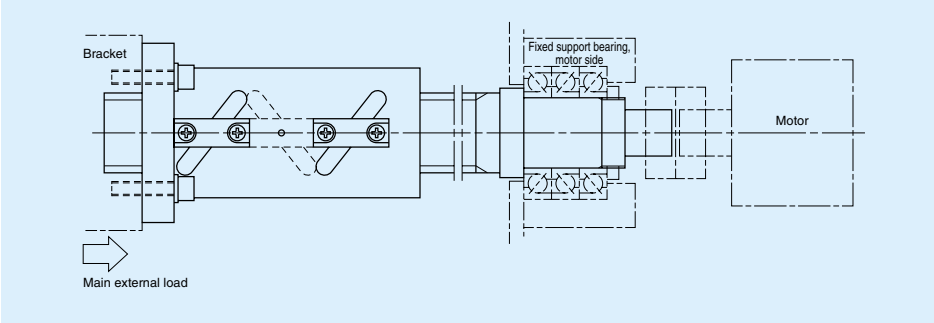

Fig. I-7•7 Recommended installing direction of HTF Series

(6) Model number

A model number that indicates specification factors is structured as shown below.

Nut model HTF; shaft diameter 63 mm; lead 20 mm; effective turns of balls 7.5

H T F 6 3 2 0 - 7 . 5

Nut model
Screw shaft diameter (mm)
Lead (mm)
Effective turns of balls

www.bergab.ru Берг АБ bergab@ya.ru Тел. (495)-228-06-21, факс (495) 223-3071

www.bergab.ru Берг АБ bergab@ya.ru Тел. (495)-228-06-21, факс (495) 223-3071

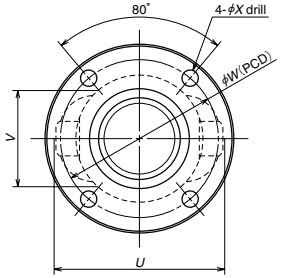

Nut model Ⅰ

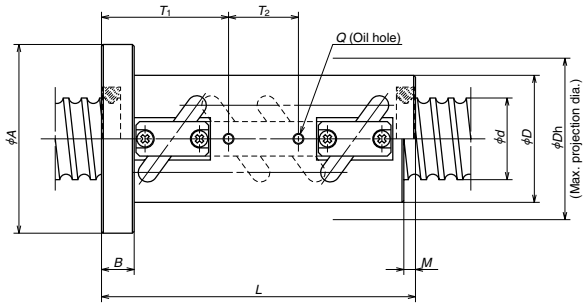

Nut model Ⅱ

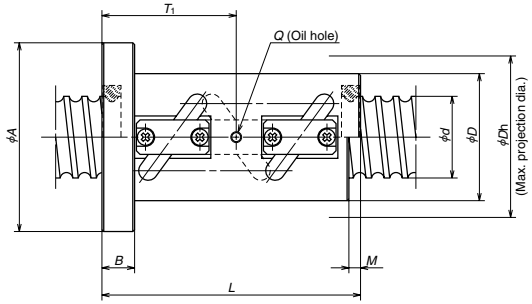

B
414

Unit: mm

Model No.	Shaft dia. d	Lead l	Effective turns of balls Turns × Circuits	Nut model	Basic load rating (N) Dynamic C_a	Static C_{0a}	Ball nut dimensions D	A	B	L	M	W	X	MAX U	MAX V	MAX Dh	Q	T_1	T_2
HTF4510-10	45	10	2.5×4	Ⅰ	174000	567000	70	104	18	173	7	87	9	94	52	95	M6×1	84	—
HTF5010-10	50	10	2.5×4	Ⅰ	181000	633000	75	109	18	173	7	92	9	98	56	99	M6×1	84	—
HTF5012-10		12			210000	700000	77	111	22	207	8	94	9	104	58	105	M6×1	77	60
HTF5014-7.5		14	2.5×3	Ⅱ	211000	623000	80	114	28	200	10	97	9	110	60	111	M6×1	105	—
HTF5016-7.5		16			306000	818000	95	129	28	223	10	112	9	136	66	137	PT1/8	117	—
HTF5510-10	55	10	2.5×4	Ⅰ	188000	699000	80	114	18	173	7	97	9	103	60	104	M6×1	84	—
HTF5512-10		12			220000	781000	82	116	22	207	8	99	9	109	62	110	M6×1	77	60
HTF5514-7.5		14	2.5×3	Ⅱ	216000	696000	85	119	28	200	10	102	9	115	64	116	M6×1	105	—
HTF5516-7.5		16			319000	922000	99	133	28	223	10	116	9	140	70	141	PT1/8	117	—
HTF6312-10	63	12	2.5×4	Ⅰ	232000	891000	92	126	22	207	8	109	9	117	69	118	M6×1	77	60
HTF6314-10		14			298000	1070000	94	128	28	242	10	111	9	123	71	124	M6×1	91	70
HTF6316-7.5		16	2.5×3	Ⅱ	343000	1050000	105	139	28	223	10	122	9	145	76	146	PT1/8	117	—
HTF6316-10			2.5×4	Ⅰ	439000	1410000	105	139	28	271	10	122	9	145	76	146	PT1/8	101	80
HTF6320-7.5		20	2.5×3	Ⅱ	457000	1320000	117	157	32	273	12	137	11	167	81	168	PT1/8	143	—
HTF8014-10	80	14	2.5×4	Ⅰ	335000	1360000	116	150	28	242	10	133	9	144	86	146	M6×1	91	70
HTF8016-7.5		16	2.5×3	Ⅱ	382000	1340000	120	154	32	227	10	137	9	160	92	160	PT1/8	121	—
HTF8016-10			2.5×4	Ⅰ	490000	1790000	120	154	32	275	10	137	9	160	92	160	PT1/8	105	80
HTF8020-7.5		20	2.5×3	Ⅱ	511000	1690000	130	170	32	273	12	150	11	179	96	181	PT1/8	143	—
HTF8020-10			2.5×4	Ⅰ	655000	2250000	130	170	32	333	12	150	11	179	96	181	PT1/8	123	100
HTF8025-7.5		25	2.5×3	Ⅱ	663000	2020000	145	185	40	338	17	165	11	204	100	206	PT1/8	178	—

Remarks 1. Right turn screw is standard.
2. If there is no seal, the nut length is shorter by the lengths of "M" than those with a seal.

www.bergab.ru Берг АБ bergab@ya.ru Тел. (495)-228-06-21, факс (495) 223-3071

www.bergab.ru Берг АБ bergab@ya.ru Тел. (495)-228-06-21, факс (495) 223-3071

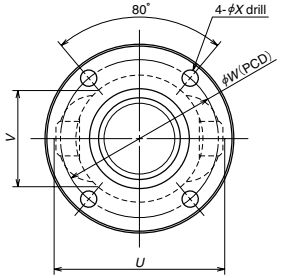

Nut model Ⅰ

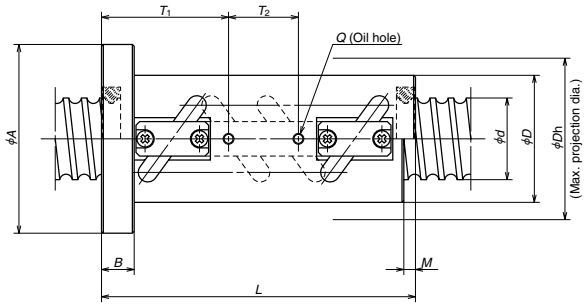

Nut model Ⅱ

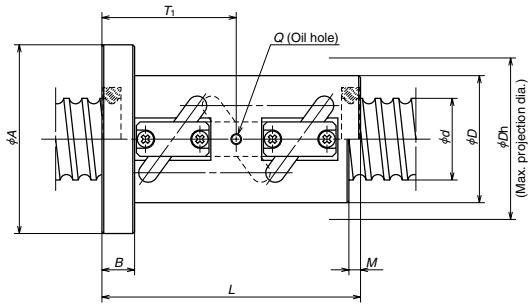

Model No.	Shaft dia. d	Lead l	Effective turns of balls Turns × Circuits	Nut model	Basic load rating (N) Dynamic C_a	Static C_{0a}
HTF10016-7.5	100	16	2.5×3	Ⅱ	423000	1710000
HTF10016-10			2.5×4	Ⅰ	542000	2280000
HTF10020-7.5		20	2.5×3	Ⅱ	571000	2140000
HTF10020-10			2.5×4	Ⅰ	731000	2850000
HTF10025-7.5		25	2.5×3	Ⅱ	734000	2550000
HTF10025-10			2.5×4	Ⅰ	940000	3400000
HTF12016-7.5	120	16	2.5×3	Ⅱ	457000	2050000
HTF12016-10			2.5×4	Ⅰ	586000	2730000
HTF12020-7.5		20	2.5×3	Ⅱ	620000	2550000
HTF12020-10			2.5×4	Ⅰ	794000	3400000
HTF12025-7.5		25	2.5×3	Ⅱ	792000	3080000
HTF12025-10			2.5×4	Ⅰ	1010000	4110000
HTF14020-10	140	20	2.5×4	Ⅰ	849000	4000000
HTF14025-10		25	2.5×4	Ⅰ	1080000	4810000

Remarks 1. Right turn screw is standard.
2. If there is no seal, the nut length is shorter by the lengths of "M" than those with a seal.

単位：mm

Ball nut dimensions D	A	B	L	M	W	X	MAX U	MAX V	MAX Dh	Q	T_1	T_2
145	185	32	227	10	165	11	182	109	184	Rc1/8	121	—
145	185	32	275	10	165	11	182	109	184	Rc1/8	105	80
145	185	32	273	12	165	11	195	113	195	Rc1/8	143	—
145	185	32	333	12	165	11	195	113	195	Rc1/8	123	100
159	199	40	338	17	179	11	217	118	219	Rc1/8	178	—
159	199	40	413	17	179	11	217	118	219	Rc1/8	153	125
173	213	32	227	10	193	11	208	126	210	Rc1/8	121	—
173	213	32	275	10	193	11	208	126	210	Rc1/8	105	80
173	213	40	281	12	193	11	222	130	223	Rc1/8	151	—
173	213	40	341	12	193	11	222	130	223	Rc1/8	131	100
173	213	40	338	17	193	11	232	134	233	Rc1/8	178	—
173	213	40	413	17	193	11	232	134	233	Rc1/8	153	125
204	250	40	341	12	226	14	245	147	248	Rc1/8	131	100
204	250	40	413	17	226	14	255	151	258	Rc1/8	153	125

www.bergab.ru Берг АБ bergab@ya.ru Тел. (495)-228-06-21, факс (495) 223-3071

www.bergab.ru Берг АБ bergab@ya.ru Тел. (495)-228-06-21, факс (495) 223-3071

MF Series	B419
S1 Series	B455
NDT, NDD Series	B469
ΣSeries: “Robotte”	B477
Hollow Shaft Ball Screws	B489
Ball Screws in Special Shape	B495

B-Ⅰ-8 Special Ball Screws: Dimension Table and Model Numbers

SPECIAL BALL SCREWS

www.bergab.ru Берг АБ bergab@ya.ru Тел. (495)-228-06-21, факс (495) 223-3071

www.bergab.ru Берг АБ bergab@ya.ru Тел. (495)-228-06-21, факс (495) 223-3071

B-Ⅰ-8.1 MF Series (Ball screw equipped with "NSK K1™" Lubrication Unit)

(1) Structure of Ball Screw equipped with "NSK K1™" Lubrication Unit

The structure makes it possible to have a stable contact between the NSK K1 and outside of a ball screw with moderate force by a garter spring which fits onto outside of the NSK K1.

(2) Features

"NSK K1™" is a new, efficient lubrication unit. Equipped with "NSK K1™", the ball screws demonstrate a superb performance as shown below.

● Long-term, maintenance-free usage

In mechanical environments where lubrication is difficult to apply, long-term running efficiency is maintained by using the "NSK K1™" in combination with grease.

▼

For automotive component processing lines, etc.

● Does not pollute the environment

A very small volume of grease combined with NSK K1 Seal can provide sufficient lubrication in the environment where grease is undesirable as well as in the environment where high cleanliness is required.

▼

Food processing/medical equipment, liquid crystal display/semiconductor manufacturing equipment, etc.

● Fits right in the environment where lubricant is washed away

Used with grease, life of the machine is prolonged even when the machine is washed entirely by water, or in an environment where the machine is exposed to rain or wind.

▼

Food processing equipment, housing/construction machines, etc.

● Maintains efficiency in dusty environment

In environment where oil- and grease-absorbing dust is produced, long-term efficiency in lubrication and prevention from foreign inclusions are maintained by using the "NSK K1™" in combination with grease.

▼

Woodworking machines, etc.

(3) Performances

◇Comparative duration test of samples with and without NSK K1 and testing conditions

Ball screw	Shaft dia. 20mm, lead 20mm
Lubrication	Comparison with only NSK K1 against no lubrication
Speed	4 000min^{-1} (80m/min)
Stroke	600mm

◇Test results

Without lubricant, operation became impossible after running 8.6 km. With NSK K1 alone, it was possible to continue running exceeding 10,000 km.

Graph 1 Duration test results on ball screws without lubricant

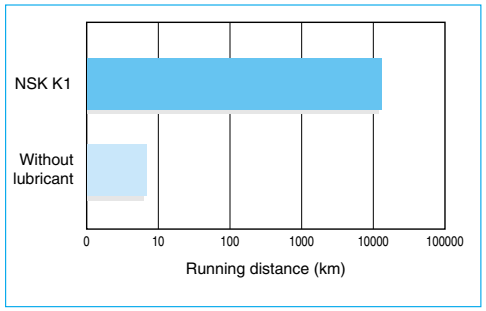

NSK conducts various tests under different conditions. Please consult NSK.

(4) Application examples

Ball screws equipped with NSK K1 are maintenance-free for a long period of time. Its application is expanding in various industries.

- Semiconductor/liquid crystal display manufacturing equipment
- Industrial robot
- Wood working machines
- Machine tools
- Automobile manufacturing machines

Precautions for handling

To extend high functions of NSK K1 Seal, please observe the following precautions.

1. Temperature range for use: Maximum temperature for use: 50℃
   Momentary maximum temperature in use: 80℃
2. Chemicals that should not come to contact:
   Do not leave K1 Seal in organic solvent, white kerosene such as hexane, thinner which removes oil, and rust preventive oil which contains white kerosene.

Note: Water-type cutting oil, oil-type cutting oil, grease such as mineral-type AV2 and ester-type PS2 do not damage K1 Seal.

www.bergab.ru Берг АБ bergab@ya.ru Тел. (495)-228-06-21, факс (495) 223-3071

www.bergab.ru Берг АБ bergab@ya.ru Тел. (495)-228-06-21, факс (495) 223-3071

(5) Specifications and reference number

① MF Series: Custom made ball screws (Specifications and reference number)

● Specifications

* Ball screw is equipped with "NSK K1™" Lubrication Unit.
  NSK K1 is installed between the ball screw nut and the labyrinth seal. Therefore, the overall nut length is slightly longer than other types.
* Combination of NSK standard grease (factory-packed in the nut) and NSK K1 is standard specifications.
* Accuracy grade, clearance, preload specifications remain unchanged. There is a slight increase in torque due to the equipped NSK K1.

Optional specifications

Please consult NSK for mounting NSK K1 on ball screws other than MF Series (in respect to size and accuracy rate), those with stainless steel specifications, and those with surface treatment.

● Reference number

Reference number(example)： **W2003 - 1P K1 - C5Z10**

NSK K1-equipped ball screw

* "K1" is added at the end of "nut model code" and "specifications number".

② MF Series: Standardized ball screws in stock; WFA Series: Specifications and reference number

● Specifications

* Ball screw is equipped with "NSK K1™" Lubrication Unit.
  NSK K1 is installed between the ball screw nut and the labyrinth seal in standard specifications. Therefore, overall nut length is slightly longer than other types.
* Combination of NSK standard grease (factory-packed in the nut) and NSK K1 is the standard specifications.
* Accuracy grade and preload specifications

Accuracy grade	Preload code
JIS C5	Z (clearance 0)

*There is a slight increase in dynamic friction torque due to the equipped NSK K1. (See Note for ball screw specifications list in pages B441-B454.)

●Reference number

Example of a reference number： **WFA 10 04 C5 Z - 230 K1**

- WFA Series
- Screw shaft dia. (mm)
- Lead (mm)
- Accuracy grade
- Axial play
- Overall screw shaft length (mm)
- NSK K1 equipped

* "K1" is added at the end of "nut model code" and "specifications number."

www.bergab.ru Берг АБ bergab@ya.ru Тел. (495)-228-06-21, факс (495) 223-3071

www.bergab.ru Берг АБ bergab@ya.ru Тел. (495)-228-06-21, факс (495) 223-3071

Table I-8.1 MF Series Standardized ball screws in stock WFA Series
Reference numbers (combinations of "stroke" and "shaft dia. x lead")

(Unit: mm)

Shaft dia. x lead (Pages to be referrsed)		φ10×04 B441	φ12×05 B443	φ12×10 B445	φ15×10 B447	φ15×20 B449	φ20×10 B451	φ20×20 B453
Stroke (nominal)	Max. stroke							
80	83			WFA1210C5Z-230K1				
	94		WFA1205C5Z-230K1					
	98.5	WFA1004C5Z-230K1						
190	198.5	WFA1004C5Z-330K1						
	205					WFA1520C5Z-371K1		
210	213				WFA1510C5Z-371K1			
230	233			WFA1210C5Z-380K1				
	244		WFA1205C5Z-380K1					
290	298.5	WFA1004C5Z-430K1						
400	411						WFA2010C5Z-599K1	
430	433			WFA1210C5Z-580K1				
	444		WFA1205C5Z-580K1					
600	605					WFA1520C5Z-771K1		
	613				WFA1510C5Z-771K1			
	626							WFA2020C5Z-820K1
700	711						WFA2010C5Z-899K1	
1000	1005					WFA1520C5Z-1171K1		
	1013				WFA1510C5Z-1171K1			
	1026							WFA2020C5Z-1220K1
1200	1211						WFA2010C5Z-1399K1	
1400	1426							WFA2020C5Z-1620K1
Reference numbers of the recommended support units (on fixed side)	WBK10-01A	○	○	○				
	WBK10-10	○	○	○				
	WBK12-01A				○	○		
	WBK12-11				○	○		
	WBK15-01A						○	○
	WBK15-11						○	○

"K1 Kit" can be equipped on NSK standard ball screws

"K1 Kit" is a lubrication unit which can be equipped on NSK standardized ball screws in stock.
Ball screws compatible with "K1 Kit": Ball screws in A Series. Their reference numbers contain "FA" as shown below.

Example of a reference number : **W2507 FA - 3P - C5Z25**

NSK installs "K1 Kit" for customers. Ball nut dimensions are different from the WFA series.
Please consult NSK for details.

www.bergab.ru Берг АБ bergab@ya.ru Тел. (495)-228-06-21, факс (495) 223-3071

www.bergab.ru Берг АБ bergab@ya.ru Тел. (495)-228-06-21, факс (495) 223-3071

(6) MF Series: Dimension Table of custom made ball screws

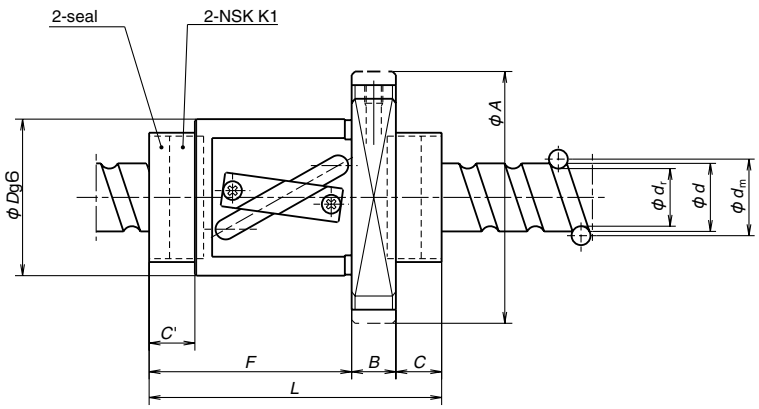

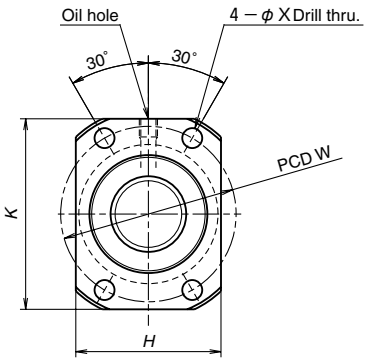

Unit: mm

Model No.	Screw shaft dia. d	Lead l	Ball dia. D_w	Ball circle dia. d_m	Root dia. d_r	Effective turns of balls Turns × Circuit number	Basic load rating (N) Dynamic C_a	Static C_{0a}	Axial play hardness K (N/μm)	Ball nut dimensions D	A	H	K	B	F	L	W	X	C	C'
PFT1004-2.5	10	4	2.000	10.3	8.2	2.5×1	1730	2230	76	26	46	28	42	10	37.5	61.5	36	4.5	14	15
PFT1205-2.5	12	5	2.381	12.3	9.8	2.5×1	2370	3160	89	30	50	32	45	10	42	66	40	4.5	14	15
LPFT1210-2.5	12	10	2.381	12.5	10.0	2.5×1	2360	3240	90	30	50	32	45	10	55	79	40	4.5	14	17
PFT1405-2.5	14	5	3.175	14.5	11.2	2.5×1	4280	5840	116	34	57	34	50	10	41	65	45	5.5	14	15
LPFT1510-2.5	15	10	3.175	15.5	12.2	2.5×1	4450	6380	127	34	57	34	50	10	52	76	45	5.5	14	15
PFT1605-2.5	16	5	3.175	16.5	13.2	2.5×1	4620	6750	137	40	63	40	55	10	43	67	51	5.5	14	15
PFT2005-5	20	5	3.175	20.5	17.2	2.5×2	9410	17100	311	44	67	46	59	10	57	81	55	5.5	14	14
LPFT2010-2.5	20	10	3.969	21.0	16.9	2.5×1	6880	10800	169	46	74	46	66	10	54	78	59	6.6	14	14
LPFT2020-1.5	20	20	3.969	21.0	16.9	1.5×1	5370	8450	137	46	74	46	66	10	60	84	59	6.6	14	14

* Sizes not listed in the Table are also available. Please consult NSK.
* "NSK K1" can be installed on other types not listed in the Table. Please consult NSK.
* Rigidity in the Table is theoretical value obtained from the elastic deformation between screw groove and ball when the preload is 5% of the dynamic load rating (Ca), and an axial load is applied to it. Refer to "Technical description" (B521) if preload differs from the conditions above, or when considering change in the deformation of the ball nut itself.

www.bergab.ru Берг АБ bergab@ya.ru Тел. (495)-228-06-21, факс (495) 223-3071

www.bergab.ru Берг АБ bergab@ya.ru Тел. (495)-228-06-21, факс (495) 223-3071

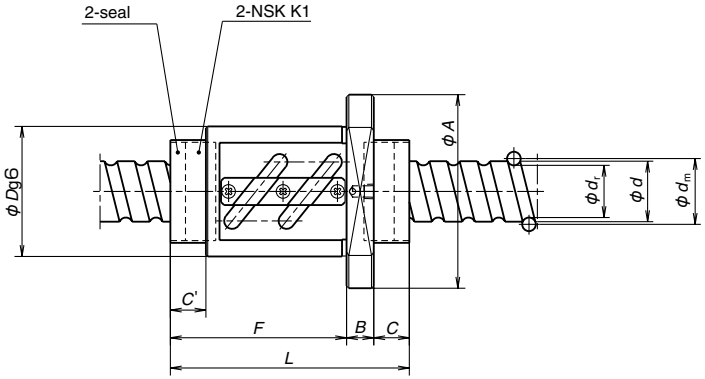

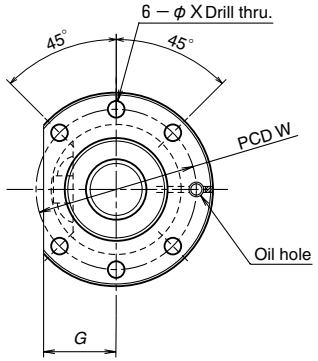

Unit: mm

Model No.	Screw shaft dia. d	Lead l	Ball dia. D_w	Ball circle dia. d_m	Root dia. d_r	Effective turns of balls Turns × Circuit number	Basic load rating (N) Dynamic C_a	Static C_{0a}
PFT2506-5	25	6	3.969	25.5	21.4	2.5×2	14100	26800
PFT2510-2.5	25	10	4.762	25.5	20.5	2.5×1	9940	16000
PFT2810-2.5	28	10	4.762	28.5	23.5	2.5×1	10500	18000
PFT3206-5	32	6	3.969	32.5	28.4	2.5×2	15500	34700
PFT3210-5	32	10	6.35	33.0	26.4	2.5×2	29200	54000
PFT3212-3	32	12	6.35	33.0	26.4	1.5×2	18800	32400
PFT3610-5	36	10	6.35	37.0	30.4	2.5×2	31100	61300
PFT4008-5	40	8	4.762	40.5	35.5	2.5×2	22000	51600
PFT4012-5	40	12	7.144	41.5	34.1	2.5×2	38400	77500

Axial play hardness K (N/μm)	Ball nut dimensions D	A	G	B	F	L	W	X	C	C'
383	53	76	29	12	65	93	64	5.5	16	17
203	58	85	32	12	61	89	71	6.6	16	17
220	60	94	36	12	62	90	76	9	16	17
468	62	89	34	12	65	93	75	6.6	16	17
494	74	108	41	12	94	122	90	9	16	17
303	74	108	41	12	86	114	90	9	16	17
537	75	120	45	15	97	131	98	11	19	20
570	74	108	41	16	82	117	90	9	19	20
600	86	128	48	16	109	144	106	11	19	20

* Sizes not listed in the Table are also available. Please consult NSK.
* "NSK K1" can be installed on other types not listed in the Table. Please consult NSK.
* Rigidity in the Table is theoretical value obtained from the elastic deformation between screw groove and ball when the preload is 5% of the dynamic load rating (Ca), and an axial load is applied to it. Refer to "Technical description" (B521) if preload differs from the conditions above, or when considering change in the deformation of the ball nut itself.

www.bergab.ru Берг АБ bergab@ya.ru Тел. (495)-228-06-21, факс (495) 223-3071

www.bergab.ru Берг АБ bergab@ya.ru Тел. (495)-228-06-21, факс (495) 223-3071

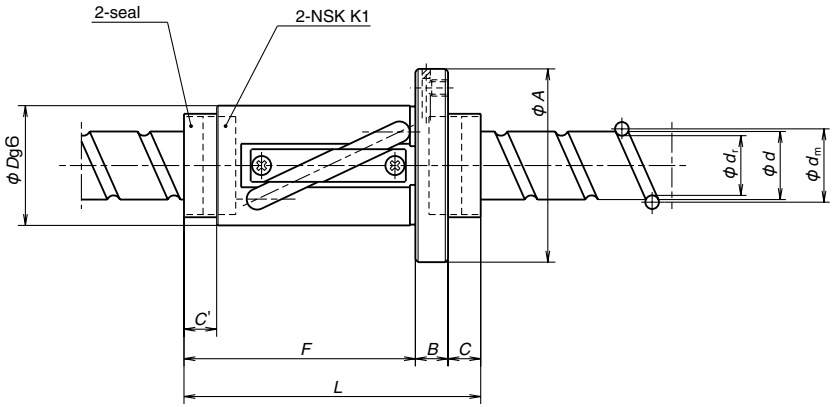

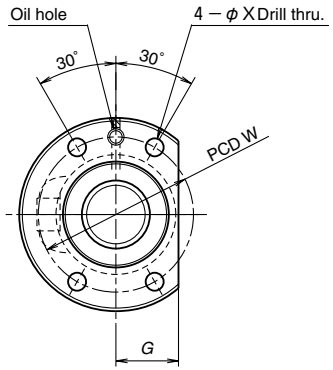

Unit: mm

Model No.	Screw shaft dia. d	Lead l	Ball dia. D_w	Ball circle dia. d_m	Root dia. d_r	Effective turns of balls Turns × Circuit number	Basic load rating (N) Dynamic C_a	Static C_{0a}
LPFT2520-2.5	25	20	4.762	26.25	21.3	2.5×1	9900	16400
LPFT2525-1.5	25	25	4.762	26.25	21.3	1.5×1	6380	9540
LPFT3225-2.5	32	25	4.762	33.25	28.3	2.5×1	11300	20900
LPFT3232-1.5	32	32	4.762	33.25	28.3	1.5×1	7280	12400
LPFT4032-2.5	40	32	6.35	41.75	35.1	2.5×1	18000	35000
LPFT4040-1.5	40	40	6.35	41.75	35.1	1.5×1	11600	20600

Axial play hardness K (N/μm)	Ball nut dimensions D	A	G	B	F	L	W	X	C	C'
210	44	71	23	12	85	109	57	6.6	12	12
127	44	71	23	12	74	98	57	6.6	12	12
251	51	85	26	12	98	122	67	9.0	12	12
161	51	85	26	12	85	109	67	9.0	12	12
315	64	106	33	16	119	151	84	11	14	14
199	64	106	33	16	101	133	84	11	14	14

* Sizes not listed in the Table are also available. Please consult NSK.
* "NSK K1" can be installed on other types not listed in the Table. Please consult NSK.
* Rigidity in the Table is theoretical value obtained from the elastic deformation between screw groove and ball when the preload is 5% of the dynamic load rating (Ca), and an axial load is applied to it. Refer to "Technical description" (B521) if preload differs from the conditions above, or when considering change in the deformation of the ball nut itself.

www.bergab.ru Берг АБ bergab@ya.ru Тел. (495)-228-06-21, факс (495) 223-3071

www.bergab.ru Берг АБ bergab@ya.ru Тел. (495)-228-06-21, факс (495) 223-3071

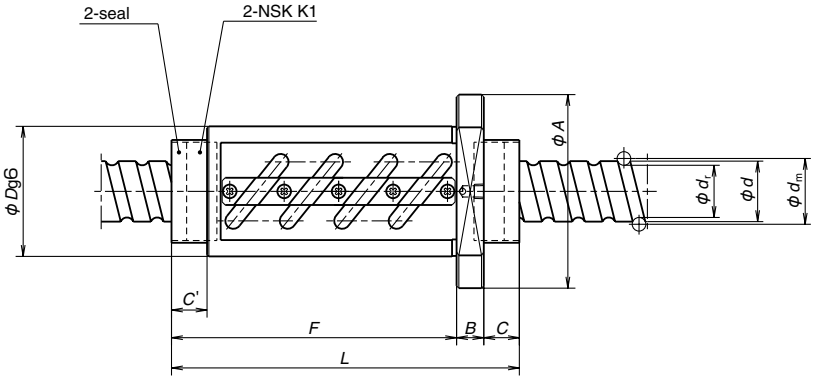

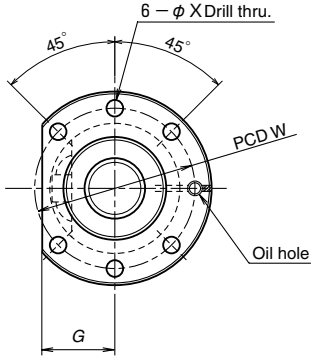

Unit: mm

Model No.	Screw shaft dia. d	Lead l	Ball dia. D_w	Ball circle dia. d_m	Root dia. d_r	Effective turns of balls Turns × Circuit number	Basic load rating (N) Dynamic C_a	Static C_{0a}	Axial play hardness K (N/μm)	Ball nut dimensions D	A	G	B	F	L	W	X	C	C'
ZFT2505-10	25	5	3.175	25.5	22.2	2.5×2	16600	43700	876	50	73	28	10	89	115	61	5.5	16	17
ZFT2510-6	25	10	4.763	25.5	20.5	1.5×2	18500	38100	562	58	85	32	12	75	103	71	6.6	16	17
ZFT3206-10	32	6	3.969	32.5	28.4	2.5×2	24700	69400	1090	62	89	34	12	101	129	75	6.6	16	17
ZFT3210-5	32	10	6.35	33.0	26.4	2.5×1	25500	54000	594	74	108	41	12	94	122	90	9	16	17
ZFT4008-10	40	8	4.762	40.5	35.5	2.5×2	34900	103000	1330	74	108	41	16	130	165	90	9	19	20
ZFT4010-7	40	10	6.35	41.0	34.4	3.5×1	38300	96000	988	82	124	47	16	117	152	102	11	19	20
ZFT5010-10	50	10	6.35	51.0	44.4	2.5×2	57700	175000	1677	93	135	51	18	157	194	113	11	19	20
ZFT5016-5	50	16	7.938	51.5	43.2	2.5×1	42800	107000	883	100	146	55	18	135	172	122	14	19	20

* Sizes not listed in the Table are also available. Please consult NSK.
* "NSK K1" can be installed on other types not listed in the Table. Please consult NSK.
* Rigidity in the Table is theoretical value obtained from the elastic deformation between screw groove and ball when the preload is 10% of the dynamic load rating (Ca), and an axial load is applied to it. Refer to "Technical description" (B521) if preload differs from the conditions above, or when considering change in the deformation of the ball nut itself.

www.bergab.ru Берг АБ bergab@ya.ru Тел. (495)-228-06-21, факс (495) 223-3071

www.bergab.ru Берг АБ bergab@ya.ru Тел. (495)-228-06-21, факс (495) 223-3071

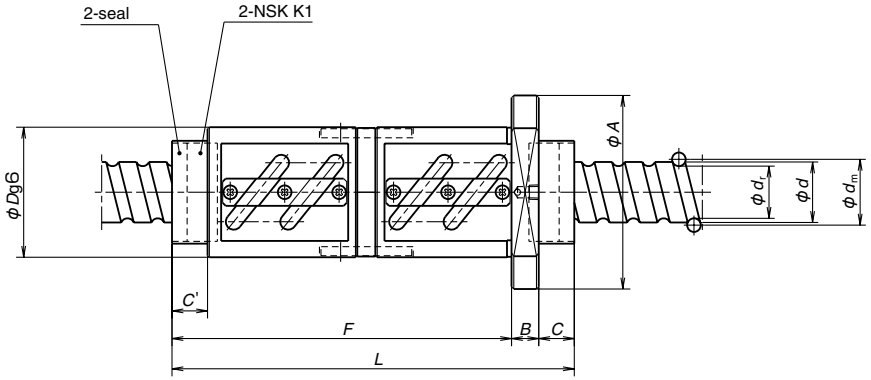

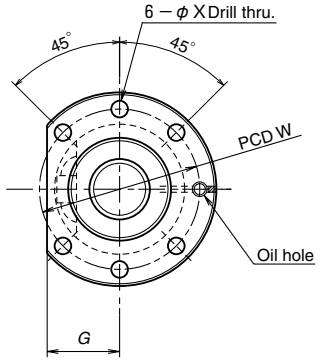

Unit: mm

Model No.	Screw shaft dia. d	Lead l	Ball dia. D_w	Ball circle dia. d_m	Root dia. d_r	Effective turns of balls Turns × Circuit number	Basic load rating (N) Dynamic C_a	Static C_{0a}
DFT2805-5	28	5	3.175	28.5	25.2	2.5×2	17400	48800
DFT2810-3	28	10	4.762	28.5	23.5	1.5×2	19500	43000
DFT3210-5	32	10	6.35	33.0	26.4	2.5×2	46300	108000
DFT3212-3	32	12	6.35	33.0	26.4	1.5×2	29900	64800
DFT3610-5	36	10	6.35	37.0	30.4	2.5×2	49300	123000
DFT4010-5	40	10	6.35	41.0	34.4	2.5×2	52000	137000
DFT4012-5	40	12	7.144	41.5	34.1	2.5×2	61000	155000
DFT4510-5	45	10	6.35	46.0	39.4	2.5×2	54200	155000
DFT4512-5	45	12	7.144	46.5	39.1	2.5×2	64200	177000
DFT5012-5	50	12	7.938	51.5	43.2	2.5×2	77600	214000
DFT5016-5	50	16	7.938	51.5	43.2	2.5×2	77600	214000
DFT5516-5	55	16	7.938	56.5	48.2	2.5×2	81300	237000
DFT6316-5	63	16	9.525	65.0	55.2	2.5×2	144000	455000
DFT6320-5	63	20	9.525	65.0	55.2	2.5×2	144000	455000

Axial play hardness K (N/μm)	Ball nut dimensions D	A	G	B	F	L	W	X	C	C'
959	55	85	31	12	109	137	69	6.6	16	17
618	60	94	36	12	146	174	76	9	16	17
1150	74	108	41	12	184	212	90	9	16	16
707	74	108	41	12	170	198	90	9	16	16
1270	75	120	45	15	187	221	98	11	19	19
1390	82	124	47	16	187	222	102	11	19	19
1420	86	128	48	16	217	252	106	11	19	19
1520	88	132	50	16	187	222	110	11	19	19
1570	90	132	50	16	219	254	110	11	19	19
1710	100	146	55	18	219	256	122	14	19	19
1710	100	146	55	18	263	300	122	14	19	19
1970	108	150	58	18	138	178	128	11	22	22
2710	122	180	69	18	282	322	150	18	22	22
2710	122	180	69	18	322	362	150	18	22	22

* Sizes not listed in the Table are also available. Please consult NSK.
* "NSK K1" can be installed on other types not listed in the Table. Please consult NSK.
* Rigidity in the Table is theoretical value obtained from the elastic deformation between screw groove and ball when the preload is 10% of the dynamic load rating (Ca), and an axial load is applied to it. Refer to "Technical description" (B521) if preload differs from the conditions above, or when considering change in the deformation of the ball nut itself.

www.bergab.ru Берг АБ bergab@ya.ru Тел. (495)-228-06-21, факс (495) 223-3071

www.bergab.ru Берг АБ bergab@ya.ru Тел. (495)-228-06-21, факс (495) 223-3071

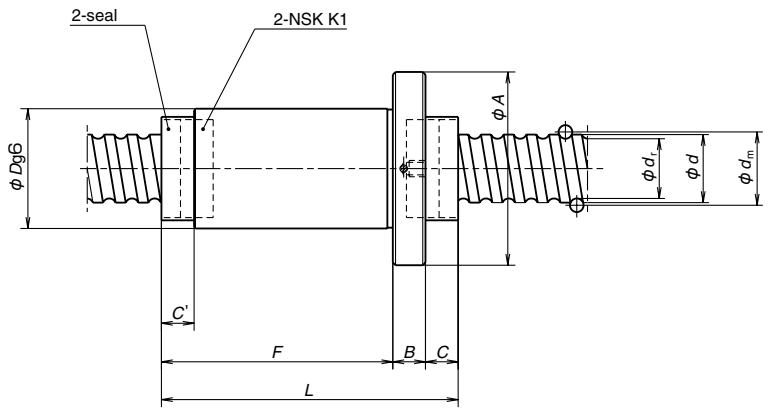

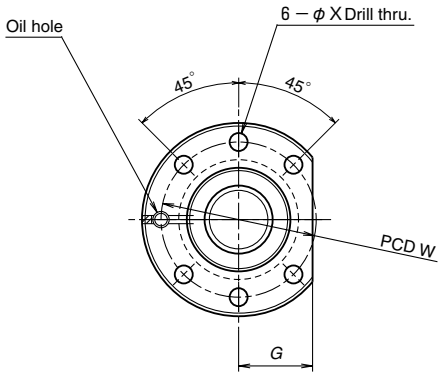

Unit: mm

Model No.	Screw shaft dia. d	Lead l	Ball dia. D_w	Ball circle dia. d_m	Root dia. d_r	Effective turns of balls Turns × Circuit number	Basic load rating (N) Dynamic C_a	Static C_{0a}
ZFD2005-6	20	5	3.175	20.75	17.4	1×3	8620	17500
ZFD2506-6	25	6	3.969	26.0	21.9	1×3	12900	27300
ZFD2510-4	25	10	4.762	26.25	21.3	1×2	11400	21400
ZFD3208-8	32	8	4.762	33.25	28.3	1×4	23500	55800
ZFD3210-6	32	10	6.35	33.75	27.1	1×3	25900	52800
ZFD3212-6	32	12	6.35	33.75	27.1	1×3	25900	52800
ZFD4010-8	40	10	6.35	41.75	35.1	1×4	38400	93300
ZFD4012-8	40	12	6.35	41.75	35.1	1×4	38400	93300
ZFD5010-8	50	10	6.35	51.75	45.1	1×4	43600	120000
ZFD5012-6	50	12	7.938	52.25	44.0	1×3	44800	109000

* Sizes not listed in the Table are also available. Please consult NSK.
* "NSK K1" can be installed on other types not listed in the Table. Please consult NSK.
* Rigidity in the Table is theoretical value obtained from the elastic deformation between screw groove and ball when the preload is 10% of the dynamic load rating (Ca), and an axial load is applied to it. Refer to "Technical description" (B521) if preload differs from the conditions above, or when considering change in the deformation of the ball nut itself.

Axial play hardness K (N/μm)	Ball nut dimensions D	A	G	B	F	L	W	X	C	C'
382	35	58	22.5	12	66	87	46	5.5	9	9
470	40	63	24	12	78	102	51	5.5	12	—
323	42	69	26	12	82	106	55	6.6	12	12
774	50	84	32	12	112	136	66	9	12	12
588	54	88	34	12	114	138	70	9	12	12
588	54	88	34	12	129	153	70	9	12	12
970	62	104	40	16	137	167	82	11	14	14
970	62	104	40	16	159	189	82	11	14	14
1200	72	114	44	18	137	169	92	11	14	14
906	75	121	47	18	135	167	97	14	14	14

www.bergab.ru Берг АБ bergab@ya.ru Тел. (495)-228-06-21, факс (495) 223-3071

www.bergab.ru Берг АБ bergab@ya.ru Тел. (495)-228-06-21, факс (495) 223-3071

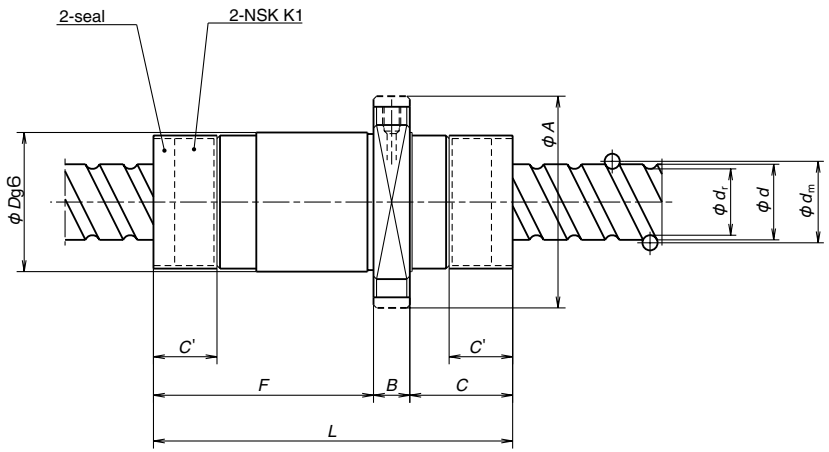

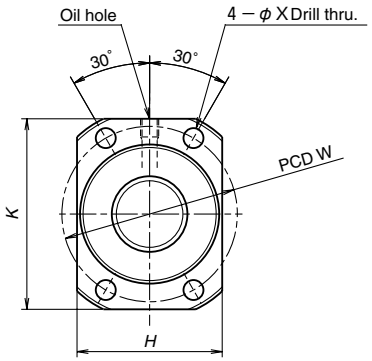

Unit: mm

Model No.	Screw shaft dia. d	Lead l	Ball dia. D_w	Ball circle dia. d_m	Root dia. d_r	Effective turns of balls Turns × Circuit number	Basic load rating (N) Dynamic C_a	Static C_{0a}
UPFC1520-1.5	15	20	3.175	15.50	12.20	1.7×1	5070	8730
UPFC2040-1	20	40	3.175	20.75	17.40	0.7×2	4490	8640
UPFC2550-1	25	50	3.969	26.0	21.9	0.7×2	6700	13500
UPFC3264-1	32	64	4.763	33.25	28.3	0.7×2	9800	20900
LPFC1616-3	16	16	2.778	16.65	13.7	1.7×2	6380	12500
LPFC2020-3	20	20	3.175	20.75	17.4	1.7×2	9620	21000
LPFC2525-3	25	25	3.969	26.0	21.9	1.7×2	14400	32800
LPFC3232-3	32	32	4.762	33.25	28.3	1.7×2	21000	51600
LPFC4040-3	40	40	6.35	41.75	35.2	1.7×2	33500	86500
LPFC5050-3	50	50	7.938	52.25	44.1	1.7×2	50000	135000

* Sizes not listed in the Table are also available. Please consult NSK.
* "NSK K1" can be installed on other types not listed in the Table. Please consult NSK.
* Rigidity in the Table is theoretical value obtained from the elastic deformation between screw groove and ball when the preload is 5% of the dynamic load rating (Ca), and an axial load is applied to it. Refer to "Technical description" (B521) if preload differs from the conditions above, or when considering change in the deformation of the ball nut itself.

Axial play hardness K (N/μm)	Ball nut dimensions D	A	H	K	B	F	L	W	X	C	C'
176	34	55	36	50	10	42	81	45	5.5	29	18
191	38	58	40	52	10	38	77	48	5.5	29	18
234	46	70	48	63	12	46	92	58	6.6	34	21
305	58	92	60	82	12	55.5	104	74	9.0	36.5	21
293	32	53	34	46	10	36	74	42	4.5	28	18
404	39	62	41	56	10	42.5	82	50	5.5	29.5	18
499	47	74	49	66	12	51	97	60	6.6	34	21
623	58	92	60	82	12	63	112	74	9	37	21
773	73	114	75	102	15	74.5	133	93	11	93.5	24
952	90	135	92	122	20	89.5	155	112	14	45.5	24

www.bergab.ru Берг АБ bergab@ya.ru Тел. (495)-228-06-21, факс (495) 223-3071

www.bergab.ru Берг АБ bergab@ya.ru Тел. (495)-228-06-21, факс (495) 223-3071

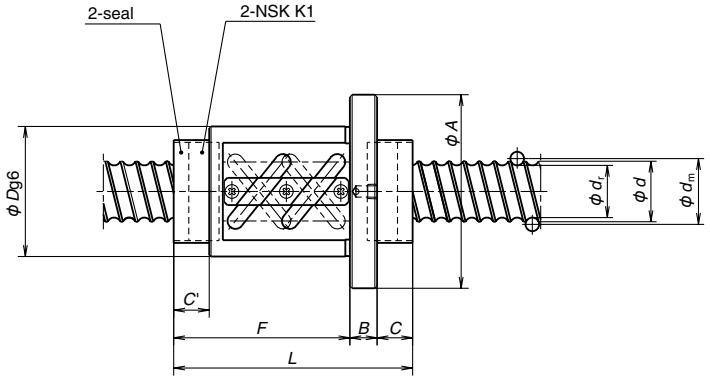

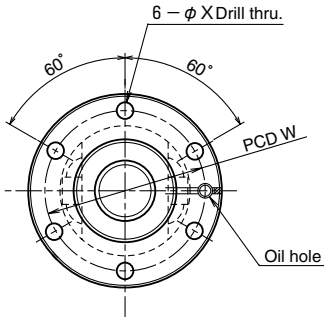

Unit: mm

Model No.	Screw shaft dia. d	Lead l	Ball dia. D_w	Ball circle dia. d_m	Root dia. d_r	Effective turns of balls Turns × Circuit number	Basic load rating (N) Dynamic C_a	Static C_{0a}	Axial play hardness K (N/μm)	Ball nut dimensions D	A	B	F	L	W	X	C	C'
HZF3616-5	36	16	4.762	36.5	31.7	2.5×2	40200	102000	1420	78	120	15	129	163	98	11	19	19
HZF3620-3.5	36	20	6.35	37	30.6	3.5×1	44000	98500	1050	94	136	15	112	146	114	11	19	19
HZF4016-5	40	16	4.762	40.5	35.7	2.5×2	41200	112000	1550	79	121	16	129	164	99	11	19	19
HZF4020-5	40	20	6.35	41	34.6	2.5×2	62600	153000	1590	96	138	16	154	189	116	11	19	19
HZF4520-5	45	20	6.35	46	39.6	2.5×2	64700	170000	1740	98	140	16	155	190	118	11	19	19
HZF5020-5	50	20	6.35	51	44.6	2.5×2	68500	191000	1910	101	143	18	155	192	121	11	19	19
HZF5025-5	50	25	7.144	51.5	44.3	2.5×2	80100	216000	1940	103	145	18	184	221	123	11	19	19
HZF5520-5	55	20	6.35	56	49.6	2.5×2	70200	208000	2050	103	145	18	158	198	123	11	22	22
HZF5525-5	55	25	7.144	56.5	49.3	2.5×2	85000	238000	2120	105	147	18	187	227	125	11	22	22

* Sizes not listed in the Table are also available. Please consult NSK.
* "NSK K1" can be installed on other types not listed in the Table. Please consult NSK.
* Rigidity in the Table is theoretical value obtained from the elastic deformation between screw groove and ball when the preload is 10% of the dynamic load rating (Ca), and an axial load is applied to it. Refer to "Technical description" (B521) if preload differs from the conditions above, or when considering change in the deformation of the ball nut itself.

www.bergab.ru Берг АБ bergab@ya.ru Тел. (495)-228-06-21, факс (495) 223-3071

www.bergab.ru Берг АБ bergab@ya.ru Тел. (495)-228-06-21, факс (495) 223-3071

(7) Standardized stock ball screws WFA Series dimensiou table

Screw shaft dia. ϕ10, lead 4

Standard stock

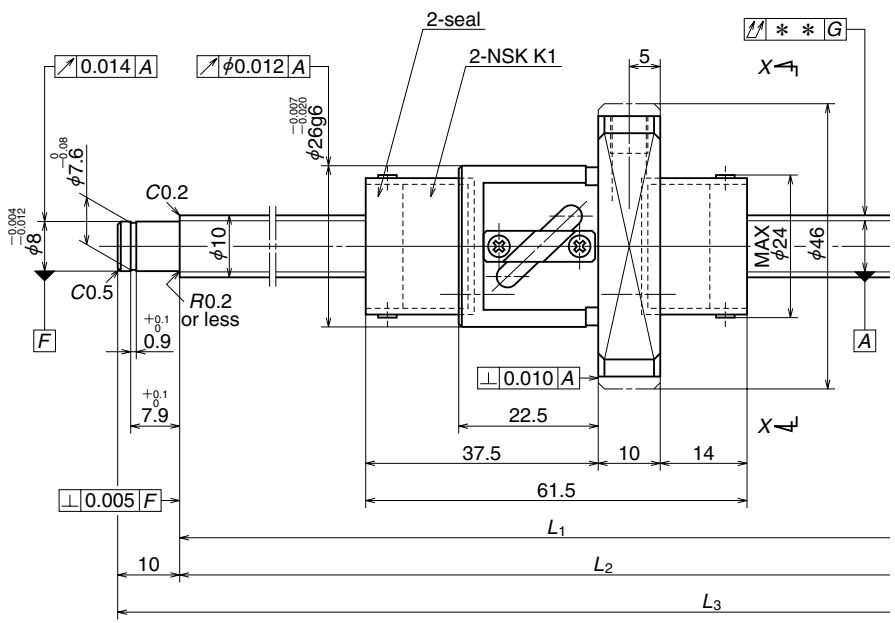

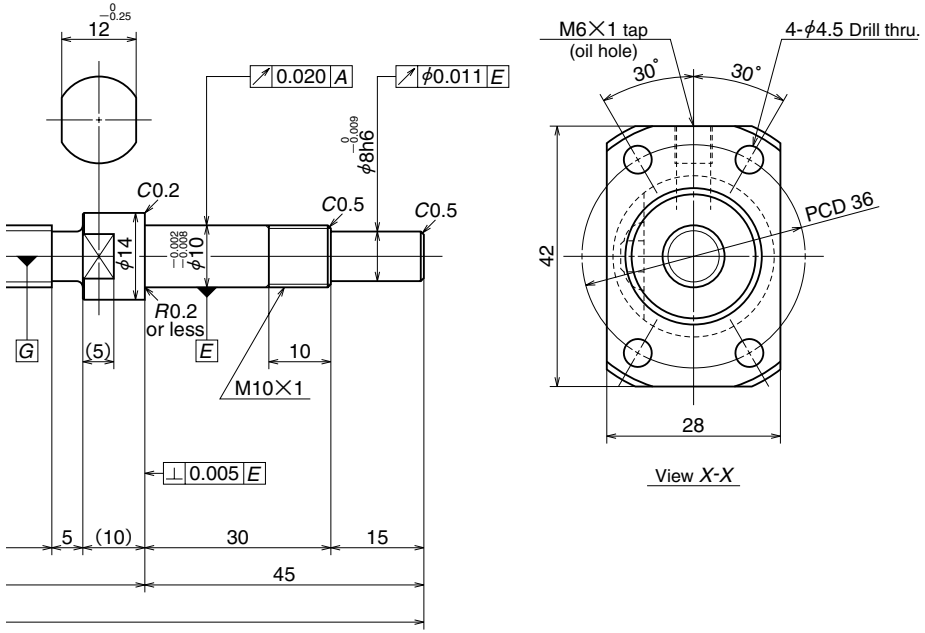

Unit: mm

Ball screw No.	Stroke		Screw shaft length		
	Nominal	Maximurm (L_1 — Nut length)	L_1	L_2	L_3
WFA1004C5Z-230K1	80	98.5	160	175	230
WFA1004C5Z-330K1	190	198.5	260	275	330
WFA1004C5Z-430K1	290	298.5	360	375	430

Note: 1. We recommend using the following NSK Support Units.
WBK10-01A (Fixed support side, square type), WBK10S-01 (Simple support side), and WBK10-11 (Fixed support side, round type

Unit: mm

Lead accuracy			Shaft run out**	Mass (kg)
T	e_p	υ_u		
0	0.020	0.018	0.045	0.28
0	0.023	0.018	0.060	0.33
0	0.025	0.020	0.080	0.39

Ball screw specifications	
Shaft dia. x tead/Direction of turn	10×4 / Right
Ball recirculation	Return tube
Ball dia.	2.000
Effective turns of balls	2.5×1
Accuracy grade/Axial play	C5 / Z
Basic dynamic load rating (N)	1730
Basic static load rating (N)	2230
Axial play	0
Dynamic friction torque (N·cm)	0.2～3.3*
Spacer ball	Yes
Factory packed grease	NSK Grease PS2

* Indicates torque control value of the ball screw. Also, torque increases approximately 0.5N•cm due to NSK K1.

www.bergab.ru Берг АБ bergab@ya.ru Тел. (495)-228-06-21, факс (495) 223-3071

www.bergab.ru Берг АБ bergab@ya.ru Тел. (495)-228-06-21, факс (495) 223-3071

Screw shaft dia. ϕ12, lead 5

Standard stock

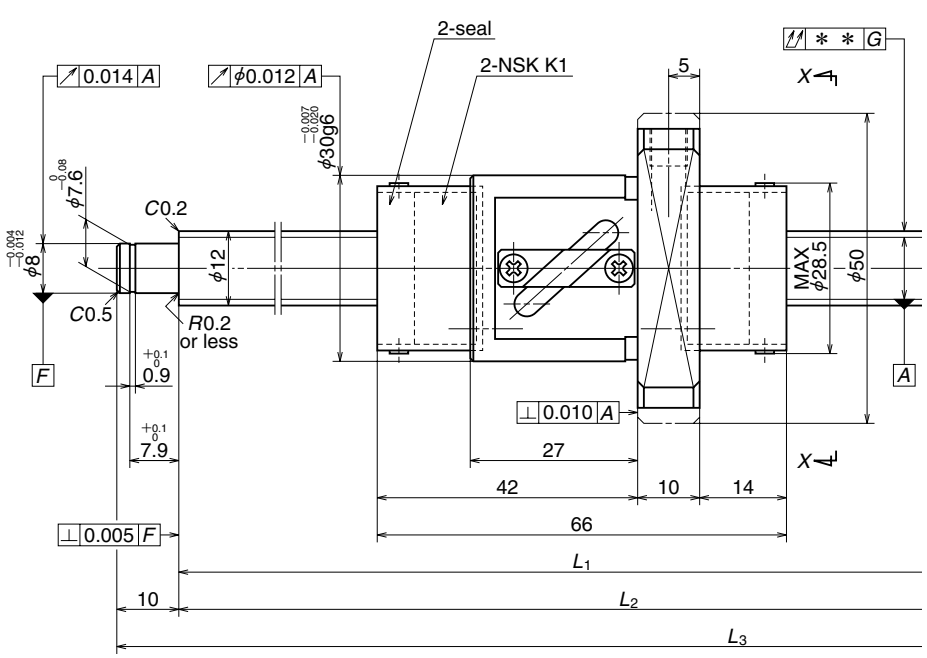

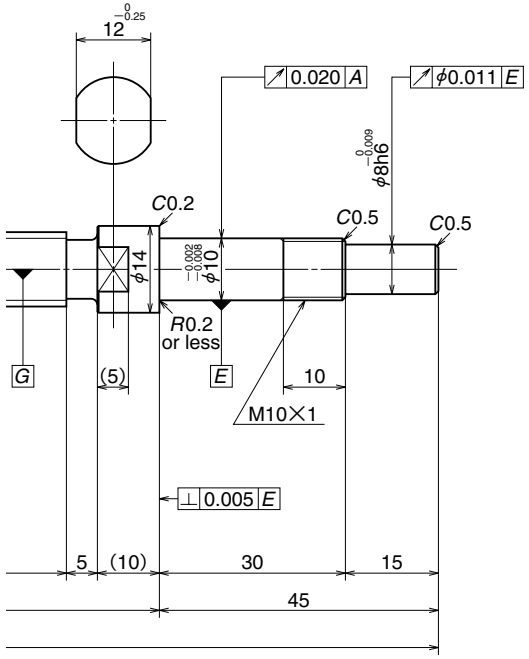

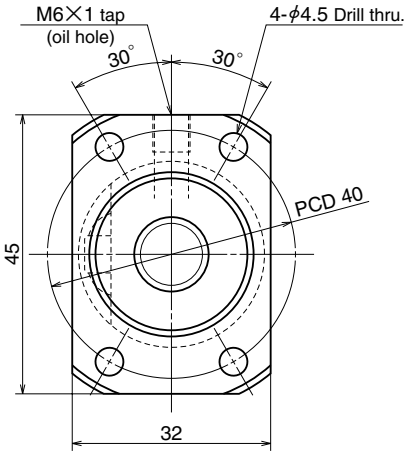

Unit: mm

Ball screw No.	Stroke		Screw shaft length		
	Nominal	Maximurm (L_1 — Nut length)	L_1	L_2	L_3
WFA1205C5Z-230K1	80	94	160	175	230
WFA1205C5Z-380K1	230	244	310	325	380
WFA1205C5Z-580K1	430	444	510	525	580

Note: 1. We recommend using the following NSK Support Units.
WBK10-01A (Fixed support side, square type), WBK10S-01 (Simple support side), and WBK10-11 (Fixed support side, round type

Unit: mm

Lead accuracy			Shaft run out**	Mass (kg)
T	e_p	υ_u		
0	0.020	0.018	0.045	0.37
0	0.023	0.018	0.060	0.49
0	0.030	0.023	0.100	0.65

Ball screw specifications	
Shaft dia. x tead/Direction of turn	12×5 / Right
Ball recirculation	Return tube
Ball dia.	2.381 (3 / 32)
Effective turns of balls	2.5×1
Accuracy grade/Axial play	C5 / Z
Basic dynamic load rating (N)	2370
Basic static load rating (N)	3160
Axial play	0
Dynamic friction torque (N·cm)	0.4～4.9*
Spacer ball	Yes
Factory packed grease	NSK Grease PS2

* Indicates torque control value of the ball screw. Also, torque increases approximately 0.6N•cm due to NSK K1.

www.bergab.ru Берг АБ bergab@ya.ru Тел. (495)-228-06-21, факс (495) 223-3071

www.bergab.ru Берг АБ bergab@ya.ru Тел. (495)-228-06-21, факс (495) 223-3071

Screw shaft dia. ϕ12, lead 10

Standard stock

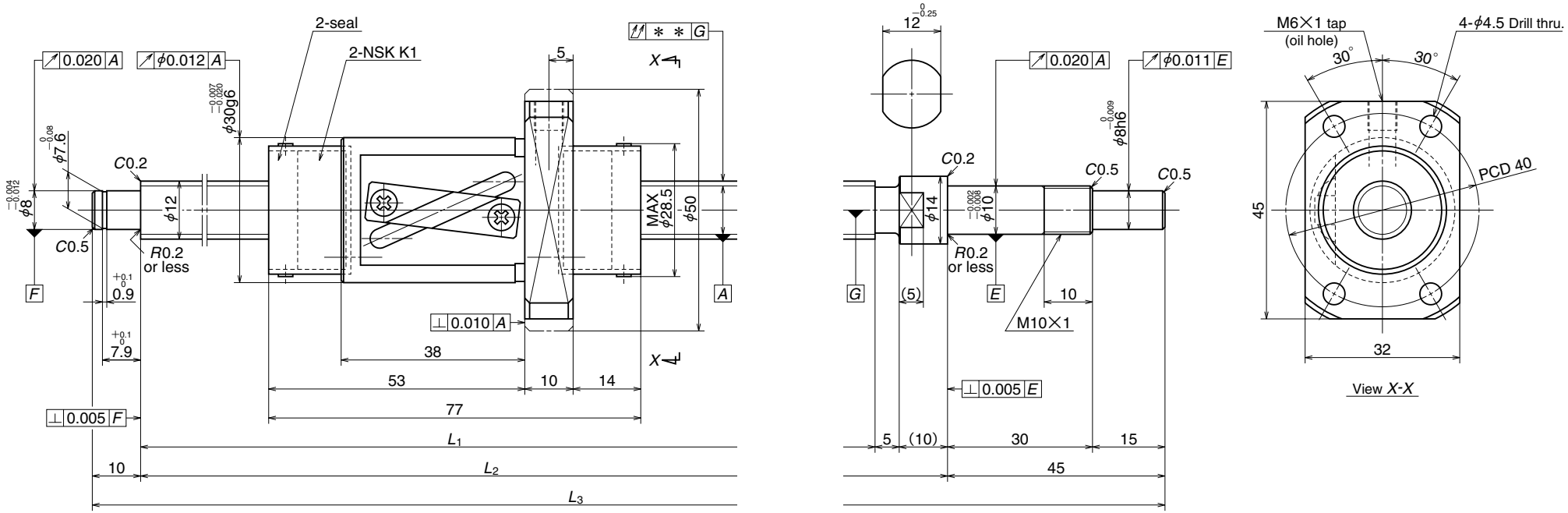

Unit: mm

Ball screw No.	Stroke		Screw shaft length		
	Nominal	Maximurm (L_1 — Nut length)	L_1	L_2	L_3
WFA1210C5Z-230K1	80	83	160	175	230
WFA1210C5Z-380K1	230	233	310	325	380
WFA1210C5Z-580K1	430	433	510	525	580

Note: 1. We recommend using the following NSK Support Units.
WBK10-01A (Fixed support side, square type), WBK10S-01 (Simple support side), and WBK10-11 (Fixed support side, round type

Unit: mm

Lead accuracy			Shaft run out**	Mass (kg)
T	e_p	υ_u		
0	0.020	0.018	0.045	0.42
0	0.023	0.018	0.060	0.55
0	0.030	0.023	0.100	0.72

Ball screw specifications

Shaft dia. x tead/Direction of turn	12×10 / Right
Ball recirculation	Return tube
Ball dia.	2.381 (3 / 32)
Effective turns of balls	2.5×1
Accuracy grade/Axial play	C5/Z
Basic dynamic load rating (N)	2360
Basic static load rating (N)	3240
Axial play	0
Dynamic friction torque (N·cm)	0.4～4.9*
Spacer ball	Yes
Factory packed grease	NSK Grease LR3

* Indicates torque control value of the ball screw. Also, torque increases approximately 0.6N•cm due to NSK K1.

www.bergab.ru Берг АБ bergab@ya.ru Тел. (495)-228-06-21, факс (495) 223-3071

www.bergab.ru Берг АБ bergab@ya.ru Тел. (495)-228-06-21, факс (495) 223-3071

Screw shaft dia. ϕ15, lead 10

Standard stock

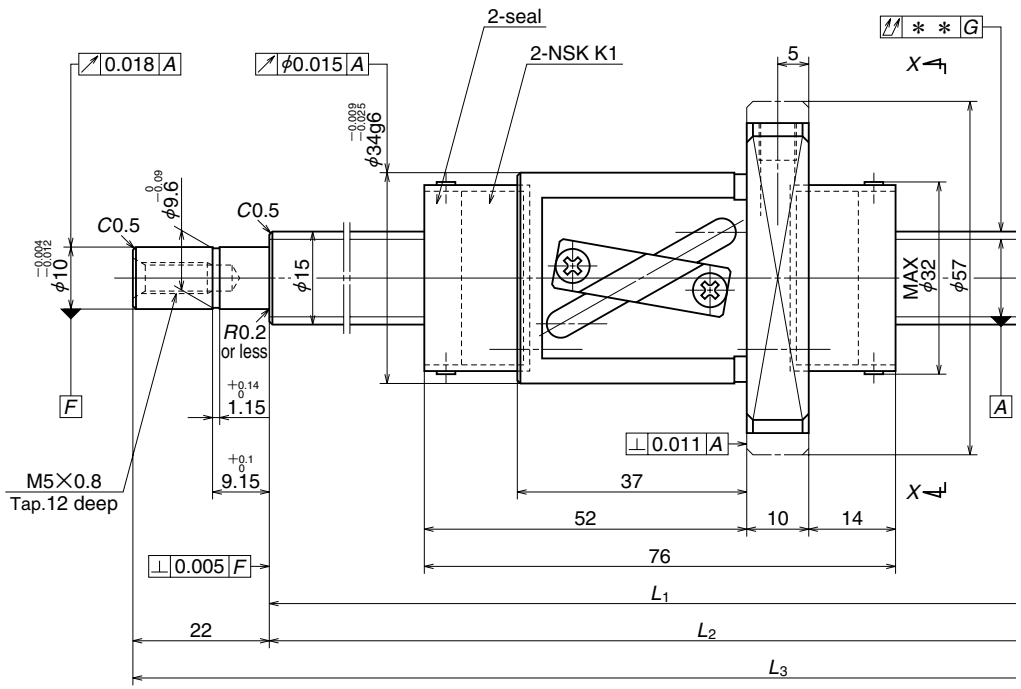

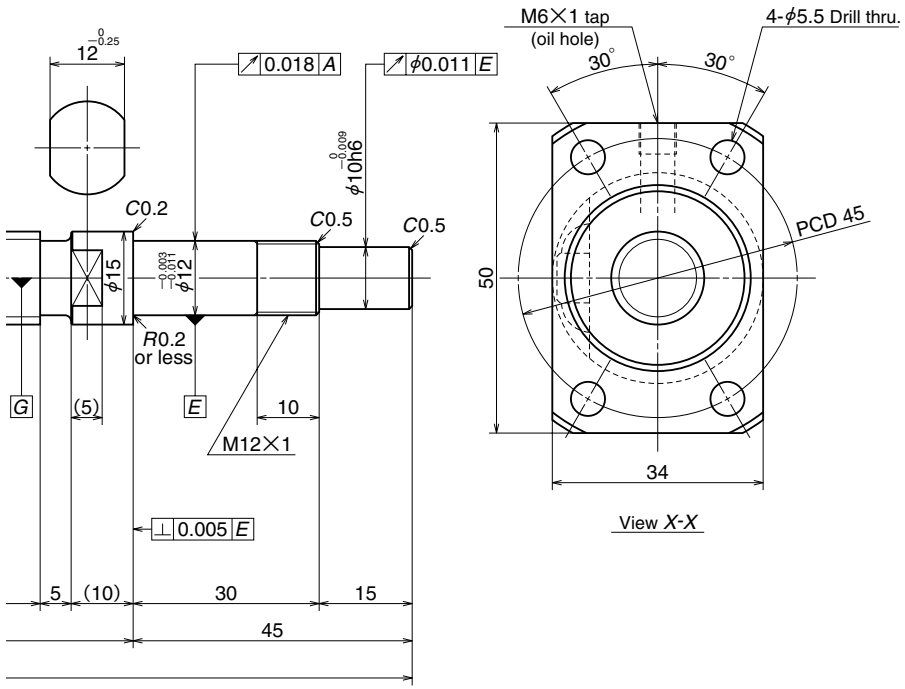

Unit: mm

Ball screw No.	Stroke		Screw shaft length		
	Nominal	Maximurm (L_1—Nut length)	L_1	L_2	L_3
WFA1510C5Z-371K1	210	213	289	304	372
WFA1510C5Z-771K1	600	613	689	704	771
WFA1510C5Z-1171K1	1000	1013	1089	1104	1171

Note: 1. We recommend using the following NSK Support Units.
WBK12-01A (Fixed support side, square type), WBK12S-01 (Simple support side), and WBK12-11 (Fixed support side, round type

Unit: mm

Lead accuracy			Shaft run out**	Mass (kg)
T	e_p	υ_u		
0	0.023	0.018	0.045	0.72
0	0.035	0.025	0.085	1.20
0	0.046	0.030	0.140	1.70

Ball screw specifications	
Shaft dia. x tead/Direction of turn	15×10 / Right
Ball recirculation	Return tube
Ball dia.	3.175 (1 / 8)
Effective turns of balls	2.5×1
Accuracy grade/Axial play	C5 / Z
Basic dynamic load rating (N)	4450
Basic static load rating (N)	6380
Axial play	0
Dynamic friction torque (N·cm)	0.9～5.4*
Spacer ball	Yes
Factory packed grease	NSK Grease LR3

* Indicates torque control value of the ball screw. Also, torque increases approximately 0.75N•cm due to NSK K1.

www.bergab.ru Берг АБ bergab@ya.ru Тел. (495)-228-06-21, факс (495) 223-3071

www.bergab.ru Берг АБ bergab@ya.ru Тел. (495)-228-06-21, факс (495) 223-3071

Screw shaft dia. ϕ15, lead 20

Standard stock

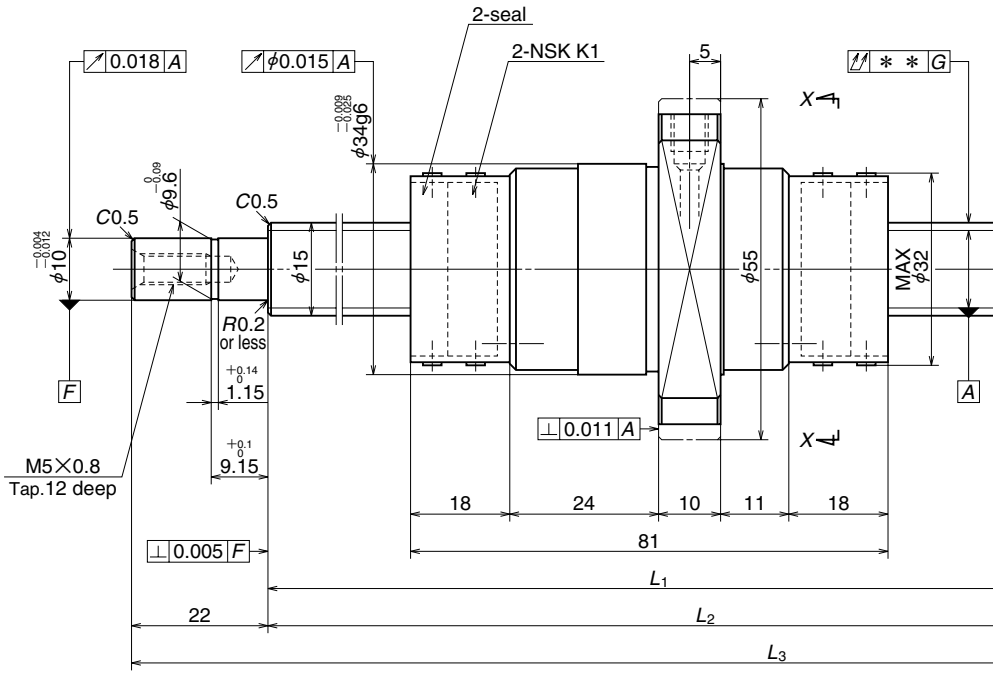

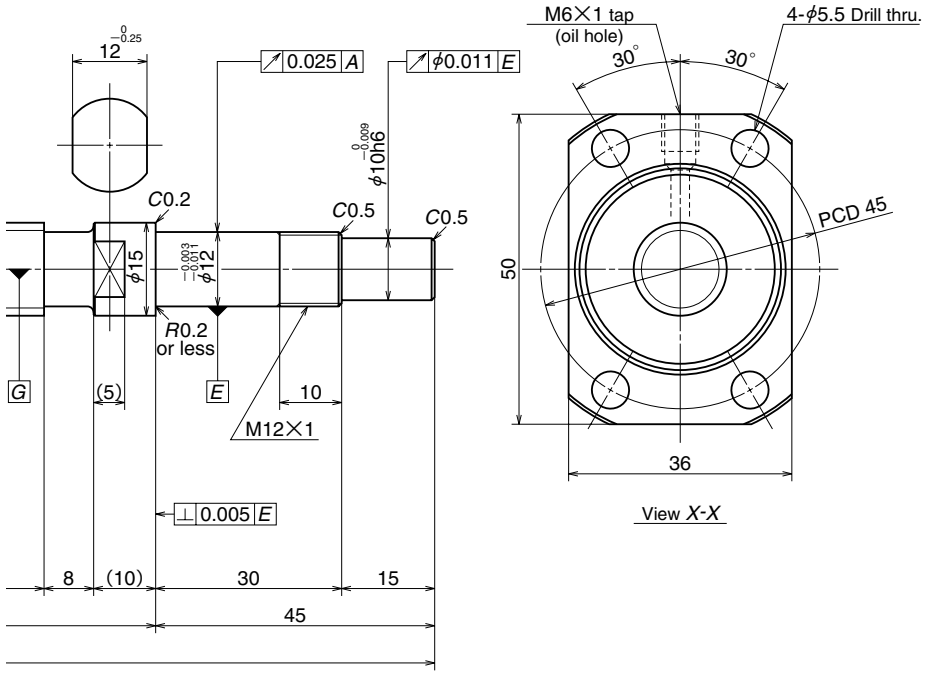

Unit: mm

Ball screw No.	Stroke		Screw shaft length		
	Nominal	Maximurm (L_1 — Nut length)	L_1	L_2	L_3
WFA1520C5Z-371K1	190	205	286	304	371
WFA1520C5Z-771K1	600	605	686	704	771
WFA1520C5Z-1171K1	1000	1005	1086	1104	1171

Note: 1. We recommend using the following NSK Support Units.
WBK12-01A (Fixed support side, square type), WBK12S-01 (Simple support side), and WBK12-11 (Fixed support side, round type

Unit: mm

Lead accuracy			Shaft run out**	Mass (kg)
T	e_p	υ_u		
0	0.023	0.018	0.045	0.75
0	0.035	0.025	0.085	1.30
0	0.046	0.030	0.140	1.80

Ball screw specifications	
Shaft dia. x tead/Direction of turn	15×20 / Right
Ball recirculation	End cap
Ball dia.	3.175 (1 / 8)
Effective turns of balls	1.7×1
Accuracy grade/Axial play	C5 / Z
Basic dynamic load rating (N)	3870
Basic static load rating (N)	5280
Axial play	0
Dynamic friction torque (N·cm)	1.6~7.4*
Spacer ball	Yes
Factory packed grease	NSK Grease LR3

* Indicates torque control value of the ball screw. Also, torque increases approximately 0.75N•cm due to NSK K1.

www.bergab.ru Берг АБ bergab@ya.ru Тел. (495)-228-06-21, факс (495) 223-3071

www.bergab.ru Берг АБ bergab@ya.ru Тел. (495)-228-06-21, факс (495) 223-3071

Screw shaft dia. ϕ20, lead 10

Standard stock

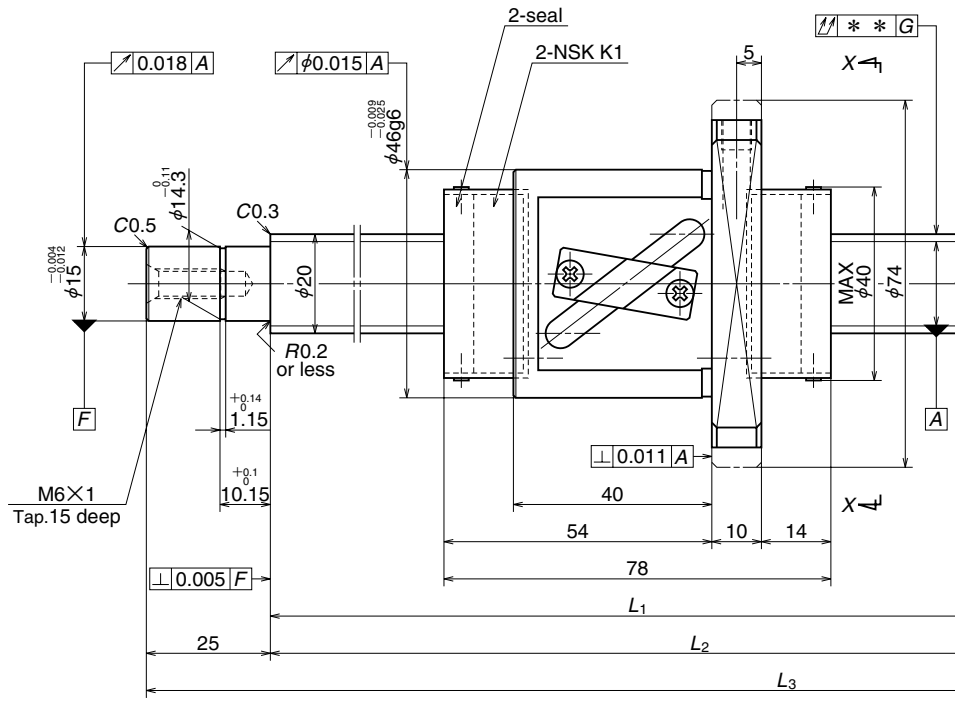

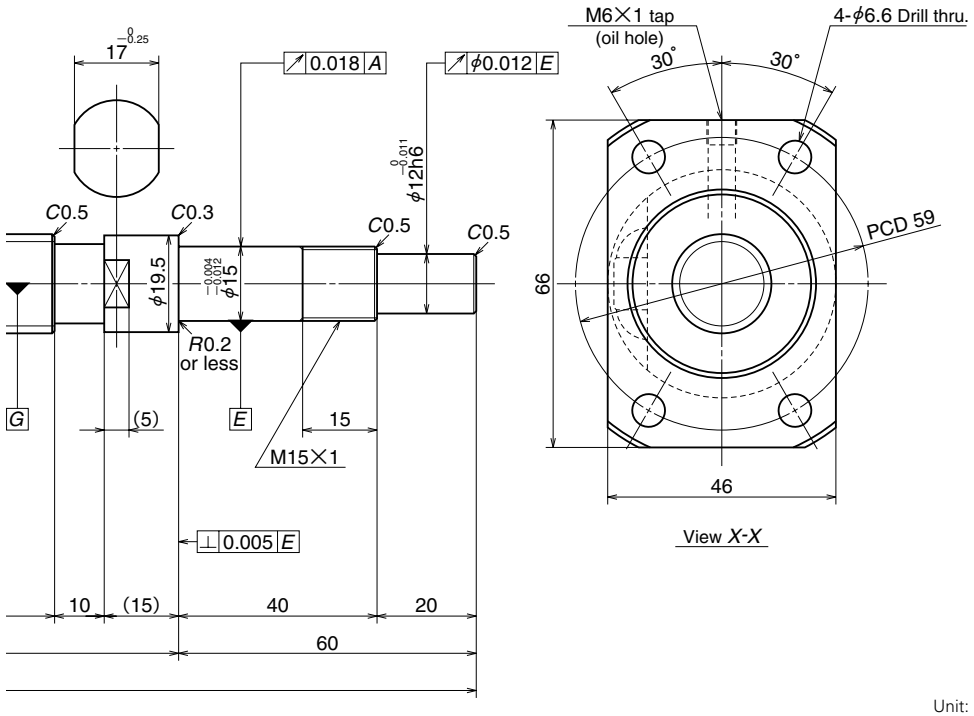

Unit: mm

Ball screw No.	Stroke		Screw shaft length		
	Nominal	Maximurm (L_1—Nut length)	L_1	L_2	L_3
WFA2010C5Z-599K1	400	411	489	514	599
WFA2010C5Z-899K1	700	711	789	814	899
WFA2010C5Z-1399K1	1200	1211	1289	1314	1399

Note: 1. We recommend using the following NSK Support Units.
WBK15-01A (Fixed support side, square type), WBK15S-01 (Simple support side), and WBK15-11 (Fixed support side, round type

Unit: mm

Lead accuracy			Shaft run out**	Mass (kg)
T	e_p	υ_u		
0	0.027	0.020	0.070	1.80
0	0.035	0.025	0.110	2.50
0	0.054	0.035	0.180	3.60

Ball screw specifications	
Shaft dia. x tead/Direction of turn	20×10 / Right
Ball recirculation	Return tube
Ball dia.	3.969 (5 / 32)
Effective turns of balls	2.5×1
Accuracy grade/Axial play	C5 / Z
Basic dynamic load rating (N)	6880
Basic static load rating (N)	10800
Axial play	0
Dynamic friction torque (N·cm)	2.0～8.3*
Spacer ball	Yes
Factory packed grease	NSK Grease LR3

* Indicates torque control value of the ball screw. Also, torque increases approximately 1.0N•cm due to NSK K1.

www.bergab.ru Берг АБ bergab@ya.ru Тел. (495)-228-06-21, факс (495) 223-3071

www.bergab.ru Берг АБ bergab@ya.ru Тел. (495)-228-06-21, факс (495) 223-3071

Screw shaft dia. ϕ20, lead 20

Standard stock

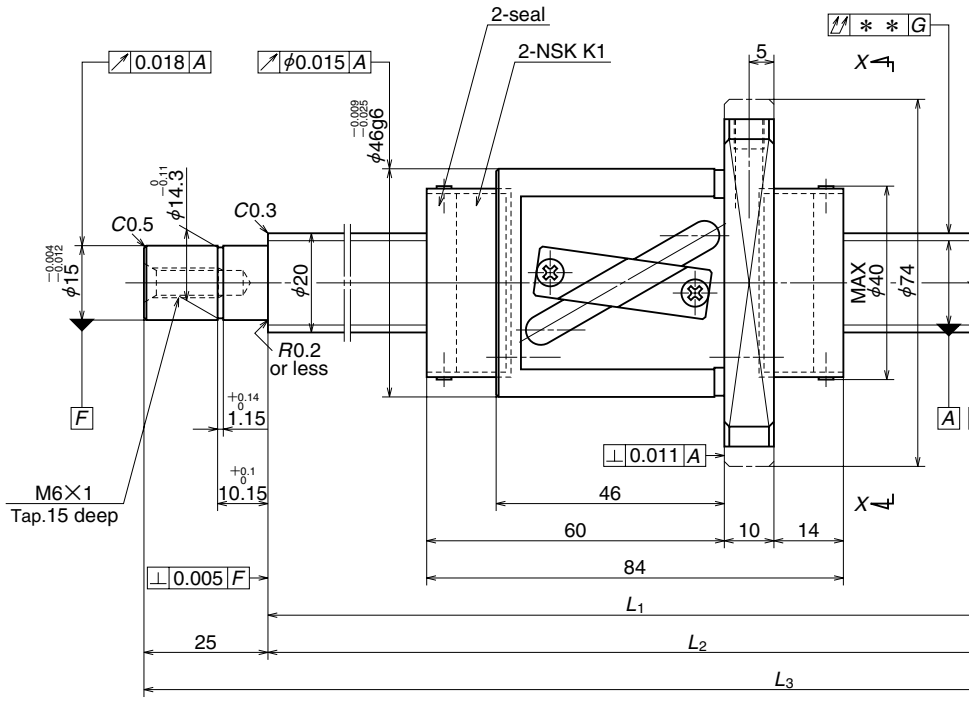

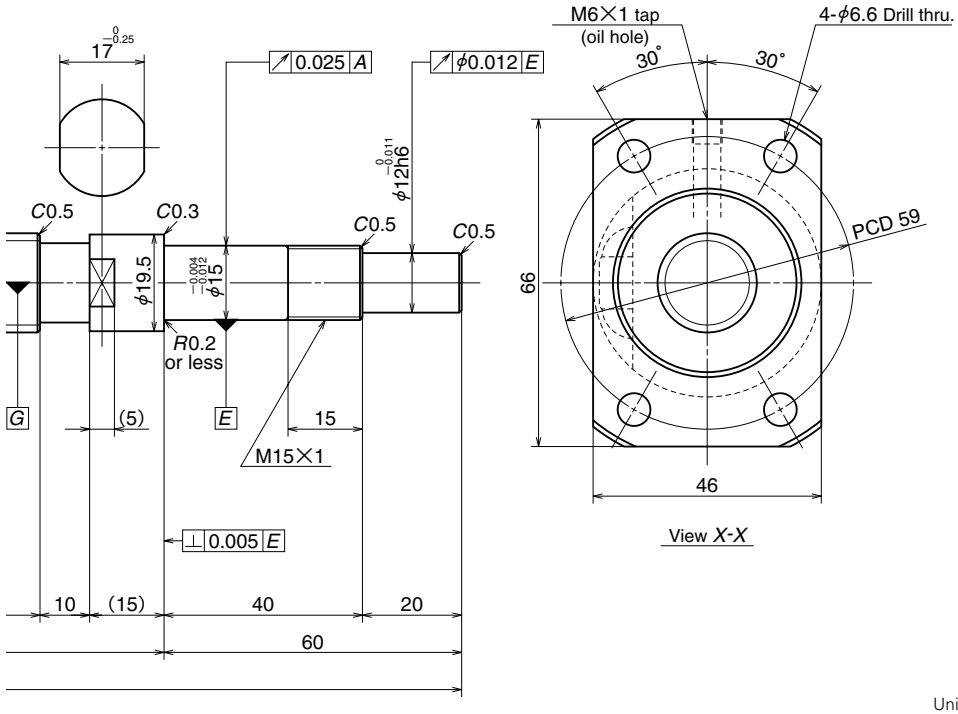

Unit: mm

Ball screw No.	Stroke		Screw shaft length		
	Nominal	Maximurm (L_1—Nut length)	L_1	L_2	L_3
WFA2020C5Z-820K1	600	626	710	735	820
WFA2020C5Z-1220K1	1000	1026	1110	1135	1220
WFA2020C5Z-1620K1	1400	1426	1510	1535	1620

Note: 1. We recommend using the following NSK Support Units.
WBK15-01A (Fixed support side, square type), WBK15S-01 (Simple support side), and WBK15-11 (Fixed support side, round type

Unit: mm

Lead accuracy			Shaft run out**	Mass (kg)
T	e_p	υ_u		
0	0.035	0.025	0.110	2.40
0	0.046	0.030	0.140	3.40
0	0.054	0.035	0.180	4.30

Ball screw specifications

Shaft dia. x tead/Direction of turn	20×20 / Right
Ball recirculation	Return tube
Ball dia.	3.969 (5 / 32)
Effective turns of balls	1.5×1
Accuracy grade/Axial play	C5 / Z
Basic dynamic load rating (N)	5370
Basic static load rating (N)	8450
Axial play	0
Dynamic friction torque (N·cm)	2.4～9.8*
Spacer ball	Yes
Factory packed grease	NSK Grease LR3

* Indicates torque control value of the ball screw. Also, torque increases approximately 1.0N•cm due to NSK K1.

www.bergab.ru Берг АБ bergab@ya.ru Тел. (495)-228-06-21, факс (495) 223-3071

www.bergab.ru Берг АБ bergab@ya.ru Тел. (495)-228-06-21, факс (495) 223-3071

B-I-8.2 NSK S1™ Series Precision Ball Screw

NSK S1™ Series ball screws improve the level of softness in noise tone of driving mechanism. Quieter and smoother operation provides the machines that are both environmentally friendly and compatible with a variety of working environments.

Patent pending

NSK S1™ Series ball screws are one of epoch making products that have attained low noise, softer noise tone and smooth operation by incorporating resin retaining pieces between balls to avert their jamming.

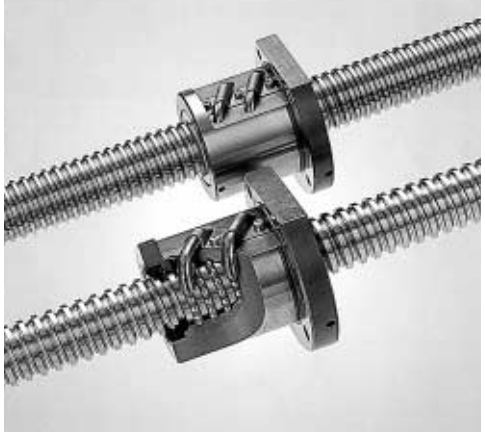

(1) Features

① Low noise • Softer noise tone

Incorporating the retaining pieces avoids collision between balls and thus, it lowers noise level and attains improvement on noise tone (softer to human ears) and low vibration.

Test sample	Shaft diameter	: ø 40 mm
	Lead	: 10 mm
	Ball diameter	: 6.35 mm
Test conditions	Oil lubrication (ISO VG68)	
	Set the microphone 400 mm above the ball screw.	

Fig. I-8•1 Noise level

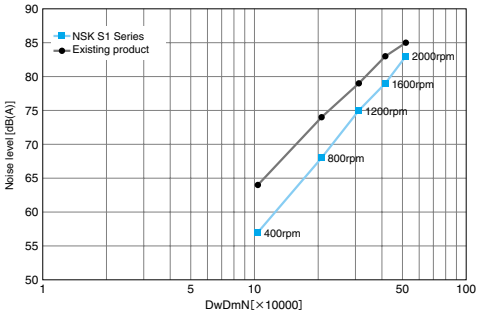

② Smooth operation

Suppression of jamming of balls improves dynamic torque characteristics and thereby, smoother and more stable operation of machine is possible. This feature is especially beneficial to very slow or oscillating operation.

Fig. I-8•2 Smooth operational characteristics

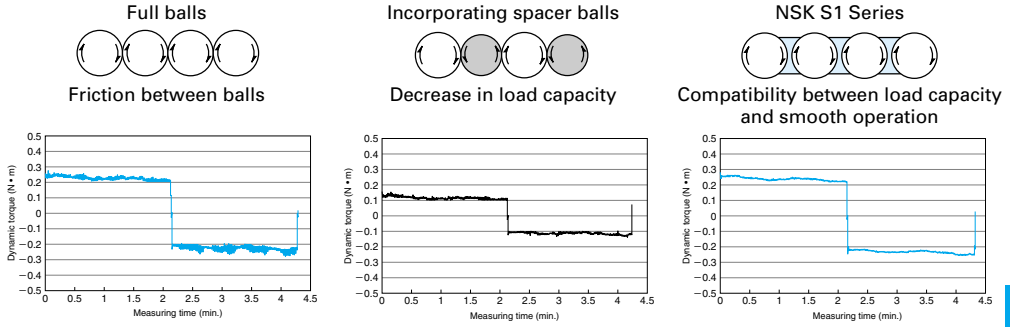

③ High load capacity • High rigidity

Conventionally, for fields requiring smooth operation, spacer balls were inserted among load carrying balls at a certain rate. However, this method results in a decrease of the load rating and rigidity due to the decrease in the number of steel balls that carry the load.

Decrease in number of load balls due to insertion of retaining pieces are kept in 10 % approximately and thus, load capacity and rigidity of S1 Series ball screws are higher than the ball screws that incorporate spacer balls.

④ Superb vibration characteristics

Test sample	Shaft diameter	: ø 40 mm
	Lead	: 10 mm
	Ball diameter	: 6.35 mm
Test conditions	Oil lubrication (VG68)	

⑤ Dimensional interchangeability

S1 Series ball screws have interchangeability in installation with the existing Series because their ball nuts have the same external dimensions.

Fig. I-8•3 Comparison of vibration

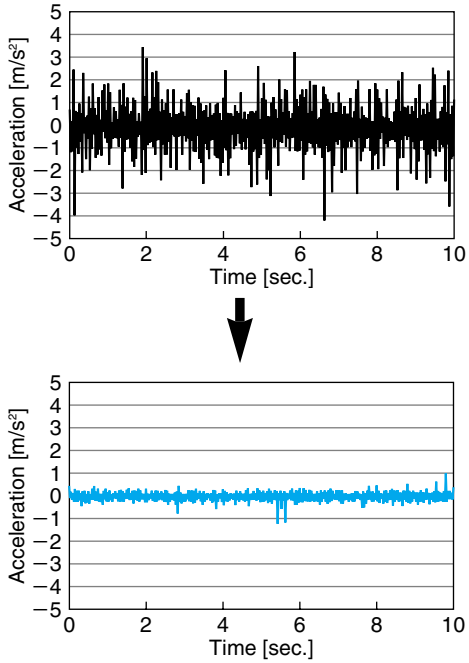

www.bergab.ru Берг АБ bergab@ya.ru Тел. (495)-228-06-21, факс (495) 223-3071

www.bergab.ru Берг АБ bergab@ya.ru Тел. (495)-228-06-21, факс (495) 223-3071

(2) Specifications

● Accuracy

Applicable accuracy grades are the C5 or better that are specified.

● Axial play

Zero axial play, which is equivalent specification to the oversize ball preload, is the standard.

● Method of ball recirculation

Ball recirculation method is ball return tube type.

* Options

Please consult with NSK if you require a ball screw that is out of the size of the S1 Series or installation of NSK K1 lubrication unit.

(3) Specification number

Specification number consists of code and number fields, which represent main specifications, and this is used for communication between a user and NSK prior to finalize the specifications.

PFT 25 06 - 5 - S1 L C3 Z - 750 / 1000

- Model
- Screw shaft diameler (mm)
- Lead (mm)
- Effective turns of balls (Turns x Circuits)
- S1 Series
- Direction of thread turn No code : right. L : left
- Accuracy
- Axial play code Z : Axial play 0
- Length of the threaded section (mm)
- Overall screw shaft length (mm)

4) Reference number

Reference number shall be set to individual NSK ball screws when its specifications are finalized, and it is indicated on its specification drawing. Please specify the number for identification of the product when ordering.

W 25 07 - ※ L P SP - C3 Z 6

- Ball screw code
- shaft dia. (mm)
- Length of the threaded section (in the unit of 100mm)
- Design No.
- Direction of thread turn No code : right. L : left
- Preload code P : Oversize ball preload
- S1 Series
- Accuracy
- Axial play code Z : Axial play 0
- Lead (mm)

5) Application

● Application that requires low noise level and low vibration

Measuring equipment, pattern generator, medical equipment, office equipment, etc.

● Application that requires smooth motion

Electric wire cutting discharge machine, scanner, stepper, etc.

● Application that requires higher load carrying capacity and rigidity

Compact machinery that requires high load capacity and rigidity

Precautions for handling

1. Temperature range for use••••••••• Maximum temperature : 50°C.
   ••••••••• Momentary maximum temperature in use : 80°C.
2. Environment •••••••••••••••••••••••••• We recommend using NSK S1 Series in clean environment to demonstrate its performance fully.

www.bergab.ru Берг АБ bergab@ya.ru Тел. (495)-228-06-21, факс (495) 223-3071

www.bergab.ru Берг АБ bergab@ya.ru Тел. (495)-228-06-21, факс (495) 223-3071

6) S1™ Series dimensiontable.

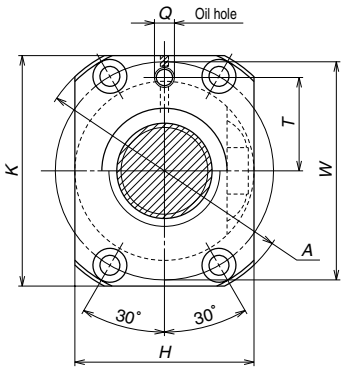

Rectangular shape
Screw shaft dia. d≦16mm

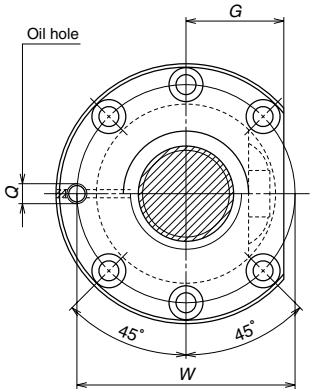

Circular shape II (semi-circular)

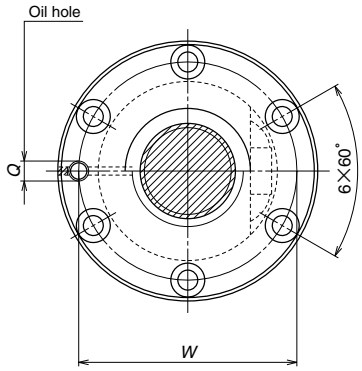

Circular shape I

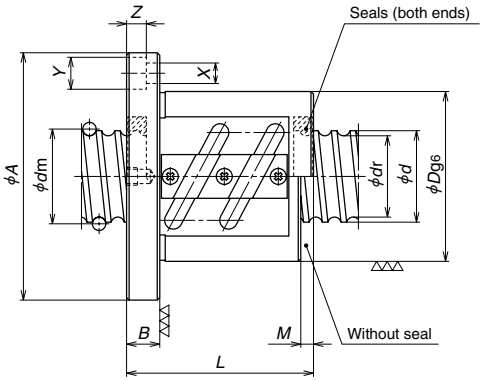

Unit: mm

Model No.	Shaft dia. d	Lead l	Ball dia. D_w	Ball circle dia. d_m	Root dia. d_r	Effective turns of balls Turns × Circuits	Basic load rating (N) Dynamic C_a	Static C_{0a}
PFT 1605-3-S1	16	5	3.175	16.5	13.2	1.5×2	8210	14900
PFT 1605-5-S1						2.5×2	12700	25000
PFT 1606-2.5-S1		6	3.175	16.5	13.2	2.5×1	7020	12500
PFT 2005-3-S1	20	5	3.175	20.5	17.2	1.5×2	8970	18500
PFT 2005-5-S1						2.5×2	13900	31500
PFT 2006-2.5-S1		6	3.969	20.5	16.4	2.5×1	10500	19500
PFT 2006-3-S1						1.5×2	12300	23200
PFT 2008-2.5-S1		8	3.969	20.5	16.4	2.5×1	10500	19500
PFT 2505-3-S1	25	5	3.175	25.5	22.2	1.5×2	10100	23600
PFT 2505-5-S1						2.5×2	15700	39500
PFT 2506-3-S1		6	3.969	25.5	21.4	1.5×2	13400	28900
PFT 2506-5-S1						2.5×2	20800	48200

Model No.	Axial rigidity K (N/μm)	Ball nut dimensions D	A	G	H	K	B	L	M	W	X	Y	Z	Q	T
PFT 1605-3-S1	271	40	63	—	40	55	11	52	—	51	5.5	9.5	5.5	M6×1	20
PFT 1605-5-S1	447							57							
PFT 1606-2.5-S1	229	40	63	—	40	55	11	44	—	51	5.5	9.5	5.5	M6×1	20
PFT 2005-3-S1	320	44	67	26	—	—	11	52	3	55	5.5	9.5	5.5	M6×1	—
PFT 2005-5-S1	532							56							
PFT 2006-2.5-S1	283	48	71	27	—	—	11	44	3	59	5.5	9.5	5.5	M6×1	—
PFT 2006-3-S1	335							56							
PFT 2008-2.5-S1	284	48	75	28	—	—	13	54	5	61	6.6	11	6.5	M6×1	—
PFT 2505-3-S1	389	50	73	28	—	—	11	52	3	61	5.5	9.5	5.5	M6×1	—
PFT 2505-5-S1	639							55							
PFT 2506-3-S1	396	53	76	29	—	—	11	56	3	64	5.5	9.5	5.5	M6×1	—
PFT 2506-5-S1	655							62							

Remarks 1. Flanges for shaft diameter of 16 mm and smaller are rectangular. There are Circular I and Circular II for those with 20 mm and larger. Select a flange shape which is suitable for the nut installation space.
2. If there is no seal, the nut length is shorter by the length of "M" than those with a seal.
3. Right turn screw is standard. "L" is added to the end of the model code for left turn screw.
4. Load balls and retaining pieces are installed at a ratio of 1:1. Therefore, the basic load rating differs from that of other series.
5. Rigidity in the Table is theoretical value obtained from the elastic deformation between screw groove and ball when the preload is 5% of the basic dynamic load rating (C_a), and the axial load is applied to it. Refer to "Technical description" (Page B521) if preload differs from the conditions above, or when considering change in the deformation of the ball nut itself.

www.bergab.ru Берг АБ bergab@ya.ru Тел. (495)-228-06-21, факс (495) 223-3071

www.bergab.ru Берг АБ bergab@ya.ru Тел. (495)-228-06-21, факс (495) 223-3071

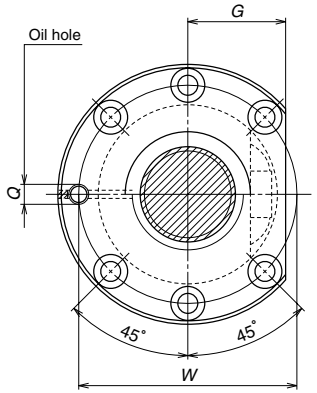

Circular shape II (semi-circular)

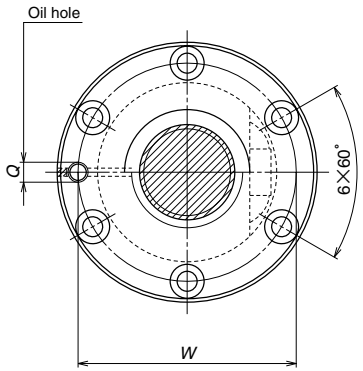

Circular shape I

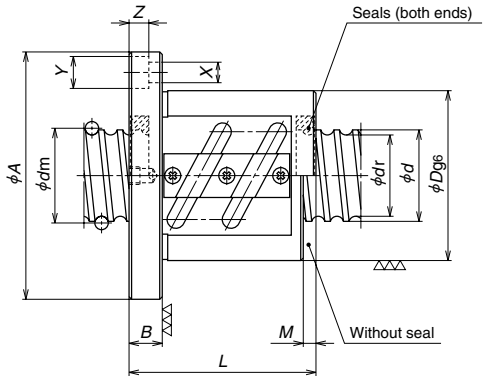

B
462

Unit: mm

Model No.	Shaft dia. d	Lead l	Ball dia. D_w	Ball circle dia. d_m	Root dia. d_r	Effective turns of balls Turns × Circuits	Basic load rating (N) Dynamic C_a	Static C_{0a}	Axial rigidity K (N/μm)	Ball nut dimensions D	A	G	B	L	M	W	X	Y	Z	Q
PFT 2508-2.5-S1	25	8	4.762	25.5	20.5	2.5×1	14500	28900	343	58	85	32	13	56	5	71	6.6	11	6.5	M6×1
PFT 2508-3-S1						1.5×2	17000	35000	409					69						
PFT 2510-2.5-S1		10	4.762	25.5	20.5	2.5×1	14500	28900	343	58	85	32	15	67	8	71	6.6	11	6.5	M6×1
PFT 2510-3-S1						1.5×2	17000	35000	410					81						
PFT 2805-5-S1	28	5	3.175	28.5	25.2	2.5×2	16200	43900	696	55	85	31	12	56	3	69	6.6	11	6.5	M6×1
PFT 2806-3-S1		6	3.175	28.5	25.2	1.5×2	10400	26500	425	55	85	31	12	57	3	69	6.6	11	6.5	M6×1
PFT 2806-5-S1						2.5×2	16200	43900	696					63						
PFT 2810-2.5-S1		10	4.762	28.5	23.5	2.5×1	15500	32200	380	60	94	36	15	68	7	76	9	14	8.5	M6×1
PFT 2810-3-S1						1.5×2	18100	38400	454					82						
PFT 3205-3-S1	32	5	3.175	32.5	29.2	1.5×2	11100	30100	473	58	85	32	12	53	3	71	6.6	11	6.5	M6×1
PFT 3205-5-S1						2.5×2	17300	50500	770					56						
PFT 3205-7.5-S1						2.5×3	24500	75700	1130					71						
PFT 3206-3-S1		6	3.969	32.5	28.4	1.5×2	15000	38000	488	62	89	34	12	57	3	75	6.6	11	6.5	M6×1
PFT 3206-5-S1						2.5×2	23300	62900	794					63						
PFT 3208-3-S1		8	4.762	32.5	27.5	1.5×2	19100	44900	497	66	100	38	15	71	5	82	9	14	8.5	M6×1
PFT 3208-5-S1						2.5×2	29600	74300	806					82						
PFT 3210-2.5-S1		10	6.35	33.0	26.4	2.5×1	24400	50000	440	74	108	41	15	70	7	90	9	14	8.5	M6×1
PFT 3210-3-S1						1.5×2	28600	59400	521					87						
PFT 3210-5-S1						2.5×2	44400	99900	853					100						
PFT 3212-2.5-S1		12	6.35	33.0	26.4	2.5×1	24400	50000	440	74	108	41	18	81	9	90	9	14	8.5	M6×1
PFT 3212-3-S1						1.5×2	28600	59400	522					97						

Remarks 1. Circular shape I and II are provided for flange shape. Select one of them suites for nut installation space.
2. If there is no seal, the nut length is shorter by the length of "M" than those with a seal.
3. The right turn screw is standard. "L" is added to the end of the model code for left turn screw.
4. Load balls and retaining pieces are installed at a ratio of 1:1. Therefore, the basic load rating differs from that of other series.
5. Rigidity in the Table is theoretical value obtained from the elastic deformation between screw groove and ball when the preload is 5% of the basic dynamic load rating (C_a), and the axial load is applied to it. Refer to "Technical description" (Page B521) if preload differs from the conditions above, or when considering change in the deformation of the ball nut itself.

www.bergab.ru Берг АБ bergab@ya.ru Тел. (495)-228-06-21, факс (495) 223-3071

www.bergab.ru Берг АБ bergab@ya.ru Тел. (495)-228-06-21, факс (495) 223-3071

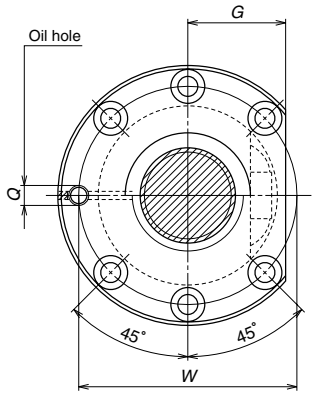

Circular shape II (semi-circular)

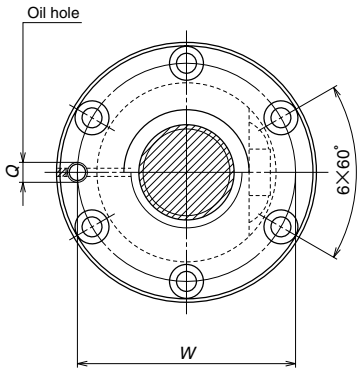

Circular shape I

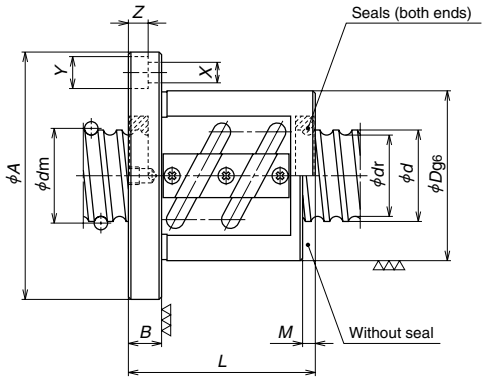

Unit: mm

Model No.	Shaft dia. d	Lead l	Ball dia. D_w	Ball circle dia. d_m	Root dia. d_r	Effective turns of balls Turns × Circuits	Basic load rating (N) Dynamic C_a	Static C_{0a}	Axial rigidity K (N/μm)	Ball nut dimensions D	A	G	B	L	M	W	X	Y	Z	Q
PFT 3605-5-S1	36	5	3.175	36.5	33.2	2.5×2	18300	57000	849	65	100	38	15	59	3	82	9	14	8.5	M6×1
PFT 3605-7.5-S1						2.5×3	25900	85500	1250					74						
PFT 3606-5-S1		6	3.969	36.5	32.4	2.5×2	24700	70900	871	65	100	38	15	66	3	82	9	14	8.5	M6×1
PFT 3606-7.5-S1						2.5×3	34900	106000	1280					84						
PFT 3610-2.5-S1		10	6.35	37.0	30.4	2.5×1	25100	55800	476	75	120	45	18	73	7	98	11	17.5	11	M6×1
PFT 3610-3-S1						1.5×2	29400	68100	573					90						
PFT 3610-5-S1						2.5×2	45600	112000	921					103						
PFT 4005-3-S1	40	5	3.175	40.5	37.2	1.5×2	12200	38100	566	67	101	39	15	56	3	83	9	14	8.5	Rc1/8
PFT 4005-5-S1						2.5×2	18900	63500	920					59						
PFT 4005-7.5-S1						2.5×3	26700	95300	1350					74						
PFT 4006-5-S1		6	3.969	40.5	36.4	2.5×2	25900	78800	950	70	104	40	15	66	3	86	9	14	8.5	Rc1/8
PFT 4006-7.5-S1						2.5×3	36600	118000	1390					84						
PFT 4008-3-S1		8	4.762	40.5	35.5	1.5×2	21300	56300	595	74	108	41	15	71	5	90	9	14	8.5	Rc1/8
PFT 4008-5-S1						2.5×2	33000	93900	969					82						
PFT 4010-2.5-S1		10	6.35	41.0	34.4	2.5×1	26700	63100	524	82	124	47	18	73	7	102	11	17.5	11	Rc1/8
PFT 4010-3-S1						1.5×2	31200	74000	615					90						
PFT 4010-5-S1						2.5×2	48500	126000	1010					103						
PFT 4510-2.5-S1	45	10	6.35	46.0	39.4	2.5×1	28000	70400	571	88	132	50	18	73	7	110	11	17.5	11	Rc1/8
PFT 4510-5-S1						2.5×2	50900	141000	1100					103						
PFT 4510-7.5-S1						2.5×3	72100	211000	1620					133						
PFT 5005-3-S1	50	5	3.175	50.5	47.2	1.5×2	13300	47600	670	80	114	43	15	58	3	96	9	14	8.5	Rc1/8
PFT 5005-4.5-S1						1.5×3	18800	71400	990					68						
PFT 5006-5-S1		6	3.969	50.5	46.4	2.5×2	28200	99300	1130	84	118	45	15	68	3	100	9	14	8.5	Rc1/8
PFT 5006-7.5-S						2.5×3	40000	149000	1670					86						
PFT 5008-5-S1		8	4.762	50.5	45.5	2.5×2	36400	118000	1160	87	129	49	18	85	5	107	11	17.5	11	Rc1/8
PFT 5008-7.5-S1						2.5×3	51500	178000	1700					109						
PFT 5010-2.5-S1		10	6.35	51.0	44.4	2.5×1	30100	79100	629	93	135	51	18	73	7	113	11	17.5	11	Rc1/8
PFT 5010-5-S1						2.5×2	54600	158000	1210					103						
PFT 5010-7.5-S1						2.5×3	77400	237000	1790					133						

Remarks 1. Circular shape I and II are provided for flange shape. Select one of them suites for nut installation space.
2. If there is no seal, the nut length is shorter by the length of "M" than those with a seal.
3. The right turn screw is standard. "L" is added to the end of the model code for left turn screw.
4. Load balls and retaining pieces are installed at a ratio of 1:1. Therefore, the basic load rating differs from that of other series.
5. Rigidity in the Table is theoretical value obtained from the elastic deformation between screw groove and ball when the preload is 5% of the basic dynamic load rating (C_a), and the axial load is applied to it. Refer to "Technical description" (Page B521) if preload differs from the conditions above, or when considering change in the deformation of the ball nut itself.

www.bergab.ru Берг АБ bergab@ya.ru Тел. (495)-228-06-21, факс (495) 223-3071

www.bergab.ru Берг АБ bergab@ya.ru Тел. (495)-228-06-21, факс (495) 223-3071

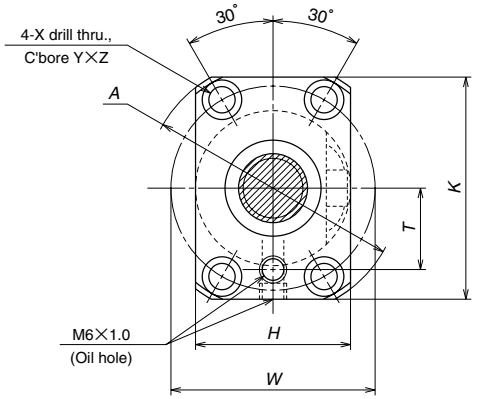

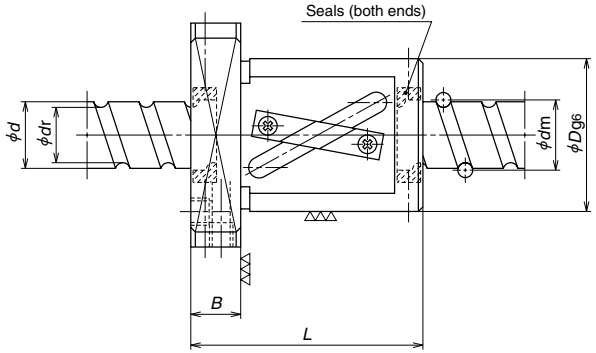

Unit: mm

Model No.	Shaft dia. d	Lead l	Ball dia. D_w	Ball circle dia. d_m	Root dia. d_r	Effective turns of balls Turns × Circuits	Basic load rating (N) Dynamic C_a	Static C_{0a}
LPFT 1616-1.5-S1	16	16	3.175	16.75	13.4	1.5×1	4520	7440
LPFT 2010-2.5-S1	20	10	3.969	21.0	16.9	2.5×1	10500	19500
LPFT 2016-2.5-S1		16	3.969	21.0	16.9	2.5×1	10500	19500
LPFT 2020-1.5-S1		20	3.969	21.0	16.9	1.5×1	6750	11600

Axial rigidity K (N/μm)	Ball nut dimensions D	A	H	K	B	L	W	X	Y	Z	T
147	40	63	40	55	12	56	51	5.5	9.5	5.5	17
289	46	74	46	66	13	54	59	6.6	11	6.5	24
291	46	74	46	66	13	72	59	6.6	11	6.5	24
180	46	74	46	66	13	63	59	6.6	11	6.5	24

Remarks 1.The ball nut is equipped with seals as the standard feature. Removing the seals does not change external dimensions of ball nut.
2. The right turn screw is standard. "L" is added to the end of the model code for left turn screw.

4. Load balls and retaining pieces are installed at a ratio of 1:1. Therefore, the basic load rating differs from that of other series.
5. Rigidity in the Table is theoretical value obtained from the elastic deformation between screw groove and ball when the preload is 5% of the basic dynamic load rating (C_a), and the axial load is applied to it. Refer to "Technical description" (Page B521) if preload differs from the conditions above, or when considering change in the deformation of the ball nut itself.

www.bergab.ru Берг АБ bergab@ya.ru Тел. (495)-228-06-21, факс (495) 223-3071

www.bergab.ru Берг АБ bergab@ya.ru Тел. (495)-228-06-21, факс (495) 223-3071

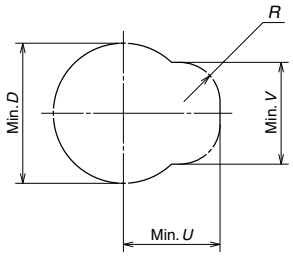

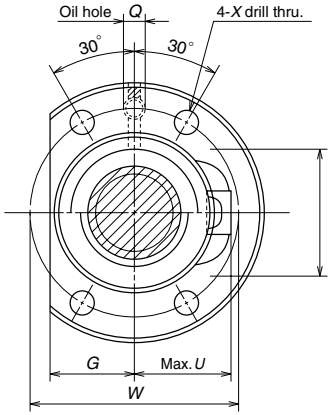

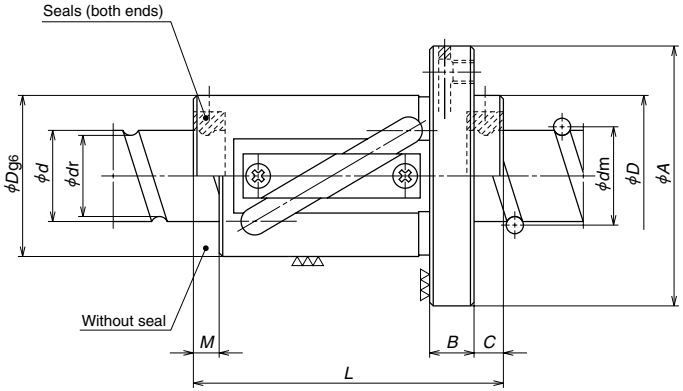

Unit: mm

Model No.	Shaft dia. d	Lead l	Ball dia. D_w	Ball circle dia. d_m	Root dia. d_r	Effective turns of balls Turns × Circuits	Basic load rating (N) Dynamic C_a	Static C_{0a}	Axial rigidity K (N/μm)	Ball nut dimensions D	A	G	B	C	L	M	W	X	U	V	R	Q
LPFT 2516-2.5-S1	25	16	4.762	26.25	21.3	2.5×1	15100	29800	361	44	71	23	12	8	84	6	57	6.6	31	35	12	M6×1
LPFT 2516-3-S1						1.5×2	17600	35100	429						100							
LPFT 2520-2.5-S1		20	4.762	26.25	21.3	2.5×1	15100	29800	362	44	71	23	12	8	96	7	57	6.6	31	35	12	M6×1
LPFT 2520-3-S1						1.5×2	17600	35100	431						116							
LPFT 2525-1.5-S1		25	4.762	26.25	21.3	1.5×1	9720	17500	223	44	71	23	12	10	90	10	57	6.6	32	34	12	M6×1
LPFT 3220-2.5-S1	32	20	4.762	33.25	28.3	2.5×1	16800	38000	433	51	85	26	15	8	99	7	67	9	34	42	12	M6×1
LPFT 3220-3-S1						1.5×2	19700	46500	516						119							
LPFT 3225-2.5-S1		25	4.762	33.25	28.3	2.5×1	16800	38000	440	51	85	26	15	10	117	10	67	9	34	42	12	M6×1
LPFT 3225-3-S1						1.5×2	19700	46500	518						142							
LPFT 3232-1.5-S1		32	4.762	33.25	28.3	1.5×1	10800	23200	275	51	85	26	15	12	109	13	67	9	34	42	12	M6×1
LPFT 4020-2.5-S1	40	20	6.35	41.75	35.1	2.5×1	27600	63100	539	64	106	33	18	10	99	10	84	11	42	52	15	Rc1/8
LPFT 4020-3-S1						1.5×2	32300	76900	638						119							
LPFT 4025-2.5-S1		25	6.35	41.75	35.1	2.5×1	27600	63100	540	64	106	33	18	10	123	10	84	11	42	52	15	Rc1/8
LPFT 4025-3-S1						1.5×2	32300	76900	640						148							
LPFT 4032-2.5-S1		32	6.35	41.75	35.1	2.5×1	27600	63100	550	64	106	33	18	12	146	13	84	11	42	52	15	Rc1/8

Remarks 1.The ball nut is equipped with seals as the standard feature. Removing the seals does not change external dimensions of ball nut.
2. The right turn screw is standard. "L" is added to the end of the model code for left turn screw.

4. Load balls and retaining pieces are installed at a ratio of 1:1. Therefore, the basic load rating differs from that of other series.
5. Rigidity in the Table is theoretical value obtained from the elastic deformation between screw groove and ball when the preload is 5% of the basic dynamic load rating (C_a), and the axial load is applied to it. Refer to "Technical description" (Page B521) if preload differs from the conditions above, or when considering change in the deformation of the ball nut itself.

www.bergab.ru Берг АБ bergab@ya.ru Тел. (495)-228-06-21, факс (495) 223-3071

www.bergab.ru Берг АБ bergab@ya.ru Тел. (495)-228-06-21, факс (495) 223-3071

B-I-8.3 NDT and NDD series ball screws with rotatable nut

Nut rotatable ball screw is developed as a ball screw unit into which angular contact support ball bearings are integrated. It is best suited for an application that requires rotation of the ball nut while the screw shaft is fixed.

NDT Series

(1) Structure

● Balls are installed between the assembly housing and the ball nut. The outer bearing rings are integrated into the assembly housing and thus, compact design are attained.

● A timing pulley (prepared by the user) is directly secured to the end face of the nut.

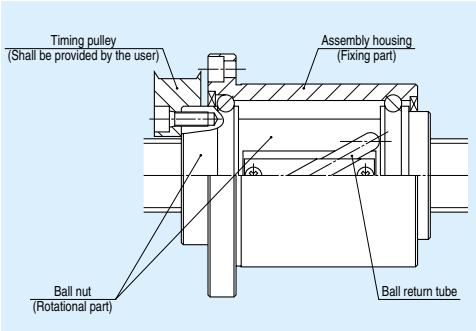

Fig. I-8•4 Ball nut structure

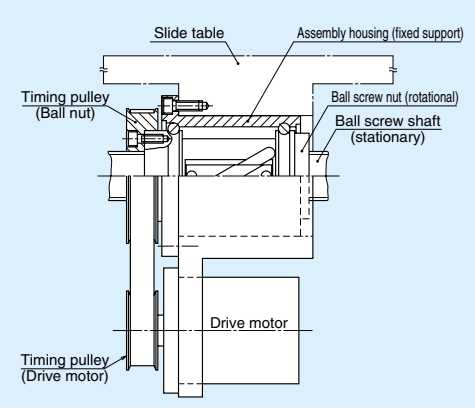

Fig. I-8•5 Example of installation to the table

(2) Features

● Multi-nut drive

Two or more nut units can be installed in a single ball screw shaft. They can be operated by respective motors.

● High operation speed

High feeding speed operation, but yet low rotational speed, is feasible by means of medium to high-helix lead ball screws.

● Easy installation

Merely install a mount housing to the table of the machine to take advantage of this multi-nut rotation system.

● Simple shaft end configuration

Shaft end configuration is simple because this unit does not need support bearings.

● Abundant series

There are 10 types of "shaft diameter/lead" combinations.

Selections are: Shaft diameters -- 32, 40, 50 mm; Leads -- 20, 25, 32, 40, 50 mm.

● Low inertia

Compared to the NSK current product (end cap ball recirculation system), rotational inertia was reduced by 16% at most.

(3) Accuracy grade and axial play of NDT Series

● Accuracy grades

C3, C5 and Ct7 are available.

* Please consult NSK for grades higher than the above, and for rolled screw shaft specification (Ct10).

◇Axial play Unit: mm

Code	Z	T	S
Axial play	0	0.005	0.020

◇Combination of accuracy grades and axial play

Accuracy grade	C3	C5	Ct7
Axial play code	Z、T、S	Z、T、S	S

(4) Permissible rotational speed

Either the d・n value or the critical speed, which is smaller, should be the permissible rotational speed of a ball screw.

* The basic concept is the same as that of general ball screws. Refer to "Technical Description: Permissible rotational speed" (Page B509).

◇ **d・n value**

Use lower d・n value (d: shaft dia, mm; n: rotational speed per minute, min^{-1}) than those shown in the table below.

Standard specification	d・n ≦ 70000
High-speed specification	d・n ≦ 100000

* Please consult NSK for high-speed specifications. Basic measures must be taken for the high speed ball screws respectively.

◇ **Critical speed n_c**

$$n_c = f\frac{d_r}{L^2} \times 10^7 \ (min^{-1}) \cdots\cdots\cdots (\text{I-1})$$

d_r : Screw shaft root diameter [See the dimension table]

L_i : Unsupported length (mm) [See Fig. I-8•6 Unsupported length]

f : Factor determined by the ball screw shaft end mounting method

As shown in Fig. I-8•6, calculate unsupported length (mm) of L_1, L_2, and L_3. (Assumed that the nut section is a fixed support.)

Shaft end mounting method	f
Fixed – Fixed support	21.9
Fixed – Simple support	15.1
Fixed – Free support	3.4

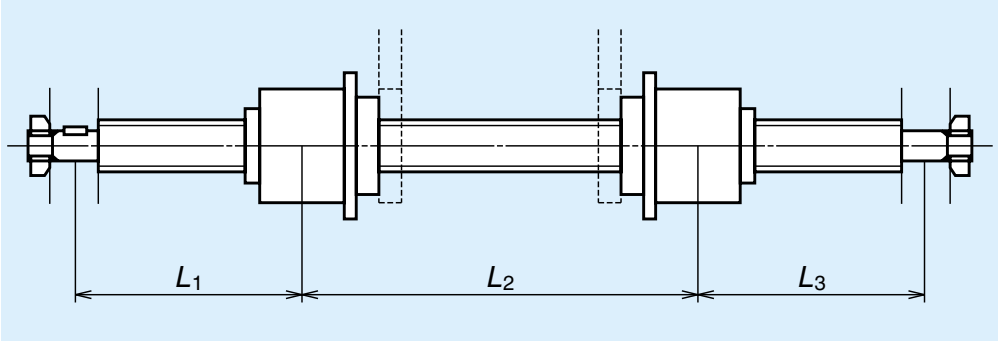

Fig. I-8•6 Unsupported length

www.bergab.ru Берг АБ bergab@ya.ru Тел. (495)-228-06-21, факс (495) 223-3071

www.bergab.ru Берг АБ bergab@ya.ru Тел. (495)-228-06-21, факс (495) 223-3071

NDD Series: Incorporating vibration dumper

An increase in stroke length may restrict required rotational speed of a ball screw due to the issue of critical speed even there is no problem on d·n limitation.

In such a case, we recommend using NDD Series nut rotatable ball screws equipped with vibration dumper.

It will make possible to operate a ball screw exceeding the critical speed, which is conventionally considered being impossible.

* However, NDD Series cannot be used exceeding the d·n limitation. Please consult with NSK in such a case.

*You cannot rotate the screw shaft of NDD Series.

(1) Structure

● Hollow ball screw shaft has a mechanism to absorb vibration energy (vibration damper). This increases dynamic rigidity of the screw shaft and lowers vibration when exceeding the critical speed. This product is patented by NSK.

● Construction of the ball nuts are the same as those of NDT Series (Nut rotatable ball screw).

(2) Features

● No need for measures against critical speed.

Conventionally, an increase in screw shaft diameter or use of intermediate support is the measure against the issue of critical speed. NDD Series ball screw will make these measures needless.

● Dimensional interchageability with NDT Series ball screws

The vibration damper is set inside a ball screw shaft, and therefore, there is no difference with existing Series in regards to external dimensions. The ball nuts of NDD Series are interchangeable with those of NDT Series.

● Others

Benefits in multiple ball nut on a screw shaft, high feeding speed for long stroke, easy in installation, and low inertia of the ball nuts are the same as NDT Series.

(3) Accuracy grade and axial play

They are the same as NDT Series.

(4) Permissible rotational speed

The d·n value is the same as NDT Series.

You don't need to consider the critical speed.

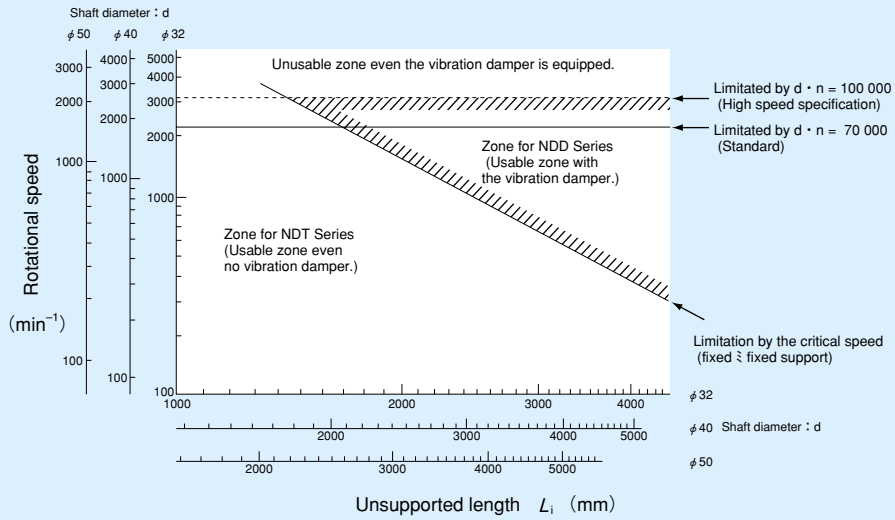

Fig. I-8•7 Series composition to rotational speed and unsupported length

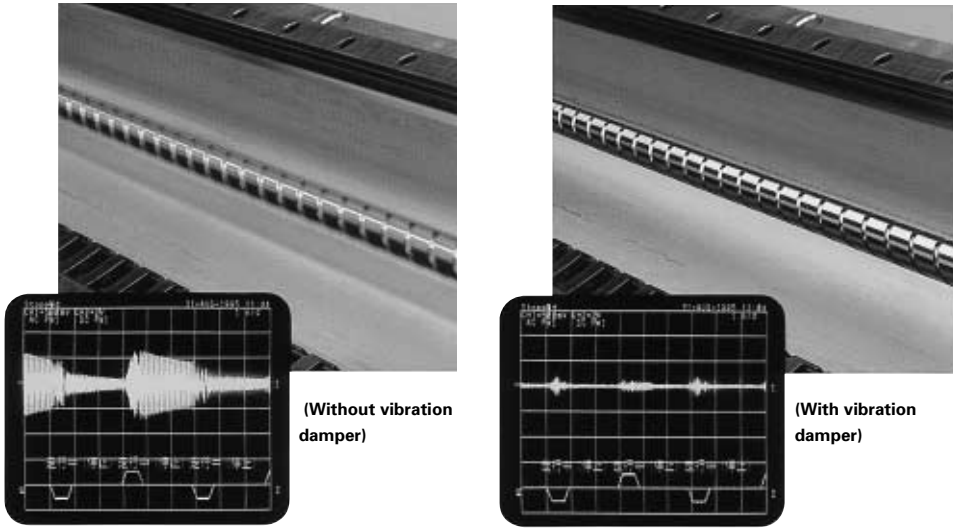

(Without vibration damper) (With vibration damper)

Fig. I-8•8 Vibration of screw shaft when nut is rotating (When exceeding the critical speed)

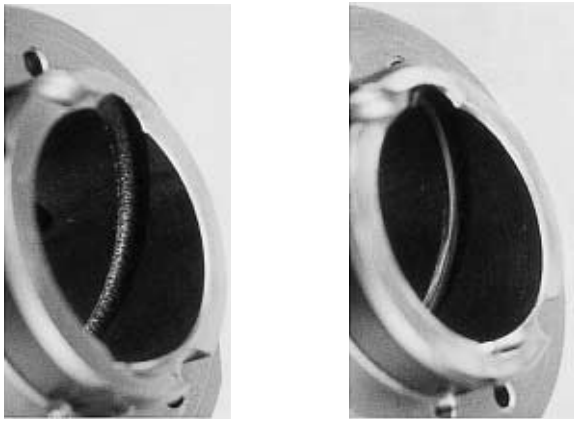

(Without vibration damper) (With vibration damper)

Fig. I-8•9 Effect of vibration dumper (results of endurance test) (When exceeding the critical speed)

www.bergab.ru Берг АБ bergab@ya.ru Тел. (495)-228-06-21, факс (495) 223-3071

www.bergab.ru Берг АБ bergab@ya.ru Тел. (495)-228-06-21, факс (495) 223-3071

[Calculation example]

Assume a system which moves two nuts on a shaft as shown at right.

Does this system operate appropriately if: both ends of the ball screw (shaft diameter 40 mm/lead 40 mm) are fixed, and the travel speed is at 60 m/min?

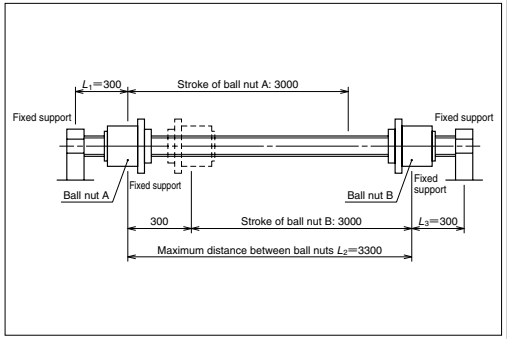

Fig. I-8•7 Drill in case of two nuts

[Answer]

The rotational speed n (min⁻¹) when the lead of the ball screw is 40 mm, and the travel speed is at 60 m/min is:

$$n=\frac{60\times10^3}{40}=1500(\text{min}^{-1})$$

• Calculate d・n value $n\leq\frac{70000}{40}=1750(\text{min}^{-1})$

• Calculate critical speed

The maximum unsupported length comes between Nut A and B.

Therefore, L_2 = 3300 (mm), f = 21.9 (Fixed – Fixed)

Root diameter: dr = 35.1 (mm)

$$n\leq\frac{21.9\times35.1}{3300^2}\times10^7=706(\text{min}^{-1})$$

The calculation indicates that the d・n value is at the safe level. But the critical speed exceeds the limitation. However, with a vibration damper, the system can be operated at 1500 min⁻¹.

(5) Specification number (NDT Serise, NDD Serise)

Example NDT4040–3C5Z1500/1800–2

- Nut model
  - • NDT
  - • NDD (with vibration damper)
- Screw shaft diameter (mm)
- Lead (mm)
- Effective turns of balls (turns x number of circuit)
- Accuracy grade code (C3, C5, Ct7)
- Axial play code (Z, T, S)
- Length of the threaded section (mm)
- Overall screw shaft length (mm)
- Number of nut on a screw shaft

This is an inquiring number used by the user and NSK before reference number is assigned for the item.

(6) Reference number (NDT Serise, NDD Serise)

Example W4015–123PXU–C5Z40

- Product code
- Screw shaft diameter (mm)
- Effective threaded length (x100 mm)
- NSK design No.
  ("T" is added for NDD Series)
- Accuracy grade code (C3, C5, C7)
- Axial play code (Z, T, S)
- Lead (mm)

Please use this number when ordering. The number is assigned when we finalize the specifications. The number is indicated on the specification drawing.

● **Precautions in designing**

◇ One end of the screw thread should be cut-through. Also, if the nut must be removed from the screw shaft, the user should have an arbor to prevent the balls from falling out during this process. (NSK manufactures arbors on request.)

◇ For general precautions regarding ball screws, refer to "Precautions for Designing Ball Screw" (Page B538) and "Precautions when Handling Ball Screws" (Page B497).

www.bergab.ru Берг АБ bergab@ya.ru Тел. (495)-228-06-21, факс (495) 223-3071

www.bergab.ru Берг АБ bergab@ya.ru Тел. (495)-228-06-21, факс (495) 223-3071

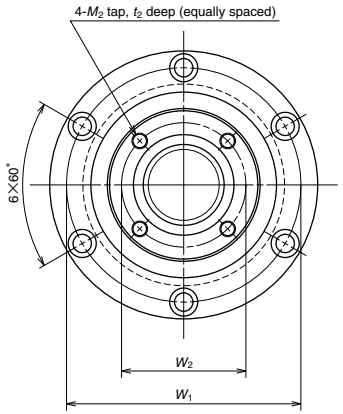

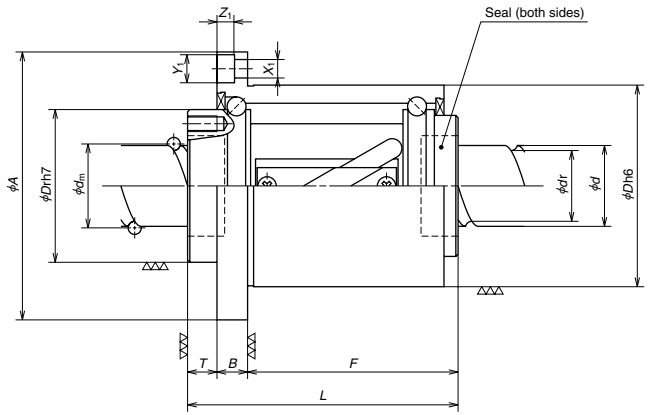

Unit: mm

Model No.	Shaft dia. d	Lead l	Ball dia. D_w	Ball circle dia. d_m	Root dia. d_r	Effective turns of balls Turns × Circuits	Basic load rating (N) Dynamic C_a	Basic load rating (N) Static C_{oa}	Moment of inertia, ball nut J (kg · cm²)	Ball nut mass W (kg)	Ball nut dimensions D	A	D_r	T	B	F	L	W_1	X_1	Y_1	Z_1	W_2	M_2	t_2
NDT 3220-2.5	32	20	4.762	33.25	28.3	2.5×1	17900	41800	6.2	2.9	78	105	60	12	12	83	107	91	6.6	11	6.5	50	M6	12
NDD 3220-2.5																								
NDT 3225-2.5		25	4.762	33.25	28.3	2.5×1	17900	41800	6.7	3.2	78	105	60	12	12	96	120	91	6.6	11	6.5	50	M6	12
NDD 3225-2.5																								
NDT 3232-1.5		32	4.762	33.25	28.3	1.5×1	11500	24800	6.2	2.9	78	105	60	12	12	83	107	91	6.6	11	6.5	50	M6	12
NDD 3232-1.5																								
NDT 3232-3						1.5×2	18900	44600																
NDD 3232-3																								
NDT 4025-2.5	40	25	6.35	41.75	35.1	2.5×1	28500	70000	19.3	6.0	100	133	76	15	15	106	136	116	9	14	8.5	62	M8	16
NDD 4025-2.5																								
NDT 4032-1.5		32	6.35	41.75	35.1	1.5×1	18400	41200	18.0	5.5	100	133	76	15	15	92	122	116	9	14	8.5	62	M8	16
NDD 4032-1.5																								
NDT 4032-3						1.5×2	30100	74100																
NDD 4032-3																								
NDT 4040-1.5		40	6.35	41.75	35.1	1.5×1	18400	41200	19.2	6.0	100	133	76	15	15	106	136	116	9	14	8.5	62	M8	16
NDD 4040-1.5																								
NDT 4040-3						1.5×2	30100	74100																
NDD 4040-3																								
NDT 5025-2.5	50	25	7.938	52.25	44.0	2.5×1	42700	109000	45.7	8.5	120	156	96	15	18	107	140	136	11	17.5	11	78	M10	18
NDD 5025-2.5																								
NDT 5032-2.5		32	7.938	52.25	44.0	2.5×1	42700	109000	48.9	9.4	120	156	96	15	18	125	158	136	11	17.5	11	78	M10	18
NDD 5032-2.5																								
NDT 5040-1.5		40	7.938	52.25	44.0	1.5×1	27500	66500	45.5	8.5	120	156	96	15	18	107	140	136	11	17.5	11	78	M10	18
NDD 5040-1.5																								
NDT 5040-3						1.5×2	44900	120000																
NDD 5040-3																								
NDT 5050-1.5		50	7.938	52.25	44.0	1.5×1	27500	66500	48.7	9.4	120	156	96	15	18	125	158	136	11	17.5	11	78	M10	18
NDD 5050-1.5																								
NDT 5050-3						1.5×2	44900	120000																
NDD 5050-3																								

Remarks 1. Right turn screw is standard. Consult NSK for left turn screws.
2. Seal is standard.

www.bergab.ru Берг АБ bergab@ya.ru Тел. (495)-228-06-21, факс (495) 223-3071

www.bergab.ru Берг АБ bergab@ya.ru Тел. (495)-228-06-21, факс (495) 223-3071

B-I-8.4 Ball Screw with Spline: "Robotte"

NSK's Robotte is a ball screw with a high-performance spline. It is ideal for various actuators such as the vertical axis of SCALA type robot.

◇ Mount housing, nuts, and support bearings are combined into a single unit.
◇ Timing pulley (prepared by the user) is directly secured at the end face of the nut.

(1) Structure and series models

◇ A ball screw groove and a ball spline groove are made in one shaft, combining the ball screw and the ball spline.

Four models with different moving functions and performances are available. Select a standard model if rigidity is important. A compact system is recommended for reducing the weight of machine.

Table I-8•1 Robotte product categories

Model	Appearance	Size	Structure(Movement)	Page
Σ	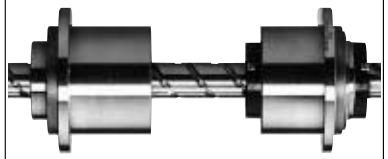	Standard	Z+θ Unit	B481
ΣZ		Standard	Z Unit	B483
ΣC		Compact	Z+θ Unit	B485
ΣCZ	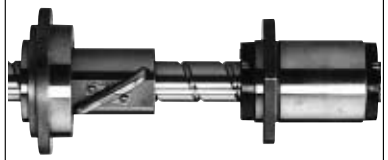	Compact	Z Unit	B487

(2) Features

● High functions

A single shaft has both feeding mechanism and guide functions. This allows the shaft ends to move back and forth (linear motion), as well as to rotate.

● Compact and lightweight

A ball screw nut and a spline nut are placed on one shaft, and a support bearings are also combined to the unit. This allows compact and high-precision design. Hollow shaft is standard to reduce weight. The hollow can be used for wiring and piping. Other components are also designed to be light in weight.

● Low inertia

Because of return tube type ball nut of which outside diameter is decreased, low inertia design is enabled. It reduces the inertia by 19% of conventional products.

(3) Functions

As shown in Fig. I-8•9, the ball screw nut and a spline nut are rotated independently to control rotation value. Thereby the shaft can move in any direction -- linear and rotational. Table I-8•3 shows the relationship between power input and output.

● Major applications

SCALA type and Cartesian type industrial robots, semiconductor manufacturing machines, machines for automobile production facilities, material handling systems, other Z (vertical) axis and Z axis plus θ (rotation) axis actuators.

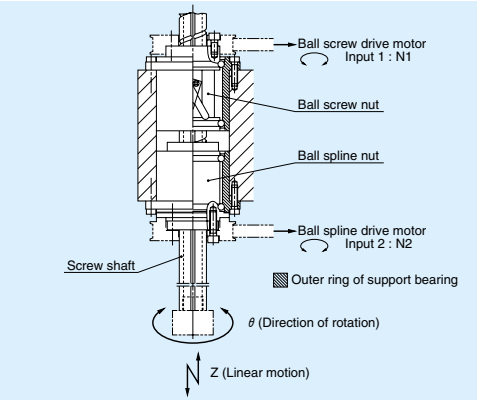

Fig. I-8•9 Example structure of Z axis plus θ axis actuator

Table I-8•3 Power input and output of Robotte

Shaft movement (output)		Input		
Z(mm/min) (Up-down movement)	θ (min⁻¹) (Rotational movement)	①(min⁻¹) Ball screw	②(min⁻¹) Spline	
Up, down N1×l	Stop 0	Rotate N1	Stop 0	
Stop 0	Rotate N2	Rotate N1	Rotate N2	N1=N2
Up, down N2×l	Rotate N2	Stop 0	Rotate N2	
Up, down |N1−N2|×l	Rotate N2	Rotate N1	Rotate N2	N1≠N2

※ l : Lead (mm)

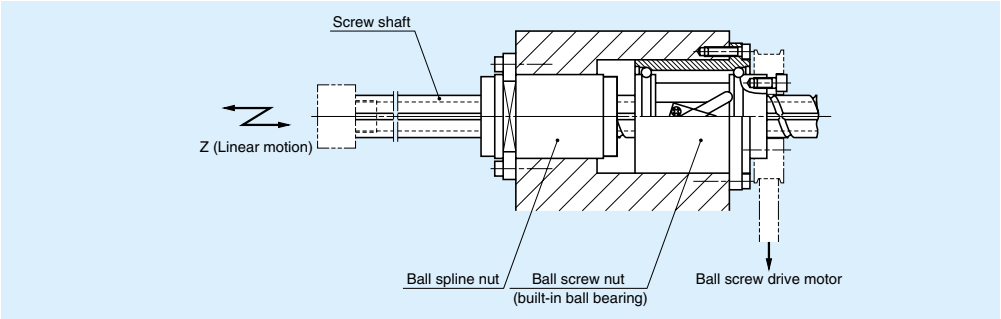

Fig. I-8•10 Example structure of single Z axis unit

www.bergab.ru Берг АБ bergab@ya.ru Тел. (495)-228-06-21, факс (495) 223-3071

www.bergab.ru Берг АБ bergab@ya.ru Тел. (495)-228-06-21, факс (495) 223-3071

(4) Load rating and life

The relationship between load rating of the ball spline section and life is the same as in other NSK liner motion products. However, various loads that apply to Robotte must be taken into account. For example, the following factors must be considered in calculating life when the product is used as shown in Fig. I-8•11.

F_a: Load that is generated when the shaft moves in up-down direction. (Load is applied to the ball screw nut.)

T: Torque that is generated to the shaft by F_a.

F_r: Load that is generated by moment of inertia of the shaft and the work attached to Robotte as well as by centrifugal force when the arm rotates.

θ: Direction of Fr load that changes by shaft rotation.

NSK has life calculation programs which take these factors into account. Please ask NSK for more details.

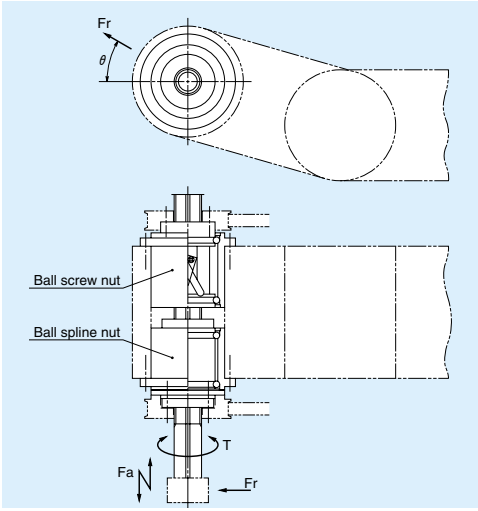

Fig. I-8•11 Load and torque applied to Robotte

(5) Accuracy grades and axial play

◇ Accuracy grades (ball screw section)
C3, C5, Ct7 are available.

◇ Axial play (ball screw section)

Unit: mm

Code	Z	T	S
Axial play	0	0.005	0.020

There is no play in spline section.

Combination of accuracy grades of ball screw section and axial play

Unit: mm

Accuracy grade \ Axial play	Z 0 (preload)	T 0.005 or less	S 0.02 or less
C3	C3Z	C3T	C3S
C5	C5Z	C5T	C5S
Ct7	—	—	Ct7S

(6) Specification number and reference number

◇ Specification number

Major specifications are expressed by alphanumeric codes. Specification number is used between the client and NSK for an inquiry until specifications are finalized.

Example of specification number : **∑CZ 2520 – C5 Z–B200 S200 /300**

Model
∑ : Standard type Z + θ unit
∑Z : Standard type Z unit
∑C : Compact type Z + θ unit
∑CZ : Compact type Z unit

Screw shaft diameter/ lead (mm)

Accuracy grade C3, C5, C7

Overall length of shaft (mm)

Effective length of spline (mm)

Effective length of ball screw (mm)

Axial play code (Z, T, S)

◇Reference number

Reference number is entered in the specification drawing as well as in the quotation, and submitted to the client. Please use reference number when ordering.

Reference number is also shown on the wrapping/packing of the product as the identification.

Example of specification number : **PW 25 02 – 123 PTU–C5 Z 20**

Nut model

Screw shaft diameter (mm)

Effective length of thread (unit in 100 mm)

Design serial number

Lead (mm)

Axial play code

Accuracy grade

Appearance/specification code

(7) Precautions in designing

◇ The shaft (overall length L) can be extended to 25 times of the shaft diameter.

◇ To remove the spline nut from the shaft for assembling, use an arbor as shown in Fig. I-8•12. Avoid removing ball screw nut as much as possible. Refer to root diameter in the dimension table for arbor diameter. (NSK manufactures the arbors on request.)

◇ For general precautions regarding ball screws, refer to "Precautions in Designing" (Page B538) and "Precautions in Handling" (Page B497).

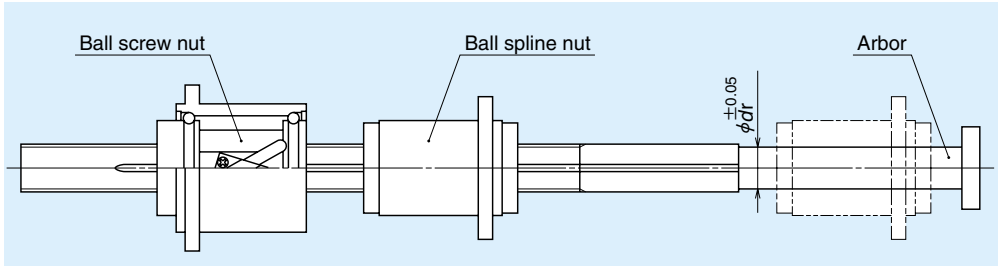

Fig. I-8•12 Removing spline nut

www.bergab.ru Берг АБ bergab@ya.ru Тел. (495)-228-06-21, факс (495) 223-3071

www.bergab.ru Берг АБ bergab@ya.ru Тел. (495)-228-06-21, факс (495) 223-3071

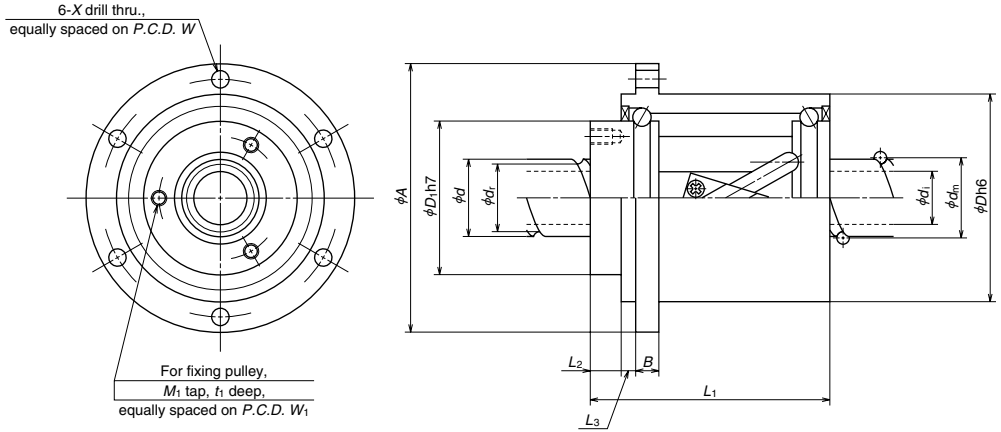

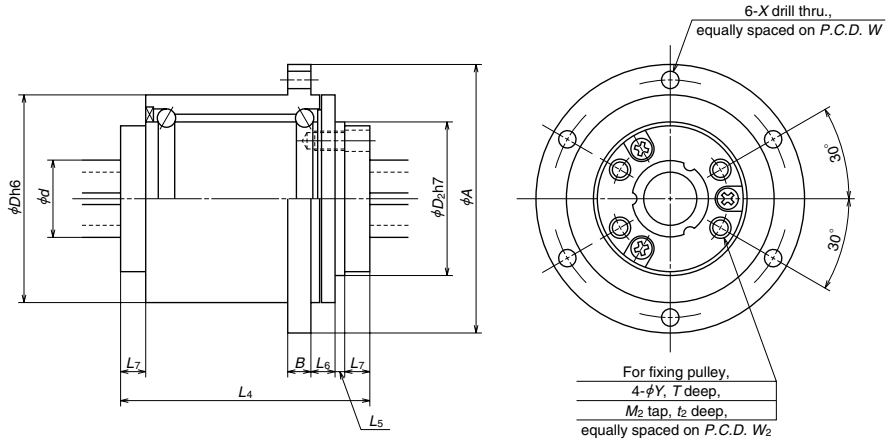

Ball screw nut dimensions

Model No.	Shaft dia. d	Lead l	Ball dia. D_w	Ball circle dia. d_m	Root dia. d_r	Screw shaft hollow d_i	Ball screw nut: Basic load rating (N) C_a	C_{0a}	Dimensions D	A	B	L_1	L_2	L_3	M_1	t_1	W_1	D_1	W	X	Moment of inertia (kg · cm²)	Mass (kg)
Σ1610	16	10	3.175	16.75	13.4	(8)	4710	8110	48	64	5	47	7	4	3-M4	6	28	35	56	4.5	0.41	0.50
Σ1632		32					2990	4870				52									0.44	0.55
Σ2010	20	10	3.175	20.75	17.4	(14)	8210	17500	54	70	6	57	8	4	3-M4	6	32	40	62	4.5	0.64	0.74
Σ2020		20					5290	10300				63									0.65	0.81
Σ2040		40					3360	6170				57									0.64	0.74
Σ2510	25	10	3.175	25.75	22.4	(18)	9110	21900	58	74	6	57	8	4	3-M4	6	38	45	66	4.5	1.10	0.81
Σ2520		20					5870	13200				63									1.18	0.88
Σ2525		25					5870	13200				72									1.30	1.00
Σ3220	32	20	3.175	32.75	29.4	(25)	6540	16800	70	95	8	70	10	6	3-M5	10	44	53	82	6.6	2.60	1.46
Σ3232		32					6540	16800				91									3.15	1.83
Σ4020	40	20	3.969	41.0	36.9	(30)	9770	26300	85	110	8	73	10	6	4-M5	10	58	67	96	6.6	5.96	2.02
Σ4040		40					9770	26300				107									7.85	2.85
Σ4520	45	20	3.969	46.0	41.9	(35)	10300	29700	90	115	8	73	10	6	4-M5	10	63	72	101	6.6	7.73	2.17
Σ4540		40					10300	29700				107									10.3	3.06

Ball spline nut dimensions

Unit: mm

Ball spline nut: Basic load rating (N) C_r	C_{or}	Basic torque (N · m) C_t	C_{ot}	Dimensions D	A	B	L_4	L_5	L_6	L_7	Y	T	M_2	t_2	W_2	D_2	W	X	Moment of inertia (kg · cm²)	Mass (kg)	Screw shaft dia. d	Model No.
5530	7270	61.5	91.3	48	64	5	60	2.5	6.5	6.5	4.5	6.5	M4	7	25	35	56	4.5	0.71	0.63	16	**Σ1610**
5890	8000	65.5	100																			**Σ1632**
6260	8720	86.3	135	54	70	6	65	2.5	6.5	6.5	5.5	6.5	M5	8	30.5	40	62	4.5	1.15	0.87	20	**Σ2010**
6610	9450	91.1	145																			**Σ2020**
6610	9450	91.1	145																			**Σ2040**
6630	9450	115	185	58	74	6	70	2.5	6.5	6.5	5.5	6.5	M5	8	35.5	45	66	4.5	1.88	1.03	25	**Σ2510**
7290	10900	125	210																			**Σ2520**
7290	10900	125	210																			**Σ2525**
7630	11600	165	285	70	95	8	75	2.5	7.5	6.5	5.5	6.5	M5	8	42	50	82	6.6	3.80	1.62	32	**Σ3220**
7950	12400	175	305																			**Σ3232**
10600	14800	290	455	85	110	8	80	4	7.5	8	5.5	8	M5	8	55	65	96	6.6	9.74	2.38	40	**Σ4020**
11200	15900	305	490																			**Σ4040**
11200	15900	340	550	90	115	8	85	4	7.5	8	5.5	8	M5	8	60	70	101	6.6	12.5	2.56	45	**Σ4520**
11700	17000	360	590																			**Σ4540**

www.bergab.ru Берг АБ bergab@ya.ru Тел. (495)-228-06-21, факс (495) 223-3071

www.bergab.ru Берг АБ bergab@ya.ru Тел. (495)-228-06-21, факс (495) 223-3071

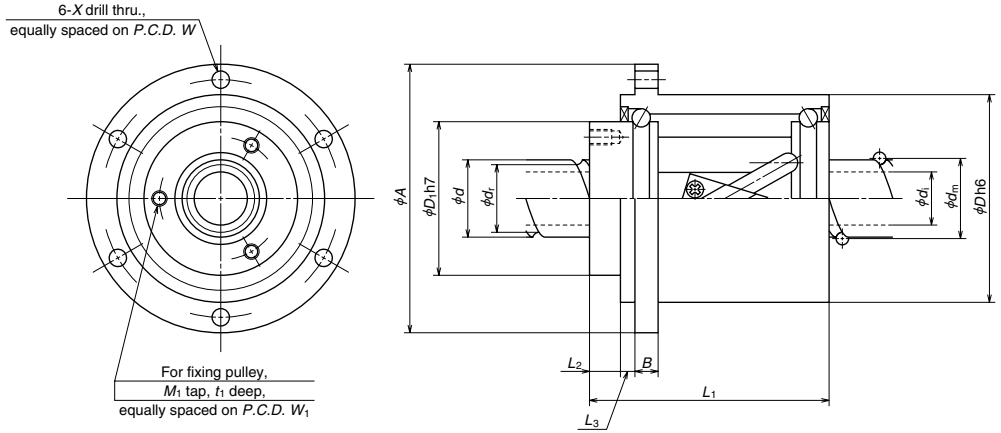

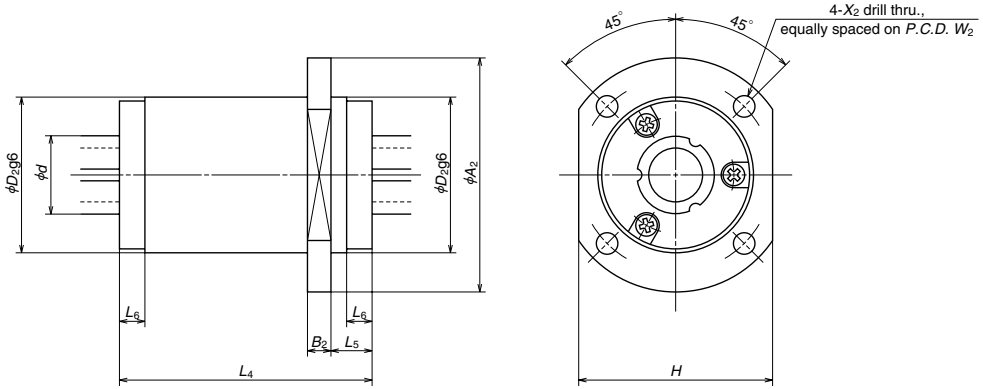

Ball screw nut dimensions

Model No.	Shaft dia. d	Lead l	Ball dia. D_w	Ball circle dia. d_m	Root dia. d_r	Screw shaft hollow d_l	Ball screw nut: Basic load rating (N) C_a	C_{0a}	Dimensions D	A	B	L_1	L_2	L_3	M_1	t_1	W_1	D_1	W	X	Moment of inertia (kg · cm²)	Mass (kg)
ΣZ1610	16	10	3.175	16.75	13.4	(8)	4710	8110	48	64	5	47	7	4	3-M4	6	28	35	56	4.5	0.41	0.50
ΣZ1632		32					2990	4870				52									0.44	0.55
ΣZ2010	20	10	3.175	20.75	17.4	(14)	8210	17500	54	70	6	57	8	4	3-M4	6	32	40	62	4.5	0.64	0.74
ΣZ2020		20					5290	10300				63									0.65	0.81
ΣZ2040		40					3360	6170				57									0.64	0.74
ΣZ2510	25	10	3.175	25.75	22.4	(18)	9110	21900	58	74	6	57	8	4	3-M4	6	38	45	66	4.5	1.10	0.81
ΣZ2520		20					5870	13200				63									1.18	0.88
ΣZ2525		25					5870	13200				72									1.30	1.00
ΣZ3220	32	20	3.175	32.75	29.4	(25)	6540	16800	70	95	8	70	10	6	3-M5	10	44	53	82	6.6	2.60	1.46
ΣZ3232		32					6540	16800				91									3.15	1.83
ΣZ4020	40	20	3.969	41.0	36.9	(30)	9770	26300	85	110	8	73	10	6	4-M5	10	58	67	96	6.6	5.96	2.02
ΣZ4040		40					9770	26300				107									7.85	2.85
ΣZ4520	45	20	3.969	46.0	41.9	(35)	10300	29700	90	115	8	73	10	6	4-M5	10	63	72	101	6.6	7.73	2.17
ΣZ4540		40					10300	29700				107									10.3	3.06

Ball spline nut dimensions

Unit: mm

Ball spline nut: Basic load rating (N) C_r	C_{or}	Basic torque (N · m) C_t	C_{ot}	Dimensions D_2	A_2	B_2	L_4	L_5	L_6	H	W_2	X_2	Mass (kg)	Screw shaft dia. d	Model No.
5530	7270	61.5	91.3	35	55	6	60	10.5	6.5	45	45	4.5	0.35	16	**ΣZ1610**
5890	8000	65.5	100												**ΣZ1632**
6260	8720	86.3	135	40	60	6	65	10.5	6.5	50	50	5.5	0.46	20	**ΣZ2010**
6610	9450	91.1	145												**ΣZ2020**
6610	9450	91.1	145												**ΣZ2040**
6630	9450	115	185	45	65	6	70	10.5	6.5	55	55	5.5	0.57	25	**ΣZ2510**
7290	10900	125	210												**ΣZ2520**
7290	10900	125	210												**ΣZ2525**
7630	11600	165	285	50	70	6	75	10.5	6.5	60	60	5.5	0.64	32	**ΣZ3220**
7950	12400	175	305												**ΣZ3232**
10600	14800	290	455	65	88	8	80	12	8	76	76	6.6	1.20	40	**ΣZ4020**
11200	15900	305	490												**ΣZ4040**
11200	15900	340	550	70	93	8	85	12	8	81	81	6.6	1.39	45	**ΣZ4520**
11700	17000	360	590												**ΣZ4540**

www.bergab.ru Берг АБ bergab@ya.ru Тел. (495)-228-06-21, факс (495) 223-3071

www.bergab.ru Берг АБ bergab@ya.ru Тел. (495)-228-06-21, факс (495) 223-3071

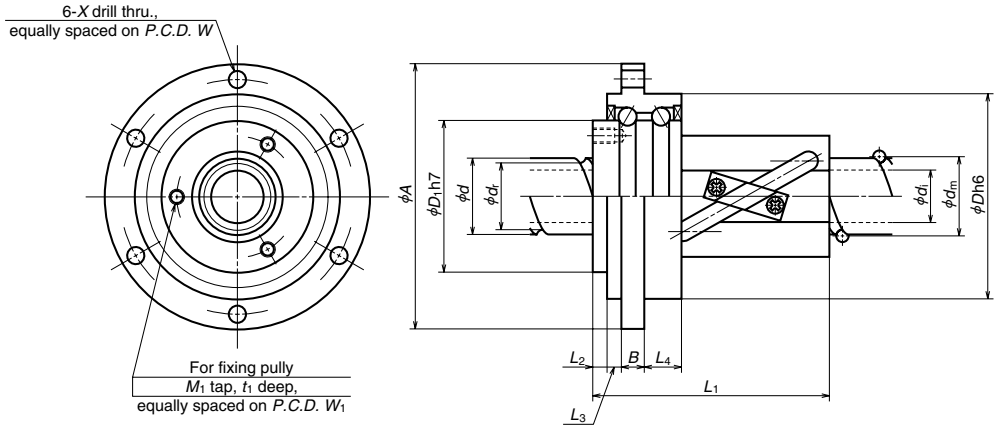

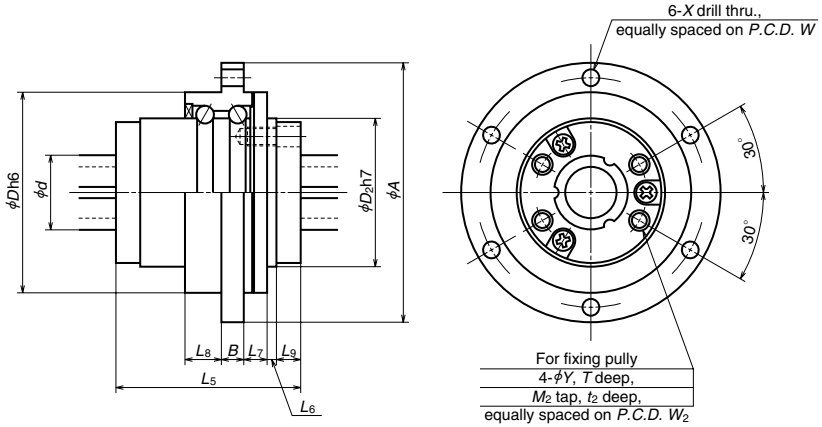

Ball screw nut dimensions

Model No.	Shaft dia. d	Lead l	Ball dia. D_w	Ball circle dia. d_m	Root dia. d_r	Screw shaft hollow d_i	Ball screw nut: Basic load rating (N) C_a	C_{0a}	Dimensions D	A	B	L_1	L_2	L_3	L_4	M_1	t_1	W_1	D_1	W	X	Moment of inertia (kg · cm²)	Mass (kg)
ΣC1610	16	10	3.175	16.75	13.4	(8)	4710	8110	48	64	5	46	3	4	10	3-M4	6	28	35	56	4.5	0.40	0.41
ΣC1632		32					2990	4870				51			10							0.43	0.43
ΣC2010	20	10	3.175	20.75	17.4	(14)	8210	17500	54	70	6	56	4	4	10	3-M4	6	32	40	62	4.5	0.63	0.53
ΣC2020		20					5290	10300				63			10							0.65	0.56
ΣC2040		40					3360	6170				56			10							0.63	0.53
ΣC2510	25	10	3.175	25.75	22.4	(18)	9110	21900	58	74	6	56	4	4	10	3-M4	6	38	45	66	4.5	1.04	0.60
ΣC2520		20					5870	13200				63			10							1.13	0.64
ΣC2525		25					5870	13200				71			10							1.24	0.69

Ball spline nut dimensions

Unit: mm

Ball spline nut: Basic load rating (N) C_r	C_{or}	Basic torque (N · m) C_t	C_{ot}	Dimensions D	A	B	L_5	L_6	L_7	L_8	L_9	Y	T	M_2	t_2	W_2	D_2	W	X	Moment of inertia (kg · cm²)	Mass (kg)	Screw shaft dia. d	Model No.
4300	5090	47.9	63.9	48	64	5	45	2.5	6.5	10	6.5	4.5	6.5	M4	7	25	35	56	4.5	0.52	0.42	16	**ΣC1610**
4300	5090	47.9	63.9																				**ΣC1632**
4730	5820	65.1	90.5	54	70	6	50	2.5	6.5	10	6.5	5.5	6.5	M5	8	30.5	40	62	4.5	0.86	0.56	20	**ΣC2010**
5110	6540	70.5	100																				**ΣC2020**
5110	6540	70.5	100																				**ΣC2040**
5130	6540	87.8	125	58	74	6	55	2.5	6.5	10	6.5	5.5	6.5	M5	8	35.5	45	66	4.5	1.44	0.67	25	**ΣC2510**
5870	8000	100	155																				**ΣC2520**
5870	8000	100	155																				**ΣC2525**

www.bergab.ru Берг АБ bergab@ya.ru Тел. (495)-228-06-21, факс (495) 223-3071

www.bergab.ru Берг АБ bergab@ya.ru Тел. (495)-228-06-21, факс (495) 223-3071

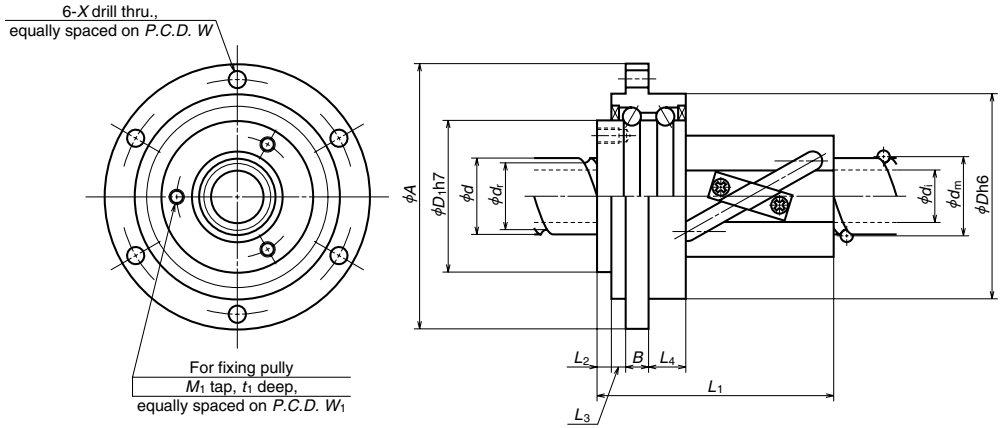

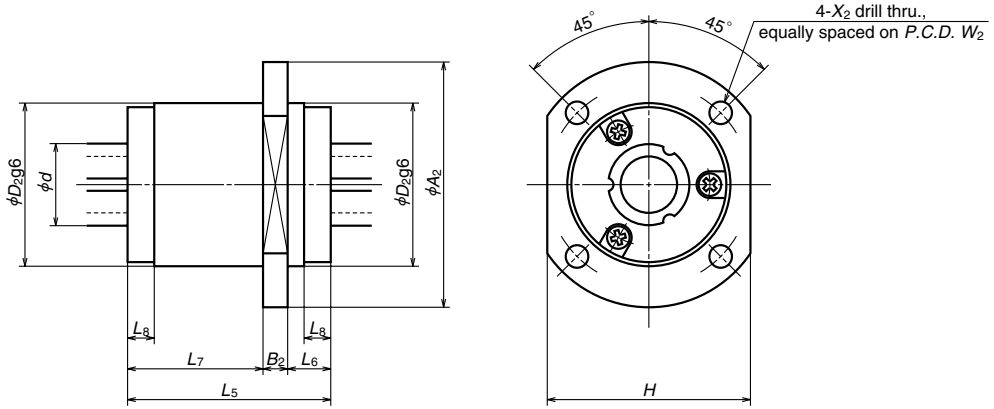

Ball screw nut dimensions

Model No.	Shaft dia. d	Lead l	Ball dia. D_w	Ball circle dia. d_m	Root dia. d_r	Screw shaft hollow d_i	Ball screw nut: Basic load rating (N) C_a	C_{0a}	Dimensions D	A	B	L_1	L_2	L_3	L_4	M_1	t_1	W_1	D_1	W	X	Moment of inertia (kg · cm²)	Mass (kg)
∑CZ1610	16	10	3.175	16.75	13.4	(8)	4710	8110	48	64	5	46	3	4	10	3-M4	6	28	35	56	4.5	0.40	0.41
∑CZ1632		32					2990	4870				51										0.43	0.43
∑CZ2010	20	10	3.175	20.75	17.4	(14)	8210	17500	54	70	6	56	4	4	10	3-M4	6	32	40	62	4.5	0.63	0.53
∑CZ2020		20					5290	10300				63										0.65	0.56
∑CZ2040		40					3360	6170				56										0.63	0.53
∑CZ2510	25	10	3.175	25.75	22.4	(18)	9110	21900	58	74	6	56	4	4	10	3-M4	6	38	45	66	4.5	1.04	0.60
∑CZ2520		20					5870	13200				63										1.13	0.64
∑CZ2525		25					5870	13200				71										1.24	0.69

Ball spline nut dimensions

Unit: mm

Ball spline nut: Basic load rating (N) C_r	C_{or}	Basic torque (N · m) C_t	C_{ot}	Dimensions D_2	A_2	B_2	L_5	L_6	L_7	L_8	H	W_2	X_2	Mass (kg)	Screw shaft dia. d	Model No.
4300	5090	47.9	63.9	35	55	6	45	10.5	28.5	6.5	45	45	4.5	0.26	16	∑CZ1610
4300	5090	47.9	63.9													∑CZ1632
4730	5820	65.1	90.5	40	60	6	50	10.5	33.5	6.5	50	50	5.5	0.35	20	∑CZ2010
5110	6540	70.5	100													∑CZ2020
5110	6540	70.5	100													∑CZ2040
5130	6540	87.8	125	45	65	6	55	10.5	38.5	6.5	55	55	5.5	0.44	25	∑CZ2510
5870	8000	100	155													∑CZ2520
5870	8000	100	155													∑CZ2525

www.bergab.ru Берг АБ bergab@ya.ru Тел. (495)-228-06-21, факс (495) 223-3071

www.bergab.ru Берг АБ bergab@ya.ru Тел. (495)-228-06-21, факс (495) 223-3071

B-I-8.5 Hollow Shaft Ball Screw

The increase in speed of the feeding mechanism for highly accurate positioning may require some measures against thermal expansion of the ball screw (forced cooling using hollow ball screw). NSK standardized hollowed screw shafts and shaft ends configuration (sealing section and support bearing seat). NSK recommend this as the most effective measure against thermal expansion.

(1) Features

● Stable positioning accuracy

Suppresses expansion of the ball screw shaft by rising temperature, and provides stable, precise positioning.

● Prevents displacement of various sections

Minimizes deformation of the ball screw support bearings as well as of the machine base which is caused by thermal expansion of ball screw. Forced cooling keeps the heat from spreading to other sections, and prevents the processing table from deforming due to heat.

● Reduces warm-up time

Temperature does not rise high, therefore cuts machine warm-up period.

● Maintains lubricant's effect

Removes heat from the ball screw, deterring lubricant deterioration.

● Easy designing for installation

Use support bearing unit exclusive for NSK ball screws (high load capacity for machine tools, see Page B291) and seal unit (Page B493) to standardized shaft end. This makes designing of mounting ball screw easy.

(2) Precautions in designing

◇ Refer to T Type and D Type for ball screw specifications.

◇ The overall ball screw length can be extended up to 3000 mm.

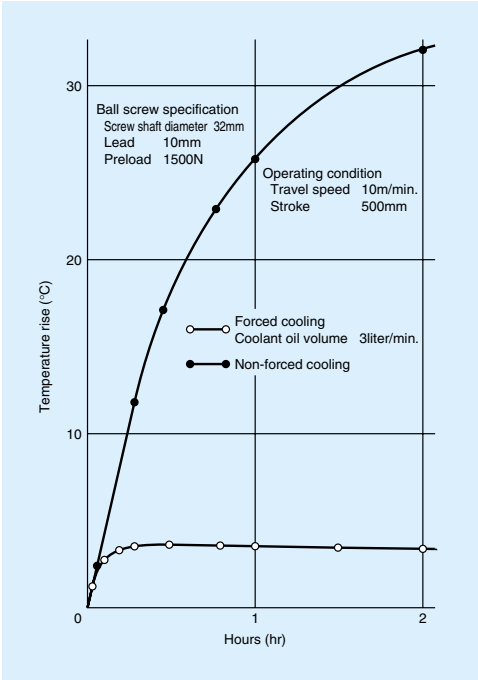

Fig. I-8•13 Effect of forced cooling by hollow ball screw

(3) Model code

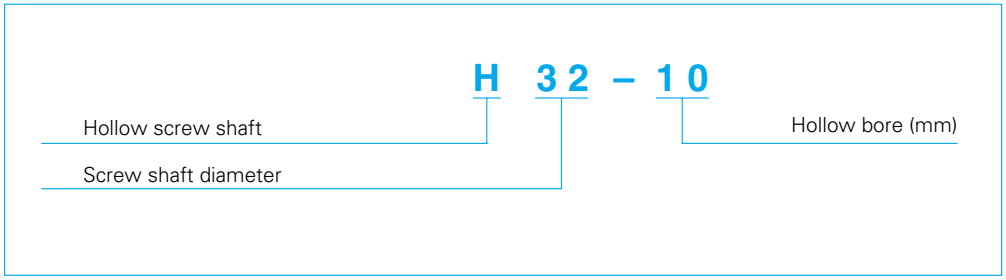

www.bergab.ru Берг АБ bergab@ya.ru Тел. (495)-228-06-21, факс (495) 223-3071

www.bergab.ru Берг АБ bergab@ya.ru Тел. (495)-228-06-21, факс (495) 223-3071

(4) Example installation and standard dimensions

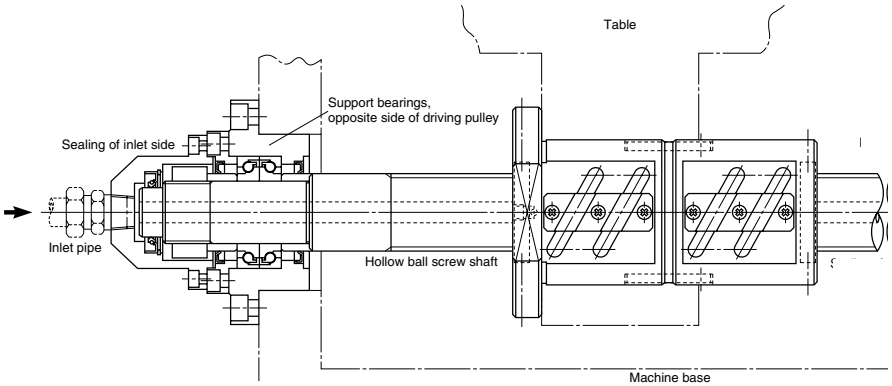

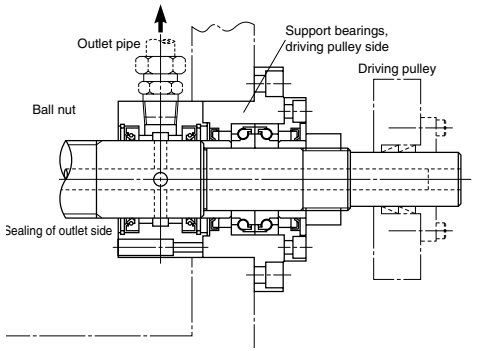

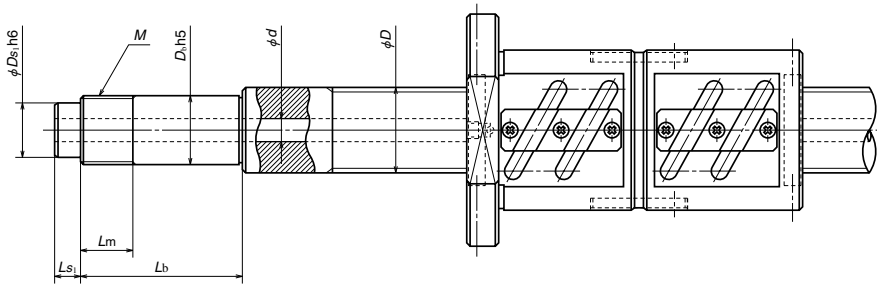

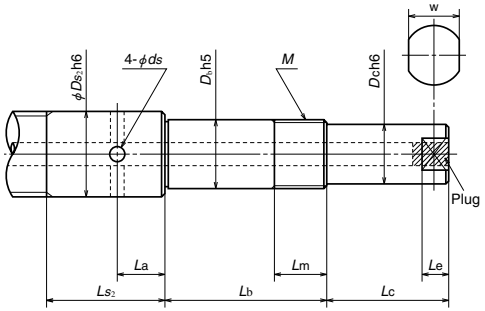

Unit: mm

Hollow shaft ball screw Model No.	Screw shaft		Bearing seat				Sealing					
	Diameter	Hollow	Diameter	Lock nut			Inlet		Outlet			
	D	*d*	*D*b	*M*	*L*m	*L*b	*D*s1	*L*s1	*D*s2	*L*s2	*L*a	*d*s
H32-10	32	10	25	M25×1.5	26	89 104 119	20	15	32	60	25	6
H40-12	40	12	30	M30×1.5	26	89 104 119	25	15	40	60	25	7
H50-15	50	15	40	M40×1.5	30	92 107 122	32	15	50	65	27	8

Drive side		Spanner flats		Applicable support unit	Used bearing	Equipped seal unit	
						Shaft end	Shaft surface
*D*c	*L*c	*w*	*L*e				
20	40	17	8	WBK25DF-31 WBK25DFD-31	25TAC62BDFC10PN7A 25TAC62BDFDC10PN7A (25TAC62BDFFC10PN7A)	WSK20A-01	WSK32B-01
25	50	22	10	WBK30DF-31 WBK30DFD-31	30TAC62BDFC10PN7A 30TAC62BDFDC10PN7A (30TAC62BDFFC10PN7A)	WSK25A-01	WSK40B-01
35	70	30	13	WBK40DF-31 WBK40DFD-31 WBK40DFF-31	40TAC72BDFC10PN7A 40TAC72BDFDC10PN7A 40TAC72BDFFC10PN7A	WSK32A-01	WSK50B-01

www.bergab.ru Берг АБ bergab@ya.ru Тел. (495)-228-06-21, факс (495) 223-3071

www.bergab.ru Берг АБ bergab@ya.ru Тел. (495)-228-06-21, факс (495) 223-3071

(5) Seal units for hollow ball screw shaft (available by order)
This is an exclusive joint for coolant of the hollow ball screw shaft.

A Type
(for shaft end)

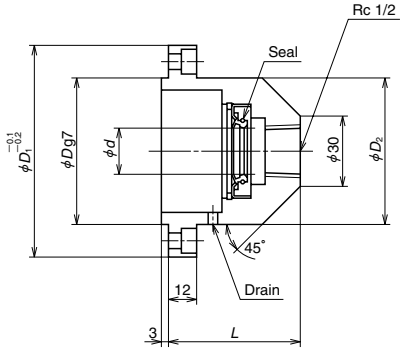

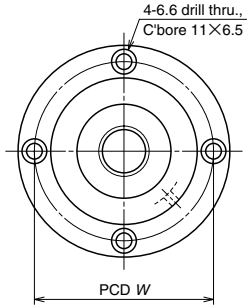

Unit: mm

Reference number	d	D	D_1	D_2	L	W	Fixing bolt
WSK20A-01	20	57	85	57	56	70	M6
WSK25A-01	25	57	85	57	56	70	M6
WSK32A-01	32	69	95	67	61	80	M6

B Type
(for shaft outer surface)

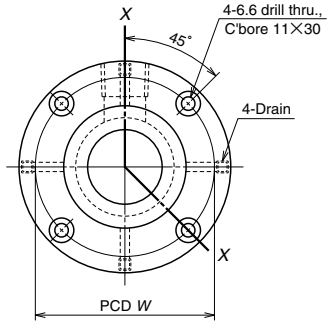

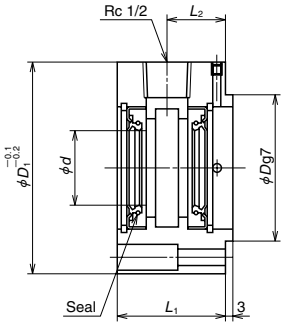

Section X-X

Unit: mm

Reference number	d	D	D_1	L_1	L_2	W	Fixing bolt
WSK32B-01	32	57	85	46	25	70	M6
WSK40B-01	40	57	85	46	25	70	M6
WSK50B-01	50	69	95	49	27	80	M6

◇ **Precautions in handling**
- Use NSK support unit (high load capacity for machine tools in Page B291) for installation in order to maintain the eccentricity between screw shaft and seal unit.
- Apply grease to the lip section for protection at the time of installation to the ball screw.
- Make certain that the drain holes (one for A Type, four for B Type) of the seal unit directly face downward when the unit is installed.

www.bergab.ru Берг АБ bergab@ya.ru Тел. (495)-228-06-21, факс (495) 223-3071

www.bergab.ru Берг АБ bergab@ya.ru Тел. (495)-228-06-21, факс (495) 223-3071

B-I-8.5 Special Ball Screws

In addition to the standard ball screws, NSK manufactures various types of ball screws in special shapes as shown below.

Thoroughly discuss with NSK for specifications before determining specifications and ordering ball screws in special shape.

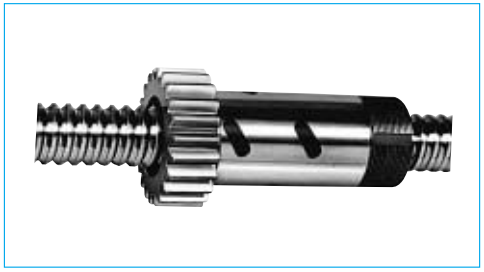

Nut with gear

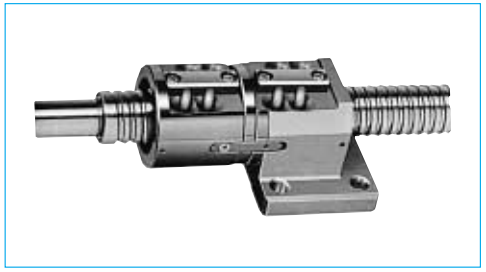

Double nut with flat mounting face

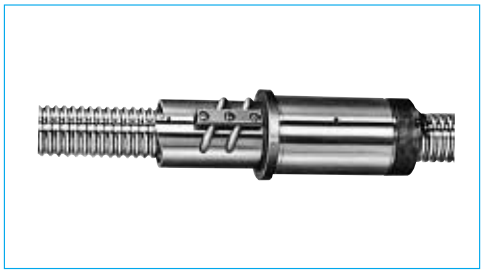

Lightly preloaded single nut with bearing seat

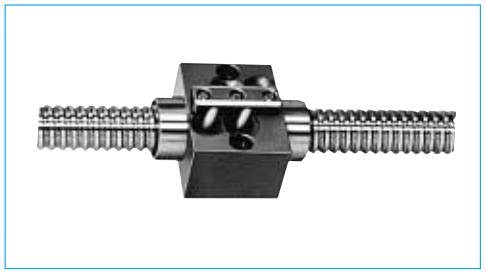

Lightly preloaded single nut with flat mounting face

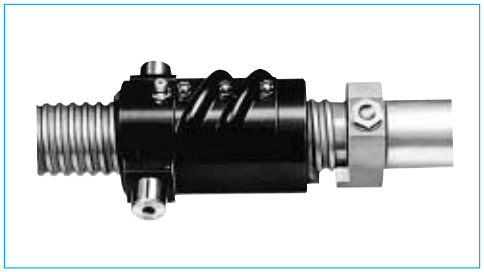

Nut with trunion

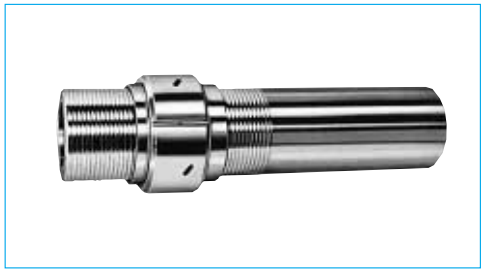

Hollow shaft, lightly preloaded single nut, with large shaft diameter and fine lead

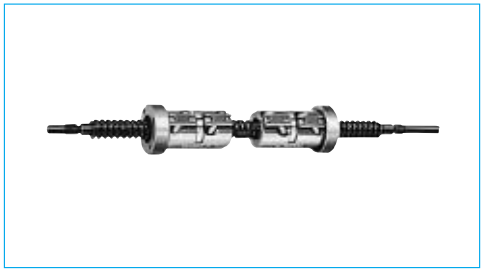

Double nut with right and left turn thread on each side of screw shaft

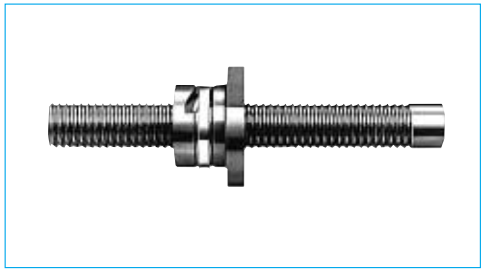

Ceramic ball screw

B-I-9 Guide to Technical Services

(1) CAD data
Homepage
http://www.jp.nsk.com/tech-support/cad_data.html

■ CD-ROM
(AUTO CAD DXF)
Standard ball screws in stock
- A Series ···Finished shaft end, precision ball screws
- S Series ···Blank shaft ends

* The same CD-ROM contains linear guides, rolling bearings, etc.

(2) Telephone consultation with NSK engineers
This catalogue contains technical explanation for each section. However, some descriptions and explanations may be insufficient due to page limitation, etc. To amend this shortcoming, NSK offers telephone assistance. NSK engineers are pleased to help you. Our local offices are listed in the last part of this catalogue. Call local NSK office or representative in your area.

(3) Additional machining (processing) some part of standard ball screws in stock
NSK processes half-finished series in stock (e.g. ball screws of S Series and R Series). NSK also cuts linear guide rails to required length for you. Service is available at NSK processing factories throughout the world. Requests are taken by branch offices and agencies.

www.bergab.ru Берг АБ bergab@ya.ru Тел. (495)-228-06-21, факс (495) 223-3071

www.bergab.ru Берг АБ bergab@ya.ru Тел. (495)-228-06-21, факс (495) 223-3071

B-I-10 Precautions When Handling Ball Screws

Ball screws are precision products. They require careful handling as described below.

Confirm lubrication

Lubrication

(1) Confirm the state of lubrication before use. Insufficient lubrication causes loss of ball screw functions in a short period.

(2) Use without lubrication if grease is already applied to the ball screws. Remove dust or swarf if they stuck to the greased surface during handling. Wipe with clean white kerosene, then apply the same type of new lubricant before use. Avoid using different types of grease at the same time.

Consult NSK for special oil lubricant if it is required to your application.

(3) Check lubricant after two to three months of operation. Wipe off grease if it is excessively contaminated, and apply sufficient volume of a fresh coat of grease. After the initial check, check and replenish lubricant approximately every year. Check more often if environment requires.

* Refer to Pages B525 and D13 for lubrication.

Do not disassemble

Do not reassemble

Watch out for falling objects

Handle with care

Do not apply shock

Handling

(1) Never disassemble ball screw. It invites dust to enter, and lowers precision, or may cause an accident.

(2) User should never reassemble ball screw by himself. Loss of ball screw function is apt to occur if a mistake is made. Please send ball screw to NSK for repair or re-assembly. It will be reworked at the minimum service charge.

(3) Ball screw shaft or nut may fall due to its own weight. Watch out for such falling object. If it falls, the ball groove or ball recirculation component may be damaged and the function might have been lost. Make certain to return such item to NSK for check. There will be the minimum charge for this service.

(4) If recirculation component, shaft outside, or ball groove is scratched or damaged by impact, recirculation operation becomes deficient, and may cause loss of function.

* Refer to Page B531 for assembling components.

Prevent dust

Rotational speed limitation

Do not overrun

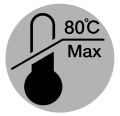

Temperature limitation

Precautions in use

(1) Ball screws should be used in a clean environment. Use a dust cover to keep dust and swarf from entering into the system. Insufficient dust protection causes not only the ball screw function to deteriorate but also brings about damage to the recirculation components if dust plugs the system. This may result in more serious accident such as a fall of the table.

(2) For rotational speed in operation, refer to the applicable section in this catalogue which describes permissible rotational speeds, or to specification drawing furnished by NSK. Exceeding permissible rotational speed damages recirculation components, and may cause the table to fall. A precaution system such as a safety nut is recommended in vertical use of ball screw. Please consult NSK for safety system.

(3) Overrunning ball nut (removed from the ball thread) causes the balls to fall out, damages recirculation components, and dent ball groove, resulting in insufficient operation. Continued use under such conditions may cause premature wear, and damages recirculation components. For these reasons, avoid overrun by all means. If overrun occurs, please request NSK to check. There will be a minimum charge for this service.

(4) Ball screws are designed to be used at a temperature of less than 80℃. Do not operate at temperatures higher than this limit. Use at a higher temperature may damage recirculation and seal components. Please consult NSK if it is necessary to use at a temperature higher than the limit.

* Please read Page B538 before designing.

Store in the correct position

Storage

(1) Store in the original NSK package. Do not unwrap or tear the inner wrapping if it is not necessary. This allows dust to enter and rust to set in, and may deteriorate functions.

(2) The following position is recommended when storing ball screws.

① Keep in the NSK original package, and place it flat.

② Place flatly on supports; store in a clean area.

③ Hang vertically in a clean place.

www.bergab.ru Берг АБ bergab@ya.ru Тел. (495)-228-06-21, факс (495) 223-3071

www.bergab.ru Берг АБ bergab@ya.ru Тел. (495)-228-06-21, факс (495) 223-3071

B-Ⅱ Technical Description of Ball Screws

B-Ⅱ-1 Accuracy

B-Ⅱ-1.1 Lead Accuracy

The lead accuracy of NSK precision ball screws (C0-C5 grades) conforms to the four characteristics specified in JIS Standards. These characteristics are expressed by codes *ep*, υ_u, υ_{300}, and $\upsilon_{2\pi}$.
Fig. Ⅱ-1•1 explains the definition of each characteristic, and shows allowable value of each. Leads are classified into two categories: C system for positioning; Ct system for transportation. Table Ⅱ-1•2, 3 and 4 show tolerance of each characteristic.

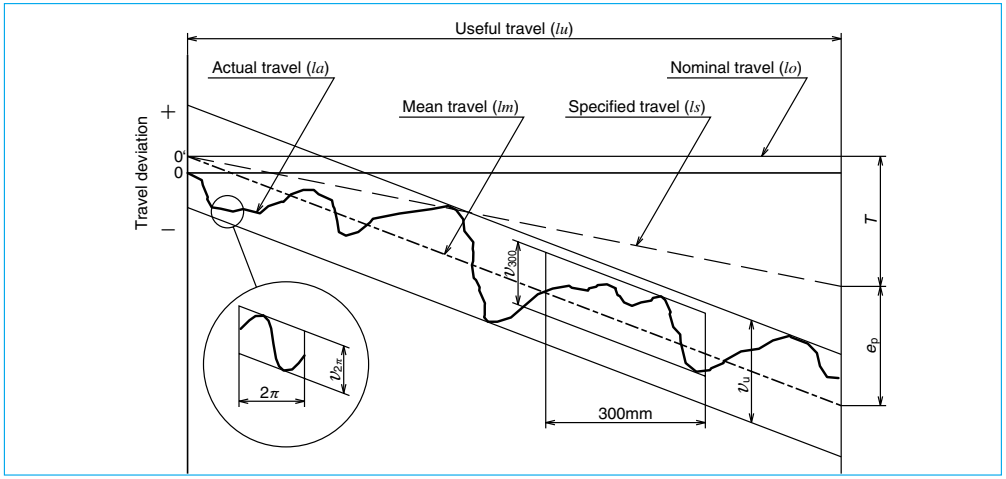

Fig. Ⅱ-1•1 Definition of lead accuracy

Table Ⅱ-1•1 Terminology in lead accuracy

Term	Code	Description	Tolerance
Specified travel	*ls*	The travel compensates the nominal travel for an elongation caused by an increase of temperature or load.	
Travel compensation	*T*	Value obtained by subtracting the specified travel from the nominal travel based on the useful travel. The value is to compensate for the errors caused by thermal deformation or deformation by load.This value is determined by tests and experience (See Page B501).	
Actual travel	*la*	Actually measured travel	
Actual mean travel	*lm*	A straight line that demonstrates the direction of actual travel. This straight line is obtained from the curve that shows actual travel volume by least-squares method or by resembling approximation.	
Tolerance on specified travel	*ep*	Obtained by subtracting the specified travel from the actual mean travel.	Table Ⅱ-1•2
Travel variation	υ_u υ_{300} $\upsilon_{2\pi}$	Maximum range of the actual travel which is between the two straight lines drawn parallel to the actual mean travel. There are three categories as shown below. • Maximum range relative to the effective length of thread. • Maximum range relative to the length of 300 mm anywhere within the effective length of thread. • Maximum range which corresponds to any single rotation (2π *rad.*) within the effective length of thread.	Table Ⅱ-1•2 Table Ⅱ-1•3, 4 Table Ⅱ-1•3

Table Ⅱ-1•2 Tolerance on specified travel (±*ep*) and travel variation (υ_u) of the positioning (*C* type) ball screws

Unit: μm

Accuracy grade			C0		C1		C2		C3		C5	
Effective thread length mm	over	or less	±*ep*	υ_u	±*ep*	υ_u	±*ep*	υ_u	±*ep*	υ_u	±*ep*	υ_u
	—	100	3	3	3.5	5	5	7	8	8	18	18
	100	200	3.5	3	4.5	5	7	7	10	8	20	18
	200	315	4	3.5	6	5	8	7	12	8	23	18
	315	400	5	3.5	7	5	9	7	13	10	25	20
	400	500	6	4	8	5	10	7	15	10	27	20
	500	630	6	4	9	6	11	8	16	12	30	23
	630	800	7	5	10	7	13	9	18	13	35	25
	800	1000	8	6	11	8	15	10	21	15	40	27
	1000	1250	9	6	13	9	18	11	24	16	46	30
	1250	1600	11	7	15	10	21	13	29	18	54	35
	1600	2000			18	11	25	15	35	21	65	40
	2000	2500			22	13	30	18	41	24	77	46
	2500	3150			26	15	36	21	50	29	93	54
	3150	4000			30	18	44	25	60	35	115	65
	4000	5000					52	30	72	41	140	77
	5000	6300					65	36	90	50	170	93
	6300	8000							110	60	210	115
	8000	10000									260	140
	10000	12500									320	170

Table Ⅱ-1•3 Tolerance of travel variation relative to 300 mm (υ_{300}) and one revolution ($\upsilon_{2\pi}$) of the positioning (*C* type) ball screws

Unit: μm

Accuracy grade	C0	C1	C2	C3	C5
υ_{300}	3.5	5	7	8	18
$\upsilon_{2\pi}$	2.5	4	5	6	8

Remarks 1. JIS B1192 sets C type and Cp type standards for positioning ball screws. NSK uses the specification of C type only.
2. ▭ to JIS B1192 standards. Values in other areas are NSK standards.

Table Ⅱ-1•4 Travel variation (υ_{300}) relative to 300 mm of the transportation (*C*t type) ball screws

Unit: μm

Accuracy grade	Ct7	Ct10
υ_{300}	52	210

Remarks 1. Tolerance on specified travel (*ep*) of the transportation (*C*t type) ball screws is calculated as follows.

$$ep = \frac{2 \cdot lu}{300} \cdot \upsilon_{300}$$

2. JIS B1192 specifies Ct1, 3, and 5 grade. NSK standards are integrated by C type only. Refer to Table Ⅱ-1•2 for C type standard tolerance.

www.bergab.ru Берг АБ bergab@ya.ru Тел. (495)-228-06-21, факс (495) 223-3071

www.bergab.ru Берг АБ bergab@ya.ru Тел. (495)-228-06-21, факс (495) 223-3071

[Example of specifying lead accuracy]
Conditions
Nut model: DFT 4010-5;
Stroke: 1000 mm; Positioning accuracy: ± 0.035 mm / 1000 mm
Obtain required lead accuracy of a ball screw under these conditions.
① Calculate the length of the thread of the screw shaft
Stroke + nut length + margin = 1000 +193+100 = 1293 (mm) ···→ 1300 mm
② Calculate lead accuracy
From Table II-1.2, obtain the tolerance on specified travel relative to the length of thread (1300 mm).
C5 −−−−→ ± 0.054/1250 ~ 1600
C3 −−−−→ ± 0.029/1250 ~ 1600
③ Determine lead accuracy
Required lead accuracy is:
From $\pm ep < \pm 0.035$/1000mm stroke

Accuracy grade: C3 grade $\pm ep = 0.029$/length of thread (1300 mm)
$\upsilon_u = 0.018$

B-Ⅱ-1.2 Thermal Expansion and Target Value of Specified Travel

(1) Thermal expansion

Thermal expansion of screw shaft induces the degradation of positioning accuracy of the ball screws. Thermal expansion of a screw shaft is calculated as follows.

$\Delta L_\theta = \rho \cdot \theta \cdot L$(mm) -- (Ⅱ-1)

In this formula:

ΔL_θ: Thermal expansion (mm)
ρ : Thermal expansion coefficient(12.0×10^{-6} ℃$^{-1}$)
θ : Average temperature rise of screw shaft (Celsius)
L : Length of screw shaft (mm)

The above formula indicates that when the temperature rises one degree Celsius, the screw shaft stretches 12 μm per meter. Ball screw generates more heat when it is used at high speed. This causes elongation of the screw shaft. Although the ball screw lead is ground into high precision, an elongated screw shaft due to high temperature rise may not satisfy required highly accurate positioning.

Countermeasures against temperature rise of the ball screw are:

① Suppress heat generation
- Do not apply excessive preload to the ball screw and support bearing.
- Select correct lubricant and use it appropriately.
- Use higher helix ball screw lead to lower rotational speed.

② Use forced cooling.
- Use hollow screw shaft, and flow liquid coolant through it. - Refer to hollow ball screws in the section for special ball screws (chapter B-Ⅰ-8•5).
- Cool screw shaft surface with lubricant oil or air.

③ Avoid effects of temperature rise on positioning
- Warm up the machine by high speed until temperature rise saturate, then maintain a stable temperature of ball screw shaft.
- Pull screw shaft in the axial direction at time of installation (Fig. Ⅱ-1•2).
- Set the negative (minus) target value of specified travel.
- Employ the closed loop control system.

NSK strongly recommends forced cooling by the use of a hollow ball screw as it is the most effective thermal error countermeasure for high-speed and high-precision ball screw.

(2) How to determine specified travel

In general, the specified travel of ball screw is the same as the nominal travel . However, the specified lead of ball screw is sometimes set to negative (minus) or positive (plus) to adjust expansion by temperature rise during operation, or the elongation/contraction of the screw shaft by external load. For such occasion, specify travel compensation (T) when ordering the ball screw.

As an example, Table Ⅱ-1•5 shows the travel compensation (T) for typical NC machine tools.

Table Ⅱ-1•5 Travel compensation (T) of specified travel for typical NC machine tools

Unit: mm

Type of machine	Axis	Travel compensation (per 1m)
NC lathe	X	– 0.02 ~ – 0.05
	Z	– 0.02 ~ – 0.03
Machining center	X、Y	– 0.03 ~ – 0.04
	Z	Differs by structure

In order to absorb thermal expansion, pre-tension can be provided to the screw shaft at the time of installation. In this case, the pre-tension is usually equivalent to the expansion brought about by the temperature rise of 2 to 3℃.

Fig. Ⅱ-1•2 shows the bearing support structure in such occasion.

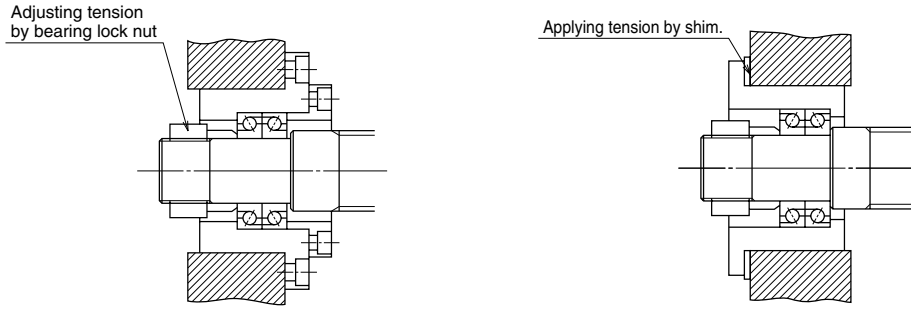

Fig. Ⅱ-1•2 Bearing structure to provide pre-tension

B-Ⅱ-1.3 Mounting Accuracy and Tolerance of Ball Screws

The accuracy related to mount the ball screws is specified in the following seven characteristics (Fig-Ⅱ-1.3). The tolerance is indicated in the specification drawing.

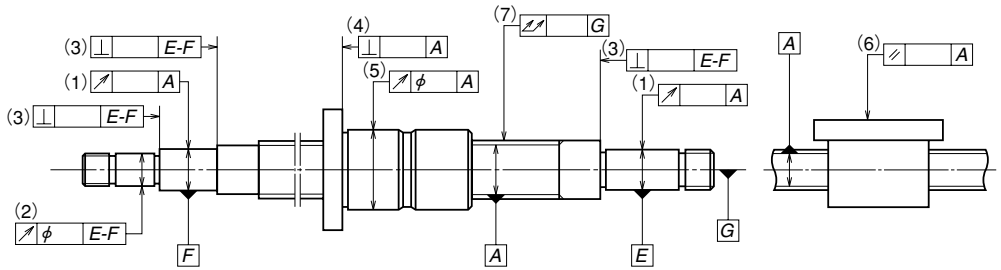

Fig. Ⅱ-1•3 Mounting accuracy of ball screw

(1) Radial run-out of the support bearing seat relative to the axis of the ball thread of screw shaft.
(2) Radial run-out of the other shaft ends section relative to the axis of the support bearing seat.
(3) Perpendicularity of the shoulder of support bearing seat relative to the axis of support bearing seat.
(4) Perpendicularity of the nut flange face, or of the nut end datum face, relative to the axis of screw shaft.
(5) Eccentricity of the nut outside surface (cylindrical shape) to the axis of screw shaft.
(6) Parallelism of the nut mounting surface to the screw shaft axis. (in case of flat mounting surface)
(7) Total run-out of the screw shaft axis.

Detailed tolerances are specified by JIS B1192. For reference, Table Ⅱ-1•6 shows standard values of "(7) Total run-out of the screw shaft axis (straightness of the screw shaft)". NSK sets stricter tolerance standards than JIS standards. For accuracy of the ball screw installation, refer to "Technical Description: Recommended Mounting Error" (Page B531).

www.bergab.ru Берг АБ bergab@ya.ru Тел. (495)-228-06-21, факс (495) 223-3071

www.bergab.ru Берг АБ bergab@ya.ru Тел. (495)-228-06-21, факс (495) 223-3071

Table Ⅱ-1•6 Total run-out of the screw shaft axis

Unit: μm

Accuracy grade		C0						C1						
Nominal diameter (mm) over			8	12	20	32	50		8	12	20	32	50	80
Nominal diameter (mm) or less		8	12	20	32	50	80	8	12	20	32	50	80	125
Overall length of screw shaft (mm) over	or less													
	125	15	15	15				20	20	15				
125	200	25	20	20	15			30	25	20				
200	315	35	25	20	20			40	30	25	20			
315	400		35	25	20	15		45	40	30	25	20		
400	500		45	35	25	20			50	40	30	25		
500	630		50	40	30	20	15		60	45	35	25	20	
630	800			50	35	25	20			60	40	30	25	
800	1000			65	45	30	25			75	55	40	30	25
1000	1250			85	55	40	30			95	65	45	35	30
1250	1600			110	70	50	40			130	85	60	45	35
1600	2000				95	65	45				120	80	55	40
2000	2500											100	70	50
2500	3150												130	90
3150	4000													120
4000	5000													

Unit: μm

Accuracy grade		C3							C5						
Nominal diameter (mm) over			8	12	20	32	50	80		8	12	20	32	50	80
Nominal diameter (mm) or less		8	12	20	32	50	80	125	8	12	20	32	50	80	125
Overall length of screw shaft (mm)															
	over	or less													
		125	25	25	20					35	35	35			
	125	200	35	35	25	20				50	40	40	35		
	200	315	50	40	30	30				65	55	45	40		
	315	400	60	50	40	35	25			75	65	55	45	35	
	400	500		65	50	40	30				80	60	50	45	
	500	630		70	55	45	35	30			90	75	60	50	40
	630	800			70	55	40	35				90	70	55	45
	800	1000			95	65	50	40	30			120	85	65	50	45
	1000	1250			120	85	60	45	35			150	100	75	60	50
	1250	1600			160	110	75	55	40			190	130	95	70	55
	1600	2000				140	95	70	50				170	120	85	65
	2000	2500					120	85	60					150	110	80
	2500	3150					160	110	75					200	140	95
	3150	4000					220	150	100					260	180	120
	4000	5000						200	130						240	160
	5000	6300													310	210
	6300	8000														280
	8000	10000														370

Automatic lead accuracy measuring system

In response to the demand for high precision in production technology, NSK is the first in the world that developed and uses "Lead Accuracy Measuring System (LAMS)." Lead accuracy is measured by the system that employs a laser interferometer measuring instrument and a personal computer.
The figure right shows the basic composition of this system. The laser interferometer measures either ball nut travel accuracy or lead accuracy of the ball thread. The data which are input into a computer are processed into four characteristics readings regarding lead accuracy. (See Page B499.)

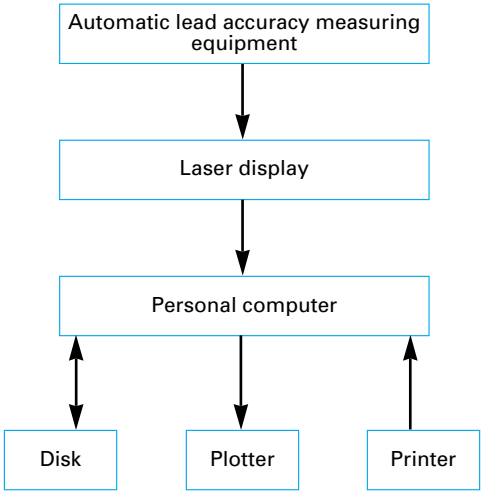

Lead Accuracy Measuring System

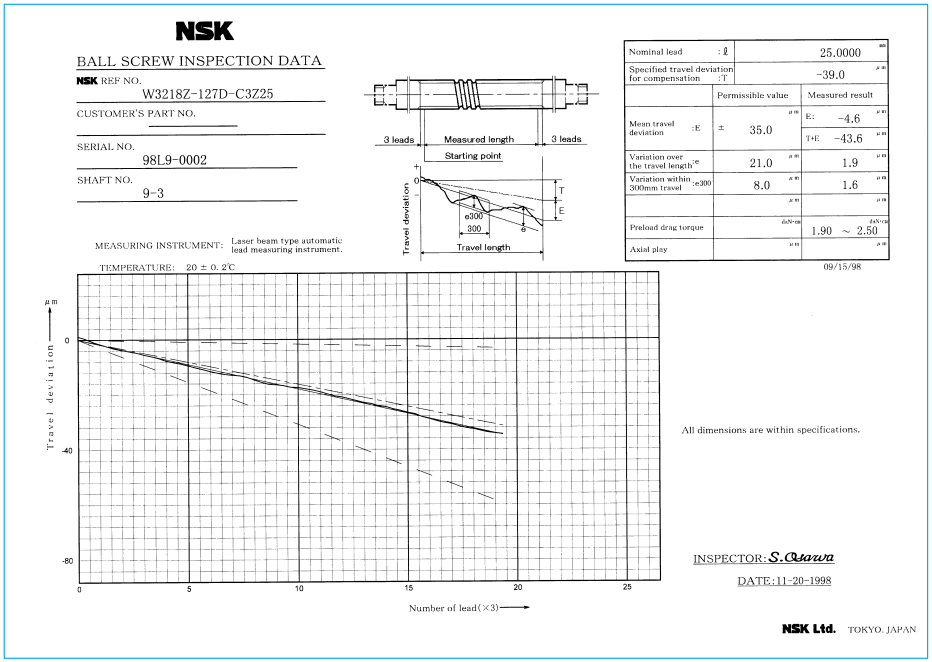

www.bergab.ru Берг АБ bergab@ya.ru Тел. (495)-228-06-21, факс (495) 223-3071

www.bergab.ru Берг АБ bergab@ya.ru Тел. (495)-228-06-21, факс (495) 223-3071

B-Ⅱ-2 Static Load Limitation

Prior to estimating fatigue life by repeated load described in the following section 5, it is necessary to calculate damage by static load. Static load limit is determined by the three following factors.

- Buckling of the ball screw shaft
- Yielding of the ball screw shaft by tensional orcompressive stress
- Permanent deformation at the ball contact points

B-Ⅱ-2.1 Buckling Load

It is necessary to calculate whether the ball screw shaft is safe against buckling.
Buckling load, i.e. permissible compressive load "P" to axial direction, is calculated as follows.

$$P=\alpha\times\frac{N\cdot\pi^2\cdot E\cdot I}{L^2}=m\frac{d_r^4}{L^2}\times10^4 \qquad \text{(N)}\cdots\cdots(\text{Ⅱ-2})$$

In this formula:

α : Safety factor (α = 0.5)
E : Elastic modulus (E = 2.06 x 10^5 MPa)
I : Moment of inertia

$$I=\frac{\pi}{64}d_r^4 \qquad (\text{mm}^4)\cdots\cdots(\text{II-3})$$

d_r : Screw shaft root diameter (mm) [See the dimension table.]
L : Unsupported length (mm) [See Fig Ⅱ-4•1, 2 'Supporting conditions of screw shaft and nut' in Page B513.)
m, N : Factors determined by the supporting method of the ball screw shaft

Supporting method	m	N
Fixed - Fixed support	19.9	4
Fixed - Simple support	10.0	2
Fixed support - Free	1.2	0.25
Simple - Simple support	5.0	1

Fig Ⅱ-2•1 are the graphs of buckling load limitation for each nominal diameter of screw shaft. (Use the above formula if nominal diameter of screw shaft exceeds 125 mm.)

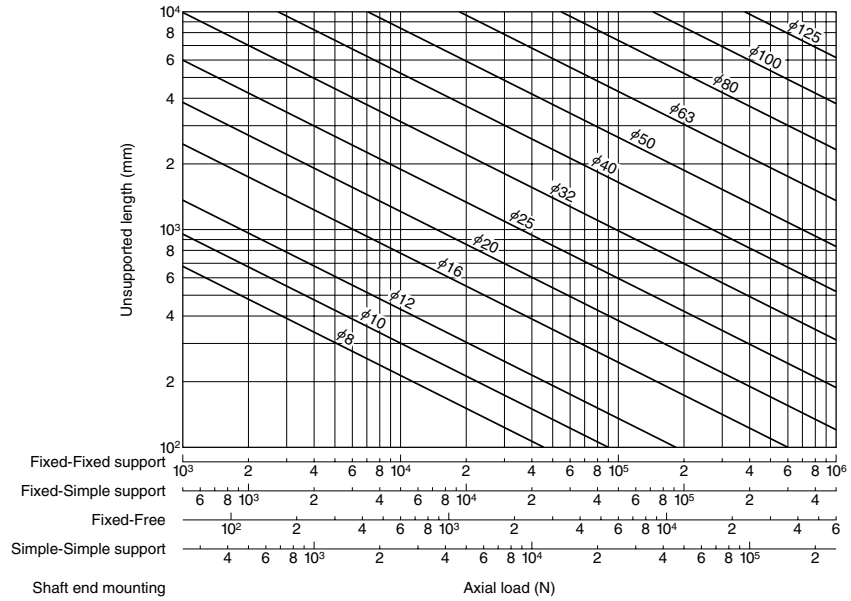

Fig. Ⅱ-2•1 Buckling load

www.bergab.ru Берг АБ bergab@ya.ru Тел. (495)-228-06-21, факс (495) 223-3071

www.bergab.ru Берг АБ bergab@ya.ru Тел. (495)-228-06-21, факс (495) 223-3071

Example of calculation

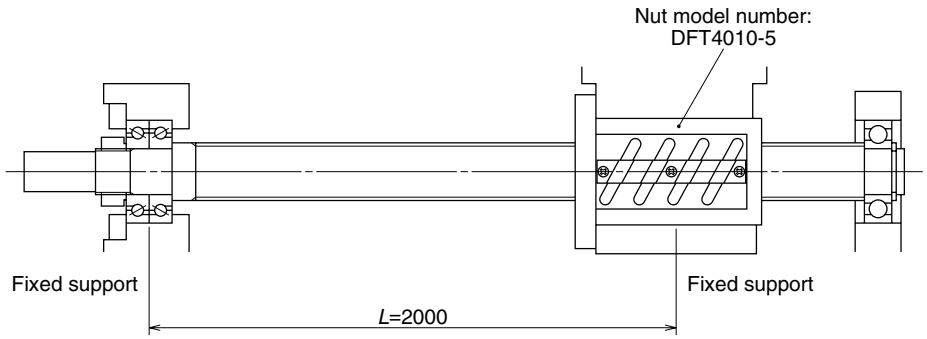

Fig. Ⅱ-2•2 Calculation example of buckling load

Calculate buckling load under the conditions in Fig. Ⅱ-2•2.

* Use conditions

Nut model: DFT4010-5

From Fig. Ⅱ-2•2 - support condition is Fixed - Fixed support

⟶ $N = 4$; $m = 19.9$

(Same as the supporting condition (ii) in Fig. Ⅱ-4•1 'Supporting conditions of screw shaft and nut' in Page B513.)

Unsupported length $L = 2000$ mm

From the dimension table - Screw shaft root diameter

$d_r = 34.4$ mm

* Calculation

By Formula (Ⅱ-2)

$$P = m\frac{d_r^4}{L^2} \times 10^4 = 19.9 \times \frac{34.4^4}{2000^2} \times 10^4 = 69667 \text{(N)}$$

* Result

Permissible buckling load $P = 69600$ N

B-Ⅱ-2.2 Yield by Tensional/Compressive load

Buckling does not occur to the screw shaft if unsupported length is short. However, it is necessary to calculate tensional or compressive stress by the axial direction load (Formula Ⅱ-4).

Formula to obtain permissible load "P" by tensional or compressive stress to screw shaft.

$P = \sigma \cdot A = 1.15 d_r^2 \times 10^2$ (N) -- (Ⅱ-4)

In this formula:

σ: Allowable stress (=147 MPa)

A: Cross section area of a screw shaft using root diameter

$A = \frac{\pi}{4} d_r^2$ (Ⅱ-5)

d_r: Screw shaft root diameter (mm)

Example of calculation

Obtain load in respect to the allowable stress under the conditions in Fig. Ⅱ-2•2.

* Use conditions

Nut model: DFT4010-5

From the dimension table - Screw shaft root diameter

$d_r = 34.4$ mm

* Calculation

By Formula Ⅱ-4

$P = 1.15\ d_r^2 \times 10^2 = 1.15 \times 34.4^2 \times 10^2 = 136086$(N)

* Result

Load with respect to allowable stress $P = 136000$ N

B-Ⅱ-2.3 Permanent Deformation of the Ball Contact Point

Exposed to an excessively heavy load in axial direction, the balls are squashed, and the ball rolling surface is dented. The deformations on these points do not perfectly restore to original shape after the load is removed. They are permanently disfigured. It is necessary to determine the limitation of this disfigurement to containing it within a certain range.

(1) Basic static load rating C_{0a}

Basic static load rating C_{0a} is a load to axial direction that results in the combined permanent deformation equal to 0.01% of the ball diameter at the contact points of ball and ball grooves of the screw shaft and nut.

(2) Calculation of permissible load by C_{0a}

P_o (allowable axial direction load to limit the permanent deformation) is calculated using *Coa*.

$P_0 = C_{0a}/f_s$ (N) - (Ⅱ-6)

In this formula:

f_s: Static permissible load factor	
At time of normal operation	1~2
With vibration impact	1.5~3

B 508

www.bergab.ru Берг АБ bergab@ya.ru Тел. (495)-228-06-21, факс (495) 223-3071

www.bergab.ru Берг АБ bergab@ya.ru Тел. (495)-228-06-21, факс (495) 223-3071

Calculation example

Obtain maximum allowable load to the ball groove section under conditions in Fig. Ⅱ-2•2

* Use conditions

Nut model: DFT4010-5

From the dimension table C_{0a} = 137000 (N)

f_s=2 (normal operation, no vibration impact)

* Calculation

By Formula Ⅱ-6:

$P_0 = C_{0a}/f_s$ = 137000/2 = 68500 (N)

* Result

Maximum allowable load of the ball groove section

P_0 = 68500 N

B-Ⅱ-3 Permissible Rotational Speed

Permissible rotational speed is determined by the following two factors:

- Critical speed which is the resonance vibration of the shaft.
- d・n value which is involved in damaging the ball recirculation components.

B-Ⅱ-3.1 Critical Speed of the Screw Shaft

Calculate the critical speed which is the matching value of the ball screw rotational speed and the natural frequency of the screw shaft. The permissible rotational speed is up to the 80% range of the critical speed. Refer to Page B459 "Supporting conditions of screw shaft and ball nut" and use the formula below to calculate critical speed. Fig. Ⅱ-3•1 shows permissible rotational speeds to critical speed for each screw shaft diameter.

(Use the formula below if screw shaft nominal diameter exceeds 125 mm.)

Formula to calculate permissible rotational speed to the critical speed

$$n_c = \alpha \times \frac{60\lambda^2}{2\pi L^2}\sqrt{\frac{E \cdot I \cdot g}{\gamma \cdot A}} = f\frac{d_r}{L^2} \times 10^7 \ (\mathrm{min}^{-1}) \cdots (\text{Ⅱ-7})$$

In this formula:

α: Safely factor (α = 0.8)

E: Elastic modulus (E = 2.06 x 10^5 MPa)

I: Moment of inertia of area of screw shaft

$$I = \frac{\pi}{64} d_r^4 \quad (\mathrm{mm}^4) \cdots (\text{Ⅱ-3})$$

d_r: Screw shaft root diameter (mm) [See the dimension table.]

g: Acceleration of gravity (= 9.8 ×10^3mm/s^2)

γ: Specific weight (γ = 7.65 x 10^{-5}N/mm^3)

A: Cross section area of the screw shaft root diameter (mm^2)

$$A = \frac{\pi}{4} d_r^2 \quad (\mathrm{mm}^2) \cdots (\text{Ⅱ-5})$$

L: Unsupported length (mm) [See Fig. Ⅱ-4•1, 2 'Supporting conditions of screw shaft and ball nut' on Page B513]

f、λ: Factors determined by the supporting condition

Supporting condition	f	λ
Fixed - Simple support	15.1	3.927
Fixed - Fixed support	21.9	4.730
Fixed support - Free	3.4	1.875
Simple - Simple support	9.7	π

Calculate the resonance of the screw shaft whether you use shaft rotation or nut rotation. Critical speed varies by the nut traveling position. Please consult NSK for detailed calculation.

If using a ball acrew exceeding the critical speed, it is necessary to increase the natural frequency by using an intermediate support, etc. If using with nut rotation, it is possible to operate exceeding critical speed by installing a vibration energy absorbing system (optional, vibration control damper: patented by NSK) to the screw shaft. (Refer to "Nut rotatable ball screws" in Page B469.)

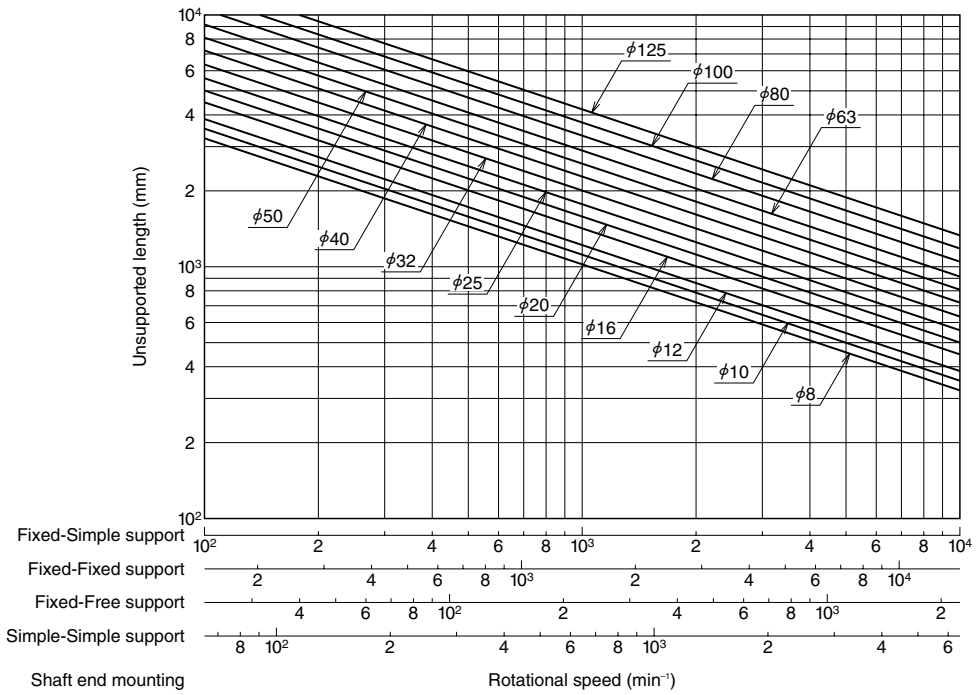

Fig. Ⅱ-3•1 Permissible rotational speeds vs. critical speeds

B 510

www.bergab.ru Берг АБ bergab@ya.ru Тел. (495)-228-06-21, факс (495) 223-3071

www.bergab.ru Берг АБ bergab@ya.ru Тел. (495)-228-06-21, факс (495) 223-3071

Calculation example

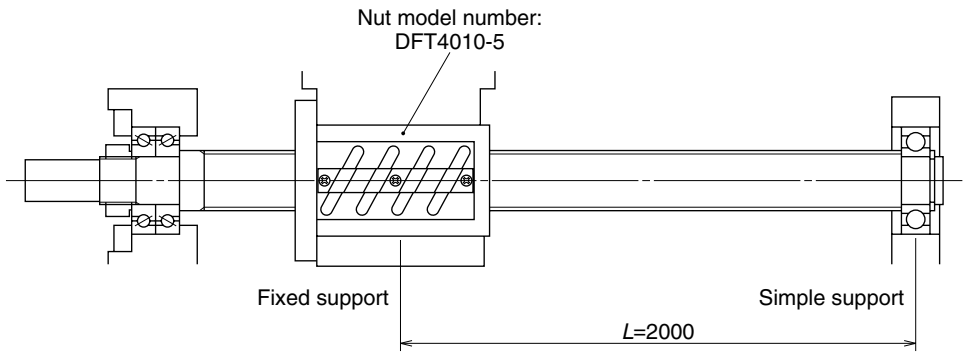

Fig. Ⅱ-3•2 Calculation example of ball screw permissible rotational speed

Calculate the permissible rotational speed to the critical speed under conditions in Fig. Ⅱ-3•2.

* Use conditions

Nut model: DFT4010-5

From Fig. Ⅱ-3•2 - Supporting condition is Fixed - Simple support

$\longrightarrow \lambda = 3.927$、$f = 15.1$

(Same as the supporting condition (ii) in Fig. Ⅱ-4•1 'Supporting conditions of screw shaft and ball nut.')

Unsupported length L = 2000 mm

From the dimension table: Screw shaft root diameter

d_r = 34.4 mm

* Calculation

By Formula Ⅱ-7

$$n_c = f\frac{d_r}{L^2} \times 10^7 = 15.1 \times \frac{34.4}{2000^2} \times 10^7 = 1298.6(\text{min}^{-1})$$

* Result

Permissible rotational speed to critical speed

n_c = 1290 min^{-1} or under

B-Ⅱ-3.2 d • n Value

Permissible rotational speed is also limited by d・n value (d : shaft dia mm; n: rotational speed per minute min^{-1}). d・n value indicates peripheral speed (revolution speed of balls).

Table Ⅱ-3•1

For positioning type (C5 grade or higher),	Standard specification	d・n ≦ 70000	
For transporting type (Ct7 grade)	High-speed specification	d・n ≦ 100000	※1
For transportation type (Ct10 Grade)		d・n ≦ 50000	

Special measure is taken for high-speed specification products. Operating exceeding the limitation is possible under certain conditions. Please consult NSK.

* Please consult NSK if the maximum rotational speed exceeds 3000 min^{-1}, even both the critical speed of the screw shaft rotation and the d・n value are in ranges of the allowable limit.

※1

- Refer to HMC Series for the ball screw for high speed machine tools.
- Refer to BSS Series for the high speed and low noise ball screws.

www.bergab.ru Берг АБ bergab@ya.ru Тел. (495)-228-06-21, факс (495) 223-3071

www.bergab.ru Берг АБ bergab@ya.ru Тел. (495)-228-06-21, факс (495) 223-3071

B-Ⅱ-4 Supporting Conditions for Calculation of Buckling Load and Critical Speed

B-Ⅱ-4•1 and 2 are typical conditions in supporting ball screw. Use them as reference to calculate buckling load and critical speed.
Please consult NSK if it is necessary to scrutinize calculation due to use conditions, or if boundary conditions are not clear due to special installation.

[How to read the tables]
Example ii: Buckling load generates between the nut and the left bearings, indicating that the critical speed appears between the nut and the right bearing. Therefore, set L at maximum stroke for each side. Calculate by applying support bearing conditions.

i

Buckling load: Fixed - Fixed support
Critical speed: Fixed - Fixed support

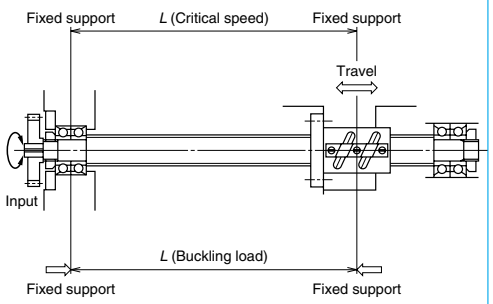

ii

Buckling load: Fixed - Fixed support
Critical speed: Fixed - Simple support

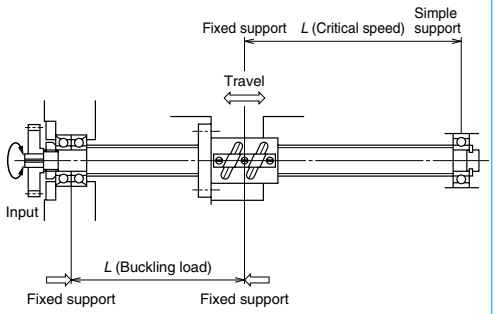

iii

Buckling load: Fixed - Fixed support
Critical speed: Fixed - Free support

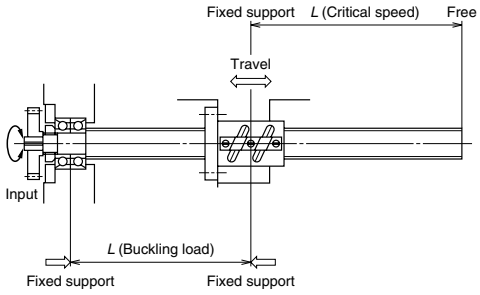

iv

Buckling load: Fixed - Simple support
Critical speed: Fixed - Simple support

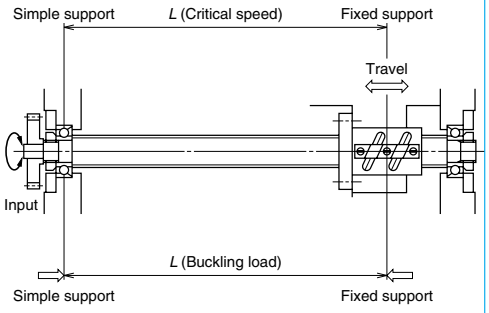

v

Buckling load: Fixed - Fixed support
Critical speed: Fixed - Fixed

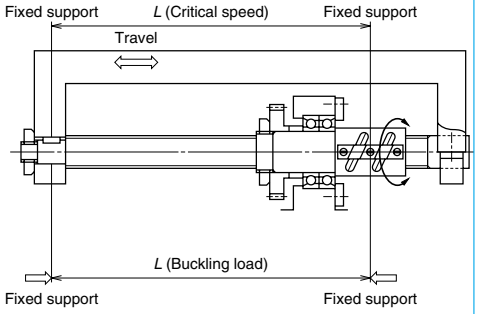

B-II-4.1 Supporting conditions for screw shaft and ball nut

vi

Buckling load: Fixed - Fixed support
Critical speed: Fixed - Fixed support
} Minimum value (estimate) is obtained in the state as shown in the figure.

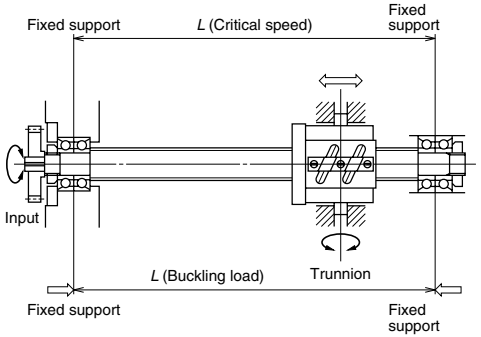

vii

Buckling load: Fixed - Fixed support
Critical speed: Fixed - Simple support
} Minimum value (estimate) is obtained in the state as shown in the figure.

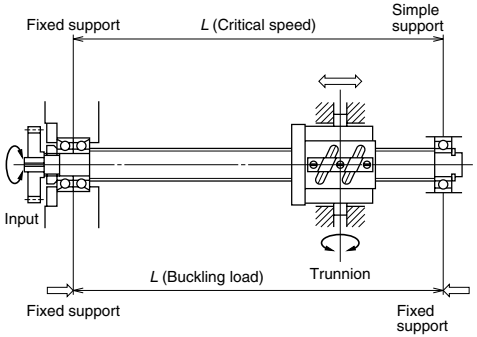

viii

Buckling load: Simple support - Simple support
Critical speed: Fixed - Free Support→ Minimum value (estimate) is obtained in the state as shown in the figure.

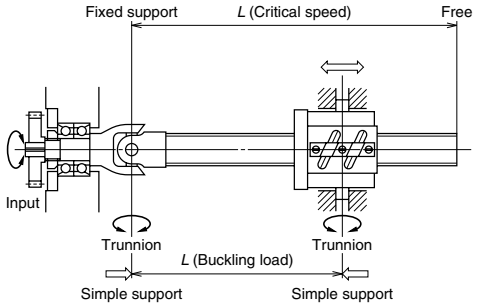

ix

Buckling load: Simple support - Simple support
Critical speed: Fixed - Free support→ Minimum value (estimate) is obtained in the state as shown in the figure.

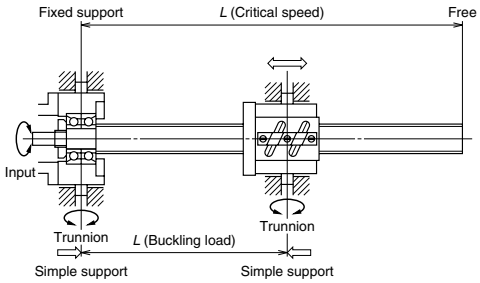

x

Buckling load: Fixed - Free Support
Critical speed: Fixed - Free support

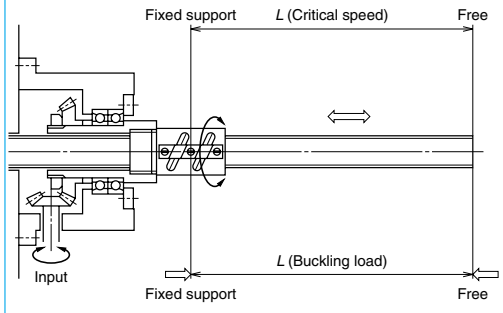

xi

Buckling load: Fixed - Fixed support
Critical speed: Fixed - Free support

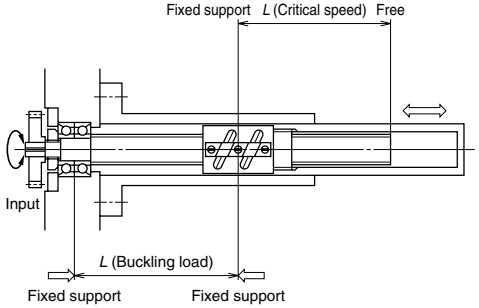

B-II-4.2 Supporting conditions of screw shaft and ball nut w

www.bergab.ru Берг АБ bergab@ya.ru Тел. (495)-228-06-21, факс (495) 223-3071

www.bergab.ru Берг АБ bergab@ya.ru Тел. (495)-228-06-21, факс (495) 223-3071

B-Ⅱ-5 Life (dynamic load limitation)

B-Ⅱ-5.1 Life of Ball Screw

Although used in appropriate conditions and is ideally designed, the ball screw deteriorates after a certain operation period, and eventually becomes unusable. The period in this situation is the life of the ball screw. There are two life categories, "fatigue life" caused by flaking, and "life of accuracy" caused by deterioration in precision because of wear.

B-Ⅱ-5.2 Fatigue Life

Fatigue life of the ball screw can be estimated by basic dynamic load rating (C_a) as is for the rolling bearing.

(1) Basic dynamic load rating C_a

Basic dynamic load rating is the axial load which allows a 90% of the group of the same ball screws to rotate 1 million times (10^6rev) under the same condition without causing flaking by rolling contact fatigue. Basic dynamic load ratings are shown in the dimension tables.

(2) How to calculate fatigue life

1. Life calculation

Fatigue life is defined as a total rotation number in general. It is sometimes indicated by total rolling hours or total running distance. Fatigue life is obtained by the following formula.

$$L=\left(\frac{C_a}{F_a\cdot f_w}\right)^3\cdot 10^6 \cdots \text{(Ⅱ-8)}$$

$$L_t=\frac{L}{60n} \cdots \text{(Ⅱ-9)}$$

$$L_s=\frac{L\cdot l}{10^6} \cdots \text{(Ⅱ-10)}$$

In this formula:

- L : Rating fatigue life (rev)
- L_t : Life in hours (h)
- L_s : Life by running distance (km)
- C_a : Basic dynamic load rating (N)
- F_a : Axial load (N)
- n : Rotational speed (min^{-1})
- l : Lead (mm)
- f_w : Load factor (Coefficient by operating condition)

Smooth operation without impact	1.0～1.2
Normal operation	1.2～1.5
Operation associated with impact or vibration	1.5～3.0

Setting too long fatigue life requires larger ball screw, and is not economical. Below are the general target values of operating life for machines. (reference)

Machine tools	20,000 hours
Industrial machines	10,000 hours
Automatic control system	15,000 hours
Measuring equipment	15,000 hours

(3) Mean load

If the axial load varies often, to calculate a life, obtain an mean load which gives equivalent fatigue life under this varying load conditions.

1. When load and rotational speed shift stepwise (Fig. Ⅱ-5.1)

Axial load (N)	Rotational speed (rpm)	Hours of use, or ratio of hours of use
F_1	n_1	t_1
F_2	n_2	t_2
:	:	:
F_n	n_n	t_n

Obtain the mean load Fm by the formula below.

$$F_m=\left(\frac{F_1^3\cdot n_1\cdot t_1+F_2^3\cdot n_2\cdot t_2+\cdots F_n^3\cdot n_n\cdot t_n}{n_1\cdot t_1+n_2\cdot t_2+\cdots+n_n\cdot t_n}\right)^{\frac{1}{3}} \cdots \text{(Ⅱ-11)}$$

Obtain mean rotational speed Nm by the formula below.

$$Nm=\frac{n_1\cdot t_1+n_2\cdot t_2+\cdots+n_n\cdot t_n}{t_1+t_2+\cdots+t_n} \cdots \text{(Ⅱ-12)}$$

2. When the rotational speed is constant, and the load changes linearly (Fig. II-5.2)

Obtain approximate value of the mean load Fm by the formula below.

$$F_m=\frac{1}{3}(F_{min}+2F_{max}) \cdots \text{(Ⅱ-13)}$$

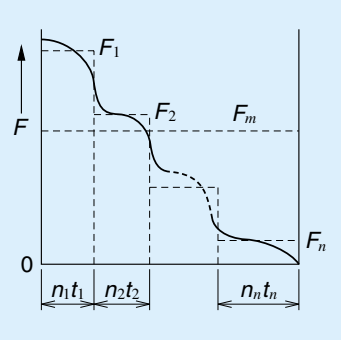

Fig. Ⅱ-5•1 Stepwise load variation

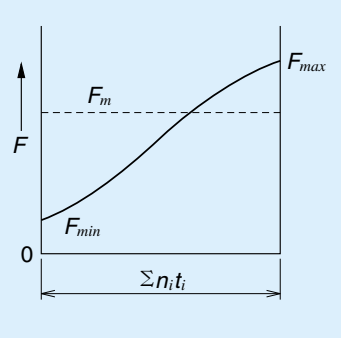

Fig. Ⅱ-5•2 Linear load change

3. When rotational speed is constant, and the load changes in sinusoidal pattern (Fig. Ⅱ-5•3)

Obtain approximate value of the mean load Fm by the formula below.

When the sine curve is Fig. (a)

$$F_m \fallingdotseq 0.65F_{max}$$

When the sine curve is Fig. (b)

$$F_m \fallingdotseq 0.75F_{max} \cdots \text{(Ⅱ-14)}$$

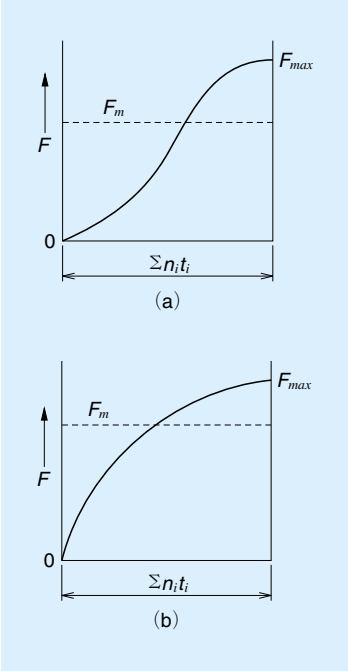

Fig. Ⅱ-5•3 Load changes in sinusoidal pattern (Fig. Ⅱ-5•3)

(4) Affect of mounting misalignment

If moment load or radial load is applied to the ball screw, it adversely affects ball screw function, and shortens life. Watch for eccentric load that induces moment or radial load.

Fig. Ⅱ-5.4 shows a calculation example of fatigue life when moment load is applied to the ball screw. In this figure, the value of the rigidity of mounting ball screw sections (screw shaft, support bearing, guide, etc.) is set at infinity. In actual use, deformation is absorbing the moment load in various areas, and the moment load that generates between the screw shaft and nut is abated.

In general, the following values are recommended as control values for precision grade.

Misalignment in inclination	1/2000 or under
Eccentricity	20 μm or under

www.bergab.ru Берг АБ bergab@ya.ru Тел. (495)-228-06-21, факс (495) 223-3071

www.bergab.ru Берг АБ bergab@ya.ru Тел. (495)-228-06-21, факс (495) 223-3071

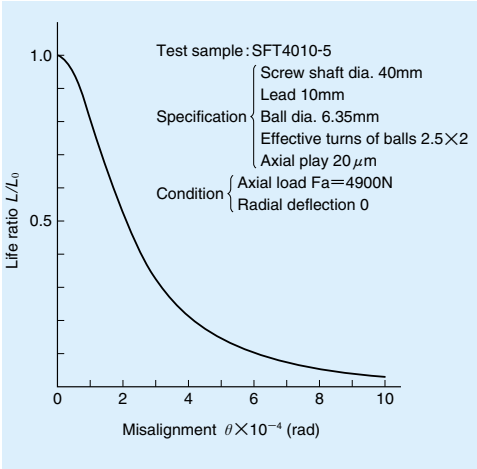

Fig. Ⅱ-5•4 Affects of misalignment

① Effects of heavy load and short stroke

If the ball screw is used under heavy load and short strokes, such as for drive of plastic injection molding machine and of press machines, the fatigue life may become significantly shorter than the rated fatigue life which is calculated in Ⅱ-5.2. This decreased life occurs because the heavy load generates large stress (surface pressure) in the contact point of balls and ball grooves of the screw shaft and the nut, adversely affecting the life. In such case, the life calculation should take into account the size of the surface pressure as well as the size of the stroke.

* Criterion for axial load during operation, that affects fatigue life

The axial load during operation and the size of stroke, which affect fatigue life, can be obtained by the following formula.

Please consult NSK if the load exceeds this value or if the stroke is shorter. NSK calculates fatigue life for drives under heavy load and short stroke.

* Axial load : The load is applied to the axial direction when screw shaft and the nut of ball screw are rotating relatively each other. The rotational speed is irrelevant.

$$F_{amax} \geqq 0.10 C_{0a} \cdots \text{(Ⅱ-15)}$$
$$S \leqq 4$$

In this formula:

F_{amax} : Maximum load to axial direction during drive (N)

C_{0a} : Basic dynamic load rating (N)

S : Stroke (rev) $S = L_s / l$

L_s : Stroke distance (mm)

l : Lead (mm)

B-Ⅱ-5.3 Materials and Hardness

NSK standard materials

Table Ⅱ-5•1 indicates NSK standard materials and their hardness.

Table Ⅱ-5•1 Ball screw materials and their hardness

Component	Material	Heat treatment method	Hardness (HRC)
Screw shaft	SCM415H SCM420H	Carburizing	58～62
	SAE4150	Induction hardening	58～62
Nut	SCM415H SCM420H	Carburizing	58～62

* NSK manufactures special material ball screws for special environments (stainless steel: SUS440C, SUS630). NSK also furnishes surface treatment (Refer to Page D5). Please consult NSK for such request.

B-Ⅱ-5.4 Wear Life

Wear of materials, as is the case for other mechanical components, is significantly affected by use conditions, lubrication conditions and other factors. It is difficult to estimate its volume, and measuring requires various tests and field data.

NSK has data of wear accumulated through abundant experience. Please contact NSK for inquiry pertaining to the wear.

B-Ⅱ-6 Preload and Rigidity

B-Ⅱ-6.1 Elastic Deformation of the Preloaded Ball Screw

(1) Position preload (D, Z, P preloads)

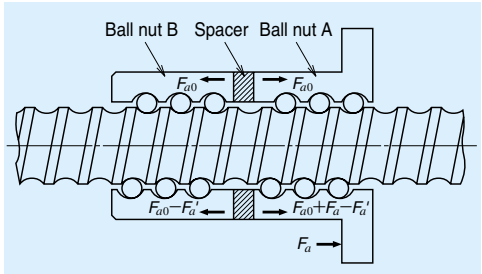

Fig. Ⅱ-6•1 Position preload (double-nut)

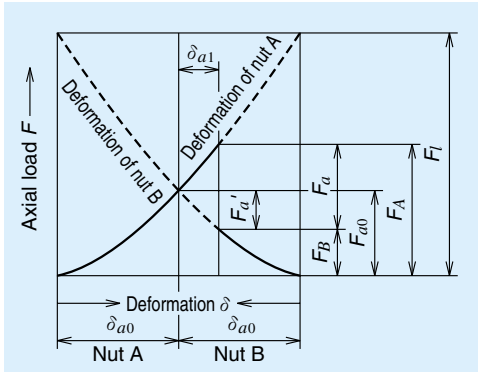

Fig. Ⅱ-6•2 Deformation of A and B nut (position preload)

In Fig. Ⅱ-6•1, elastic deformation of Nut A and B is already given at time of assembly by the amount of δa_o by preload F_{ao}. When the external load F_a is added to Nut A, the elastic deformation δa and δb of each Nut A and B change as shown in Fig. Ⅱ-6•2,

$$\delta a = \delta a_o + \delta a_1 \qquad \delta b = \delta a_o - \delta a_1$$

At this time, the load to each Nut A and B are:

$$F_A = F_{ao} + F_a - F_a'$$
$$F_B = F_{ao} - F_a'$$

It shows that the load applied to Nut A is affected by Nut B and reduced by the amount of F_a'. Thereby, the elastic deformation of Nut A becomes smaller. This effect continues until the elastic deformation by the external load becomes δa_o, and the preload by Nut B disappears.

Assuming that the load when the preload is absorbed is F_l, the relationship between the axial load and the elastic deformation is as follows.

$$\delta a_o = K \cdot F_{ao}^{2/3} \qquad 2\delta a_o = K \cdot F_l^{\frac{2}{3}}$$

(K: Invariable number)

$$\left(\frac{F_l}{F_{ao}}\right)^{2/3} = \frac{2\delta a_o}{\delta a_o} = 2$$

$$F_l = 2^{\frac{3}{2}} \times F_{ao} \fallingdotseq 3F_{ao}$$

For this reason, the preload should be about 1/3 of the maximum axial load. Please note that the preload of about 1/3 of the maximum axial load increases heat, and shortens life if it exceeds 10% of C_a. The criterion for the maximum preload is $0.1C_a$.

Fig. Ⅱ-6•3 shows two types of elastic deformation curves: one is by the ball screw with preload, the other without preload. When an axial load which is about three times as large as the preload is applied, the deformation of the preloaded ball screw is 1/2 of the deformation of the ball screw without preload.

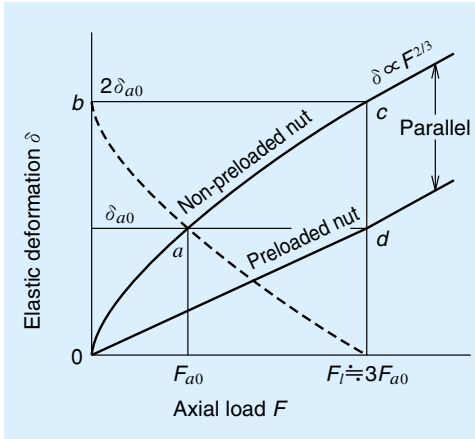

Fig. Ⅱ-6•3 Deformation of preloaded ball nut (position preload)

www.bergab.ru Берг АБ bergab@ya.ru Тел. (495)-228-06-21, факс (495) 223-3071

www.bergab.ru Берг АБ bergab@ya.ru Тел. (495)-228-06-21, факс (495) 223-3071

(2) Constant pressure preload (J preload: preloaded by spring)

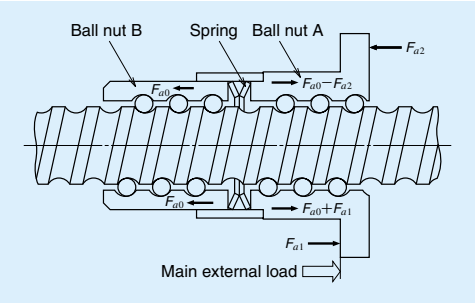

Fig. Ⅱ-6•4 Constant pressure preload (double nut)

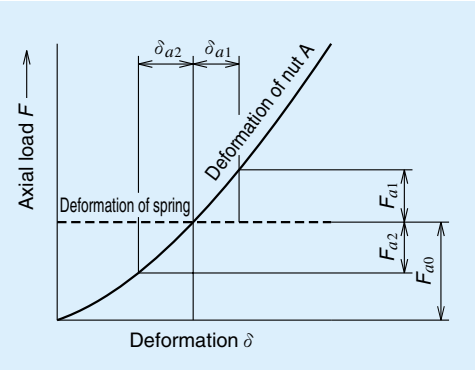

Fig. Ⅱ-6•5 Deformation curve of constant pressure preloaded nut

Fig. Ⅱ-6•5 shows an elastic deformation of the ball screw which is preloaded with "constant pressure." The rigidity of the preload spring is sufficiently smaller than the nut rigidity. Therefore, the deformation of the spring becomes nearly parallel to the axis of abscissa. For this reason, the elastic deformation by the preload with constant pressure changes along the deformation curve by Nut A. In order to take advantage of the characteristics of the preload with constant pressure, the major external load should be applied in the directions shown by arrows (Fig. Ⅱ-6•4.).

B-Ⅱ-6.2 Rigidity of the Feed Screw System

A low rigidity around the feed screw mounting area causes lost motion. To improve the positioning accuracy of precision machines such as NC machine tools, it requires a good balance in axial rigidities of composing parts of the feed screw system.
Also check torsional rigidities of the feed screw system.

(1) Axial rigidity of the feed screw system

① Axial elastic deformation and rigidity of the feed screw system: K_T
Elastic deformation and rigidity of the feed screw system can be obtained by the following formula.

$$\delta = \frac{F_a}{K_T} \quad \cdots\cdots (\text{Ⅱ-16})$$

$$\frac{1}{K_T} = \frac{1}{K_S} + \frac{1}{K_N} + \frac{1}{K_B} + \frac{1}{K_H} \quad \cdots\cdots (\text{Ⅱ-17})$$

In this formula:

δ : Volume of axial elastic deformation of the feed screw system (μm)
F_a : Axial load to the feed screw system (N)
K_T : Axial rigidity of the feed system (N/μm)
K_S : Axial rigidity of the screw shaft (N/μm)
K_N : Axial rigidity of the nut (N/μm)
K_B : Axial rigidity of the support bearing (N/μm)
K_H : Axial rigidity of the nut and bearing mounting section (N/μm)

② Axial rigidity of the screw shaft: K_S
(a) In case of: Fixed support - Free (axial direction)
In this formula:

$$K_S = \frac{A \cdot E}{x} \times 10^{-3} \quad \cdots\cdots (\text{Ⅱ-18})$$

K_S : Axial rigidity of the screw shaft (N/μm)
A : Cross section area of the screw shaft (mm^2)

$$A = \frac{\pi}{4} dr^2$$

dr : Screw shaft root diameter (mm)
E : Elastic modulus (E = 2.06 x 10^{5}MPa)
x : Distance between points of load application (mm)

(b) In case of: Fixed – Fixed support (axial direction)
In this formula:

$$K_S = \frac{A \cdot E \cdot L}{x\,(L-x)} \times 10^{-3} \quad \cdots\cdots (\text{Ⅱ-19})$$

K_S : Axial rigidity of the screw shaft (N/μm)
L : Unsupported length (mm)
x : Axial deformation is maximum at position x = L/2.
Axial rigidity of the screw shaft can be obtained by the following formula.

$$K_S = \frac{4A \cdot E}{L} \times 10^{-3} \quad \cdots\cdots (\text{Ⅱ-20})$$

[Example of calculation-1]
Obtain axial rigidity of the screw shaft under the condition in Fig. Ⅱ-6•6.

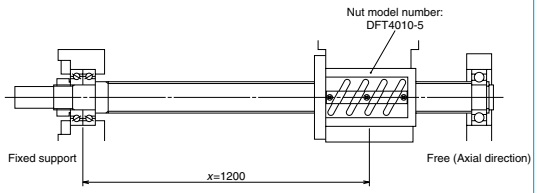

Fixed support -- Free (axial direction)
Fig. Ⅱ-6•6 Supporting conditions "(a)" to calculate axial rigidity of the screw shaft

* Use conditions
Nut model: DFT 4010-5
From Fig. Ⅱ-6•6: Supporting condition -
Fixed support --Free (axial direction)
Distance between points of load application
x=1200 mm
From the dimension table: Screw shaft root diameter
dr=34.4 mm

* Calculation
By Formula Ⅱ-18

$$A = \frac{\pi}{4} dr^2 = \frac{3.14}{4} \times 34.4^2 = 929.4 \text{ (mm}^2\text{)}$$

$$K_S = \frac{A \cdot E}{x} \times 10^{-3} = \frac{929.4 \times 2.06 \times 10^5}{1200} \times 10^{-3} = 159 \text{ (N/}\mu\text{m)}$$

Result
Axial rigidity of the screw shaft K_S=159 N/μm

[Example of calculation-2]
Obtain axial rigidity of the screw shaft under the conditions in Fig. Ⅱ-6•7.

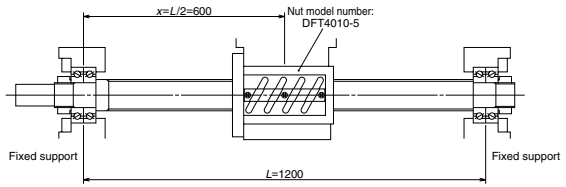

Fixed - Fixed support
Fig. Ⅱ-6•7 Supporting conditions "(b)" to calculate axial rigidity of the screw shaft

* Use conditions: Nut model: DFT 4010-5
From Fig. Ⅱ-6•7: Supporting condition:
Fixed - Fixed support (axial direction)
L=1200 mm
Distance between points of load application:
From the dimension table: Screw shaft root diameter
dr=34.4 mm

* Calculation
By Formula Ⅱ-20

$$A = \frac{\pi}{4} dr^2 = \frac{3.14}{4} \times 34.4^2 = 929.4 \text{ (mm}^2\text{)}$$

$$K_S = \frac{4A \cdot E}{L} \times 10^{-3} = \frac{4 \times 929.4 \times 2.06 \times 10^5}{1200} \times 10^{-3} = 638 \text{ (N/}\mu\text{m)}$$

* Result
Axial rigidity of the screw shaft K_S=638 N/μm

www.bergab.ru Берг АБ bergab@ya.ru Тел. (495)-228-06-21, факс (495) 223-3071

www.bergab.ru Берг АБ bergab@ya.ru Тел. (495)-228-06-21, факс (495) 223-3071

③ Axial rigidity of the ball nut : K_N

(a) Rigidity of the nut with axial play

The following formula shows the relationship between axial load "*Fa*" and the volume of elastic deformation "δa."

$$\delta a = \frac{0.22C}{\sin\alpha}\left[\frac{Q^2}{D_W}\right]^{1/3} \times \xi\,(\mu m) \cdots\cdots\cdots (\text{II-21})$$

In this formula:

δa : Axial deformation of the ball nut

C : Invariable number determined by material, shape and size (ref: medium size precision ball screw C ≒ 2.4)

α : Contact angle (degree) of balls and grooves

D_W: Ball diameter (mm)

Q : Load per ball (N)

$Q = F_a/Z \cdot \sin\alpha$

Z : Number of balls

ζ : Factor determined by accuracy and internal structure

Theoretical rigidity value K is shown in the dimension table. K is obtained from the elastic deformation between screw grooves and balls when an axial load which is equivalent to 30% of the basic dynamic load rating C_a is applied. The criterion for calculation of ball nut rigidity is 80% of the value listed in the table taking into consideration of deformation of the ball nut, etc.

Rigidity value K_N is obtained by the following formula when the axial load "F_a" is not 30% of "C_a."

$$K_N = 0.8 \times K\left[\frac{F_a}{0.3C_a}\right]^{1/3} (N/\mu m) \quad \cdots\cdots (\text{II-22})$$

In this formula:

K : Rigidity value in dimension tables (N/μm)

F_a : Axial load (N)

C_a : Basic dynamic load rating (N)

[Example of calculation-1]

Obtain axial rigidity of the nut under the following conditions.

* Use conditions

Nut model: SFT 4010-5

Axial load: F_a=6000 N

From the dimension table: F_a = Rigidity at 0.3C_a K=706 N/μm

* Calculation

By Formula II-22

$$K_N = 0.8 \times K\left[\frac{F_a}{0.3 \cdot C_a}\right]^{1/3} = 0.8 \times 706 \times \left[\frac{6000}{0.3 \times 52000}\right]^{1/3} = 410\ (N/\mu m)$$

* Result

Axial rigidity of the nut : K_N = 410 N/μm

④ Rigidity of preloaded ball nut

Theoretical rigidity K is shown in each dimension table. K is obtained from the elastic deformation of the ball rolling surface and the balls when: a preload which is equivalent to 10% of the basic dynamic load rating C_a (P Preload. 5% for single-nut oversize ball pre-load system) is applied, followed by an axial load. The criterion for calculation of nut rigidity is 80% of the value listed in the table taking into consideration of deformation of the ball nut, etc.

Rigidity K_N is obtained by the following formula when preload "F_{ao}" is not 10% (or 5%) of "C_a".

$$K_N = 0.8 \times K\left[\frac{F_{ao}}{\varepsilon \cdot C_a}\right]^{1/3} (N/\mu m) \cdots\cdots (\text{II-23})$$

In this formula:

K: Rigidity in the dimension tables (N/μm)

Fao: Preload (N)

ε: Basic factor to calculate rigidity (ε = 0.1. Use 0.05 for P Preload)

[Example of calculation-1]

Obtain axial rigidity of the nut under the following conditions.

* Use conditions

Nut model : DFT 4010-5

Preload : F_{ao}=4000 N

From the dimension table: F_{ao} = Rigidity when εC_a: K=1388 N/μm

When D Preload: ε=0.1

* Calculation

By Formula II-23

$$K_N = 0.8 \times K\left[\frac{F_{ao}}{\varepsilon \cdot C_a}\right]^{1/3} = 0.8 \times 1388 \times \left[\frac{4000}{0.1 \times 52000}\right]^{1/3} = 1017\ (N/\mu m)$$

* Result

Axial rigidity of the nut : K_N = 1017 N/μm

(a) The criterion of the pre-load to ball screw

Nut rigidity increases by a larger preload volume. But excessive preload shortens life, and generates heat. Set the maximum preload about at 0.1Ca (0.05 for P Pre-load). Table II-6.1 shows the criteria for preload for different application.

④ Axial rigidity of support bearing: K_B

Rigidity of the combined thrust angular contact ball bearings which is widely used as a support bearing of the ball screw for high-precision equipment can be obtained by the following formula.

$$K_B \fallingdotseq \frac{3F_{ao}}{\delta_{ao}} \ (N/\mu m) \quad \cdots\cdots\cdots (\text{II-24})$$

In this formula:

K_B : Rigidity of the combined thrust angular contact ball bearings (N/μm)

F_{ao} : Preload of the bearings (N)

δ_{ao}: Axial elastic deformation by preload (μm)

$$\delta_{ao} = \frac{0.44}{\sin\alpha}\left[\frac{Q^2}{D_W}\right]^{1/3} (\mu m) \cdots (\text{II-25})$$

$Q = F_{ao}/Z \cdot \sin\alpha$

α : Contact angle

D_W : Ball diameter (mm)

Z : Number of balls

Refer to Page B305 for data regarding thrust angular contact ball bearings which support high-precision ball screws (TAC Series).

⑤ Axial rigidity of the ball nut and bearing mounting section : K_H

We recommend incorporating high rigidity of the mounting sections of ball nut and support bearings into the design at the early stage of designing the machine.

ⓐ **Torsional rigidity of the feed screw system**

Major torsion factors in the rotating system that bring about error in positioning accuracy are.

* Torsional deformation of the screw shaft

* Torsional deformation of the joint section

* Torsional deformation of the motor

The value of the effect of torsional strain to positioning accuracy is smaller than axial deformation. However, check the effect when designing equipment that requires high positioning accuracy.

ⓑ **Suppress thermal error**

It is necessary to minimize the thermal error for ever increasing demand for positioning accuracy.

* Suppress heat

* Forced cooling

* Avoid effect of temperature rise

Refer to "Measures against thermal expansion" on Page B501.

Table II-6•1 Criteria of preload

Ball screw application	Preload (relative to dynamic load rating Ca)
Robots,material handling systems, etc.	Axial play or ~ 0.01Ca
Semiconductor manufacturing systems, etc. That require highly accurate positioning	0.01Ca~0.04Ca
Medium- high-speed machine tools for cutting	0.035Ca~0.075Ca
Low to medium-speed systems that require especially high rigidity	0.07Ca~0.1Ca

www.bergab.ru Берг АБ bergab@ya.ru Тел. (495)-228-06-21, факс (495) 223-3071

www.bergab.ru Берг АБ bergab@ya.ru Тел. (495)-228-06-21, факс (495) 223-3071

B-Ⅱ-7 Friction Torque and Drive Torque

Operations that use ball screw drives require a motor torque which is equivalent to the total of:

* Friction torque, i.e. the friction of the ball screw itself
* Drive torque which is required for operation

B-Ⅱ-7.1 Friction Torque

(1) Starting friction torque (Break away torque)

A large torque is necessary to start ball screw. This is called "starting friction torque" or "brakeaway torque." This torque is 2 to 2.5 times larger than preloaded dynamic (friction) torque which is described below. Starting friction torque quickly diminishes once the ball screw begins to move.

(2) Dynamic preloaded drag torque (preloaded dynamic friction torque)

When the ball screw is moving, two types of torque generate: 1. Dynamic friction torque by preload; 2. Friction torque associated with ball recirculation. JIS B1192 sets standard of dynamic preloaded torque, which is the total of these two torque types. They are defined in Fig. Ⅱ-7•1.

(3) Calculation of basic torque

Basic torque of preloaded ball screw (T_{po}) can be obtained by the following formula.

$$T_{po}=K\frac{F_{ao}\cdot l}{2\pi}\fallingdotseq 0.014F_{ao}\sqrt{dm\cdot l}\,(N\cdot cm) \quad \cdots(\text{II-26})$$

In this formula:

F_{ao} : Preload (N)

l : Lead (cm)

K : Torque coefficient of ball screw

$$K=\frac{0.05}{\sqrt{\tan\beta}}$$

β : Lead angle (deg.)

dm: Ball pitch circle diameter (cm)

Allowable values of torque variation rate relative to basic torque are regulated as shown in Table Ⅱ-7•1.

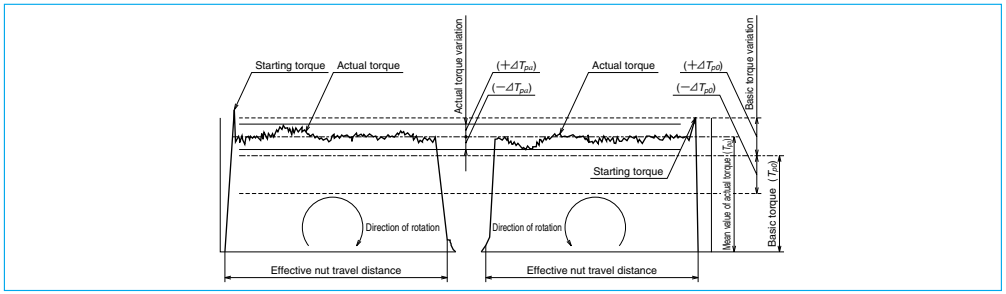

Fig. Ⅱ-7•1 Definitions of dynamic preloaded drag torque

Table Ⅱ-7•1 Range of allowable values of torque variation rates (Source: JIS B 1192)

Basic torque (N・cm)		Effective length of the screw thread (mm)										
		4000 or under								Over 4000 and 10000 or under		
		Slenderness ratio[1]: 40 or less				Slenderness ratio[1]: More than 40 and 60 or less				—		
		Accuracy grade				Accuracy grade				Accuracy grade		
Over	Incl.	C0	C1	C2、3	C5	C0	C1	C2、3	C5	C1	C2、3	C5
20	40	±30%	±35%	±40%	±50%	±40%	±40%	±50%	±60%	—	—	—
40	60	±25%	±30%	±35%	±40%	±35%	±35%	±40%	±45%	—	—	—
60	100	±20%	±25%	±30%	±35%	±30%	±30%	±35%	±40%	—	±40%	±45%
100	250	±15%	±20%	±25%	±30%	±25%	±25%	±30%	±35%	—	±35%	±40%
250	630	±10%	±15%	±20%	±25%	±20%	±20%	±25%	±30%	—	±30%	±35%
630	1000	—	±15%	±15%	±20%	—	—	±20%	±25%	—	±25%	±30%

Remarks 1. Slenderness ratio: The value obtained by dividing the length of the screw thread section of screw shaft (mm) by diameter of the screw shaft (mm).

2. NSK independently sets torque standards which are under 20N・cm.

B-Ⅱ-7.2 Drive Torque

(1) Operating torque of the ball screw

① Normal drive

The torque when converting rotational motion to linear motion (normal operation) is obtained by the following formula.

$$T_a=\frac{F_a\cdot l}{2\pi\cdot\eta_1}\ (N\cdot cm) \quad \cdots\cdots\cdots(\text{II-27})$$

In this formula:

T_a : Normal operation torque (N・cm)

F_a : Axial load (N)

l : Lead (cm)

η_1 : Normal efficiency (η_1=0.9-0.95)

② Back-drive operation

The torque when converting linear motion to rotational motion (back-drive operation) is obtained by the following formula.

$$T_b=\frac{F_a\cdot l\cdot\eta_2}{2\pi}\ (N\cdot cm) \quad \cdots\cdots\cdots(\text{II-28})$$

In this formula:

T_b : Reverse operation torque (N・cm)

η_2 : Reverse efficiency (η_2= 0.9 - 0.95)

③ Dynamic drag torque of the preloaded ball screw

Operation torque of preloaded ball screw can be obtained by Formula Ⅱ-26 (Page B523).

(2) Drive torque of the motor

① Drive torque at constant speed

Torque which is necessary to drive a ball screw at constant speed resisting to external loads can be obtained by the following formula.

$$T_1=(T_a+T_{pmax}+T_u)\times\frac{N_1}{N_2} \quad \cdots\cdots\cdots\cdots(\text{II-29})$$

In this formula:

T_a : Drive torque at constant speed

$$T_a=\frac{F_a\cdot l}{2\pi\cdot\eta_1}\cdots\cdots\cdots\cdots\cdots\cdots\cdots(\text{II-27})$$

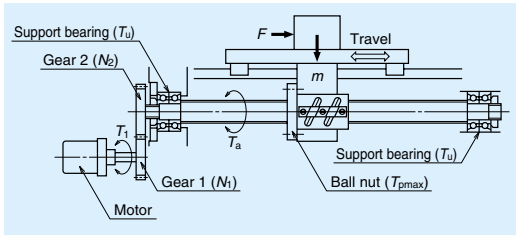

Fig. Ⅱ-7•2 Driving mechanism of ball screw

F_a : Axial load (N)

The value of F_a in Fig. Ⅱ-7•2 is:

$F_a=F+\mu\cdot m\cdot g$

F : Such as cutting force to axial direction (N)

μ : Friction coefficient of the guide way

m : Volume of the traveling section (table mass plus work mass kg)

g : Gravitational acceleration (9.80665m/s^2)

T_{pmax} : Upper limit of the dynamic friction torque of ball screw (N・cm)

T_u : Friction torque of the support bearing (N・cm)

N_1 : Number of teeth in Gear 1

N_2 : Number of teeth in Gear 2

Generally, though it depends on the type of motor, T_1 shall be kept under 30% of the motor rating torque.

② Drive torque at acceleration

Accelerating the ball screw resisting axial load requires maximum torque. Drive torque necessary for this occasion can be obtained by the following formula.

$$T_2=T_1+J\cdot\dot{\omega}\ \cdots\cdots\cdots\cdots\cdots\cdots\cdots\cdots\cdots(\text{II-30})$$

$$J=J_M+J_{G1}+\left[\frac{N_1}{N_2}\right]^2\left[J_{G2}+J_S+m\left[\frac{l}{2\pi}\right]^2\right](kg\cdot m^2)\ \cdots(\text{II-31})$$

In this formula:

T_2 : Maximum drive torque at time of acceleration (N・m)

$\dot{\omega}$: Motor's angular acceleration (rad/s^2)

J : Moment of inertia applied to the motor (kg・m^2)

J_M : Moment of inertia of the motor (kg・m^2)

J_{G1} : Moment of inertia of Gear 1 (kg・m^2)

J_{G2} : Moment of inertia of Gear 2 (kg・m^2)

J_S : Moment of inertia of the screw shaft (kg・m^2)

Check maximum torque of the motor relative to T_2.

※Formula for the moment of inertia of a cylindrical object (ball screw, gear, etc.)

$$J=\frac{\pi\cdot\gamma}{32}D^4\cdot L\ (kg\cdot cm^2)\cdots\cdots\cdots(\text{II-32})$$

In this formula:

γ : Material density (kg/cm^3)

D : Diameter of the cylindrical object (cm)

L : Length of the cylindrical object (cm)

www.bergab.ru Берг АБ bergab@ya.ru Тел. (495)-228-06-21, факс (495) 223-3071

www.bergab.ru Берг АБ bergab@ya.ru Тел. (495)-228-06-21, факс (495) 223-3071

B-Ⅱ-8 Lubrication of Ball Screw

Lithium soap-based grease at viscosity 30~140mm²/s (40℃)is used for grease lubrication. Oil with ISO VG 32~100 is used for oil lubrication.

In general, lubricants with low base oil viscosity are recommended when the ball screw is used for high speed, and it is important to reduce thermal elongation of the screw shaft. On the other hand, lubricants with high base oil viscosity are recommended when the ball screw is used for low speed, high temperature, with vibration, or under high load.

NSK Grease Unit for ball screw lubrication includes:

1) Various types of grease in the bellows-tube which can be instantly attached to the grease pump;

2) Hand grease pump which is compact and easy to use;

3) Nozzles.

Table Ⅱ-8•1 shows NSK greases, and names of other ball screw greases.

Table Ⅱ-8•2 explains checking points in lubrication and standard intervals between replenishments. It is important to wipe off old grease from the screw shaft prior to applying new grease. Page D16 also explains in detail concerning the replenishing methods.

Table Ⅱ-8•1 Grease for ball screw

Product name	Thickener	Base oil	Base oil viscosity mm²/s (40°C)	Range of temperature for use (deg.℃)	Application
NSK Grease AS2	Lithium base	Mineral oil	130	–10～110	General heavy load
NSK Grease PS2	Lithium base	Synthetic oil combined with mineral oil	15	–50～110	Light load
NSK Grease LR3	Lithium base	Synthetic oil	30	–30～130	High-speed medium load
Adlex	Lithium base	Mineral oil	197	～100	Heavy load
NSK Grease NF2	Urea composite type	Synthetic oil combined with mineral oil	27	–40～130	Fretting resistant
NSK Grease EA2	Diurea	Synthetic oil	47	–40～150	For wide-range temperature

※Refer to Page D14 for the nature of NSK greases.

Table Ⅱ-8•2 Checking lubricant and intervals of replenishment

Lubricating method	Checking intervals	Check points	Replenish/replacing interval
Intermittent automatic oil supply	Once a week	Remaining volume, contamination	Supply oil when checking (depending on the tank volume)
Grease	2 ~ 3 months after start of use	Clean, foreign matters	Generally once a year (replenish when necessary)
Oil bath	Every day, when start to work	Oil level	Specify according to oil consumption

B-Ⅱ-9 Dust Prevention for Ball Screw

Use bellows and telescopic pipe (Fig. Ⅱ-9•1) to keep foreign matters from entering into the feed screw system. Install these items so as to shut foreign matters completely from the ball screw.

A seal installed on the nut reinforces the prevention effect. As a rule, a plastic seal (Fig. Ⅱ-9•2) comes with A Series and S Series which are standard series in stock. Small ball screws (diameter of 14 mm and smaller) of R Series (rolled ball screws) come with a plastic seal. The seal for other sizes is "Brush-seal." (Fig. Ⅱ-9•3).

In case of end cap recirculation system for rolled screws (high helix and ultra high helix leads), recirculation components on both ends also serve as a seal. However, the clearance is very large. To provide further dust protection, use the brush-seal which can be installed to the exterior side. Please consult NSK for detail.

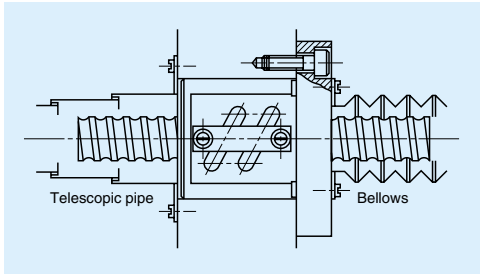

Fig. Ⅱ-9•1 Dust prevention by telescopic pipe and bellows

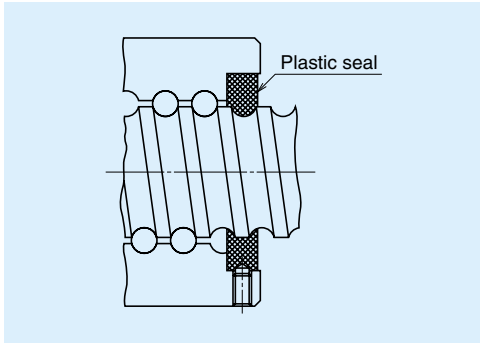

Fig. Ⅱ-9•2 Standard plastic seal

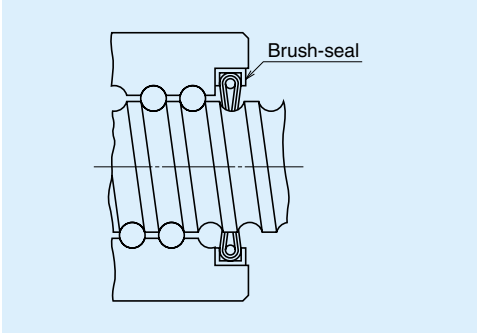

Fig. Ⅱ-9•3 Brush-seal for rolled ball screws

B-Ⅱ-10 Rust Prevention and Surface Treatment of Ball Screws

(1) Stainless steel ball screw

Stainless series KA is standard and available in stock. Please consult NSK if you require custom made stainless steel ball screw.

(2) Surface treatment

Various types of surface treatments for different purpose are available. Please consult NSK.

[Some of the recommended surface treatments]

* Low temperature chrome plating
* Fluoride low temperature chrome plating

Among several surface treatments, low temperature chrome plating is superior because it is easy to furnish and it is effective.

Applicable length ····· 5 m (4 m in case of the fluoride low temperature chrome plating)

* Refer to 1-3 "Rust Prevention and Surface Treatment" (Page D5).

www.bergab.ru Берг АБ bergab@ya.ru Тел. (495)-228-06-21, факс (495) 223-3071

www.bergab.ru Берг АБ bergab@ya.ru Тел. (495)-228-06-21, факс (495) 223-3071

B-Ⅱ-11 Ball Screw Specifications for Special Environment

B-Ⅱ-11.1 Clean Environment

NSK manufactures NSK Clean Grease "LG2 and LGU" for NSK linear guides, ball screws, and Monocarriers which are used under normal temperature and pressure in a clean room.
LG2 and LGU grease are far more superior in stable torque characteristics than the vacuum grease which has been used as a countermeasure against dust generation. LG2 and LGU also have a sufficient durability and dust prevention capability.

(1) Features of "LG2 and LGU"

① Generates less dust than vacuum grease and other general greases. Cleanliness is enhanced by simply switching the grease to LG2 or LGU.
② Has extremely low and stable torque characteristics. It is ideal for high speeds.
③ Unlike vacuum grease, LG2 and LGU have a nature similar to general grease. Its effect is long-lasting, and sufficiently durable. They greatly contribute to minimize the frequency of maintenance.
④ They have an equal capability in rust prevention as general grease, and also is reliable.

When using NSK linear guides, ball screws, or Monocarriers in a clean environment, request LG2 or LGU as a packed lubricant prior to delivery. NSK also makes bellows-tubes which contain 80 grams of LG2 or LGU. The tube is easy to use, and is ideal for maintenance. (Refer to Pages B297 and D20). Wash to remove adipose substances prior to use.
Refer to Page D8 for detailed nature, functions and characteristics of LG2 and LGU.

B-Ⅱ-11.2 Measures for Use under Vacuum

NSK developed MoS_2 / WS_2 spattering and dry-filmed ball screws for equipment to be used in space. NSK also makes soft-metal film (gold and silver) ball screws to be used in a vacuum environment for semiconductor and liquid crystal display processing equipment.
Lubricants widely used for ball screws in a high vacuum are:

* Vacuum grease which uses base oil of low vapor pressure.
* Solid lubricants such as MoS_2, WS_2 used mainly for equipment in space.
* Solid lubricants by soft-metal such as gold, silver, or lead film.

When used for semiconductor and liquid crystal display making equipment, the oil of the vacuum grease evaporates and causes environmental contamination. Also, it hinders creation of a super high vacuum. MoS_2 in the state of solid lubricant generates a large volume of dust, and Mo is unsuitable for semiconductors and reformed surface. Therefore, it is not suitable for the processing machines for semiconductor and liquid crystal display.
NSK recommends solid lubricant ball screws with a long life. These ball screws are treated with special silver film by NSK's unique processing technology, and can be used in a super-high vacuum. However, because of a solid lubricant, the film may peal off and stick to surface of ball grooves repeatedly, causing the torque to rise momentarily on some occasions. The drive motor should be of large capacity to handle this drastic variation of torque.
Refer to Page D7 for test data of ball screws for vacuum.
For ball screw specifications for special environment, refer to Page D2.

www.bergab.ru Берг АБ bergab@ya.ru Тел. (495)-228-06-21, факс (495) 223-3071

www.bergab.ru Берг АБ bergab@ya.ru Тел. (495)-228-06-21, факс (495) 223-3071

B-Ⅱ-12 Noise and Vibration

B-Ⅱ-12.1 Consideration to Lowering Noise

As the machine operates at higher speeds, noise levels tend to increase. Covering the nut section is insufficient to lower noise. NSK has abundant data (NSK Motion & Control Technical Journal No.4, etc.), and offers advice to users regarding selecting ball screw.

To lower noise level in general, the following points should be taken into consideration.

① If the travel speed is the same, use as a large lead as possible to reduce rotational speed.

② Use a ball screw with smaller outer diameter as possible.

It often requires designing for critical dimensions, mandating special specification. Please consult NSK.

For reference, noise levels by ball screws alone are plotted below. Formula for calculation is also shown below.

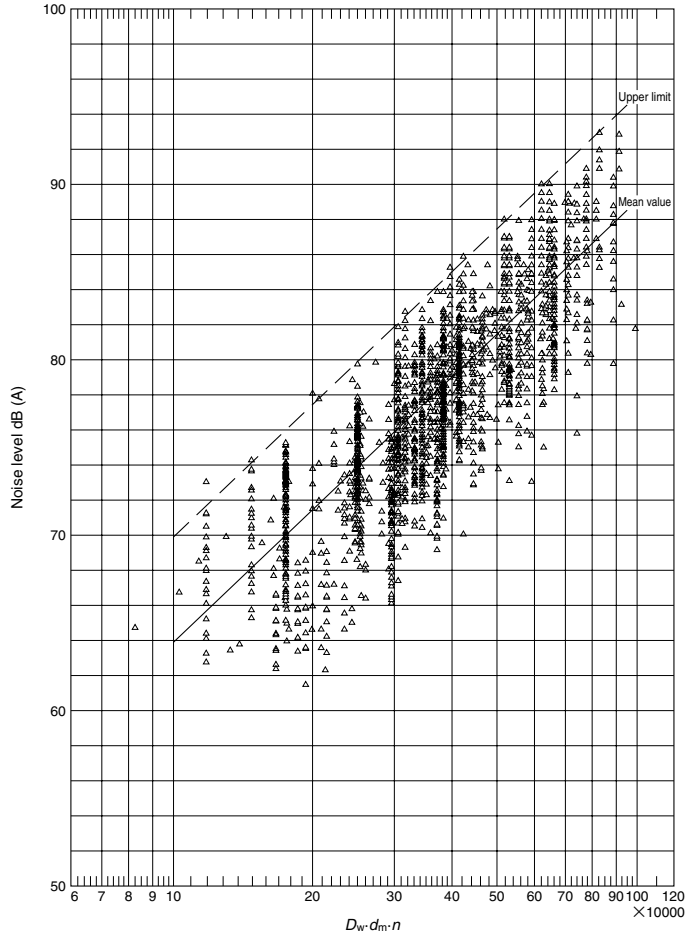

Fig. Ⅱ-12•1 Noise levels of ball screws

Average value at measuring distance of 400 mm ···· dB(A) = 25.2 $\{\log_{10}(D_w \cdot d_m \cdot n \times 10^{-5})\}$ + 63.9 ···· (Ⅱ-33)

Upper limit ···· Average value + 6dB(A)

D_w : Ball diameter (mm)

d_m : Ball pitch circle dia. (mm)

n : Rotational speed (min^{-1})

If measuring distance is 1 m, the average noise level is: Various noise levels minus 8dB(A).

Example of calculation

* Use conditions

Nut model: DFT4010-5

From the dimension table: $D_w = 6.350$

$d_m = 41$

Maximum rotational speed: 2000 min^{-1}

* Calculation

By Formula Ⅱ-33:

dB(A) = 25.2 $\{\log_{10}(D_w \cdot d_m \cdot n \times 10^{-5})\}$ + 63.9 = 25.2 $\{\log_{10}(6.350 \times 41 \times 2000 \times 10^{-5})\}$ + 63.9 = 82dB (A)

* Result

The average value of noise level by ball screws alone at maximum rotational speed (measuring distance 400 mm) is 82dB(A). Upper limit is: 82dB(A) + 6dB(A) = 88dB(A)

* If the measuring distance is 1 m, the average value is 74dB(A), and upper limit is 80dB(A).

When installed, the noise of ball screw becomes higher by the noise of the machine and characteristics of machine vibration.

B-Ⅱ-12.2 Consideration to Ball Screw Support System

Ball screw has low radial rigidity because its support span is longer compare to its shaft diameter. It has only small damping capacity, requiring as much support rigidity as possible through design.

Simplify support bearing system to cut costs invites noise and vibration problems. The necessity to support both shaft ends is increasingly becoming important as the machine is operated at higher speeds.

If one shaft end must be left unfixed without support bearing due to structural reasons, noise and vibration problems may occur. These problems are related to the natural vibration frequency of the screw shaft on the unsecured end. This problem can be averted by installing an impact damper to the shaft end (Fig. Ⅱ-12•2). Please consult NSK.

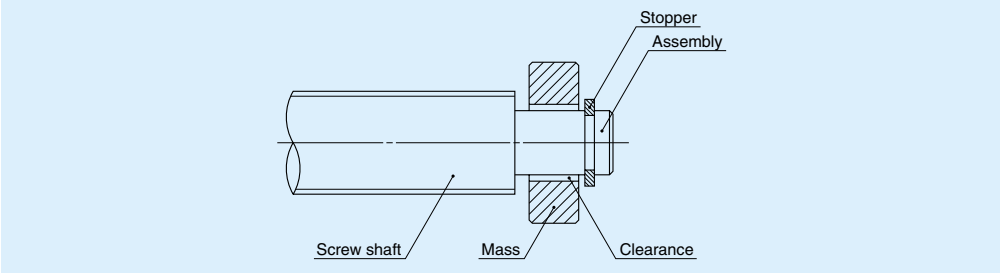

Fig. Ⅱ-12•2 Impact damper (NSK patent)

www.bergab.ru Берг АБ bergab@ya.ru Тел. (495)-228-06-21, факс (495) 223-3071

www.bergab.ru Берг АБ bergab@ya.ru Тел. (495)-228-06-21, факс (495) 223-3071

B-Ⅱ-13 Installation of Ball Screw

B-Ⅱ-13.1 Installation

(1) Centering of the units

Align the centers of housings for the ball nut and the support bearing to which a ball screw is fixed. The centering is critical for life, smooth operation, and positioning accuracy of a ball screw.

We generally recommend the centering accuracy as follows for a precision grade ball screw.

- Inclination of center line: 1/2 000 or less (Target: 1/5 000 or less)
- Eccentricity: 0.020 mm or less

Follow the flowchart in Figure Ⅱ-13•1 for installation procedures.

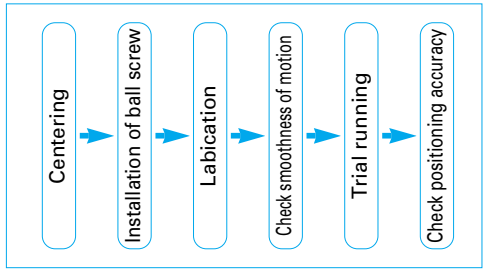

Fig. Ⅱ-13•1 Flowchart of ball screw installation

(2) Centering of ball nut housing

Photo Ⅱ-13•1 shows a centering procedure of the ball nut housing. Insert a jig (test bar) that has close fit clearance to a bore of the ball nut housing. Check vertical and horizontal parallelism of the test bar against the guide way (such as linear guides) with the dial indicator, that is fixed on the guide way bearing, and adjust the position of the housing so that the inclination of the center sets in 1/2 000 or less, and then, fix the housing to the table base.

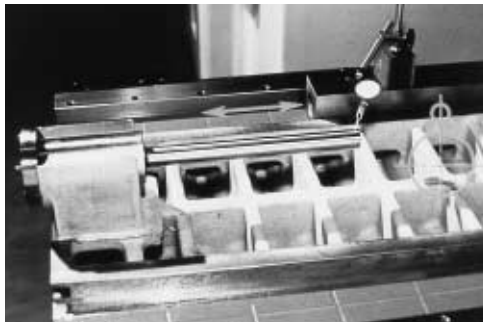

Photo Ⅱ-13•1

(3) Centering of the housing of support bearing

Photo Ⅱ-13•2 shows a centering procedure of the housing of support bearing. As the same way of the ball nut housing, set the jig (test bar) that has close fit clearance to bore of the housing and adjust the position of the housing so that the aligning inclination sets in 1/2 000 or less, then fix the housing to the table temporarily.

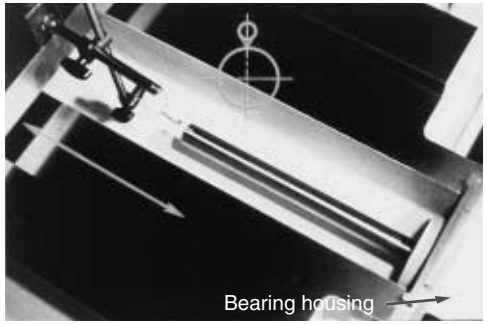

Photo Ⅱ-13•2

(4) Eccentricity of the housings

Measuring way of eccentricity between the two housings is shown in Figure Ⅱ-13•3. Set the table on the guide way (such as linear guides, etc), and fix a dial indicator on it. Check eccentricity of the test bar of support bearing housing against the test bar of ball nut housing. Adjust position of support unit housing so that the eccentricity gets in 0.020 mm or less, then fix the housing of support bearing.

Photo Ⅱ-13•3

(5) Installation of ball nut

Photo Ⅱ-13•4 shows a procedure for installation of the ball nut to the housing. Wipe off outside of the ball nut and bore of the housing with thin rags. (Applying a small amount of machine oil with low viscosity to both parts is effective in rust prevention.) Insert the ball nut to the housing while holding the ball screw in horizontal position and fix it. Do not handle the ball screw roughly, like hammering ends of the ball screw, because it may induce failure of the ball screw.

Photo Ⅱ-13•4

(6) Installation of support bearings in ball screw

Photo Ⅱ-13•5 shows a procedure for installation of support bearings. Select bearings that have appropriate fitting tolerance to the screw shaft, then install them. We recommend using a special sleeve as shown in the photo not to apply impact to the bearings.

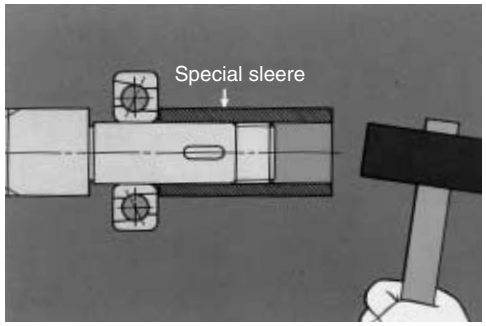

Photo Ⅱ-13•5

www.bergab.ru Берг АБ bergab@ya.ru Тел. (495)-228-06-21, факс (495) 223-3071

www.bergab.ru Берг АБ bergab@ya.ru Тел. (495)-228-06-21, факс (495) 223-3071

(7) Installation of bearings in the housing

Photo Ⅱ-13•6 shows the procedure for installing the support bearings to the bearing housing. When fixing the bearing with a lock nut, tighten the lock nut with specified tightening torque while checking run-out of screw shaft end. Take measures against loose lock nut. (Refer to assembly procedure of support bearing unit. Page B535)

For easy installation work of ball screws, NSK provides Support Unit (Page B273 ~ B294) that consists of bearings and Bearing Lock Nuts (Page B295) of which surface run-out is made to a specification.

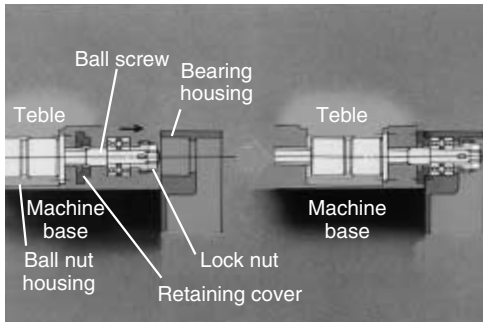

Photo Ⅱ-13•6

(8) Replenish lubrication grease

Photo Ⅱ-13•7 shows the replenishing procedure of lubrication grease. Applying grease prior to its operation is not necessary when the grease is packed into the ball nut. Please confirm it.

If grease is not used, we apply antirust oil to ball screws when shipping. Wipe off the oil and pack grease fully into the ball nut as shown in the photo.

Photo Ⅱ-13•7

(9) Check motion smoothness

Photo Ⅱ-13•8 shows a checking procedure for motion smoothness. This is to confirm if the table is assembled accurately. Use a torque wrench to measure starting torque of the ball screw for full stroke of the table. Check for abnormality in starting torque as well as unevenness of rotation by feeling.

Photo Ⅱ-13•8

(10) Trial operation

Photo Ⅱ-13•9 shows a seen of trail operation. Firstly operate the machine slowly and check noise and vibration, then do the same at medium and high speed. Operate the machine continuously for approximately 2 hours as a running in, and check for abnormality meanwhile. Remove over flown grease from the ball nut after a running in.

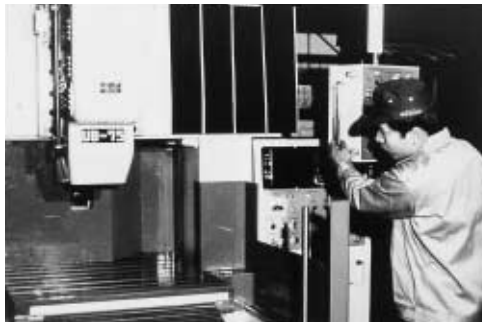

Photo Ⅱ-13•9

B-Ⅱ-13.2 Inserting Ball Nut into Rolled Screw Shaft

When delivered, the nut of rolled ball screw is separated from the screw shaft, and inserted into an arbor shaft.

(1) Consideration to end configuration of screw shaft

The balls may fall out during moving the assembled nut from the arbor to the screw shaft if the sizes and shapes of the arbor and the screw shaft are not appropriate.

If the end of the ball groove can touch the end of the arbor, connect both ends and move the assembled nut from the arbor to the screw shaft (Fig. Ⅱ-13•1).

If the end face of the arbor cannot connect to the end face of the screw because of configuration of both ends of screw shaft, wrap a tape outside of ball screw shaft so that the layers of tape is equal with the outside diameter of the arbor (Fig. Ⅱ-13•3).

If there is a key way or a nick along the way, fill such gaps prior to moving the ball nut.

(2) Installation of arbor

Confirm the correct nut orientation for installation. Remove the stop ring on the side from where the assembled nut is to be removed. Align the centers of the screw shaft and the arbor while pressing firmly the screw shaft end against the arbor.

(3) Moving the nut

Slide the nut until it lightly touches the shoulder of the ball groove section, and stop it. Turn the ball nut to the direction so that it moves to the ball groves, while pressing the arbor to the screw shaft. Do not separate the arbor from the screw shaft until the ball groove end appears completely in the ball nut.

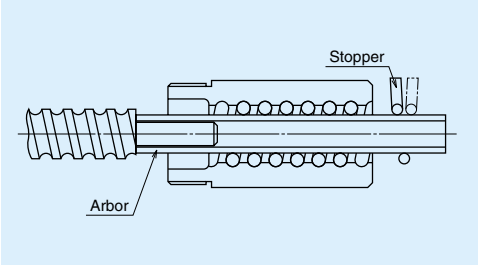

Fig. Ⅱ-13•2 Inserting nut into screwshaft

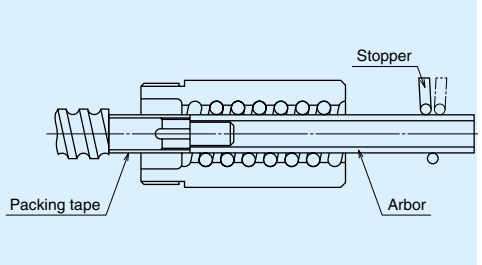

Fig. Ⅱ-13•3 Arbor and shaft end configuration

www.bergab.ru Берг АБ bergab@ya.ru Тел. (495)-228-06-21, факс (495) 223-3071

www.bergab.ru Берг АБ bergab@ya.ru Тел. (495)-228-06-21, факс (495) 223-3071

B-Ⅱ-13.3 Installation of Standard Ball Screw and Support Unit

The illustrations below show typical installation procedures of a standard A Series ball screw and a support unit.

(1) Assembly of support unit

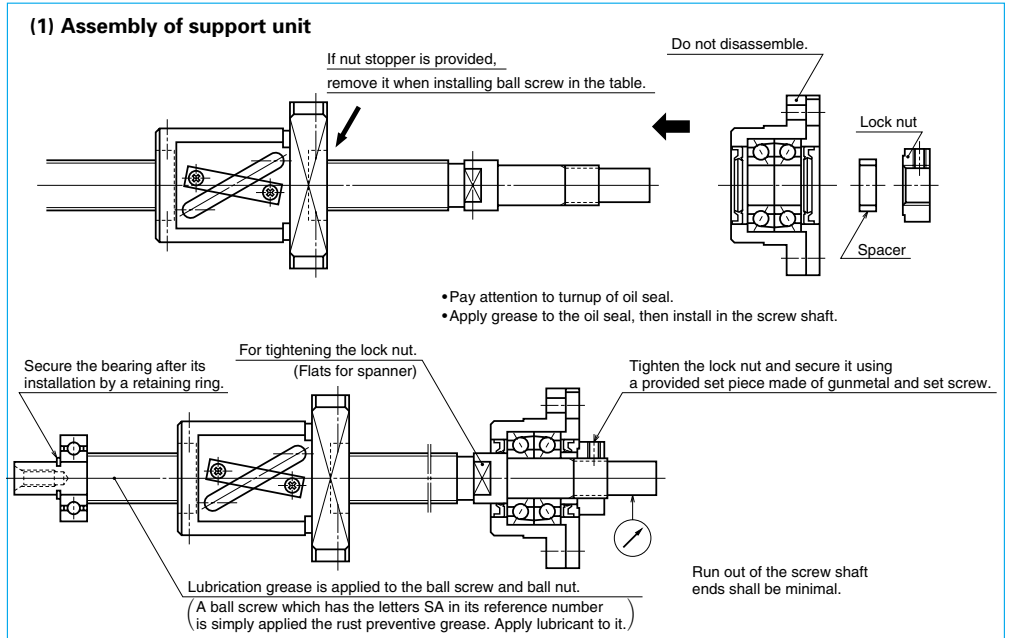

(2) Installation of ball nut to the table

Installation example: Turn the table upside down, and install the ball screw.

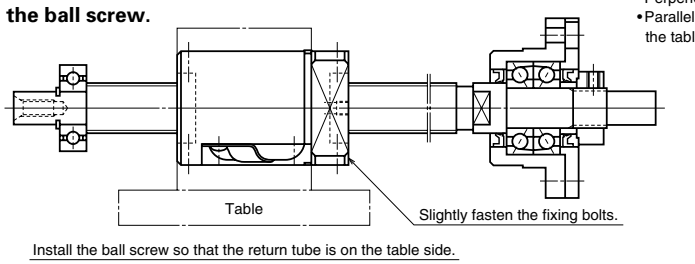

Accuracy of table
- Perpendicularity of nut housing
- Parallelism and center height deviation between the table center and the guide way bearings.

(3) Base, and the support unit installation on the fixed support side

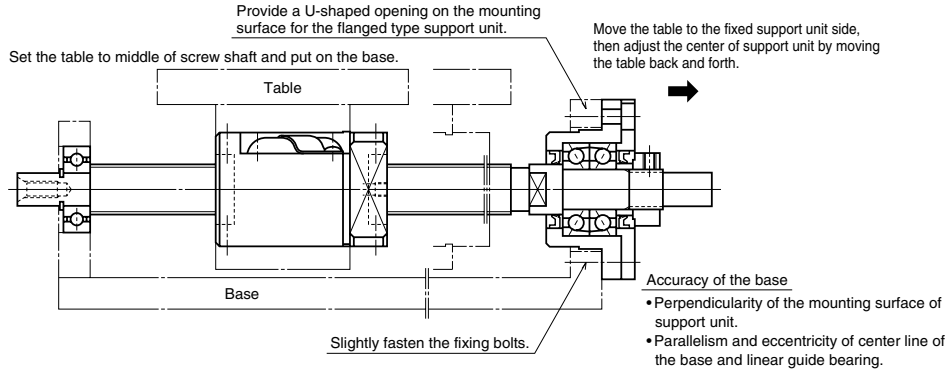

(4) Base and bearing installation on simple support side, and confirming assembling accuracy.

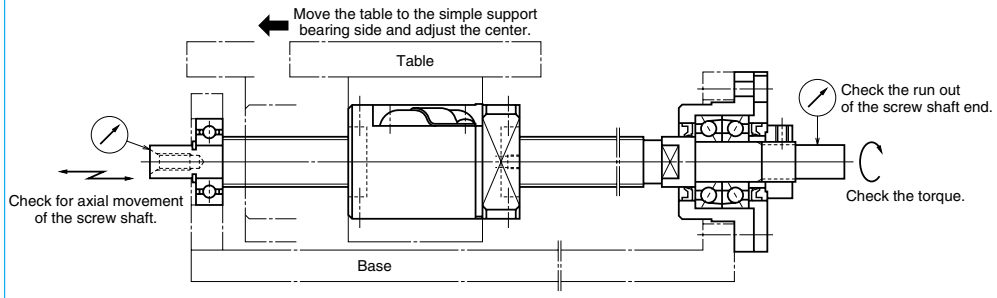

Adjust the center line by moving the table back and forth. Check for smooth operation of the table.
Repeat the same procedures described above if the table is not moving smoothly.
Tighten the fixing bolts checking the assembly accuracy.

(5) Assembly completed.

•Motor bracket / Motor / Coupling

•After the assembly, execute the running-in test entirely.

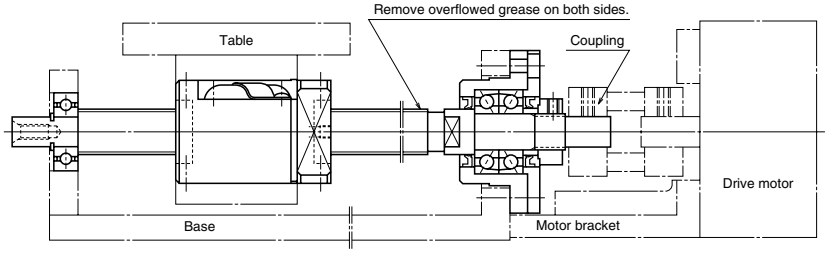

Assembling accuracy of the motor bracket and coupling affects the positioning accuracy of the table.
Pay great attention to it in the same manner as assembling ball screw.

www.bergab.ru Берг АБ bergab@ya.ru Тел. (495)-228-06-21, факс (495) 223-3071

www.bergab.ru Берг АБ bergab@ya.ru Тел. (495)-228-06-21, факс (495) 223-3071

B-Ⅱ-13.4 Shaft End Machining

Shaft end is machined in the following three occasions.

* Precision ball screws in S Series with blank shaft end.
* Rolled ball screws in R Series with blank shaft end.
* Additional machining of a completed ball screw

The following are summaries of machining of these shaft ends. For details, please contact NSK.

(1) Additional machining of S Series ball screw

① Cutting screw shaft

Use a cutting whetstone, etc. to cut the shaft, leaving stock for turning. Keep the nut in the assembled state to the screw shaft, and open only one side of the plastic wrapping bag, expose only the shaft end section to be machined, then cut the screw shaft. This prevents foreign matters from entering to the ball screw section. Do the same for other machining.

② Precautions in cutting shaft end

Outside of the screw shaft is ground with precision. There is a center hole in the ends. Use them for centering. Do not rotate the shaft quickly or stop it suddenly, or the nut might move along the shaft. Securing the nut with tape is a good idea. To machine a very long shaft, apply work rests to the screw shaft surface to suppress vibration (especially caused by critical speed).

③ Turning by lathe

Cut to the length, turn shaft end steps, turn thread screw, and provide the center hole. Refer to JIS B1192 which sets standards for shaft end accuracy.

④ Processing by grinding

Apply the same precautions as for cutting for centering, securing nut, and work rest. Grind sections where the bearings and a "Spann ring" are installed.

⑤ Milling processing

Process key way and lockwasher tooth seat.

⑥ Deburring, washing, rust prevention

Wash with clean white kerosene after processing. Apply lubricant for immediate use. For later use, apply rust preventive agent.

[Note]

Contact NSK if nut is accidentally removed.

(2) Additional machining of R Series rolled ball screw shaft end

① Cutting screw shaft

Carry out the same process as for S Series above.

② Annealing the shaft end (Heat the section of the shaft end to be machined with an acetylene torch. Then gradually cool it in ambient atmosphere.)

* The area not machined loses hardness if exposed to heat. This shortens ball screw life. Cool with water the areas where should not be heated to avoid heat conduction.

③ The following process is the same as S Series above.

B-Ⅱ-14 Precautions for Designing Ball Screw

B-Ⅱ-14.1 Safety System

As shown in the illustration on Page B300, a stopper is installed in some cases to prevent the nut from overrunning due to malfunction of the safety system of the machine itself, or human error during operation.

The travel stopper should be installed at a place where it will not come into contact with the nut when the nut reaches the designed stroke end.

An impact absorbing travel stopper (NSK patent, refer to Page B298) is available at NSK.

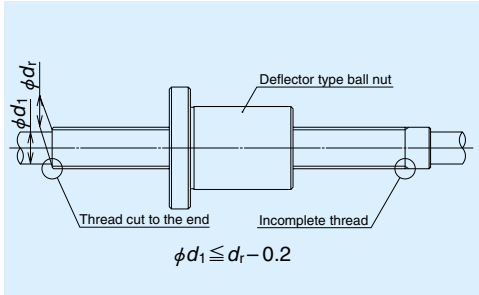

Fig. Ⅱ-14•1 Shaft end of a deflector recirculation system ball screw

B-Ⅱ-14.2 Design Cautious to Assembling Ball Screw

(1) Cutting through the thread screw to the end

For the deflector and end cap ball recirculation system ball screws, one end of the thread screw should be cut through. This is for convenience of assembly for ball nut to the screw shaft (Fig. Ⅱ-14•1). In this case, the shaft end diameter, where this thread cut through is made, should be 0.2 mm or smaller than the ball groove root diameter "d_r" (See the dimension table). A similar precaution is required when it is absolutely necessary to remove the nut from the screw shaft in order to install the ball screw to the machine. Also, in case using the cut-through end as the shoulder of the support bearing, make certain that a sufficient amount of the effective flat surface is left from the root diameter. If it is insufficient, the bearing cannot be installed in perpendicular to the bearing seat. (Fig. Ⅱ-14•2)

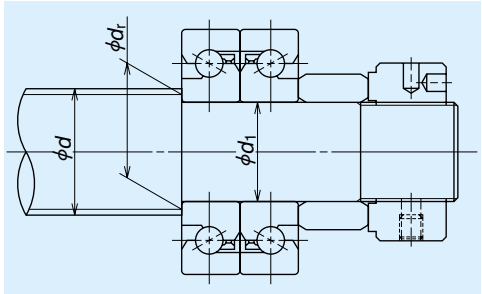

Fig. Ⅱ-14•2 Support bearing and end face (shoulder) for installation

(2) Designing screw shaft end and the nut area

When installing a ball screw to the machine, avoid a design which makes it necessary to separate the nut from the screw shaft as shown in Fig. Ⅱ-14•3. If separated, the balls may fall out. Separation may also deteriorate the ball screw accuracy, or may damage the ball screw. If separating them is unavoidable, please furnish NSK with the component which is to be installed between the nut and screw shaft. NSK will install the component prior to delivery.

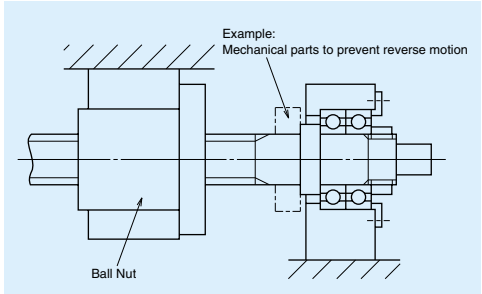

Fig. Ⅱ-14•3 Nut and ball screw are required to be separated when installing in this structure.

(3) Removing nut from the shaft at time of assembly

If it is unavoidable, use an arbor (Fig.Ⅱ-14•4), keeping the balls in the nut. In this case, the outside diameter of the arbor should be approximately 0.2 ~ 0.4 mm smaller than the ball groove root diameter "dr."

www.bergab.ru Берг АБ bergab@ya.ru Тел. (495)-228-06-21, факс (495) 223-3071

www.bergab.ru Берг АБ bergab@ya.ru Тел. (495)-228-06-21, факс (495) 223-3071

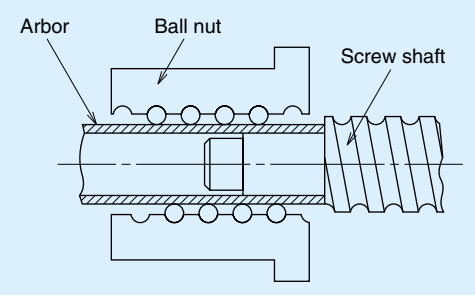

Fig. Ⅱ-14•4 Arbor to install and remove nut

(4) Centering of the ball nut when installing

When installing the nut as shown in Fig. Ⅱ-14•5, provide a space between the housing and the nut body diameter, allowing the centering to be performed.

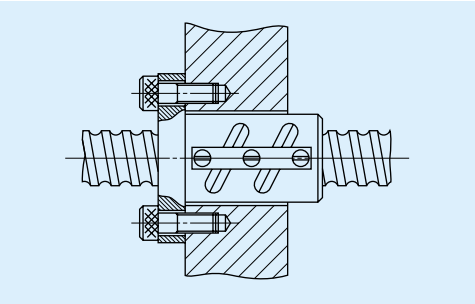

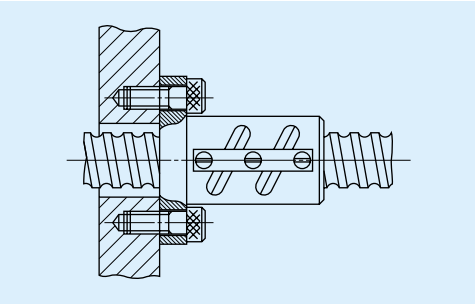

Fig. Ⅱ-14•5 Fixing a ball nut by flange

(5) Preventing the thread screw of nut from loosening

When installing and securing the nut to the housing at the thread screw section, as in the case for RNCT Series rolled ball screw, apply an agent which prevents the nut from loosening.

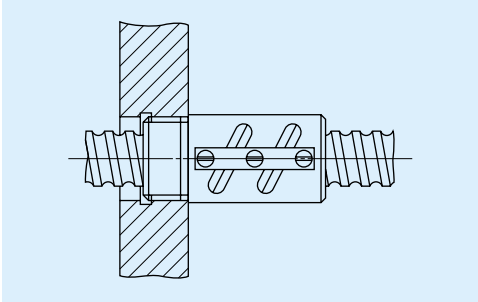

Fig. Ⅱ-14•6 Fixing a ball nut with thread screw

(6) Installation of brush-seal to the nut

If the brush-seal is installed at the thread screw side of the nut which comes with a thread screw, the brush-seal should be designed to be secured as shown in Fig. Ⅱ-14•7.

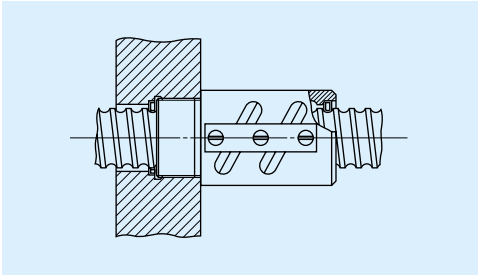

Fig. Ⅱ-14•7 Installation of brush-seal to a ball nut with thread screw

B-Ⅱ-14.3 Effective Stroke of Ball Screw

Rigidity of a ball screw which is hardened by the induction hardening may be slightly low at both ends of the screw section. Consider this low hardness prior to determining the length of effective stroke. Please consult NSK for details.

B-Ⅱ-14.4 Matching after Delivery

Please inform NSK on the position and size if it is necessary to machine the screw shaft end, or if a knock pin at the nut installation section is needed after delivery.

NSK takes a measure and protects designated spots from heat treatment prior to delivery to make subsequent machining easy.

B-Ⅱ-15 Ball Screw Selection Exercise

[Drill 1] High-speed transporting system

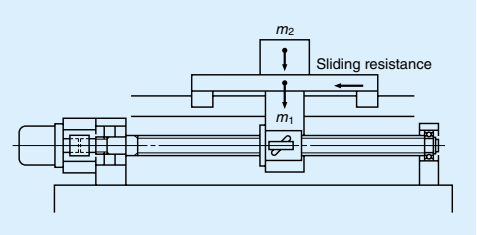

Fig. Ⅱ-15•1

* Design conditions

① Table design specifications

Table mass :	m_1=40kg
Mass of the transporting item :	m_2=20kg
Maximum stroke :	S_{max}=700mm
Rapid traverse speed :	Vmax=1000mm/sec(60m/min)
Positioning accuracy :	±0.05/700mm(0.005 mm/pulse)
Repeatability :	±0.005mm
Required life :	Lt=25000 h(5 years)
Guide way (rolling) :	μ=0.005(friction coefficient)
Drive motor :	AC servo motor (Nmax=3000min^{-1})

② Operating conditions

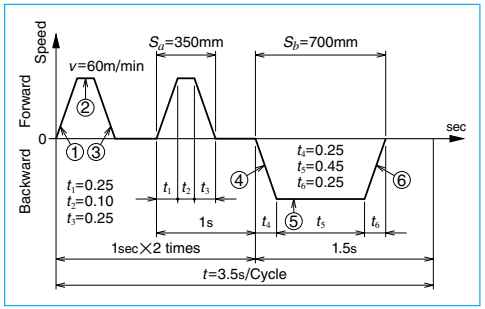

Fig. Ⅱ-15•2

1 Selection of basic factors

(1) Selection of accuracy grade

Accuracy grade should be in the range of C5 to Ct10 according to "Table Ⅰ-4•1 Accuracy grades of ball screw and their application" on Page B17.

From the following conditions in design, the axial play should be 0.005 mm or less.

Repeatability : ±0.005 (mm)

Resolution : 0.005 mm/pulse

From "Table Ⅰ-4•2 Combinations of accuracy grades and axial play" on Page B18, select C5 accuracy grade, and axial play Z code (0 : preloaded).

(2) Selection of lead

From the maximum rotational speed of AC servo motor:

$$l \geqq \frac{V_{max}}{N_{max}} = \frac{1000 \times 60}{3000} = 20(\text{mm})$$

Select a lead of 20 mm or larger.

(3) Selection of screw shaft diameter

According to "Table Ⅰ-4•5 Standard stock ball screw: Combinations of screw shaft diameter and leads" on Page B19, the diameter of the shaft which has a lead larger than 20 mm should be in the range of 15 mm to 32 mm. Select the smallest 15 mm.

(4) Selection of stroke

From "Table Ⅰ-4•6 Maximum stroke of standard ball screw A&S Series" on Page B20, the shaft diameter 15 mm and lead 22 mm satisfy maximum stroke 700 mm.

Primary selection:

Shaft diameter :	15 mm
Lead :	22 mm
Stroke :	700 mm
Accuracy grade :	C5
Axial play :	Z

www.bergab.ru Берг АБ bergab@ya.ru Тел. (495)-228-06-21, факс (495) 223-3071

www.bergab.ru Берг АБ bergab@ya.ru Тел. (495)-228-06-21, факс (495) 223-3071

2 Find out if the required item is in standard stock
In consideration of delivery time and price, select from the standard A Series (finished shaft end).

Primary candidate: W1507FA-3PG-C5Z20

3 Checking basic safety
(1) Checking allowable axial load
① Calculation of allowable axial load (See Fig. Ⅱ-15•2.)
Acceleration at accelerating/decelerating is:

$$\alpha_1=\frac{V_{max}}{t_1}=\frac{1000}{0.25}=4000\,(mm/s^2)=4\,(m/s^2)$$

(At time of acceleration ①, ④)

$$F_1=\mu(m_1+m_2)\times g+(m_1+m_2)\times\alpha 1$$
$$=0.01\times(40+20)\times 9.80665+(40+20)\times 4=246(N)$$

(At time of constant speed ②, ⑤)

$$F_2=\mu(m_1+m_2)\times g=0.01\times(40+20)\times 9.80665=6(N)$$

(At time of deceleration ③, ⑥)

$$F_3=-\mu(m_1+m_2)\times g+(m_1+m_2)\times\alpha_1=234(N)$$

② Buckling load
Calculate using the dimension table on Page B71. Bearing structure is a common Fixed -- Simple support type.
From Formula (Ⅱ-2) on Page B505:

$$dr\geqq\left[\frac{P\cdot L^2}{m}\times 10^{-4}\right]^{1/4}=\left[\frac{246\times 804^2}{19.9}\times 10^{-4}\right]^{1/4}$$
$$=5.3(mm)$$

Dimension table does not list dr. But "Dimensions and Model Numbers of Ball Nut" on Page B401 has a listing of those with the same nut models. According to this table, *dr* is 12.2 mm, and satisfies the requirement.
Result: Acceptable

(2) Checking allowable value of rotational speed
P = 246 (N), L = 804 (mm)
The permissible rotational speed listed in the dimension table is 3000 min^{-1}. Since the motor maximum rotational speed is 3000 min^{-1}, the operation is in the range of permissible rotational speed.
Result: Acceptable

(3) Checking life expectation (See Fig. Ⅱ-15•2.)
(At time of acceleration ①, ④)
From calculation of axial load:

$F_1=246(N)$

$$N_1=\frac{n}{2}=\frac{3000}{2}=1500\,(min^{-1})$$

$t_a=2\times t_1+t_4=0.75(s)$

(At time of constant speed ②, ⑤)

$F_2=6(N)$

$N_2=3000(min^{-1})$

$t_b=2\times t_2+t_5=0.65(s)$

(At time of deceleration ③, ⑥)

$F_3=234(N)$

$N_3=1500(min^{-1})$

$t_c=2\times t_3+t_6=0.75(s)$

Table Ⅱ-15•1

Operating condition	Axial load (N)	Rotational speed (mean) (min^{-1})	Operating time (s)
① ④	$F_1=246$	$N_1=1500$	$t_a=0.75$
② ⑤	$F_2=6$	$N_2=3000$	$t_b=0.65$
③ ⑥	$F_3=234$	$N_3=1500$	$t_c=0.75$

① Mean load F_m, mean rotational speed N_m
From Formulas (Ⅱ-11) and (Ⅱ-12) on Page B515:

$$F_m=\left[\frac{F_1^3\cdot N_1\cdot t_a+F_2^3\cdot N_2\cdot t_b+F_3^3\cdot N_3\cdot t_c}{N_1\cdot t_a+N_2\cdot t_b+N_3\cdot t_c}\right]^{1/3}$$
$$=195(N)$$

$$N_m=\frac{N_1\cdot t_a+N_2\cdot t_b+N_3\cdot t_c}{t}$$
$$=1200(min^{-1})$$

② Calculation of life expectation
From Formulas (Ⅱ-8) and (Ⅱ-9) on Page B515:
(T axial play C_a = 5070N)

$$L_t=\left[\frac{C_a}{F_m\cdot f_w}\right]^3\times\frac{1}{60N_m}\times 10^6$$
$$=\left[\frac{3870}{195\times 1.2}\right]^3\times\frac{1}{60\times 1200}\times 10^6$$
$$\fallingdotseq 62800\geqq 25000\ (h)$$

Result: Acceptable

4 Check whether the following figures meet requirements
(1) Checking accuracy and axial play
Positioning accuracy

From the dimension table and the permissible value of lead accuracy on Page B500:
According to Table Ⅱ-1•2:
Accuracy grade: C5

$e_p=\pm 0.035/800(mm)$

$\upsilon_u=0.025(mm)$

This grade satisfies the required function.
Checking axial play is omitted here since it is explained in "1 Selection of basic factors."

(2) Checking drive torque
Required specifications
Motor rotational sped : 3000 min^{-1}
Time to reach maximum speed : Under 0.25 sec

① Load (converted to motor axis)
From Formulas (Ⅱ-31) and (Ⅱ-32) on Page B524:
Screw shaft

$$J_B=\frac{\pi\cdot\gamma}{32}D^4\cdot L=\frac{\pi\times 7.8\times 10^{-3}}{32}\times 1.5^4\times 80$$

Moving part

$$J_w=m\times\left[\frac{l}{2\pi}\right]^2=60\times\left[\frac{2}{2\pi}\right]^2$$
$$=6.1(kg\cdot cm^2)$$

Coupling
J_c = 0.25 (kg. cm^2) -- Temporary
Total

$J_L=6.7(kg\cdot cm^2)\rightarrow\ 6.7\times 10^{-4}(kg\cdot m^2)$

② Driving torque
From Formulas (Ⅱ-27) and (Ⅱ-29) on Page B524:
At time of constant speed

$$T_1=\frac{F_2\cdot l}{2\pi\cdot\eta_1}+T_{pmax}+T_U=\frac{6\times 2}{2\pi\times 0.9}+7.8+2.1$$
$$=12(N\cdot cm)\ \rightarrow\ 0.12(N\cdot m)$$

Use WBK12-01, a light load support unit for small equipment T_u : Refer to Page B279.
At time of acceleration:

$$T_2=T_1+J\cdot\frac{2\pi\cdot n}{60t_1}=T_1+\frac{(J_L+J_M)\cdot\pi\cdot n}{30t_1}$$
$$=0.12+\frac{(6.7\times 10^{-4}+3.1\times 10^{-4})\times\pi\times 3000}{30\times 0.25}$$
$$=1.35(N\cdot m)$$

* Assuming that J_M of the motor is: J_M = 3.1(kg・cm^2) = 3.1 x 10^{-4} (kg・m^2).
At time of deceleration

$$T_3=T_1-J\cdot\frac{2\pi\cdot n}{60t_3}=T_1+\frac{(J_L+J_M)\cdot\pi\cdot n}{30t_3}$$
$$=0.12-\frac{(6.7\times 10^{-4}+3.1\times 10^{-4})\times\pi\times 3000}{30\times 0.25}$$
$$=-1.11(N\cdot m)$$

③ Selection of motor
[Selection conditions]
Maximum rotational speed: $N_M\geqq 3000(min^{-1})$
Motor rating torque: $T_M\geqq T_{rms}(N\cdot m)$
(T_{rms}: Effective torque)
Motor's rotor inertia -- $J_M > J_L/3$ or more, select an AC servo motor with the following specifications.

Motor specifications:
Rating power output: $W_M=300(W)$
Maximum rotational speed:
$N_M=3000(min^{-1})$
Rating torque: $T_M=1(N\cdot m)=1\times 10^2(N\cdot cm)$
Rotor inertia: $J_M=3.1\times 10^{-4}(kg\cdot m^2)=3.1(kg\cdot cm^2)$

(4) Checking effective torque

$$Trms=\sqrt{\frac{T_2^2\times t_a+T_1^2\times t_b+T_3^2\times t_c}{t}}$$
$$=\sqrt{\frac{1.35^2\times 0.75+0.12^2\times 0.55+1.11^2\times 0.75}{3.5}}$$
$$=0.81\leqq 1(N\cdot m)$$

(5) Checking time to reach maximum speed:

$$t_a=\frac{(J_L+J_M)\times 2\pi\times n}{(T_M-T_1)}\times 1.4$$
$$=\frac{(6.7\times 10^{-4}+3.1\times 10^{-4})\times 2\pi\times 3000}{(2\times 1-0.12)\times 60}\times 1.4$$
$$=0.23\leqq 0.25(sec)$$

In this formula: $T_M=2\times T_M$
From above: Use W1507FA-3PG-C5Z20

B
542

www.bergab.ru Берг АБ bergab@ya.ru Тел. (495)-228-06-21, факс (495) 223-3071

www.bergab.ru Берг АБ bergab@ya.ru Тел. (495)-228-06-21, факс (495) 223-3071

[Drill 2] Processing table for special machines

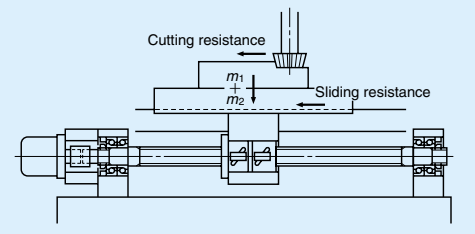

Fig. Ⅱ-15•3

* Design conditions

① Table design specifications

Table mass: m_2=1000kg
Mass of the moving item: m_1=600kg
Maximum stroke: S_{max}=1000mm
Maximum speed: V_{max}=15000mm/min
Positioning accuracy: ±0.035/1000 mm (no load)

※ Attitude accuracy of the table and thermal displacement are not included in the accuracy requirement of the ball screw.

Repeatability: ±0.005 mm (no load)
Lost motion: 0.020mm (no load)
Required life expectancy: L_t=20000 h
(16^{h} x 250^{days} x 10^{years} x $0.5^{rate\ of\ operation}$)
Guide way (sliding) : μ=0.15 (friction coefficient)
Processing: Milling and drilling
Drive motor: AC servo motor (N max=2000min^{-1})

(2) Operating conditions

Table Ⅱ-15•2

Operation	Axial load (N)		Feed speed	Use time
	Cutting resistance	Sliding resistance	(mm/min)	ratio (%)
Rapid traverse	0	2354	15000	30
Light/medium cutting	4000	2354	500	50
Heavy cutting	8000	2354	100	20

※ Sliding resistance: F_r =(1000+600)×0.15×9.80665
=2354(N)

※ Ignore inertia at time of acceleration/deceleration because their time ratios are small.

1 Selection of basic factors

(1) Selection of accuracy grade

Accuracy grade should be in the range from C1 to Ct5 according to "Table Ⅰ-4•1 Precision grades of ball screw and their applications" on Page B17.

Assuming that the screw length Ls is:

L_s = Maximum stroke + nut length + margin
= 1000 = (200) + (100) = 1300

From "Table Ⅱ-1•2 Permissible lead accuracy" on Page B500, the accuracy that satisfies required function is possibly:

Accuracy C3 grade
e_p=±0.029/1600(mm)
υ_u=0.018(mm) Therefore select C3 Grade.

Considering importance on the volume of lost motion, select Z code (axial play 0 and less) for axial play.

(2) Selection of lead

From the maximum rotational speed of AC servo motor:

$$l \geqq \frac{V_{max}}{N_{max}} = \frac{15000}{2000} = 7.5(mm)$$

Larger lead would be beneficial for feed speed. But from the view of the control system (resolution), limit the lead to 8 mm or 10 mm.

(3) Selection of screw shaft diameter

According to "Table Ⅰ-4•5 Standard stock ball screws: Combinations of shaft diameter and lead" on Page B19, shafts whose lead is 8 mm or 10 mm are in the range of 12 mm to 50 mm. Placing more importance on rigidity than to the volume of lost motion, select a relatively large size in the range of 32 mm to 50 mm.

(4) Selection of stroke

Select 1000 mm, the maximum stroke in request.

Primary selection:
Standard ball screw in stock
Shaft diameter: 32, 36, 40, 45, 50 mm
Lead: 8, 10 mm
Stroke: 1000 mm
grade: C3
Axial play code: Z

2 Determining if the required item is in standard stock

Giving consideration to delivery time and price, select from the standard series.

C3 grade chosen in the Primary selection was not found in the standard series. Let us check whether there is a C3 grade among ball screws to order.

3 Finding out whether C3 grade is among the custom made ball screws.

Since C3 grade was the only missing item in step 2, select a custom made ball screw with accuracy grade C3.

Second selection:
Custom made ball screw
Shaft diameter : 32, 36, 40, 45, 50 mm
Lead : 8, 10 mm
Stroke : 1000 mm
Accuracy grade : C3
Axial play : Z

4 Selection of screw shaft diameter, lead, and nut

(1) Checking dynamic load rating

Obtain required load carrying capacity of each lead through load conditions.

Table Ⅱ-15•3

Operating condition	Axial load (N)	Rotations per minute (min^{-1}) l = 8	l = 10	Use time ratio (%)
Rapid traverse	F_1=2354	N_1=1875	N_1=1500	t_1=30
Light/medium cutting	F_2=6354	N_2=62.5	N_2=50	t_2=50
Heavy cutting	F_3=10354	N_3=12.5	N_3=10	t_3=20

Obtain mean load F_m, and mean rotational speed N_m from Formulas (Ⅱ-11) and (Ⅱ-12) on Page B515:

Table Ⅱ-15•4

Lead (mm)	8	10
Mean load F_m (N)	3122	3122
Mean rotational speed N_m (min^{-1})	596	477

Required load carrying capacity is:

From Formulas (Ⅱ-8) and (Ⅱ-9) on Page B515:

$C_a \geqq (60N_m \cdot L_t)^{1/3} \cdot F_m \cdot f_w \times 10^{-2}$(N)

Therefore: L_t =20000(h)
f_w =1.2

Therefore:

l =8(mm) ·····$C_a \geqq$ 33500(N)
l =10(mm) ·····$C_a \geqq$ 31100(N)

(2) Selection of the nut

Assuming that the design requires more importance on rigidity than on lost motion :

* T Type (Tube recirculation system standard ball screw)
* Model: DFT (Pages B335-B344)
* Number of turns of balls : Select from 2.5 turns 2 circuits or 2.5 turns 3 circuits

Table Ⅱ-15•5

Screw shaft diameter (mm)	Dynamic load rating Ca: (N) Lead 8 mm, 2.5 turns 2 circuits	Lead 8 mm, 2.5 turns 3 circuits	Lead 10 mm, 2.5 turns 2 circuits	Lead 10 mm, 2.5 turns 3 circuits
32	31700		46300	
36			49300	
40	34900		52000	
45			54200	76800
50	38700	54900	57700	81800

Third selection: In the range surrounded by the dotted lines in Table Ⅱ-15•5

(3) Checking permissible rotational speed

① Critical speed

Calculate based on rapid traverse speed. Ball screw rotational speed at each lead is:

l=8(mm) ·····1875(min^{-1})
l=10(mm) ···1500(min^{-1})

From Formula (Ⅱ-7) on Page B500:

$$dr \geqq \frac{n \cdot L_2}{f} \times 10^{-7}(mm)$$

In this formula:

L = Maximum stroke + nut length/2 + shaft end extra length
=1000+100+200=1300(mm)
f =21.9 (Fixed -- Fixed)

Therefore:

l=8(mm) ····· $d_r \geqq$ 14.5(mm)
l=10(mm) ····· $d_r \geqq$ 11.6(mm)

② d・n value

From Formula Table Ⅱ-3.1 on Page B512:

$$d \geqq \frac{70000}{n}$$

B
544

www.bergab.ru Берг АБ bergab@ya.ru Тел. (495)-228-06-21, факс (495) 223-3071

www.bergab.ru Берг АБ bergab@ya.ru Тел. (495)-228-06-21, факс (495) 223-3071

Therefore: l =8(mm) ····· $d \leqq$ 37.8(mm)
l =10(mm) ····· $d \leqq$ 46.7(mm)

※ Please consult NSK if it is necessary to use at d・n >70000.

Fourth selection: In the range surrounded by the solid-lines in Table Ⅱ-15•5

(4) Checking rigidity of the ball screw system

Set the lost motion of the ball screw system (screw shaft, nut and support bearing) at 80% of the specified value. Then calculate the system rigidity.

20(μm)×0.8=16(μm)

At this time, the single-direction elastic deformation of the major factors of ball screw system becomes half.

$\Delta L \leqq 8(\mu m)$

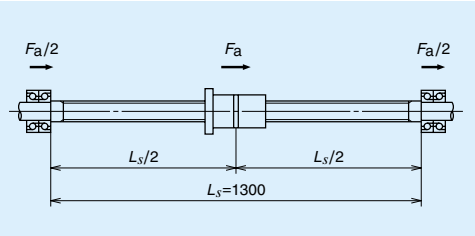

Fig. Ⅱ-15•4

① Rigidity of the screw shaft: Ks (Elastic deformation: ΔLs)

Calculate at the screw shaft center where axial deformation becomes the largest.

From Formula (Ⅱ-20) on Page B519:

$$Ks = \frac{\pi \cdot dr^2 \cdot E}{Ls} \times 10^{-3} \text{ (N/}\mu\text{m)} \quad \text{(Fixed -- Fixed)}$$

$$\Delta Ls = \frac{Fa}{Ks} = \frac{Fa \cdot Ls}{\pi \cdot dr^2 \cdot E} \times 103(\mu m)$$

In this formula:

Fa: Sliding resistance (Fa = 2354N)

Calculation result is shown in Table Ⅱ-15•7

② Rigidity of the nut: K_N (Elastic deformation: ΔL_N)

Set about 1/3 of the maximum axial load as the preload value.

$$F_{a0} = \frac{F_{max}}{3} = \frac{10354}{3} \fallingdotseq 3452 \rightarrow 3500(N)$$

From Formula (Ⅱ-23) on Page B521:

Rigidity at this time:

$$K_N = 0.8 \times K \left[\frac{F_{a0}}{\varepsilon \cdot C_a} \right]^{1/3} = 0.8 \times K \left[\frac{3500}{0.1 C_a} \right]^{1/3} \text{(N/}\mu\text{m)}$$

$$\Delta L_N = \frac{F_a}{K_N}$$

In this formula:

C_a, K: Values listed in the dimension table

F_a: Sliding resistance (Fa = 2354N)

Calculation result is shown in Table Ⅱ-15•7.

③ Rigidity of the support bearing: K_B (Elastic deformation: ΔL_B)

The bearing is thrust angular contact ball bearing for ball screw support (TAC Series). Assume each shaft diameter is as shown in Table Ⅱ-15•6 (Refer to Page B299).

Table Ⅱ-15•6

Screw shaft diameter (mm)	Bearing code
32	25TAC62BDF
36	25TAC62BDF
40	30TAC62BDF
45	35TAC72BDF

Refer to Page B303 for rigidity K_B of each bearing (axial spring modulus).

$$\Delta L_B = \frac{Fa}{2K_B}$$

Calculation result is shown in Table Ⅱ-15•7.

Table Ⅱ-15•7

Unit : N/μm, μm

Nut model number	Screw shaft K_s	Screw shaft ΔL_s	Nut K_N	Nut ΔL_N	Support bearing K_B	Support bearing ΔL_B	Total ΔL
DFT3210-5	347	6.8	839	2.8	1000	1.2	10.8
DFT3610-5	460	5.1	907	2.6			8.9
DFT4010-5	589	4.0	973	2.4	1030	1.1	7.5
DFT4510-5	772	3.0	1050	2.2	1180	1.0	6.2
DFT4510-7.5			1375	1.7			5.7

In consideration of expense, the following is selected.

Nut model code of the selected ball screw:
DFT4010-5
Shaft diameter : 40 mm
Lead : 10 mm

5 Decision of screw shaft length

Screw shaft length

L_s = Maximum stroke + nut length + margin
=1000+193+100=1293 → 1300mm

6 Checking basic safety

(1) Permissible axial load

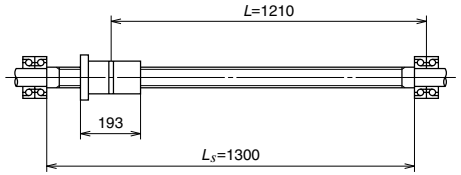

Fig. Ⅱ-15•5

Bucking load

Calculate at: P = 10354(N), L = 1210 (mm)

Bearing supporting condition: Fixed - Fixed support

$$dr \geqq \left[\frac{P \cdot L^2}{m} \times 10^{-4} \right]^{1/4} = \left[\frac{10354 \times 1210^2}{19.9} \times 10^{-4} \right]^{1/4}$$

=16.6(mm)

Result: Acceptable

(2) Checking permissible rotational speed

a) Critical speed

$$n = f \cdot \frac{dr}{L^2} \times 10^7 = 21.9 \times \frac{34.4}{1210^2} \times 10^7$$

$\fallingdotseq 5140 \geqq 1500(\text{min}^{-1})$

b) d・n value

d・n=40×1500=60000≦70000

Result: Acceptable

(3) Checking life

$$L_t = \left[\frac{C_a}{f_w \cdot F_m} \right]^3 \times 10^6 \times \frac{1}{60 \cdot N_m}$$

$\fallingdotseq 95000 \geqq 20000(h)$

Result: Acceptable

7 Check whether the following factors satisfy requirements

(1) Checking accuracy

• Positioning accuracy ±0.035/1000 mm stroke

From "Table Ⅱ-1•2 Tolerance of specified travel and travel variation" on Page B500:

Accuracy grade : C3
e_p= ±0.029/1600(mm)
υ_u= 0.018(mm)

• Measures against thermal expansion

Provide pre-tension force equivalent to the elongation of 3℃ temperature rise, taking in consideration of the load carrying capacity of bearing. Also, adjust the travel compensation for the specified travel by a volume equivalent to 3℃ temperature rise.

① Thermal elongation : ΔL_θ

From Formula (Ⅱ-1) on Page B501:

$$\Delta L_\theta = \rho \cdot \theta \cdot L = 12.0 \times 10^{-6} \times 3 \times 1300 = 0.047(mm)$$

② Pre-tension force : F_θ

$$F_\theta = \Delta L_\theta \cdot Ks = \frac{\Delta L_\theta \cdot E \cdot \pi \cdot dr^2}{4L}$$

$$= \frac{0.047 \times 2.06 \times 10^5 \times \pi \times 34.4^2}{4 \times 1300}$$

$\fallingdotseq 6922 \rightarrow 6900(N)$

Travel compensation :	–0.047/1300(mm)
Pre-tension force :	6900(N)
Tension (elongation) volume :	0.047(mm)

• Selection of support bearing

Assuming that the ratio of basic dynamic load rating of support bearing (Ca) and pre-tension force (F_θ) is ε, select a bearing which generally satisfies:

$\varepsilon = F_\theta / C_B < 0.20$

Design the bearing supporting configuration to which pre-tension force is applied in such way that the axial load is received by the duplex combination or more. Please consult to NSK when one bearing must sustain the pre-tension load.

Table Ⅱ-15•7

Bearing reference number	C_B(N)	ε
30TAC62BDF	29200	0.23
30TAC62BDFD	47500	0.14

Selected support bearing: 30TAC62BDFD

www.bergab.ru Берг АБ bergab@ya.ru Тел. (495)-228-06-21, факс (495) 223-3071

www.bergab.ru Берг АБ bergab@ya.ru Тел. (495)-228-06-21, факс (495) 223-3071

(2) Checking drive torque

Selection of driving motor

《Required specifications》

Motor rotational speed : 1500min^{-1}

Time to reach maximum speed : Under 0.16 sec

(At time of rapid traverse)

① Load (converted to the motor load)

From Formula (Ⅱ-31) and (Ⅱ-32) on Page B524:

Screw shaft

$$J_B = \frac{\pi \cdot \gamma}{32} D^4 \cdot L = \frac{\pi \times 7.8 \times 10^{-3}}{32} \times 4^4 \times 155$$

$$= 30(\text{kg} \cdot \text{cm}^2)$$

Moving part

$$J_w = m \times \left[\frac{l}{2\pi}\right]^2 = 1600 \times \left[\frac{1}{2\pi}\right]^2$$

$$= 40(\text{kg} \cdot \text{cm}^2)$$

Coupling

$J_c = 10(\text{kg} \cdot \text{cm}^2)$ … assumed

Total

$J_L = 80(\text{kg} \cdot \text{cm}^2) \rightarrow 80 \times 10^{-4}(\text{kg} \cdot \text{m}^2)$

② Driving torque

Driving torque at time of constant speed is:

From Formula (Ⅱ-29) on Page B524:

$$T_1 = T_A + T_P + T_U$$

In this formula:

$$T_A = \frac{Fa \cdot l}{2\pi \eta_1}$$

$$T_P = 0.014 F_{a0} \sqrt{dm \cdot l}$$

$$\eta_1 = 0.9$$

Refer to the starting torque value on Page B303:

$$T_U = 33 + 33 = 66 \ (\text{N} \cdot \text{cm})$$

At time of rapid traverse

$$T_{11} = \frac{2354 \times 1}{2\pi \times 0.9} + 0.014 \times 3500 \sqrt{4.1 \times 1} + 66$$

$$= 580(\text{N} \cdot \text{cm}) \rightarrow 580 \times 10^{-2}(\text{N} \cdot \text{m})$$

At time of heavy cutting

$$T_{12} = \frac{10354 \times 1}{2\pi \times 0.9} + 0.014 \times 3500 \sqrt{4.1 \times 1} + 66$$

$$= 1995(\text{N} \cdot \text{cm}) \rightarrow 1995 \times 10^{-2}(\text{N} \cdot \text{m})$$

③ Selection of the motor

《Selection conditions》

Maximum rotational speed : $N_M \geqq 1500(\text{min}^{-1})$

Motor rating torque : $T_M > T_1(\text{N} \cdot \text{m})$

Motor's rotor inertia : $J_M > J_L / 3(\text{kg} \cdot \text{m}^2)$

Based on this, select AC servo motor as below.

Motor specifications		
Rating power output:	W_M	$= 1.8(\text{kW})$
Maximum rotational speed:		
	N_M	$= 1500(\text{min}^{-1})$
Rating torque:	T_M	$= 22.5(\text{N} \cdot \text{m})$
		$= 22.5 \times 10^2(\text{N} \cdot \text{cm})$
Rotor inertia:	J_M	$= 190 \times 10^{-4}(\text{kg} \cdot \text{m}^2)$
		$= 190(\text{kg} \cdot \text{cm}^2)$

④ Checking time to reach maximum speed:

$$t_a = \frac{(J_L + J_M) \times 2\pi \times N}{(T_M' - T_1) \times 60} \times 1.4$$

$$= \frac{(80 \times 10^{-4} + 190 \times 10^{-4}) \times 2\pi \times 1500}{(2 \times 22.5 - 580 \times 10^{-2}) \times 60} \times 1.4$$

$$= 0.15 \leqq 0.16(\text{sec})$$

In the above, $T_M' = 2 \times T_M$

[Drill 3] Cartesian type robot Z axis (vertical axis)

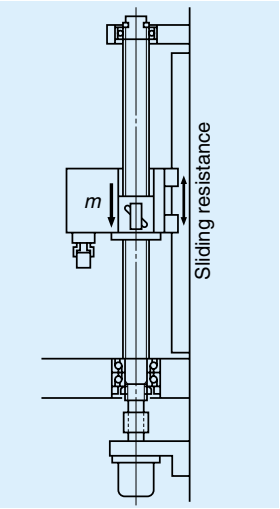

Fig. Ⅱ-15•6

Design conditions

① Design specifications

Mass of the traveling item : $m = 300\text{kg}$

Maximum travel : $S_{max} = 1500\text{mm}$

Rapid traverse speed : $V_{max} = 10000\text{mm/min}$

Repeatability : 0.3mm

Required life : $L_t = 24000\text{h}$ (16 hours x 300 days x 5 years)

Screw shaft supporting condition : Fixed -- Simple support

Nut: Flanged single nut

Guide way (rolling) : $\mu = 0.01$ (friction coefficient)

Drive motor : AC servo motor (Nmax = 1000min^{-1})

Environment : Slightly dusty

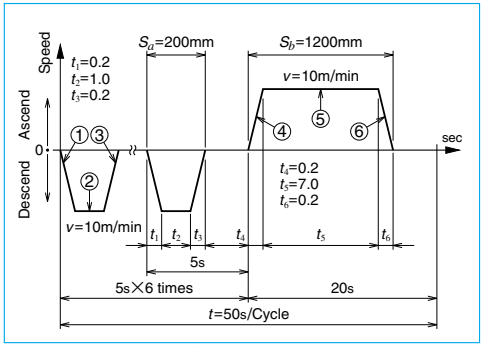

Fig. Ⅱ-15•7

1 Selection of basic factors

(1) Selection of accuracy grade

There is no listing concerning this system in "Table Ⅰ-4•1 Precision grades of ball screw and their applications" on Page B17.

A rolled ball screws in R Series, which is standard in stock, can be a candidate according to "repeatability 0.3 mm" and "Mass of the traveling item 2940 (N)."

(2) Selection of lead

From the maximum rotational speed of AC motor:

$$l \geqq \frac{V_{max}}{N_{max}} = \frac{10000}{1000} = 10(\text{mm})$$

Select a lead 10 mm or over.

(3) Selection of screw shaft diameter

According to "Table Ⅰ-4•8 Rolled ball screw: Combinations of screw shaft diameter and leads" on Page B21, the shaft diameters whose lead is more than 10 mm are in the range of 12 mm to 50 mm.

(4) Selection of stroke

According to "Table Ⅰ-4•10 Maximum stroke range of standard stock rolled ball screws" on Page B22, the shaft diameter which satisfies maximum stroke is between 15 mm and 50 mm.

Primary selection: Rolled ball screw, standard in stock

Screw shaft diameter : 15～50(mm)

Lead : 10(mm)

Stroke : 1500(mm)

www.bergab.ru Берг АБ bergab@ya.ru Тел. (495)-228-06-21, факс (495) 223-3071

www.bergab.ru Берг АБ bergab@ya.ru Тел. (495)-228-06-21, факс (495) 223-3071

2 Find out if the required item is standard stock.
In consideration of delivery time and price, select from the standard R Series (rolled ball screws). Select from Flanged single nuts.

Second selection :	Rolled ball screw, standard in stock
Screw shaft diameter :	15、16、20、25、32 36、40、45、50(mm)
Lead :	10(mm)
Stroke :	1500(mm)

3 Checking basic safety
(1) Checking allowable axial load
① Calculation of allowable axial load (see Fig. Ⅱ-15•7.)
Acceleration at accelerating/decelerating time is:

$$\alpha_1=\frac{V}{60t_1}=\frac{10\times10^3}{60\times0.2}=833(mm/s^2)=0.833(m/s^2)$$

①、⑥ ……$F_1=mg-m\alpha=2690(N)$

②、⑤ ……$F_2=mg=2940(N)$

③、④ ……$F_1=mg+m\alpha=3190(N)$

(2) Bucking load
Use values below.
P = 3190(N), L = 1600 (mm)
Bearing supporting condition is common Fixed -- Simple support.
From Formula (Ⅱ-2) on Page B505:

$$d_r\geqq\left[\frac{P\cdot L^2}{m}\times10^{-4}\right]^{1/4}=\left[\frac{3190\times1600^2}{10.0}\times10^{-4}\right]^{1/4}$$
$$=16.8(mm)$$

(2) Checking permissible rotational speed
① Critical speed
Use values below.
n = 1000 min^{-1}, L = 1600 mm.
From Formula (Ⅱ-7) on Page B509:

$$d_r\geqq\frac{n\cdot L^2}{f}\times10^{-7}=\frac{1000\times1600^2}{15.1}\times10^{-7}$$
$$=17(mm)$$

② d・n value
From Table Ⅱ-3.1 on Page B512:

$$d\leqq\frac{50000}{n}=\frac{50000}{1000}$$
$$=50(mm)$$

* Please consult NSK if d・n >50000 is required.

(3) Decision of screw length

$$L_s=\underbrace{\text{Stroke}+\text{nut length}+\text{margin}}_{\text{Screw section length}}+\text{shaft end length}$$
$$=1500+100+100+200=1900\leqq2000(mm)$$

Normally, Ls/d (screw length/shaft diameter) ≦70 is recommended.

$$d\geqq\frac{L_s}{70}=\frac{1900}{70}=27.1$$

Third selection: Rolled ball screw, standard in stock	
Shaft diameter:	32、36、40、45、50 (mm)
Lead:	10 (mm)
Stroke:	1500 (mm)

(4) Checking life (dynamic load rating)
Determine required load carrying capacity from load conditions.

Table Ⅱ-15•8

Operating condition	Axial load (N)	Rotational speed (mean)(min^{-1})	Use time (s)
① ⑥	F_1=2690	N_1=500	t_a=1.4
② ⑤	F_2=2940	N_2=1000	t_b=13.0
③ ④	F_3=3190	N_3=500	t_c=1.4

Calculate mean load F_m and mean rotational speed N_m from Formulas (Ⅱ-11) and (Ⅱ-12) on Page B515:
Required load carrying capacity is:

$$F_m=\left[\frac{F_1^3\cdot N_1\cdot t_a+F_2^3\cdot N_2\cdot t_b+F_3^3\cdot N_3\cdot t_c}{N_1\cdot t_a+N_2\cdot t_b+N_3\cdot t_c}\right]^{1/3}$$
$$=2940(N)$$

$$N_m=\frac{N_1\cdot t_a+N_2\cdot t_b+N_3\cdot t_c}{t}$$
$$=288(min^{-1})$$

From Formulas (Ⅱ-8) and (Ⅱ-9) on Page B515:

$$C_a\geqq(60N_m\cdot L_t)^{1/3}\cdot F_m\cdot f_w\times10^{-2}(N)$$
$$=(60\times288\times24000)^{1/3}\times2940\times1.2\times10^{-2}$$
$$=26300(N)$$

Checking static load rating

$$C_{0a}=F\max\times f_s=3190\times2$$
$$=6380(N)$$

In consideration of expense:

Fourth selection :	
Rolled ball screw, standard in stock	
Shaft diameter :	32(mm)
Lead :	10(mm)
Stroke :	
Turns of balls and circuit number :	2.5x2
Screw length :	2000(mm)
Basic dynamic load rating :	35700(N)

4 Selection of nut
Select a "standard nut with a flange and a seal (Brush-seals contained inside)" based on the necessity as well as on the environmental conditions.

Selected ball screw:Nut assembly RNFTL3210A5S Screw shaft RS3210A20

B-Ⅱ-16 Reference

"NSK Motion & Control (technical journal)" was compiled to introduce NSK products and its technologies. You will find data summaries which are imperative in selecting ball screws in this catalogue. If you need detailed technical data, other than described in this catalogue, please refer to "NSK Motion & Control" technical journal.
For inquiries and orders, please contact NSK branch offices, sales offices, and representatives assigned at various locations.

Table Ⅱ-16•1 NSK Motion & Control (technical journal) : Issues relating to ball screws (1980-)

No.	Issued Date	Title
No.4	Jun. 1998	Recent Technical Trends in Ball Screws
No.8	May. 2000	Ball Screw with Rotating Nut and Vibration Damper
No.9	Oct. 2000	WFA Standard-Stock Ball Screws
No.10	Apr. 2001	High Performance Seals for Ball Screws
No.11	Oct. 2001	Development of NSK S1 Series Ball Screws and Linear Guides
No.11	Oct. 2001	Low Inertia Series of Nut Rotatable Ball Screws
No.13	Oct. 2002	Development of HTF Series Ball Screws for High Load Drive Application
No.13	Oct. 2002	High Lead Precision Rolled Ball Screws
No.14	May. 2003	High Speed and Low Noise Ball Screws HMC-B02 Series
No.15	Dec. 2003	Clean Support Units for Ball Screws
No.16	Aug. 2004	Development of High Speed and Low Noise Ball Screws
No.18	Aug. 2005	S3 Ball Screws: Super Low Noise Ball Screws for Automation Equipment

www.bergab.ru Берг АБ bergab@ya.ru Тел. (495)-228-06-21, факс (495) 223-3071

www.bergab.ru Берг АБ bergab@ya.ru Тел. (495)-228-06-21, факс (495) 223-3071

www.bergab.ru Берг АБ bergab@ya.ru Тел. (495)-228-06-21, факс (495) 223-3071

rgab.ru Берг АБ bergab@ya.ru Тел. (495)-228-06-21, факс (495) 2

rgab.ru Берг АБ bergab@ya.ru Тел. (495)-228-06-21, факс (495) 2

www.bergab.ru Берг АБ bergab@ya.ru Тел. (495)-228-06-21, факс (495) 223-3071

C-Ⅰ Monocarrier

1. Features ····· C1
2. Classifications and Series ····· C3
3. Optional Components ····· C5
4. Selection of Monocarrier
   4.1. Procedures for Selecting Monocarrier ····· C6
   4.2. Rigidity ····· C6
   4.3. Maximum Rotational Speed ····· C7
   4.4. Accuracy Grade ····· C9
   4.5. Stroke and Ball Screw Lead ····· C9
   4.6. Basic Load Rating ····· C11
   4.7. Estimation of Life Expectancy ····· C13
   4.8. Example of Life Estimation ····· C15
5. Maintenance
   5.1. Maintenance Method ····· C16
   5.2. NSK K1™ Lubrication Unit ····· C17
6. NSK Clean Grease LG2 Specification ····· C18
7. Characteristics and Evaluation Method
   7.1. Positioning Accuracy ····· C18
   7.2. Repeatability ····· C18
8. Sensor Specification
   8.1. Proximity Switch ····· C19
   8.2. Photo Sensor ····· C20

C-Ⅱ MCM Series

1. MCM Series Reference Number Coding ····· C23
2. MCM Series Dimension Table of Standard Products ····· C24
3. MCM Series Option Part ····· C35

C-Ⅲ MCH Series

1. MCH Series Reference Number Coding ····· C59
2. MCH Series Dimension Table of Standard Products ····· C60
3. MCH Series Option Part ····· C67

Monoca rrier

C-1-22
C-24-58
C-60-76

C BLOCK

www.bergab.ru Берг АБ bergab@ya.ru Тел. (495)-228-06-21, факс (495) 223-3071

www.bergab.ru Берг АБ bergab@ya.ru Тел. (495)-228-06-21, факс (495) 223-3071

C-I Monocarrier

C-I-1 Features

Unsurpassed Monocarrier, fruit of technology that has long been accumulated by NSK,
is now available from standard stock.
Light weight, compact single axis linear actuator, integrating the exceptionally reliable NSK's ball screw, linear guide, and support bearing.

1 Light weight, compact design

○Available in two different shapes of cross-section, depending on application.
Light weight type : MCM Series
Rigid type : MCH Series
The design fully utilizing given space facilitates compact structure.

3 Superb antirust capability

○Low temperature chrome plating is a standard feature for the bodies and sliders to control rusting in normal operating and storing environments. Fluoride low temperature chrome plating is optionally available for much higher rust prevention.

4 Long term maintenance free

○Simultaneous use of NSK K1 lubrication unit and grease maintains smooth lubricating performance for long periods in mechanical environments where lubrication is difficult to apply.
○The simultaneous use of a small amount of grease and an NSK K1 lubrication unit provides sufficient lubrication effect in the environment where use of oil is not permitted because of hygienic issues or where the mechanical equipment requires high degree of washing out.
○NSK K1 lubrication unit is available for food processing machines and medical equipment.
○Grease for clean environments and for general machinery is available.

2 All -in-one structure

○The all-in-one structure, integrating a ball screw, a linear guide and support bearings into a unit, significantly reduces workload for design and installation.
○Multiple datum planes, the bottom and a lateral side of the rail, facilitate highly accurate installation.
○Immediate operation right after running-in is possible because grease has been previously packed at the plant.
○Ball screw lead is available in fine to high helix leads from a wide array of the product lineup.

MONOCARRIER®

www.bergab.ru Берг АБ bergab@ya.ru Тел. (495)-228-06-21, факс (495) 223-3071

www.bergab.ru Берг АБ bergab@ya.ru Тел. (495)-228-06-21, факс (495) 223-3071

C-I-2 Classification and Series

Table 1-1

	Light Weight	Beam Rigidity	Moment Rigidity	Accuracy	Long Stroke	Size Variation
MCM Series	◎	○	○	◎	○	◎
MCH Series	○	◎	○	◎	◎	○

【MCM Series Cross-sections】

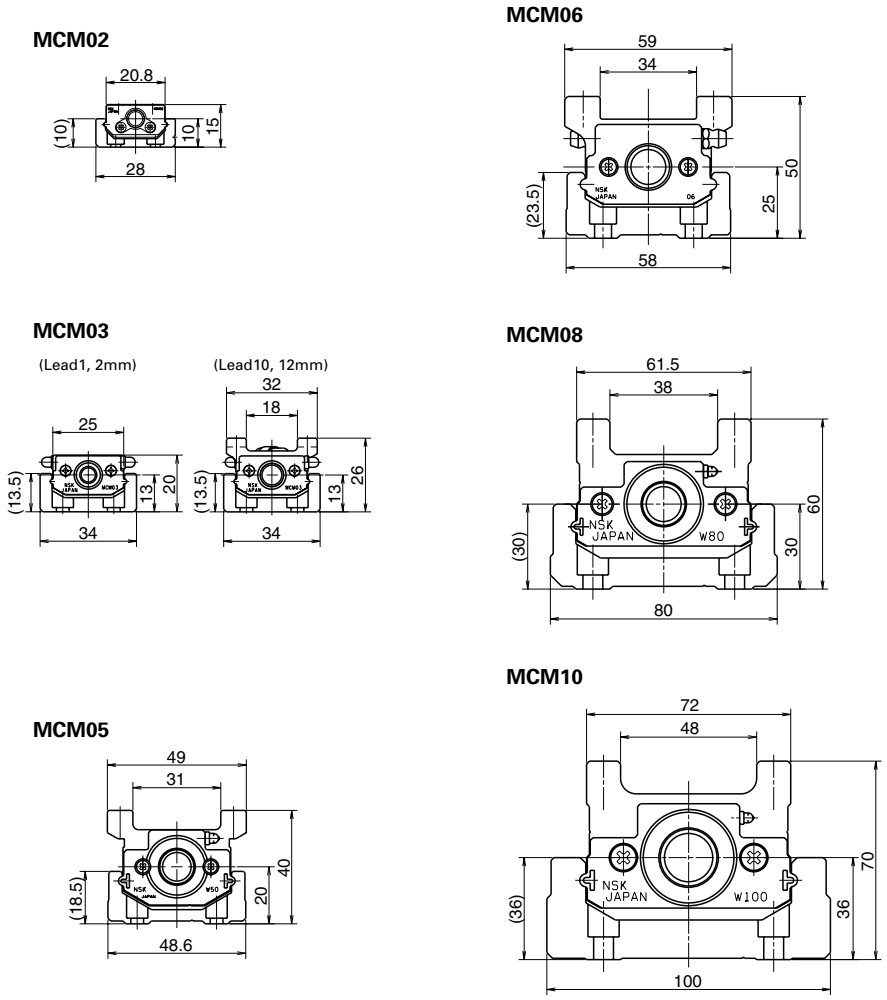

Fig. 1-1

【MCH Series Cross-sections】

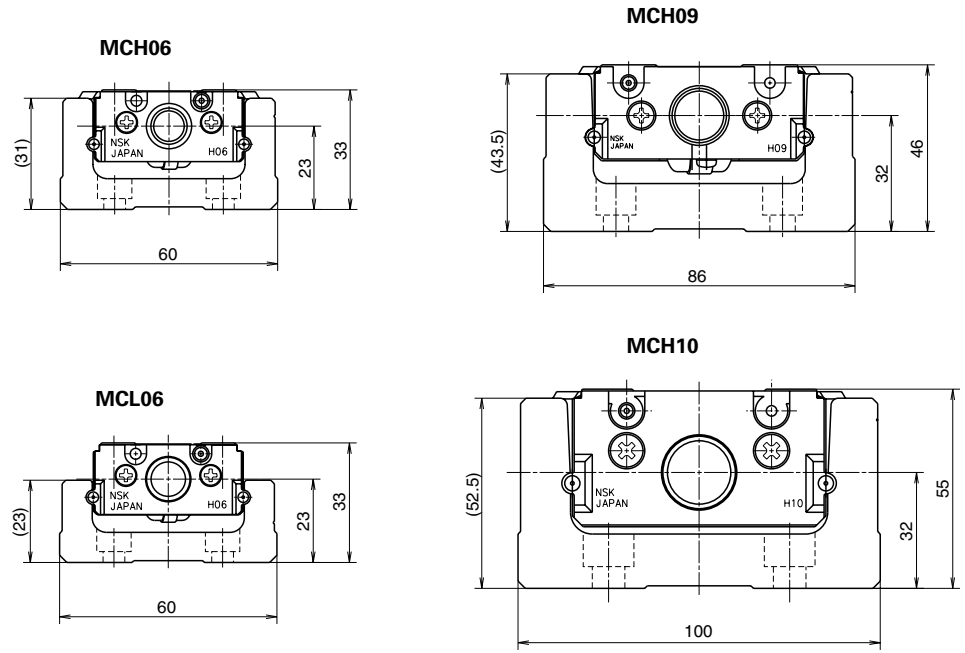

Fig. 1-2

www.bergab.ru Берг АБ bergab@ya.ru Тел. (495)-228-06-21, факс (495) 223-3071

www.bergab.ru Берг АБ bergab@ya.ru Тел. (495)-228-06-21, факс (495) 223-3071

C-I-3 Optional components

MCM Series

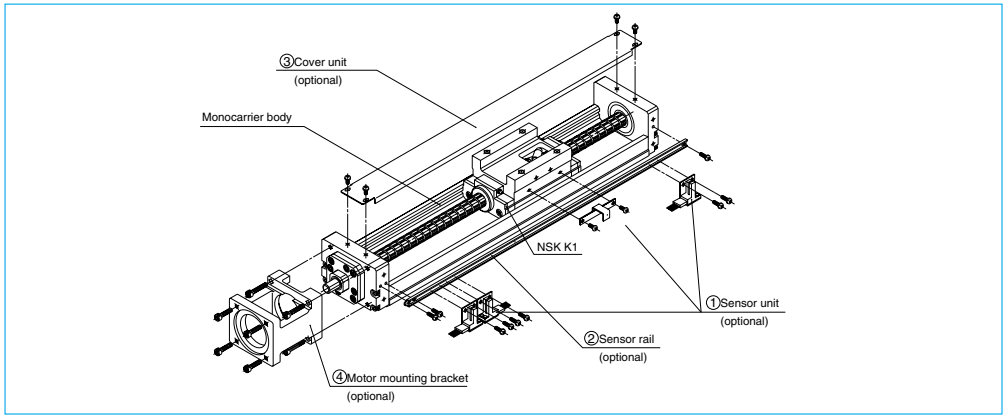

Fig.1-3 Assembly Optional components for MCM10 (example)

① Sensor unit : Sensors, sensor mounting parts and a sensor dog are available in a set.
※ When you used a sensor unit, the full cover unit cannot be used.
② Sensor rail : Rail for sensor mounting is available.
③ Cover unit : Top cover or full cover (included top cover and side cover) is available.
④ Motor bracket for motor mounting : Prepared for each motor maker.
☆ We assemble optional components upon request.

MCH Series

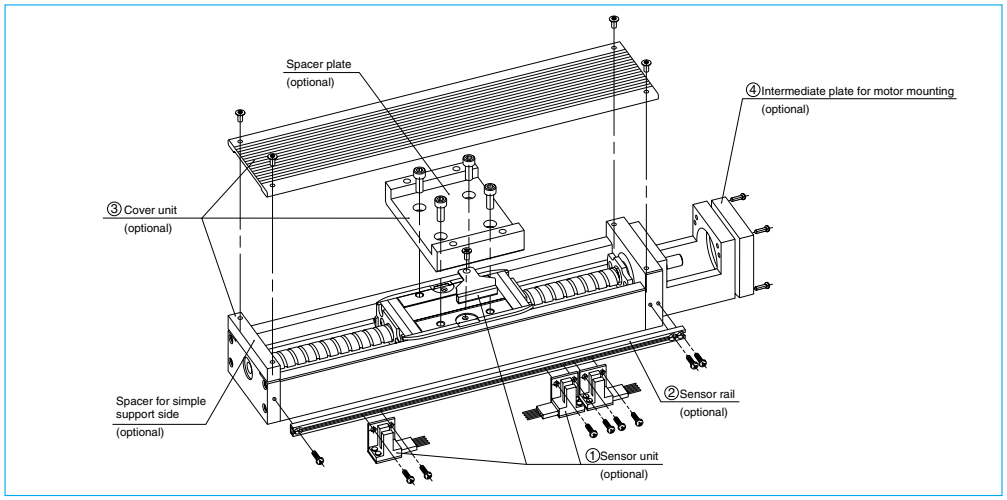

Fig. 1-4 Assembly Optional components for MCH10 (example)

① Sensor unit : Sensors, sensor mounting parts and a sensor dog are available in a set.
② Sensor rail : Rail for sensor mounting is available.
③ Cover unit : Top cover (included spacer plate and spacer for simple support side) is available.
④ Intermediate plate for motor mounting : Prepared for each motor maker.
☆ We assemble optional components upon request.

C-I-4 Selection of Monocarrier

C-I-4. 1 Procedures for selecting Monocarrier

Select a reference type of Monocarrier based on stroke and rigidity (Refer to Fig. 1-6, 1-7).

Select a ball screw lead referring to "1.4.3 Maximum Rotational Speed" so that the rotational speed does not exceed the limit.

Study the loads to be applied to the linear guide and obtain the equivalent load Fe substituting them for equation ① or ② on Page C13. Obtain the mean effective load Fm substituting them for equation ③ on Page C14, then calculate the life.

Study the loads to be applied to the ball screw and support unit. Obtain the mean effective load Fm substituting them for equation ③ on Page C14, then calculate the life.

C-I-4. 2 Rigidity

Rigidity of rail

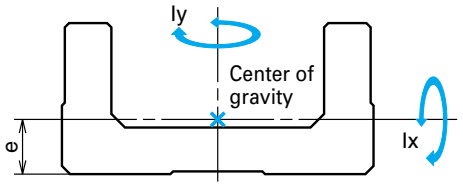

Fig. 1-5

Table 1-2 Rigidity of rail

Nominal size	Geometrical moment of inertia ×10⁴ (mm⁴)		Center of gravity (mm)	Mass (kg/100mm)
	Ix	Iy	e	w
MCM02	0.097	1.32	3.3	0.11
MCM03	0.30	3.3	4.5	0.18
MCM05	0.78	11.4	6.0	0.31
MCM06	2.14	26.1	7.0	0.57
MCM08	5.90	81.0	9.2	0.88
MCM10	15.6	219	12.2	1.52
MCH06	6.5	38.2	10.8	0.67
MCL06	2.58	29.6	7.8	0.56
MCH09	28.7	172	15.5	1.48
MCH10	54.0	307	18	1.93

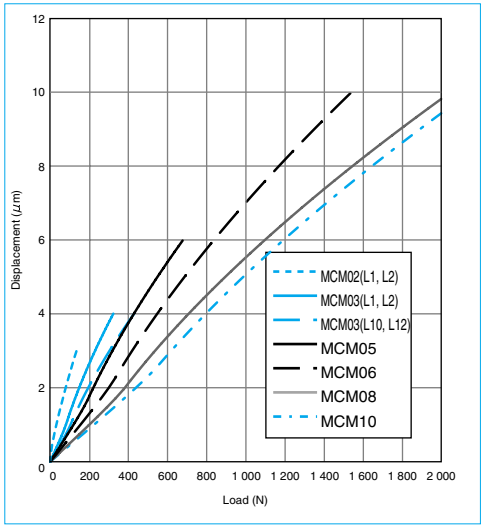

Fig. 1-6 MCM Series Rigidity in radial direction

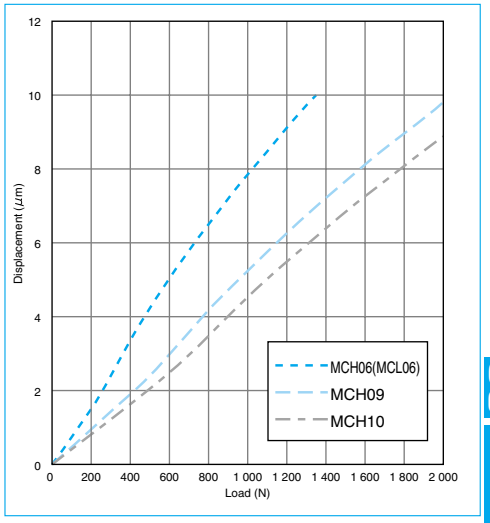

Fig. 1-7 MCH Series Rigidity in radial direction

C 6

www.bergab.ru Берг АБ bergab@ya.ru Тел. (495)-228-06-21, факс (495) 223-3071

www.bergab.ru Берг АБ bergab@ya.ru Тел. (495)-228-06-21, факс (495) 223-3071

C-I-4. 3 Maximum Rotational Speed

● Maximum Rotational Speed of MCM Series

Maximum rotational speed of Monocarrier is determined by the critical speed of ball screw shaft and the d · n value.

Do not exceed the maximum rotational speeds on the table below.

Table 1-3

	Ball screw lead	stroke (mm)	Rail length L_2 (mm)	Maximum rotational speed (mm/s)
MCM02 Single slider	1	50	100	50
		100	150	
		150	200	
	2	50	100	100
		100	150	
		150	200	
MCM03 Single slider	1	50	115	50
		100	190	
		150	240	
	2	50	115	100
		100	190	
		150	240	
	10	100 ~ 250	190 ~ 340	500
	12	100 ~ 250	190 ~ 340	600
MCM05 Single slider	5	50 ~ 200	180 ~ 330	250
	10	50 ~ 600	180 ~ 730	500
	20	300 ~ 600	430 ~ 730	1000
MCM05 Double slider	10	60 ~ 510	280 ~ 730	500
	20	210 ~ 510	430 ~ 730	1000
MCM06 Single slider	5	50 ~ 500	190 ~ 640	250
	10	50 ~ 600	190 ~ 740	500
		700	840	490
		800	940	390
	20	300 ~ 600	440 ~ 740	1000
		700	840	980
		800	940	770
MCM06 Double slider	5	110 ~ 410	340 ~ 640	250
	10	110 ~ 610	340 ~ 840	500
		710	940	490
	20	210 ~ 610	440 ~ 840	1000
		710	940	980

	Ball screw lead	stroke (mm)	Rail length L_2 (mm)	Maximum rotational speed (mm/s)
MCM08 Single slider	5	50 ~ 200	220 ~ 370	250
	10	100 ~ 700	270 ~ 870	500
		800	970	390
	20	300 ~ 700	470 ~ 870	1000
		800	970	780
MCM08 Double slider	10	80 ~ 680	370 ~ 970	500
	20	180 ~ 680	470 ~ 970	1000
MCM10 Single slider	10	200 ~ 800	380 ~ 980	500
		900	1080	440
		1000	1180	360
	20	300 ~ 800	480 ~ 980	1000
		900	1080	880
		1000	1180	720
MCM10 Double slider	10	70 ~ 670	380 ~ 980	500
		870	1180	440
	20	170 ~ 670	480 ~ 980	1000
		870	1180	880

● Maximum Rotational Speed of MCH Series

Maximum rotational speed of Monocarrier is determined by the critical speed of ball screw shaft and the d · n value.

Do not exceed the maximum rotational speeds on the table below.

Table 1-4

	Ball screw lead	stroke (mm)	Rail length L_2 (mm)	Maximum rotational speed (mm/s)
MCH06 MCL06 Single slider	5	50 ~ 500	150 ~ 600	250
	10	50 ~ 500	150 ~ 600	500
	20	50 ~ 500	150 ~ 600	1000
MCH06 Double slider	5	100 ~ 400	300 ~ 600	250
	10	100 ~ 400	300 ~ 600	500
	20	100 ~ 400	300 ~ 600	1000
MCH09 Single slider	5	200 ~ 600	340 ~ 740	250
		800	940	210
	10	200 ~ 600	340 ~ 740	500
		800	940	410
	20	200 ~ 600	340 ~ 740	1000
		800	940	830
MCH09 Double slider	5	150 ~ 650	440 ~ 940	250
	10	150 ~ 650	440 ~ 940	500
	20	150 ~ 650	440 ~ 940	1000

	Ball screw lead	stroke (mm)	Rail length L_2 (mm)	Maximum rotational speed (mm/s)
MCH10 Single slider	10	400 ~ 800	580 ~ 980	500
		900	1080	440
		1000	1180	360
		1100	1280	300
		1200	1380	250
	20	400 ~ 800	580 ~ 980	1000
		900	1080	870
		1000	1180	720
		1100	1280	600
		1200	1380	510
MCH10 Double slider	10	250 ~ 750	580 ~ 1080	500
		850	1180	480
		950	1280	390
		1050	1380	320
	20	250 ~ 750	580 ~ 1080	1000
		850	1180	950
		950	1280	780
		1050	1380	650

www.bergab.ru Берг АБ bergab@ya.ru Тел. (495)-228-06-21, факс (495) 223-3071

www.bergab.ru Берг АБ bergab@ya.ru Тел. (495)-228-06-21, факс (495) 223-3071

C-I-4. 4 Accuracy Grade

The accuracy grade of Monocarrier standard inventories is high grade (H), except for lead 1 and 2 of MCM02, and 03.

When you require strokes longer than 1200 mm, please consult NSK about the accuracy grade.

Table 1-5 (Unit : μm)

Grade	High grade				Precision			
Stroke (mm)	Repeatability	Running Parallelism (vertical)	Backlash		Repeatability	Positioning accuracy	Running Parallelism (vertical)	Backlash
~200	±10	14	20 or less		±3	20	8	3 or less
~400		16				25	10	
~600		20				30	12	
~700		23				30	15	
~1000		23				35	15	
~1200		30				40	20	

C-I-4. 5 Stroke and Ball Screw Lead

(1) MCM Series standard combinations of Stroke and Ball Screw Lead

Table 1-6 Single slider

(●mark : Standard inventory ○mark: Short-term delivery) (Unit : mm)

Nominal size	MCM02		MCM03				MCM05			MCM06			MCM08			MCM10	
stroke \ lead	1	2	1	2	10	12	5	10	20	5	10	20	5	10	20	10	20
50	●	●	●	●	○	○	●	●	○	●	○	○	○	○			
100	●	●	●	●	●	●	●	●	○	●	●	○	○	●	○	○	○
150	●	●	○	○	○	○	○	●	○	○	○	○	○	○	○	○	○
200					●	○	●	●	○	●	●	○	○	●	○	●	○
250					○	○	○	●	○	○	○	○	○	○	○	○	○
300							○	●	●	●	●	●	○	●	●	●	●
400							○	●	●	●	●	●	○	●	●	●	●
500							○	●	●	○	●	●	○	●	●	○	○
600							○	●	●	○	○	○	○	●	○	●	○
700										○	●	●	○	○	○	○	○
800										○	○	○	○	○	○	●	○
900																○	○
1000																○	○

Table 1-7 Double slider

(○mark: Short-term delivery) (Unit : mm)

Nominal size	MCM05		MCM06			MCM08		MCM10	
stroke \ lead	10	20	5	10	20	10	20	10	20
60	○								
70								○	
80						○			
110	○		○	○					
160	○								
170								○	○
180						○	○		
210	○	○	○	○	○				
270								○	○
280						○	○		
310	○	○	○	○	○				
370								○	○
380						○	○		
410	○	○	○	○	○				
470								○	○
480						○	○		
510	○	○		○	○				
570								○	○
580						○	○		
610				○	○				
670								○	○
680						○	○		
710				○	○				
870								○	○

Please consult NSK about double slider of MCM 02 and 03.

(2) MCH Series Standard Combinations of Stroke and Ball Screw Lead

Table 1-8 Single slider

(●mark : Standard inventory ○mark: Short-term delivery) (Unit : mm)

Nominal size	MCH06			MCH09			MCH10	
stroke \ lead	5	10	20	5	10	20	10	20
50	●	●	○					
100	●	●	○	○	○	○	○	○
200	●	●	●	●	●	○	○	○
300	○	●	●	●	●	○	○	○
400	○	●	●	●	●	○	●	●
500	○	●	●	○	●	●	●	●
600				○	●	●	●	●
700				○	○	○	●	●
800				○	●	●	●	●
900							○	●
1000							○	●
1100							○	○
1200							○	○

Table 1-9 Double slider

(○mark: Short-term delivery) (Unit : mm)

Nominal size	MCH06			MCH09			MCH10	
stroke \ lead	5	10	20	5	10	20	10	20
100	○	○						
150				○	○			
200	○	○						
250				○	○		○	○
300	○	○						
350				○	○		○	○
400		○	○					
450					○	○	○	○
550							○	○
650					○	○	○	○
750								○
850								○
950								○
1050								○

Table 1-10 Limitations

	Nominal size	lead (mm)	slider	stroke (mm)
MCM series	MCM02	1,2	Single	150
	MCM03	1,2	Single	150
		10,12	Single	350
	MCM05	5,10,20	Single	900
			Double	810
	MCM06	5,10,20	Single	1000
			Double	910
	MCM08	5,10,20	Single	1000
			Double	880
	MCM10	10,20	Single	1800
			Double	1670
MCH series	MCH06	5,10,20	Single	600
			Double	500
	MCH09	5,10,20	Single	1000
			Double	850
	MCH10	10,20	Single	1800
			Double	1650
	MCL06	5,10,20	Single	500

www.bergab.ru Берг АБ bergab@ya.ru Тел. (495)-228-06-21, факс (495) 223-3071

www.bergab.ru Берг АБ bergab@ya.ru Тел. (495)-228-06-21, факс (495) 223-3071

C-I-4. 6 Basic Load Rating

(1) MCM Series Basic Load Rating

Table 1-11 Basic Load Rating

Nominal size	Lead ℓ (mm)	Shaft dia d (mm)	Basic dynamic load rating (N) Ball screw C_a	Linearguide C	Support unit C_a	Rated running distance L_a (km)	Basic static load rating (N) Ball screw C_{0a}	Linearguide C_0	Support unit Limit load (N)
MCM02	1	ϕ6	340 (High grade) 405 (Precision)	4910	615	1	555 (High grade) 615 (Precision)	2120	490
	2		340 (High grade) 405 (Precision)	3900		2	555 (High grade) 615 (Precision)		
MCM03	1	ϕ6	735	10900	2670	1	1230	4900	1040
	2		735	8650		2			
	10	ϕ8	1230	6250		10	1690	6620	
	12		1230	5880		12			
MCM05	5	ϕ12	3760	15600	4400	5	6310	10900	1450
	10		2260	12400		10	3780		
	20		2260	9850		20	3780		
MCM06	5	ϕ16	7310	25200	6550	5	13500	17000	2730
	10	ϕ15	7060	20000		10	12700		
	20		4560	15900		20	7750		
MCM08	5	ϕ16	7310	30800	7100	5	13500	22800	3040
	10	ϕ15	7060	24400		10	12700		
	20		4560	19400		20	7750		
MCM10	10	ϕ20	10900	33500	7600	10	21700	29400	3380
	20		7060	26600		20	12700		

Notes ●Basic dynamic and static load ratings indicate the values for one slider. ●Basic dynamic load rating of the linear guide is the load of perpendicular direction to the axis that allows 90% of a group of the same Monocarriers to operate " Rated running distance" in the table, that is equivalent to 1 million revolutions of the ball screw and the support unit, under the same condition without causing flaking by rolling contact fatigue. ●Basic dynamic load rating of the ball screw is a load to axial direction that allows 90% of ball screws of a group of the same Monocarriers to rotate 1 million revolutions under the same condition without causing flaking by rolling contact fatigue. ●Basic dynamic load rating of the support unit is a constant load to axial direction that allows 90% of support units of the same group of Monocarriers to rotate 1 million revolutions under the same condition without causing flaking by rolling contact fatigue. ●Basic static load rating is a load that results in combined permanent deformations at the contact points of balls and ball grooves of respective parts is 0.01% of the diameter.

Table 1-12 Basic static moment load of linearguide

Nominal size	Lead (mm)	Slider	Basic static moment (N · m) Rolling M_{RO}	Pitching M_{PO}	Yawing M_{YO}
MCM02	1,2	Single	24	8	8
MCM03	1,2		68	28	28
	10,12		92	51	51
MCM05	5,10,20	Single	229	89	89
		Double	455	765	765
MCM06	5,10,20	Single	415	174	174
		Double	825	1220	1220
MCM08	5,10,20	Single	770	300	300
		Double	1540	2050	2050
MCM10	10,20	Single	1170	425	425
		Double	2340	2940	2940

● Basic static moment of double slider is a value when two sliders equipped with NSK K1 are butted against each other.
● The basic static moment is the value when a rolling contact pressure of balls exceeds 4000 N/mm².
● If you require to apply extremely heavy load, please consult NSK for estimation of fatigue life.

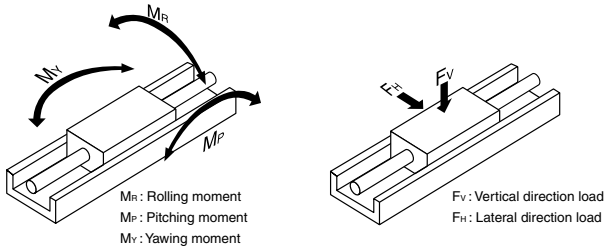

Fig. 1-8

(2) MCH Series Basic Load Rating

Table 1-13 Basic Load Rating

Nominal size	Lead ℓ (mm)	Shaft dia d (mm)	Basic dynamic load rating (N) Ball screw C_a	Linearguide C	Support unit C_a	Rated running distance L_a (km)	Basic static load rating (N) Ball screw C_{0a}	Linearguide C_0	Support unit Limit load (N)
MCH06 (MCL06)	5	ϕ12	3000 (High grade) 3760 (Precision)	22800	4400	5	5410 (High grade) 6310 (Precision)	16300	1450
	10		1930 (High grade) 2260 (Precision)	18100		10	3160 (High grade) 3780 (Precision)		
	20		1930 (High grade) 2260 (Precision)	14400		20	3160 (High grade) 3780 (Precision)		
MCH09	5	ϕ15	6820 (High grade) 7100 (Precision)	40600	7100	5	13200 (High grade) 13000 (Precision)	30500	3040
	10		5110 (High grade) 7060 (Precision)	32200		10	9290 (High grade) 12700 (Precision)		
	20		3290 (High grade) 4560 (Precision)	25500		20	5620 (High grade) 7750 (Precision)		
MCH10	10	ϕ20	8230 (High grade) 10900 (Precision)	44600	7600	10	17100 (High grade) 21700 (Precision)	42000	3380
	20		5300 (High grade) 7060 (Precision)	35400		20	10300 (High grade) 12700 (Precision)		

Notes ●Basic dynamic and static load ratings indicate the values for one slider. ●Basic dynamic load rating of the linear guide is the load of perpendicular direction to the axis that allows 90% of a group of the same Monocarriers to operate " Rated running distance" in the table, that is equivalent to 1 million revolutions of the ball screw and the support unit, under the same condition without causing flaking by rolling contact fatigue. ●Basic dynamic load rating of the ball screw is a load to axial direction that allows 90% of ball screws of a group of the same Monocarriers to rotate 1 million revolutions under the same condition without causing flaking by rolling contact fatigue. ●Basic dynamic load rating of the support unit is a constant load to axial direction that allows 90% of support units of the same group of Monocarriers to rotate 1 million revolutions under the same condition without causing flaking by rolling contact fatigue. ●Basic static load rating is a load that results in combined permanent deformations at the contact points of balls and ball grooves of respective parts is 0.01% of the diameter.

Table 1-14 Basic static moment load of linearguide

Nominal size	Slider	Basic static moment (N · m) Rolling M_{RO}	Pitching M_{PO}	Yawing M_{YO}
MCH06 (MCL06)	Single	335	133	133
	Double	770	730	730
MCH09	Single	890	385	385
	Double	1780	2070	2070
MCH10	Single	1460	610	610
	Double	2920	3430	3430

● Basic static moment of double slider is a value when two sliders equipped with NSK K1 are butted against each other.
● The basic static moment is the value when a rolling contact pressure of balls exceeds 4000 N/mm².
● If you require to apply extremely heavy load, please consult NSK for estimation of fatigue life.

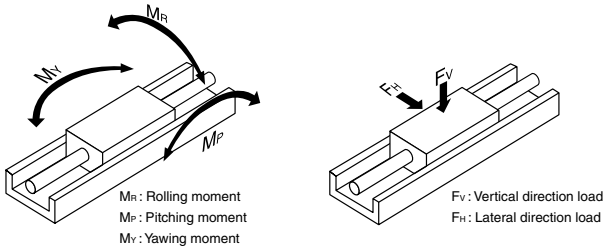

Fig. 1-9

www.bergab.ru Берг АБ bergab@ya.ru Тел. (495)-228-06-21, факс (495) 223-3071

www.bergab.ru Берг АБ bergab@ya.ru Тел. (495)-228-06-21, факс (495) 223-3071

C-Ⅰ-4. 7 Estimation of Life Expectancy

(1) Life of Linear Guide

Study the load to be applied to the linear guide of Monocarrier (Fig. 1-10). The equivalent load (Fe) is determined by substituting the load for equation ① (Eq.② : in case of the tightly coupled double slider type).

● In case of the single slider

$$Fe = Y_H F_H + Y_V F_V + Y_R \mathcal{E}_R M_R + Y_P \mathcal{E}_P M_P + Y_Y \mathcal{E}_Y M_Y \cdots ①$$

● In case of the double slider

$$Fe = \frac{Y_H F_H}{2} + \frac{Y_V F_V}{2} + Y_R \mathcal{E}_{Rd} M_R + Y_P \mathcal{E}_{Pd} M_P + Y_Y \mathcal{E}_{Yd} M_Y \cdots ②$$

F_H : Lateral direction load acting on the slider (N)
F_V : Vertical direction load acting on the slider (N)
M_R : Rolling moment acting on the slider (N · m)
M_P : Pitching moment acting on the slider (N · m)
M_Y : Yawing moment acting on the slider (N · m)
$\mathcal{E}_R$, $\mathcal{E}_{Rd}$
: Dynamic equivalent coefficient to rolling moment
$\mathcal{E}_P$, $\mathcal{E}_{Pd}$
: Dynamic equivalent coefficient to pitching moment
$\mathcal{E}_Y$, $\mathcal{E}_{Yd}$
: Dynamic equivalent coefficient to yawing moment

Refer to Table 1-15 about Dynamic equivalent coefficient.

Y_H, Y_V, Y_R, Y_P, Y_Y
: 1.0 or 0.5

At equations ① and ② for obtaining equivalent load Fe, among F_H, F_V, $\mathcal{E}_P M_P$, $\mathcal{E}_R M_R$, $\mathcal{E}_Y M_Y$, the maximum load is assumed to be 1.0, and others are to be 0.5.

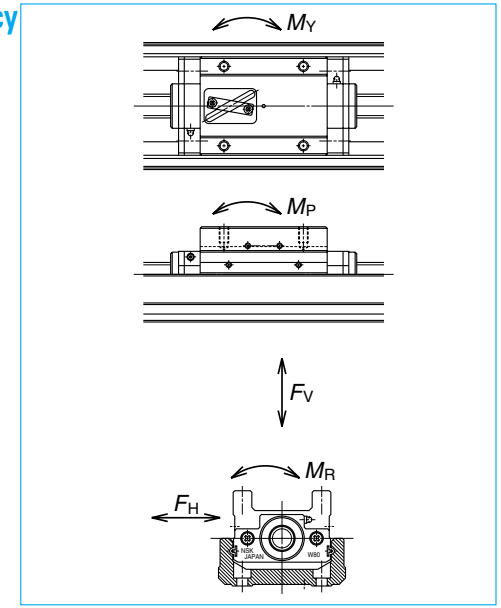

Fig. 1-10 Direction of load

Table 1-15 Dynamic equivalent coefficient

Figures in parentheses( ) are Dynamic equivalent coefficient in case of the Monocarrier without NSK K1.

Nominal size	MCM02	MCM03 lead 1, 2	MCM03 lead 10, 12	MCM05	MCM06	MCM08	MCM10	MCH06 MCL06	MCH09	MCH10
$\mathcal{E}_R$	95.2	79.4	79.4	52.6	45.5	32.5	27.8	48.3	34.5	28.6
$\mathcal{E}_P$	174	113.9	84.2	81.3	65.1	48.8	45.2	75.1	47.9	41.0
$\mathcal{E}_Y$	174	113.9	84.2	81.3	65.1	48.8	45.2	75.1	47.9	41.0
$\mathcal{E}_{Rd}$	–	–	–	26.3	22.7	16.3	13.9	24.2	17.2	14.3
$\mathcal{E}_{Pd}$	–	–	–	10.4(12.2)	9.7(11.5)	7.6(8.6)	7.1(8.0)	11.4(13.2)	8.11(9.10)	6.98(7.82)
$\mathcal{E}_{Yd}$	–	–	–	10.4(12.2)	9.7(11.5)	7.6(8.6)	7.1(8.0)	11.4(13.2)	8.11(9.10)	6.98(7.82)

In case when the load acting on the slider may fluctuate (In general, M_P, M_Y may fluctuate with the acceleration/deceleration of slider), the mean effective load is determined by Eq. ③.

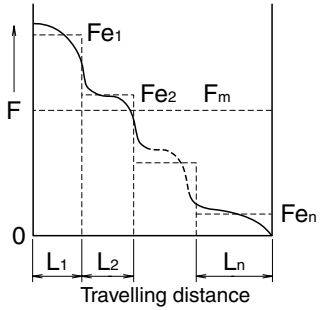

Fig. 1-11 Stepwise Fluctuating Load

Travelling distance under the equiralent load Fe_1 : L_1
Travelling distance under the equiralent load Fe_2 : L_2
. . . . . .
Travelling distance under the equiralent load Fe_n : L_n

$$Fm = \sqrt[3]{\frac{1}{L}\left(Fe_1^3 L_1 + Fe_2^3 L_2 + \cdots Fe_n^3 L_n\right)} \cdots ③$$

Fm : Mean effective load of fluctuating loads
L : Total travelling distance

The life of linear guide is calculated by Eq. ④

$$L = L_a \times \left[\frac{C}{f_W \cdot Fm}\right]^3 \cdots\cdots ④$$

L : Life of linear guide (km)
Fm : Mean effective load acting on the linear guide (N)
C : Basic dynamic load rating of the linear guide (N)
L_a : Travelling distance (km)
f_W : Load factor (Refer to Table 1-16)

When the estimated life does not clear the required life, the life of linear guide is to be calculated again after the following measures are taken:

1. Change from the single slider type to double slider type.
2. Use a larger size Monocarrier.

(2) Life of Ball Screw (Support unit)

The mean effective load is determined from the axial loads. For calculation of the mean effective load, use Eq.③. The life of ball screw is calculated by Eq. ⑤.

$$L = R \times \left[\frac{C_a}{f_W \cdot Fm}\right]^3 \times 10^6 \cdots\cdots ⑤$$

ℓ : Lead of ball screw (mm)
L : Life of ball screw (mm)
C_a : Basic dynamic load rating of the ball screw (N)
Fm : Mean effective load acting on the ball screw (N)
f_W : Load factor (Refer to Table 1-16)

The life of support unit is calculated by Eq. ⑤. If the life of ball screw / support unit does not clear the required life, use a larger size Monocarrier. Upon calculations as mentioned above, selection of Monocarrier completed.

Table 1-16 Values of load factor f_w

Operating conditions	Load factor f_W
At smooth operation with no mechanical shock	1.0～1.2
At normal operation	1.2～1.5
At operation with mechanical shock and vibrations	1.5～3.0

www.bergab.ru Берг АБ bergab@ya.ru Тел. (495)-228-06-21, факс (495) 223-3071

www.bergab.ru Берг АБ bergab@ya.ru Тел. (495)-228-06-21, факс (495) 223-3071

C-I-4. 8 Example of Life Estimation

This section offers an example how to estimate the life of Monocarrier based on the life of each component.

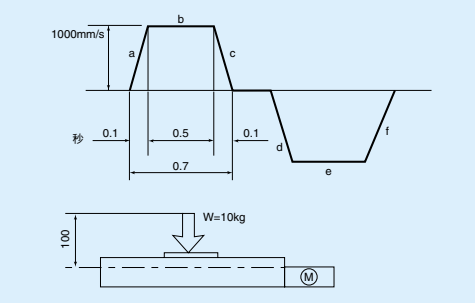

Fig. 1-12

1. Use condition

Stroke	: 600mm
Maximum Speed	: 1000mm/s
Load Mass	: W=10kg
Acceleration	: g=9.8m/s²
Setting Position	: Horizontal
Operating Profile	: See above figure

2. Selection of Nominal size

2-1. Interim Selection

Firstly, select a greater ball screw lead as the maximum speed is 1000 mm/s. The interim selection is MCM06060H20K00, a single slider specification MCM06 that has 600 mm stroke, as the stroke is 600 mm.

3. Calculation

3-1. Linear guide

3-1-1. Fatigue life

Multiply the result of the Eq. ① by the dynamic equivalent coefficient (Table 1-15. single slider) to convert the load volume. From above operation profile,

i) Constant speed $Fe_1=Y_VF_V=Y_VW_g=1\cdot 10\cdot 9.8=98N$

ii) Accelerating $Fe_2=Y_VF_V+Y_P\varepsilon_PM_P=0.5\cdot 10\cdot 9.8+1\cdot 65.1\cdot 0.1\cdot 100=700N$

iii) Decelerating $Fe_3=Y_VF_V+Y_P\varepsilon_PM_P=0.5\cdot 10\cdot 9.8+1\cdot 65.1\cdot 0.1\cdot 100=700N$

Mean effective load *Fm*

$$Fm=\sqrt[3]{\frac{1}{L}\left(Fe_1^3\cdot L_1+Fe_2^3\cdot L_2+Fe_3^3\cdot L_3\right)}$$

$$=\sqrt[3]{\frac{1}{600}\left(98^3\cdot 500+700^3\cdot 50+700^3\cdot 50\right)}$$

$$=387N$$

$$L=\left(\frac{C}{f_w\cdot F_m}\right)^3\times L_a$$

$$=\left(\frac{15900}{1.2\cdot 387}\right)^3\times 20$$

$$=8.02\times 10^5 km$$

3-1-2. Static safety factor ; Divide the basic static load rating by the maximum load.

$$F_S=\frac{C_0}{Fe}=\frac{C_0}{Fe_2}=\frac{17000}{700}=24.2$$

3-2. Ball screw

3-2-1. Fatigue life ; Obtain the axial load of each stage of operation referring to the operation profile, then calculate the mean load.

By the process above,

i) Constant speed

$Fe_1=\mu\cdot W\cdot g=0.01\cdot 10\cdot 9.8=0.98$

ii) Accelerating

$Fe_2=Fe_1+W\alpha=101N$

iii) Decelerating

$Fe_3=Fe_1-W\alpha=99N$

Axial mean effective load *Fm*

$$Fm=\sqrt[3]{\frac{1}{L}\left(Fe_1^3\cdot L_1+Fe_2^3\cdot L_2+Fe_3^3\cdot L_3\right)}$$

$$=\sqrt[3]{\frac{1}{600}\left(0.98^3\cdot 500+101^3\cdot 50+99^3\cdot 50\right)}$$

$$=55N$$

$$L=\left(\frac{C_a}{f_w\cdot F_m}\right)^3\times \ell\times 10^6$$

$$=\left(\frac{4560}{1.2\cdot 55}\right)^3\times 20\times 10^6 (mm)$$

$$=6.5\times 10^6 km$$

3-2-2. Static safety factor ; Divide the basic static load rating by the maximum axial load.

$$F_S=\frac{C_{0a}}{Fe}=\frac{C_{0a}}{Fe_2}=\frac{7750}{101}=76.7$$

3-2-3. Maximum rotational speed ; According to the table of maximum rotational speed on page C7, MCM06 with 20 mm lead and 600 mm stroke, is possible to operate under the maximum speed of 1000 mm/s.

3-3. Support unit

3-3-1. Fatigue life ; Use the axial load Fm = 55 N, that is the result of above calculation 3-2-1.

$$L=\left(\frac{C_a}{fw\cdot Fm}\right)^3\times \ell\times 10^6=\left(\frac{6550}{1.2\times 55}\right)^3\times 20\times 10^6 (mm)$$

$$=1.95\times 10^7 km$$

3-3-2. Static safety factor ; Divide the limit load by the maximum axial load.

$$F_S=\frac{C_{0a}}{Fe}=\frac{C_{0a}}{Fe_2}=\frac{2730}{101}=27.0$$

3.4. Result

MCM06060H20K00	Linear guide	Ball screw	Support unit
Fatigue life	8.02 × 10^5km	6.5 × 10^6km	1.95 × 10^7km
Static safety factor	24.2	76.7	27.0

The shortest fatigue life of linear guide among the components must be taken as the life of the Mononcarrier. The interim selection of MCM06060H20K00, that is chosen based on the use conditions, satisfies the required life.

C-I-5 Maintenance

C-I-5.1 Maintenance Method

1. For standard Monocarrier, we pack grease in slider, linear guides and ball screw.

2. The Monocarriers equip with NSK K1 lubrication unit as a standard feature, and therefore, you can operate it for 5 years or 10 000 km, whichever comes first, without the maintenance. However replenishment of preceded grease may extend its life substantially.

3. NSK K1 lubrication unit demonstrates its effects in environment where oily dust exists. However, the life may be shorter than the case described in the Clause 2 above. In such a case, it requires the measures such as increasing the frequency of replenishment.

4. Nozzle for NSK grease gun exclusive for MCH Monocarries is available as an option.

NSK reperence number : NSK HGP NZ8

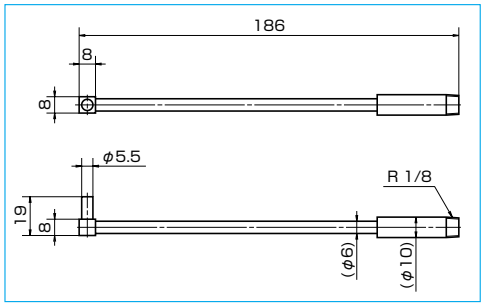

Fig. 1-13 NSK HGP NZ8

Precautions for handling

1. Please consult with NSK when the motor is coupled to the ball screw using a pulley because there is a restriction on allowable torque to the end of ball screw shaft.
2. To extend high performance of NSK K1 lubrication unit, please observe the following.

1. Temperature range	Ambient temperature :	50°C
	Max. instantaneous temperature :	80°C
2. Use of chemicals	Never leave a Monocarrier in close proximity of grease removing organic solvents such as hexane or thinner. Never immerse it in an antirust solvent that contains kerosene.	

Note: Other oils, such as water-based and oil based cutting oil, and grease do not cause any problems.

www.bergab.ru Берг АБ bergab@ya.ru Тел. (495)-228-06-21, факс (495) 223-3071

www.bergab.ru Берг АБ bergab@ya.ru Тел. (495)-228-06-21, факс (495) 223-3071

C-I-5. 2 NSK K1™ Lubricant Unit

NSK K1 lubrication unit exhibits outstanding features, confirmed by abundant experimental data, along with proven performance of linear guides and ball screws that are equipped with NSK K1.

(1) High-speed Durability Test of Linear Guides without Lubricant

Results of high-speed durability testing of linear guide without lubricant are shown in Fig. 1-14. While the linear guide cannot be operated without lubricant for even short periods without damage, the installation of the NSK K1 permits the linear guide to run over 25,000 km without any problem.

Conditions	Test piece: LH30AN (Preload Z1)
	Speed: 3.3 m/s
	Stroke: 1800 mm
No lubricant	All grease removed
NSK K1	All grease removed + NSK K1

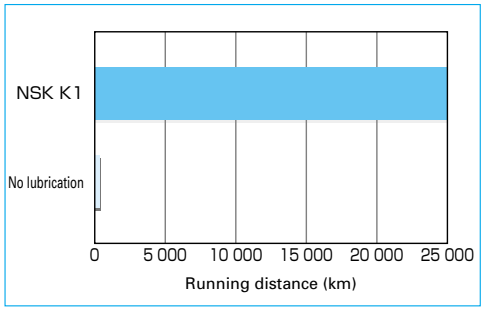

Fig. 1-14 Results of high-speed durability test of linear guides without lubricant

(2) High-speed durability test of ball screws without Lubricant

Results of high-speed durability testing of ball screw without lubrication are shown in Fig.1-15. While the ball screw cannot be operated without a lubricant at 8.5 km without damage, the installation of the NSK K1 permits the ball screw to run over 21,000 km without any problem.

Conditions	Test piece: BS2020 (ball screw)
	Shaft diameter: 20 mm
	Lead: 20 mm
	Load: none
	Speed: 1.3m/s (4 000 min^{-1})
	Stroke: 600 mm
No lubricant	All grease removed
NSK K1	All grease removed + NSK K1

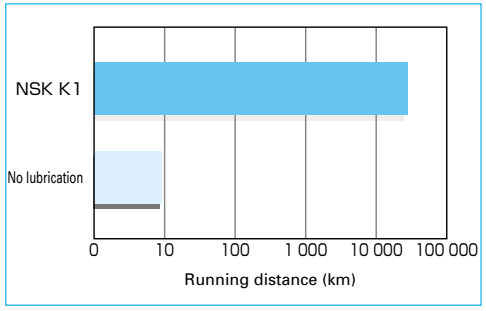

Fig. 1-15 Results of high-speed durability test of ball screws without lubricant

- **NSK K1 lubrication unit for food processing is available.**

For safety equipment of food processing and medical care, NSK provides the Monocarrier equipped with special NSK K1 lubrication unit that is made of compatible material with FDA regulations.

Dimensions are the same as the standard NSK K1 lubrication unit, and special handling care is not required.

www.bergab.ru Берг АБ bergab@ya.ru Тел. (495)-228-06-21, факс (495) 223-3071

C-I-6 NSK Clean Grease LG2 Specification

- **Features**

This grease was developed by NSK to be exclusively used for linear guides and ball screws in clean rooms. Compared to the fluoride grease which are commonly used in clean rooms, LG2 has several advantages such as: Higher in lubrication function, Longer lubrication life, More stable torque (resistant to wear), Higher rust prevention. In dust generation, LG2 is more than equal to fluoride grease in keeping dust volume low. Since the base oil is not a special oil but a mineral oil, LG2 can be handled in the same manner as general grease.

- **Applications**

LG2 is lubrication grease for rolling contact machine components such as linear guides and ball screws for processing equipment for semiconductors and LCD which require highly clean environment at normal pressure at normal temperatures. It cannot be used in a vacuum environment.

- **Nature**

Thickener	Lithium soap base
Base oil	Mineral oil + Synthetic hydrocarbon oil
Consistency	207
Dropping point	200°C
Volume of evaporation	1.40% (99°C, 22hr)
Copper plate corrosion test	Satisfactory (Method B, 100°C, 24hr)
Oil separation	0.8% (100°C, 24hr)
Base oil kinematic Viscosity	30mm²/s (40°C)

C-I-7 Characteristics and Evaluation Method

C-I-7. 1 Positioning Accuracy

Perform positioning successively from the reference position in a specific direction. Measure the difference between the actual and desired travel distances for each point from the reference position. Repeat this measurement seven times to determine the average value. Measure such average value almost over the entire travel distance at the intervals specified for each model and take the maximum difference of the average values determined at respective positions as the measured value.

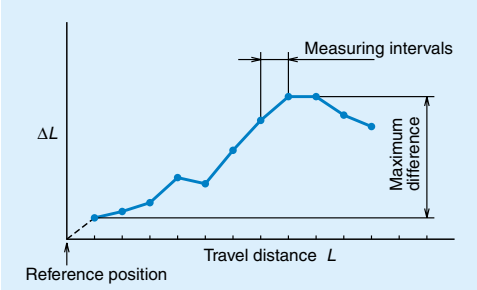

Fig. 1-16

C-I-7. 2 Repeatability

Repeat positioning at any point seven times from the same direction to measure the stopping position and determine one half of the maximum difference of readings. Repeat this measurement almost over the entire travel distance at the intervals specified for each model. Take the maximum difference of the determined values as the measured value. Express one half of the maximum difference with a plus-or-minus (±) sign.

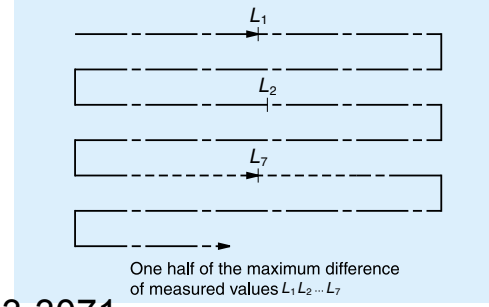

Fig. 1-17

www.bergab.ru Берг АБ bergab@ya.ru Тел. (495)-228-06-21, факс (495) 223-3071

C-I-8 Sensor specification

C-I-8. 1 Proximity switch

Use of OMRON E2S-W13,E2S-W14

Item	E2S – W13 type	E2S – W14 type
Setting surface	Front face	
Sensing distance	1.6mm ±15 %	
Setting distance	0 to 1.2mm	
Differential travel	10% max. of sensing distance	
Detectable object type	Ferrous metal	
Standard sensing object	Iron,12 x 12 x 1mm	
Response frequency	1 kHz min.	
Power supply voltage (operating voltage range)	12 to 24 V DC, ripple (p--p): 10% max., (10 to 30 V DC)	
Current consumption	13 mA max. at 24 V DC with no load	
Control output (Switching Capacity)	NPN open collector output 50 mA max.(30 V DC max.)	
Control output(Residual voltage)	1.0 V max. with a load current of 50 mA and a cable length of 1 m	
Indicator	Operation indicator (orange)	
Operating status (with sensing object approaching)	NO	NC

Movement mode	Output type	Type	Time chart	Output circuit
NO	NPN	E2S-W13 type	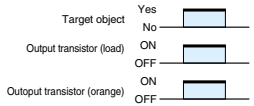	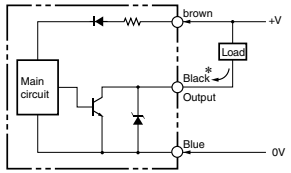 *(Maximum load current : 50mA)
NC		E2S-W14 type	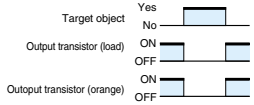	

C-I-8. 2 Photo sensor

Use of OMRON EE-SX674

Item	EE-SX674 type
Slot width	5mm
Standard reference object	Opaque: 2 x 0.8 mm
Differential distance	0.025mm
Light source	GaAs infrared LED with a peak wavelength of 940 nm
Indicator(Without detecting object)	ON GaP red LED (peak emission wavelength: 690 nm).
Supply voltage	5 to 24VDC ±10 %,ripple: (p-p) 10 % max.
Current consumption	35mA max.
Control output	NPN open collector output models:At 5 to 24 VDC: 100 mA load current
Response frequency	1kHz max. (3kHz typ.)
Ambient illumination	Fluorescent light: 1,000 ℓ x max.
Ambient temperature	Operating : -25°C to 55°C (-13°F to 131°F) Storage : -30°C to 80°C (-22°F to 176°F)
Ambient humidity	Operating : 5 to 85 %RH Storage : 5 to 95 %RH
Connecting method	EE-1001/1006 Connectors; soldering terminals

Type	Movement mode	Time chart	Connection terminal	Output circuit
EE-SX674 type	Light-ON	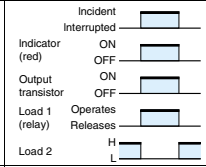	When terminals L and ⊕ are short circuited	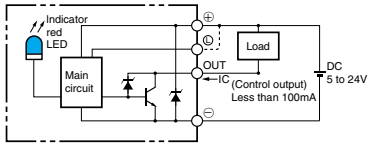
	Dark-ON	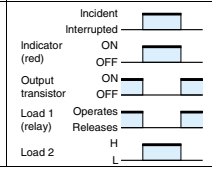	When terminals L and ⊕ are open circuited	

www.bergab.ru Берг АБ bergab@ya.ru Тел. (495)-228-06-21, факс (495) 223-3071

www.bergab.ru Берг АБ bergab@ya.ru Тел. (495)-228-06-21, факс (495) 223-3071

1 MCM Series Reference Number Coding C23
2 MCM Series dimension table of standard prodacts
MCM02 C24
MCM03 C25
MCM05 C27
MCM06 C29
MCM08 C31
MCM10 C33
3 MCM Series Option Part
3. 1 Sensor Unit C35
3. 2 Cover Unit C39
3. 3 Motor Bracket C41

MCM Series

www.bergab.ru Берг АБ bergab@ya.ru Тел. (495)-228-06-21, факс (495) 223-3071

www.bergab.ru Берг АБ bergab@ya.ru Тел. (495)-228-06-21, факс (495) 223-3071

C-Ⅱ MCM Series

C-Ⅱ-1 MCM Series Reference Number Coding

[Body]

Reference number : **MC M 08 040 H 10 K 0 0**

- Monocarrier
- M type: MCM Series
- Nominal size (rail width, Unit: 10mm)
- Stroke (Unit: 10mm)
- Accuracy grade (H: High grade, P: Precision grade)
- Ball screw lead (mm)
- Slider specification K: Single slider (See page C9) D: Double slider
- Grease specification: O (standard AS2)
- Clean grease specification: B (LG2)
- NSK management number

[With Option part]

Reference number : **MC E 08 040 H 10 K 0 0 K 0 0 0**

- E: With MCM option part
- NSK management number
- Sensor unit
- Cover unit
- Motor bracket

Note : Optional components are available separately.

Table 2-1 Sensor unit (See page C35~38)

Reference number code	Specification	Reference number
0	N/A	—
1	Proximity switch (b-contact 3pieces)	MC – SRxx – 10
2	Proximity switch (a-contact 3pieces)	MC – SRxx – 11
3	Proximity switch (a-contact 1pieces, b-contact 2pieces)	MC – SRxx – 12
4	Photo sensor 3pieces	MC – SRxx – 13

Note xx: Reference number

Table 2-2 Cover unit (See page C39~40)

Reference number code	Specification	Reference number
0	N/A	—
1	With top cover	MC – CVxxxxx – 01 (02) ※
2	Full cover	MC – CVxxxxx – 00

Note ※: Monocarrier "-02" is only used for MCM03

Note xxxxx: Reference number and stroke number

Table 2-3 The reference number of motor bracket

Reference number code	Reference number				
	MCM03	MCM05	MCM06	MCM08	MCM10
0	N/A	N/A	N/A	N/A	N/A
1	**MC-BK03-146-00**	**MC-BK05-145-00**	**MC-BK06-145-00**	**MC-BK08-145-00**	**MC-BK10-170-00**
2	**MC-BK03-148-01**	**MC-BK05-146-00**	**MC-BK06-146-00**	**MC-BK08-146-00**	**MC-BK10-170-01**
3	**MC-BK03-231-00**	**MC-BK05-148-00**	**MC-BK06-148-00**	**MC-BK08-160-00**	**MC-BK10-190-00**
4	—	**MC-BK05-160-00**	**MC-BK06-160-00**	**MC-BK08-170-00**	**MC-BK10-270-00**
5	—	**MC-BK05-250-00**	**MC-BK06-170-00**	**MC-BK08-170-01**	—
6	—	—	**MC-BK06-170-01**	**MC-BK08-190-00**	—
7	—	—	**MC-BK06-250-00**	**MC-BK08-250-00**	—
8	—	—	—	**MC-BK08-270-00**	—

C-Ⅱ-2 MCM Series dimension table of standard prodacts

MCM02

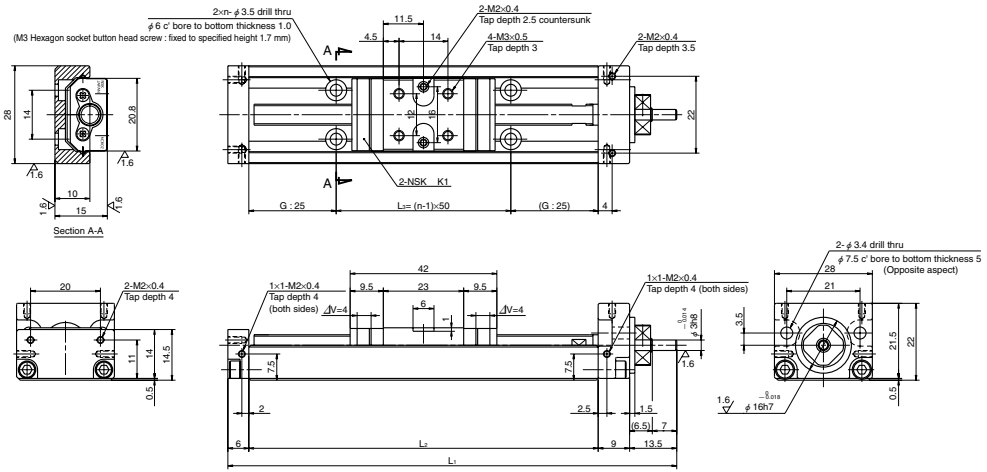

⊿V is thickness of NSK K1

Reference number	Nominal stroke (mm)	Stroke limit (mm)	Ball screw lead (mm)	Body length (mm) L_1	L_2	L_3	No. of mounting hole n	Inertia $\times10^{-7}$ (kg · m²)	Mass (kg)
MCM02005H01K	50	58	1	128.5	100	50	2	0.93	0.26
MCM02005P01K									
MCM02005H02K			2						
MCM02005P02K									
MCM02010H01K	100	108	1	178.5	150	100	3	1.36	0.32
MCM02010P01K									
MCM02010H02K			2						
MCM02010P02K									
MCM02015H01K	150	158	1	228.5	200	150	4	1.81	0.39
MCM02015P01K									
MCM02015H02K			2						
MCM02015P02K									

Items not marked are available from standard stock.

Monocarrier dynamic torque specification (N · cm)		High grade	Precision
Ball screw lead (mm)	1	0.1～1.3	0.2～1.6
	2		

1. Frictional resistance of NSK K1 is included in the dynamic torque in the table.
2. Grease is packed into ball screw, linear guide parts and support unit.
3. Consult NSK for life estimates under large moment loads.
4. Stroke limit = stroke + (4[margin]×2)

Basic load rating

Lead ℓ (mm)	Shaft dia d (mm)	Basic dynamic load rating (N) Ball screw C_a	linear guides C	Support unit C_a	Rated running distance L_a (km)	Basic static load rating (N) Ball screw C_{0a}	Linear guides C_0	Support unit Load limit (N)
1	ϕ6	340 (High grade) 405 (Precision)	4910	615	1	555 (High grade) 615 (Precision)	2120	490
2		340 (High grade) 405 (Precision)	3900		2	555 (High grade) 615 (Precision)		

Basic static moment load of linear guide

Slider	Basic static moment load (N · m) Rolling M_{RO}	Pitching M_{PO}	Yawing M_{YO}
Single	24	8	8

C 24

www.bergab.ru Берг АБ bergab@ya.ru Тел. (495)-228-06-21, факс (495) 223-3071

MCM03

Accuracy grade: Precision (P)

Ball screw lead 1 and 2

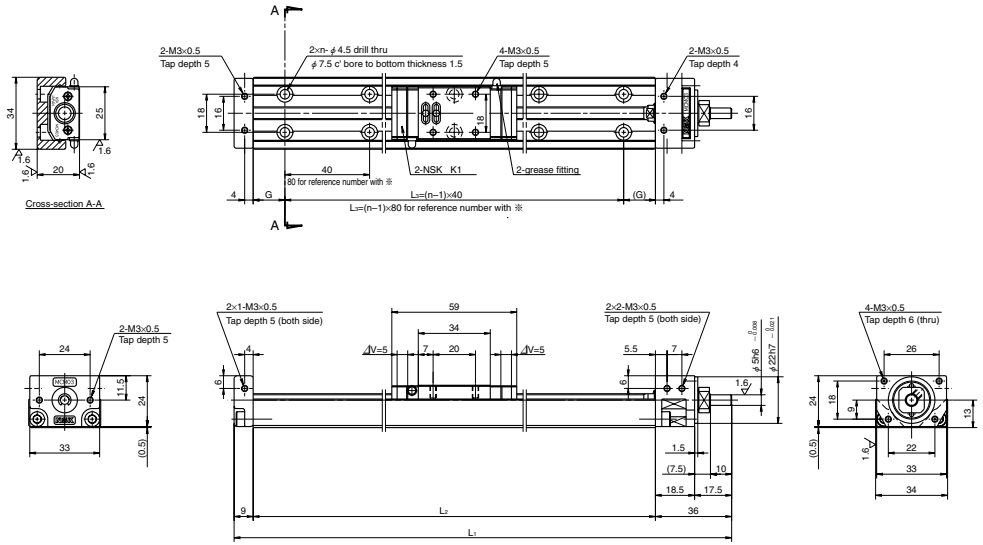

Dimension of MCM03 (Single slider) ⊿V is thickness of NSK K1

Reference number	Nominal stroke (mm)	Stroke limit(mm) (K1 is not equipped)	Ball screw lead (mm)	Body length (mm) L_1	L_2	G	L_3	No. of mounting hole n	Inertia $\times10^{-5}$ (kg · m²)	Mass (kg)
※MCM03005P01K00	50	56	1	160	115	17.5	80	2	0.015	0.6
※MCM03005P02K00		(66)	2						0.016	
MCM03010P01K00	100	131	1	235	190	15	160	5	0.021	0.7
MCM03010P02K00		(141)	2						0.022	
★ MCM03015P01K00	150	181	1	285	240	20	200	6	0.025	0.8
★ MCM03015P02K00		(191)	2						0.026	

Items not marked are available from standard stock.
Items marked with ★ are designated as "quick delivery item" upon request.
Bolt hole pitch L_3 on the items marked with ※ is 80 mm.

Monocarrier dynamic torque specification (N · cm)		
Ball screw lead (mm)	1	0.2～1.7
	2	

1. Frictional resistance of NSK K1 is included in the dynamic torque in the table.
2. Grease is packed into ball screw, linear guide parts and support unit.
3. Consult NSK for life estimates under large moment loads.
4. Optional spacer is required, when I put cover unit, sensor unit or the both together in ball screw lead of 1 and 2mm (See page C39).
5. Stroke limit = stroke + (3[margin] ×2)

Basic load rating

Lead ℓ (mm)	Shaft dia d (mm)	Basic dynamic load rating (N) Ball screw C_a	linear guides C	Support unit C_a	Rated running distance L_a (km)	Basic static load rating (N) Ball screw C_{0a}	Linear guides C_0	Support unit Load limit (N)
1	ϕ6	735	10900	2670	1	1230	4900	1040
2		735	8650		2			

Basic static moment load of linear guide

Slider	Basic static moment load (N · m) RollingM$_{RO}$	PitchingM$_{PO}$	YawingM$_{YO}$
Single	68	28	28

MCM03

Accuracy grade: High grade (H)

Ball screw lead 10 and 12

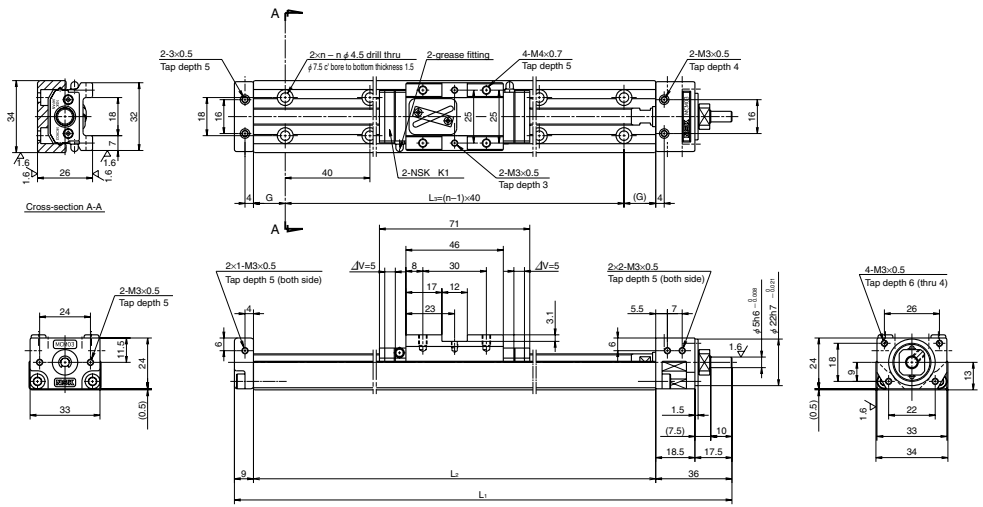

Dimension of MCM03 (Single slider) ⊿V is thickness of NSK K1

Reference number	Nominal stroke (mm)	Stroke limit(mm) (K1 is not equipped)	Ball screw lead (mm)	Body length (mm) L_1	L_2	G	L_3	No. of mounting hole n	Inertia $\times10^{-5}$ (kg · m²)	Mass (kg)
MCM03010H10K00	100	119	10	235	190	15	160	5	0.092	0.7
MCM03010H12K00		(129)	12						0.109	
★ MCM03015H10K00	150	169	10	285	240	20	200	6	0.105	0.8
★ MCM03015H12K00		(179)	12						0.122	
MCM03020H10K00	200	219	10	335	290	25	240	7	0.118	0.9
★ MCM03020H12K00		(229)	12						0.135	
★ MCM03025H10K00	250	269	10	385	340	30	280	8	0.131	1.0
★ MCM03025H12K00		(279)	12						0.147	

Items not marked are available from standard stock.
Items marked with ★ are designated as "quick delivery item" upon request.

Monocarrier dynamic torque specification (N · cm)		
Ball screw lead (mm)	10	0.3～3.0
	12	

1. Frictional resistance of NSK K1 is included in the dynamic torque in the table.
2. Grease is packed into ball screw, linear guide parts and support unit.
3. Consult NSK for life estimates under large moment loads.
4. Stroke limit = stroke + (9.5[margin] ×2)

Basic load rating

Lead ℓ (mm)	Shaft dia d (mm)	Basic dynamic load rating (N) Ball screw C_a	linear guides C	Support unit C_a	Rated running distance L_a (km)	Basic static load rating (N) Ball screw C_{0a}	Linear guides C_0	Support unit Load limit (N)
10	ϕ8	1230	6250	2670	10	1690	6620	1040
12		1230	5880		12			

Basic static moment load of linear guide

Slider	Basic static moment load (N · m) RollingM$_{RO}$	PitchingM$_{PO}$	YawingM$_{YO}$
Single	92	51	51

www.bergab.ru Берг АБ bergab@ya.ru Тел. (495)-228-06-21, факс (495) 223-3071

www.bergab.ru Берг АБ bergab@ya.ru Тел. (495)-228-06-21, факс (495) 223-3071

MCM05

Accuracy grade: High grade (H)

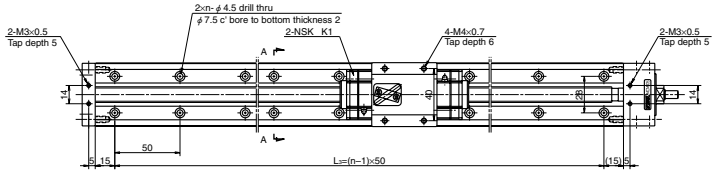

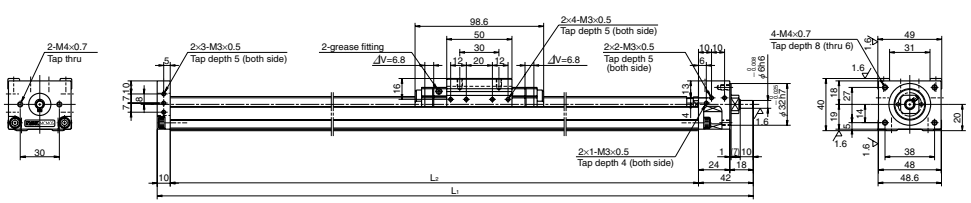

Dimension of MCM05 (Single slider)

ΔV is thickness of NSK K1

Reference number	Nominal stroke (mm)	Stroke limit(mm) (K1 is not equipped)	Ball screw lead (mm)	Body length (mm) L_1	L_2	L_3	No. of mounting hole n	Inertia $\times10^{-4}$ (kg · m²)	Mass (kg)
MCM05005H05K00	50	80	5	232	180	150	4	0.025	1.4
MCM05005H10K00		(95)	10					0.035	
MCM05010H05K00	100	130	5	282	230	200	5	0.031	1.6
MCM05010H10K00		(145)	10					0.040	
★ **MCM05015H05K00**	150	180	5	332	280	250	6	0.036	1.8
MCM05015H10K00		(195)	10					0.046	
MCM05020H05K00	200	230	5	382	330	300	7	0.042	2.0
MCM05020H10K00		(245)	10					0.051	
MCM05025H10K00	250	280 (295)	10	432	380	350	8	0.057	2.2
MCM05030H10K00	300	330	10	482	430	400	9	0.063	2.3
MCM05030H20K00		(345)	20					0.101	
MCM05040H10K00	400	430	10	582	530	500	11	0.074	2.7
MCM05040H20K00		(445)	20					0.112	
MCM05050H10K00	500	530	10	682	630	600	13	0.085	3.1
MCM05050H20K00		(545)	20					0.123	
MCM05060H10K00	600	630	10	782	730	700	15	0.096	3.5
MCM05060H20K00		(645)	20					0.134	

Items not marked are available from standard stock.
Items marked with ★ are designated as "quick delivery item" upon request.

Monocarrier dynamic torque specification (N · cm)		
Ball screw lead (mm)	5	1.0～4.8
	10	1.1～5.8
	20	1.6～7.9

1. Frictional resistance of NSK K1 is included in the dynamic torque in the table.
2. Grease is packed into ball screw, linear guide parts and support unit.
3. Consult NSK for life estimates under large moment loads.
4. Stroke limit = stroke + (15[margin] ×2)

Basic load rating

Lead ℓ (mm)	Shaft dia d (mm)	Basic dynamic load rating (N) Ball screw C_a	linear guides C	Support unit C_a	Rated running distance L_a (km)	Basic static load rating (N) Ball screw C_{0a}	Linear guides C_0	Support unit Load limit (N)
5	ϕ12	3760	15600	4400	5	6310	10900	1450
10		2260	12400		10	3780		
20		2260	9850		20	3780		

Basic static moment load of linear guide

Slider	Basic static moment load (N · m) RollingM$_{RO}$	PitchingM$_{PO}$	YawingM$_{YO}$
Single	229	89	89

MCM05 (Double slider)

Accuracy grade: High grade (H)

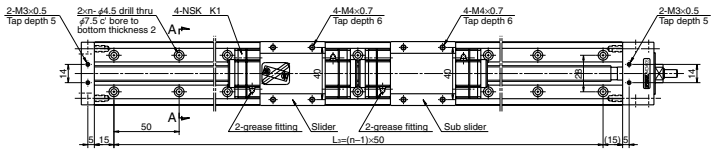

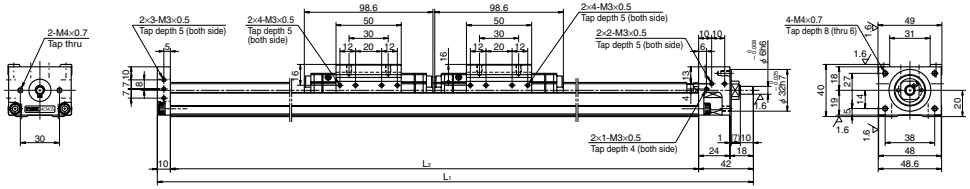

Dimension of MCM05 (Double slider)

ΔV is thickness of NSK K1

Reference number	Nominal stroke (mm)	Stroke limit(mm) (K1 is not equipped)	Ball screw lead (mm)	Body length (mm) L_1	L_2	L_3	No. of mounting hole n	Inertia $\times10^{-4}$ (kg · m²)	Mass (kg)
★**MCM05006H10D00**	60	83 (110)	10	332	280	250	6	0.058	2.3
★**MCM05011H10D00**	110	133 (160)	10	382	330	300	7	0.064	2.5
★**MCM05016H10D00**	160	183 (210)	10	432	380	350	8	0.070	2.7
★**MCM05021H10D00**	210	233	10	482	430	400	9	0.075	2.8
★**MCM05021H20D00**		(260)	20					0.151	
★**MCM05031H10D00**	310	333	10	582	530	500	11	0.086	3.2
★**MCM05031H20D00**		(360)	20					0.162	
★**MCM05041H10D00**	410	433	10	682	630	600	13	0.098	3.6
★**MCM05041H20D00**		(460)	20					0.174	
★**MCM05051H10D00**	510	533	10	782	730	700	15	0.109	4.2
★**MCM05051H20D00**		(560)	20					0.185	

Items not marked are available from standard stock.
Items marked with ★ are designated as "quick delivery item" upon request.

Monocarrier dynamic torque specification (N · cm)		
Ball screw lead (mm)	10	1.5～ 7.6
	20	2.3～11.8

1. Frictional resistance of NSK K1 is included in the dynamic torque in the table.
2. Grease is packed into ball screw, linear guide parts and support unit.
3. Consult NSK for life estimates under large moment loads.
4. Stroke limit = stroke + (11.4[margin] ×2)

Basic load rating

Lead ℓ (mm)	Shaft dia d (mm)	Basic dynamic load rating (N) Ball screw C_a	linear guides C	Support unit C_a	Rated running distance L_a (km)	Basic static load rating (N) Ball screw C_{0a}	Linear guides C_0	Support unit Load limit (N)
5	ϕ12	3760	15600	4400	5	6310	10900	1450
10		2260	12400		10	3780		
20		2260	9850		20	3780		

Basic static moment load of linear guide

Slider	Basic static moment load (N · m) RollingM$_{RO}$	PitchingM$_{PO}$	YawingM$_{YO}$
Double	455	765	765

www.bergab.ru Берг АБ bergab@ya.ru Тел. (495)-228-06-21, факс (495) 223-3071

www.bergab.ru Берг АБ bergab@ya.ru Тел. (495)-228-06-21, факс (495) 223-3071

MCM06

Accuracy grade: High grade (H)

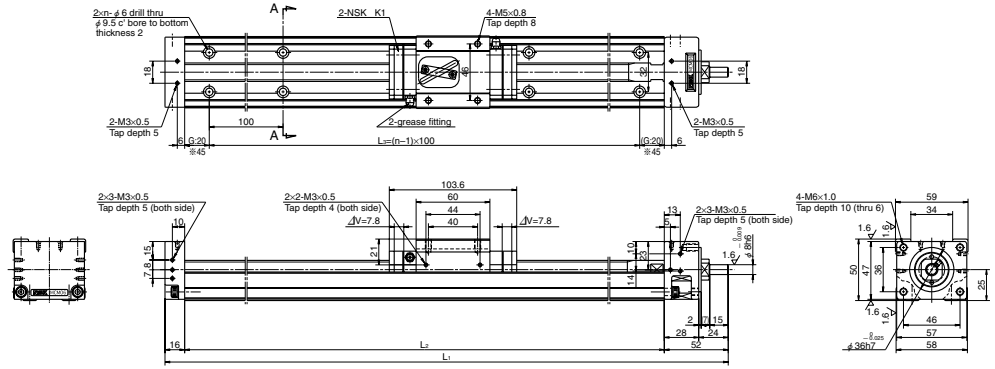

Dimension of MCM06 (Single slider) ΔV is thickness of NSK K1

Reference number	Nominal stroke (mm)	Stroke limit(mm) (K1 is not equipped)	Ball screw lead (mm)	Body length (mm) L_1	L_2	L_3	No. of mounting hole n	Inertia $\times10^{-4}$ (kg · m²)	Mass (kg)
※MCM06005H05K00	50	85	5	258	190	100	2	0.083	2.7
★※MCM06005H10K00		(102)	10					0.077	
MCM06010H05K00	100	135	5	308	240	200	3	0.103	3.0
MCM06010H10K00		(152)	10					0.092	
MCM06020H05K00	200	235	5	408	340	300	4	0.142	3.8
MCM06020H10K00		(252)	10					0.121	
MCM06030H05K00	300	335	5	508	440	400	5	0.180	4.5
MCM06030H10K00		(352)	10					0.150	
MCM06030H20K00			20					0.196	
MCM06040H05K00	400	435	5	608	540	500	6	0.219	5.2
MCM06040H10K00		(452)	10					0.180	
MCM06040H20K00			20					0.225	
★ MCM06050H05K00	500	535	5	708	640	600	7	0.258	6.0
MCM06050H10K00		(552)	10					0.209	
MCM06050H20K00			20					0.255	
★ MCM06060H10K00	600	635	10	808	740	700	8	0.239	6.7
★ MCM06060H20K00		(652)	20					0.284	
MCM06070H10K00	700	735	10	908	840	800	9	0.268	7.4
MCM06070H20K00		(752)	20					0.314	
★ MCM06080H10K00	800	835	10	1008	940	900	10	0.298	8.1
★ MCM06080H20K00		(852)	20					0.343	

Dimension G is 45 for those marked with ※.

Items not marked are available from standard stock.
Items marked with ★ are designated as "quick delivery item" upon request.

Monocarrier dynamic torque specification (N · cm)		
Ball screw lead (mm)	5	1.9～ 7.4
	10	2.2～ 8.6
	20	2.8～11.0

1. Frictional resistance of NSK K1 is included in the dynamic torque in the table.
2. Grease is packed into ball screw, linear guide parts and support unit.
3. Consult NSK for life estimates under large moment loads.
4. Stroke limit = stroke + (17.5[margin] ×2)

Basic load rating

Lead ℓ (mm)	Shaft dia d (mm)	Basic dynamic load rating (N) Ball screw C_a	linear guides C	Support unit C_a	Rated running distance L_a (km)	Basic static load rating (N) Ball screw C_{0a}	Linear guides C_0	Support unit Load limit (N)
5	ϕ16	7310	25200	6550	5	13500	17000	2730
10	ϕ15	7060	20000		10	12700		
20		4560	15900		20	7750		

Basic static moment load of linear guide

Slider	Basic static moment load (N · m) RollingM$_{RO}$	PitchingM$_{PO}$	YawingM$_{YO}$
Single	415	174	174

MCM06 (Double slider)

Accuracy grade: High grade (H)

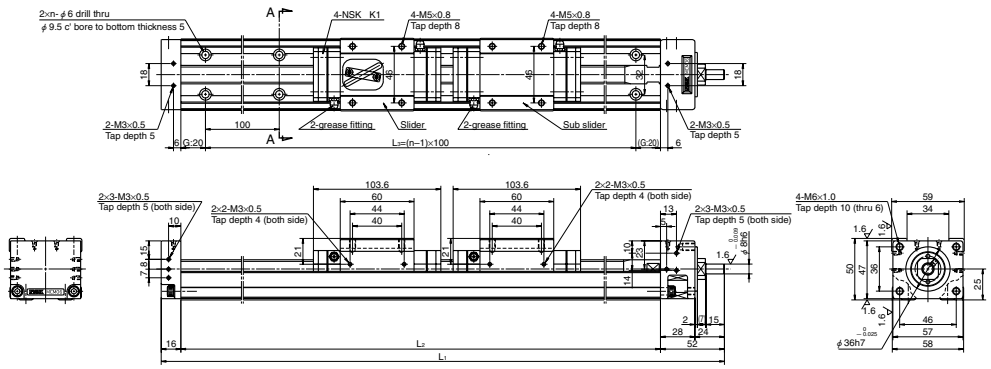

Dimension of MCM06 (Double slider) ΔV is thickness of NSK K1

Reference number	Nominal stroke (mm)	Stroke limit(mm) (K1 is not equipped)	Ball screw lead (mm)	Body length (mm) L_1	L_2	L_3	No. of mounting hole n	Inertia $\times10^{-4}$ (kg · m²)	Mass (kg)
★MCM06011H05D00	110	133	5	408	340	300	4	0.145	4.4
★MCM06011H10D00		(164)	10					0.136	
★MCM06021H05D00	210	233	5	508	440	400	5	0.184	5.1
★MCM06021H10D00		(264)	10					0.166	
★MCM06021H20D00			20					0.257	
★MCM06031H05D00	310	333	5	608	540	500	6	0.223	5.8
★MCM06031H10D00		(364)	10					0.195	
★MCM06031H20D00			20					0.286	
★MCM06041H05D00	410	433	5	708	640	600	7	0.262	6.6
★MCM06041H10D00		(464)	10					0.224	
★MCM06041H20D00			20					0.316	
★MCM06051H10D00	510	533	10	808	740	700	8	0.254	7.3
★MCM06051H20D00		(564)	20					0.345	
★MCM06061H10D00	610	633	10	908	840	800	9	0.283	8.0
★MCM06061H20D00		(664)	20					0.375	
★MCM06071H10D00	710	733	10	1008	940	900	10	0.313	8.7
★MCM06071H20D00		(764)	20					0.404	

Items not marked are available from standard stock.
Items marked with ★ are designated as "quick delivery item" upon request.

Monocarrier dynamic torque specification (N · cm)		
Ball screw lead (mm)	5	2.3～ 8.5
	10	2.7～10.9
	20	4.0～15.9

1. Frictional resistance of NSK K1 is included in the dynamic torque in the table.
2. Grease is packed into ball screw, linear guide parts and support unit.
3. Consult NSK for life estimates under large moment loads.
4. Stroke limit = stroke + (11.4[margin] ×2)

Basic load rating

Lead ℓ (mm)	Shaft dia d (mm)	Basic dynamic load rating (N) Ball screw C_a	linear guides C	Support unit C_a	Rated running distance L_a (km)	Basic static load rating (N) Ball screw C_{0a}	Linear guides C_0	Support unit Load limit (N)
5	ϕ16	7310	25200	6550	5	13500	17000	2730
10	ϕ15	7060	20000		10	12700		
20		4560	15900		20	7750		

Basic static moment load of linear guide

Slider	Basic static moment load (N · m) RollingM$_{RO}$	PitchingM$_{PO}$	YawingM$_{YO}$
Double	825	1220	1220

C 30

www.bergab.ru Берг АБ bergab@ya.ru Тел. (495)-228-06-21, факс (495) 223-3071

www.bergab.ru Берг АБ bergab@ya.ru Тел. (495)-228-06-21, факс (495) 223-3071

MCM08

Accuracy grade: High grade (H)

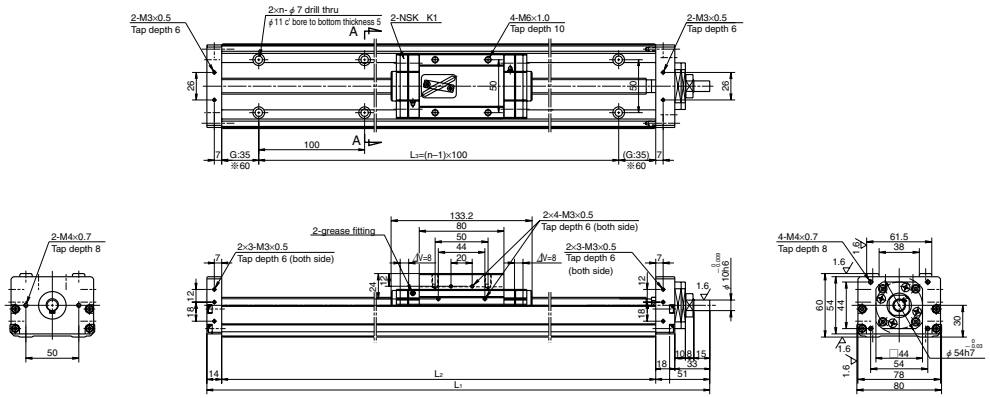

Dimension of MCM08 (Single slider) ΔV is thickness of NSK K1

Reference number	Nominal stroke (mm)	Stroke limit(mm) (K1 is not equipped)	Ball screw lead (mm)	Body length (mm) L_1	L_2	L_3	No. of mounting hole n	Inertia $\times 10^{-4}$ (kg · m²)	Mass (kg)
★※MCM08005H05K00	50	85 (101)	5	285	220	100	2	0.101	4.1
★ MCM08010H05K00	100	135	5	335	270	200	3	0.120	4.6
MCM08010H10K00		(151)	10					0.114	
★※MCM08015H05K00	150	185 (201)	5	385	320	200	3	0.139	5.1
★ MCM08020H05K00	200	235	5	435	370	300	4	0.159	5.5
MCM08020H10K00		(251)	10					0.144	
MCM08030H10K00	300	335	10	535	470	400	5	0.173	6.5
MCM08030H20K00		(351)	20					0.249	
MCM08040H10K00	400	435	10	635	570	500	6	0.203	7.4
MCM08040H20K00		(451)	20					0.279	
MCM08050H10K00	500	535	10	735	670	600	7	0.232	8.4
MCM08050H20K00		(551)	20					0.308	
MCM08060H10K00	600	635	10	835	770	700	8	0.262	9.3
★ MCM08060H20K00		(651)	20					0.338	
★ MCM08070H10K00	700	735	10	935	870	800	9	0.291	10.5
★ MCM08070H20K00		(751)	20					0.367	
★ MCM08080H10K00	800	835	10	1035	970	900	10	0.320	11.2
★ MCM08080H20K00		(851)	20					0.396	

Dimension G is 60 for those marked with ※.

Items not marked are available from standard stock.
Items marked with ★ are designated as "quick delivery item" upon request.

Monocarrier dynamic torque specification (N · cm)		
Ball screw lead (mm)	5	1.0～ 5.9
	10	2.0～ 7.8
	20	2.5～10.8

1. Frictional resistance of NSK K1 is included in the dynamic torque in the table.
2. Grease is packed into ball screw, linear guide parts and support unit.
3. Consult NSK for life estimates under large moment loads.
4. Stroke limit = stroke + (17.5[margin] ×2)

Basic load rating

Lead ℓ (mm)	Shaft dia d (mm)	Basic dynamic load rating (N) Ball screw C_a	linear guides C	Support unit C_a	Rated running distance L_a (km)	Basic static load rating (N) Ball screw C_{0a}	Linear guides C_0	Support unit Load limit (N)
5	φ16	7310	30800	7100	5	13500	22800	3040
10	φ15	7060	24400		10	12700		
20		4560	19400		20	7750		

Basic static moment load of linear guide

Slider	Basic static moment load (N · m) RollingM$_{RO}$	PitchingM$_{PO}$	YawingM$_{YO}$
Single	770	300	300

MCM08 (Double slider)

Accuracy grade: High grade (H)

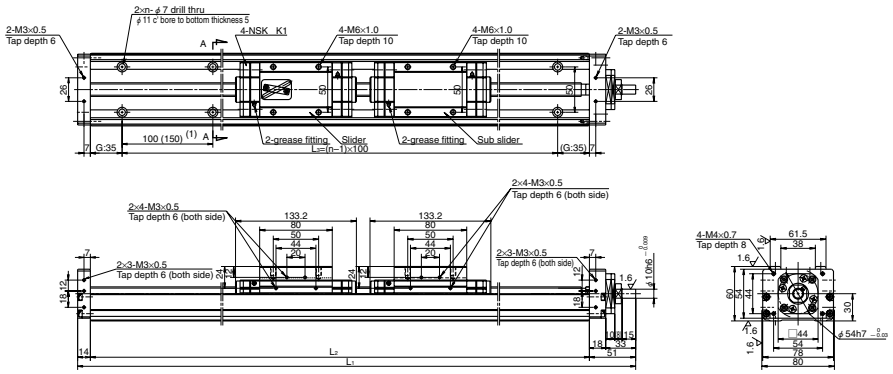

Dimension of MCM08 (Double slider) ΔV is thickness of NSK K1

Reference number	Nominal stroke (mm)	Stroke limit(mm) (K1 is not equipped)	Ball screw lead (mm)	Body length (mm) L_1	L_2	L_3	No. of mounting hole n	Inertia $\times 10^{-4}$ (kg · m²)	Mass (kg)
★●MCM08008H10D00	80	104 (136)	10	435	370	300	3	0.169	6.5
★ MCM08018H10D00	180	204	10	535	470	400	5	0.199	7.5
★ MCM08018H20D00		(236)	20					0.351	
★ MCM08028H10D00	280	304	10	635	570	500	6	0.228	8.4
★ MCM08028H20D00		(336)	20					0.380	
★ MCM08038H10D00	380	404	10	735	670	600	7	0.257	9.4
★ MCM08038H20D00		(436)	20					0.409	
★ MCM08048H10D00	480	504	10	835	770	700	8	0.287	10.3
★ MCM08048H20D00		(536)	20					0.439	
★ MCM08058H10D00	580	604	10	935	870	800	9	0.316	11.5
★ MCM08058H20D00		(636)	20					0.468	
★ MCM08068H10D00	680	704	10	1035	970	900	10	0.346	12.2
★ MCM08068H20D00		(736)	20					0.498	

Dimension (1) is 150mm for those marked with ●.

Items not marked are available from standard stock.
Items marked with ★ are designated as "quick delivery item" upon request.

Monocarrier dynamic torque specification (N · cm)		
Ball screw lead (mm)	10	2.5～10.8
	20	4.0～17.2

1. Frictional resistance of NSK K1 is included in the dynamic torque in the table.
2. Grease is packed into ball screw, linear guide parts and support unit.
3. Consult NSK for life estimates under large moment loads.
4. Stroke limit = stroke + (11.8[margin] ×2)

Basic load rating

Lead ℓ (mm)	Shaft dia d (mm)	Basic dynamic load rating (N) Ball screw C_a	linear guides C	Support unit C_a	Rated running distance L_a (km)	Basic static load rating (N) Ball screw C_{0a}	Linear guides C_0	Support unit Load limit (N)
5	φ16	7310	30800	7100	5	13500	22800	3040
10	φ15	7060	24400		10	12700		
20		4560	19400		20	7750		

Basic static moment load of linear guide

Slider	Basic static moment load (N · m) RollingM$_{RO}$	PitchingM$_{PO}$	YawingM$_{YO}$
Double	1540	2050	2050

C 32

www.bergab.ru Берг АБ bergab@ya.ru Тел. (495)-228-06-21, факс (495) 223-3071

www.bergab.ru Берг АБ bergab@ya.ru Тел. (495)-228-06-21, факс (495) 223-3071

MCM10

Accuracy grade: High grade (H)

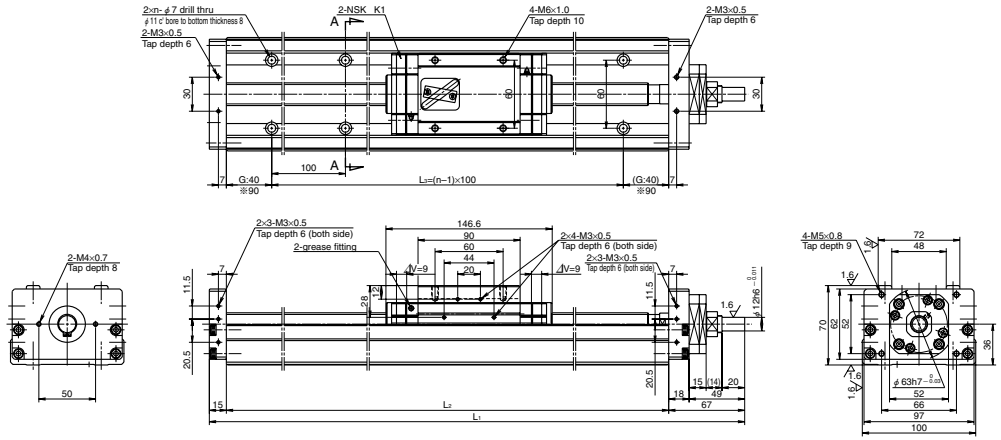

Dimension of MCM10 (Single slider)

ΔV is thickness of NSK K1

Reference number	Nominal stroke (mm)	Stroke limit(mm) (K1 is not equipped)	Ball screw lead (mm)	Body length (mm) L_1	L_2	L_3	No. of mounting hole n	Inertia $\times10^{-4}$ (kg · m²)	Mass (kg)
MCM10020H10K00	200	230 (251)	10	462	380	300	4	0.425	9.5
MCM10030H10K00	300	330	10	562	480	400	5	0.519	11.2
MCM10030H20K00		(351)	20					0.633	
MCM10040H10K00	400	430	10	662	580	500	6	0.612	13.0
MCM10040H20K00		(451)	20					0.726	
★ MCM10050H10K00	500	530	10	762	680	600	7	0.706	14.6
★ MCM10050H20K00		(551)	20					0.820	
MCM10060H10K00	600	630	10	862	780	700	8	0.800	16.3
★ MCM10060H20K00		(651)	20					0.914	
★ MCM10070H10K00	700	730	10	962	880	800	9	0.893	18.0
★ MCM10070H20K00		(751)	20					1.007	
MCM10080H10K00	800	830	10	1062	980	900	10	0.987	19.7
★ MCM10080H20K00		(851)	20					1.101	
★ MCM10090H10K00	900	930	10	1162	1080	1000	11	1.081	21.4
★ MCM10090H20K00		(951)	20					1.195	
★※MCM10100H10K00	1000	1030	10	1262	1180	1000	11	1.174	23.1
★※MCM10100H20K00		(1051)	20					1.288	

Dimension G is 90 for those marked with ※.

Items not marked are available from standard stock.
Items marked with ★ are designated as "quick delivery item" upon request.

Monocarrier dynamic torque specification (N · cm)		
Ball screw lead (mm)	10	2.7～10.8
	20	3.1～12.7

1. Frictional resistance of NSK K1 is included in the dynamic torque in the table.
2. Grease is packed into ball screw, linear guide parts and support unit.
3. Consult NSK for life estimates under large moment loads.
4. Stroke limit = stroke + (15[margin] ×2)

Basic load rating

Lead ℓ (mm)	Shaft dia d (mm)	Basic dynamic load rating (N) Ball screw C_a	linear guides C	Support unit C_a	Rated running distance L_a (km)	Basic static load rating (N) Ball screw C_{0a}	Linear guides C_0	Support unit Load limit (N)
10	φ20	10900	33500	7600	10	21700	29400	3380
20		7060	26600		20	12700		

Basic static moment load of linear guide

Slider	Basic static moment load (N · m) RollingM$_{RO}$	PitchingM$_{PO}$	YawingM$_{YO}$
Single	1170	425	425

MCM10 (Double slider)

Accuracy grade: High grade (H)

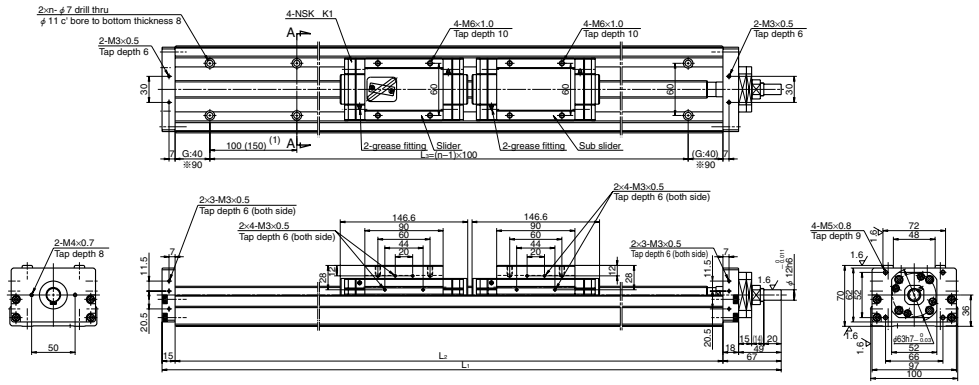

Dimension of MCM10 (Double slider)

ΔV is thickness of NSK K1

Reference number	Nominal stroke (mm)	Stroke limit(mm) (K1 is not equipped)	Ball screw lead (mm)	Body length (mm) L_1	L_2	L_3	No. of mounting hole n	Inertia $\times10^{-4}$ (kg · m²)	Mass (kg)
★●MCM10007H10D00	70	86 (122)	10	462	380	300	3	0.463	11.0
★ MCM10017H10D00	170	186	10	562	480	400	5	0.557	12.7
★ MCM10017H20D00		(222)	20					0.785	
★ MCM10027H10D00	270	286	10	662	580	500	6	0.650	13.4
★ MCM10027H20D00		(322)	20					0.878	
★ MCM10037H10D00	370	386	10	762	680	600	7	0.744	15.1
★ MCM10037H20D00		(422)	20					0.972	
★ MCM10047H10D00	470	486	10	862	780	700	8	0.838	17.8
★ MCM10047H20D00		(522)	20					1.066	
★ MCM10057H10D00	570	586	10	962	880	800	9	0.931	19.5
★ MCM10057H20D00		(622)	20					1.159	
★ MCM10067H10D00	670	686	10	1062	980	900	10	1.025	21.2
★ MCM10067H20D00		(722)	20					1.253	
★※MCM10087H10D00	870	886	10	1262	1180	1000	11	1.212	23.6
★※MCM10087H20D00		(922)	20					1.440	

Dimension G is 90 for those marked with ※.
Dimension (1) is 150mm for those marked with ●.

Items not marked are available from standard stock.
Items marked with ★ are designated as "quick delivery item" upon request.

Monocarrier dynamic torque specification (N · cm)		
Ball screw lead (mm)	10	4.2～15.6
	20	5.0～19.6

1. Frictional resistance of NSK K1 is included in the dynamic torque in the table.
2. Grease is packed into ball screw, linear guide parts and support unit.
3. Consult NSK for life estimates under large moment loads.
4. Stroke limit = stroke + (8.4[margin] ×2)

Basic load rating

Lead ℓ (mm)	Shaft dia d (mm)	Basic dynamic load rating (N) Ball screw C_a	linear guides C	Support unit C_a	Rated running distance L_a (km)	Basic static load rating (N) Ball screw C_{0a}	Linear guides C_0	Support unit Load limit (N)
10	φ20	10900	33500	7600	10	21700	29400	3380
20		7060	26600		20	12700		

Basic static moment load of linear guide

Slider	Basic static moment load (N · m) RollingM$_{RO}$	PitchingM$_{PO}$	YawingM$_{YO}$
Double	2340	2940	2940

www.bergab.ru Берг АБ bergab@ya.ru Тел. (495)-228-06-21, факс (495) 223-3071

www.bergab.ru Берг АБ bergab@ya.ru Тел. (495)-228-06-21, факс (495) 223-3071

C-Ⅱ-3 MCM Series Option Part

C-Ⅱ-3. 1 Sensor Unit

Standard stock

●Proximity switch

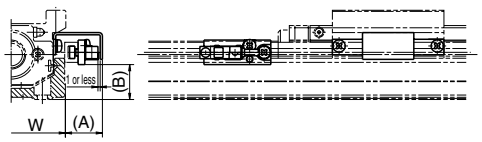

(Example of assembly)

Type		Reference number			Dimension (A) (mm)	Dimension (B) (mm)	Body width W (mm)
MCM02		MC-SR02-00	MC-SR02-01	MC-SR02-02	17	2	28
MCM03		MC-SR03-10	MC-SR03-11	MC-SR03-12	17	3	34
MCM05		MC-SR05-10	MC-SR05-11	MC-SR05-12	17	15	48.6
MCM06		MC-SR06-10	MC-SR06-11	MC-SR06-12	17	19	58
MCM08		MC-SR08-10	MC-SR08-11	MC-SR08-12	16	27	80
MCM10		MC-SR10-10	MC-SR10-11	MC-SR10-12	16	35	100
quantity	Proximity switch (a-contact)	—	3	1	E2S-W13(OMRON Corp.)		
	Proximity switch (b-contact)	3	—	2	E2S-W14(OMRON Corp.)		

*See page C19 for specification of proximity switch A sensor unit consists of sensors, a sensor dog and sensor mounring parts.

You require an optional spacer plate when you use a cover unit or a sensor unit for an MCM03 with the lead of 1 or 2 mm. (Refer to page C39.)

●Photo sensor

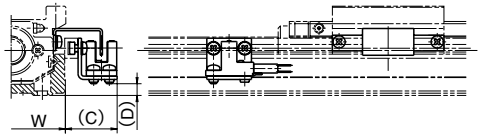

(Example of assembly)

Type	Reference number	Dimension (C) (mm)	Dimension (D) (mm)	Body width W (mm)	Remarks
MCM03	MC-SR03-13	24	0.5	34	EE-SX674(OMRON Corp.) 3 sets (EE-1001 connector attachment)
MCM05	MC-SR05-13	24	5	48.6	
MCM06	MC-SR06-13	24	9	58	
MCM08	MC-SR08-13	23	17	80	
MCM10	MC-SR10-13	22	24	100	

*See page C20 for specification of photo sensor A sensor unit consists of sensors, a sensor dog and sensor mounring parts.

You require an optional spacer plate when you use a cover unit or a sensor unit for an MCM03 with the lead of 1 or 2 mm. (Refer to page C39.)

(1) Sensor rail

Standard stock

Sensor rail for MCM03: MC-SRL3-＊＊＊＊

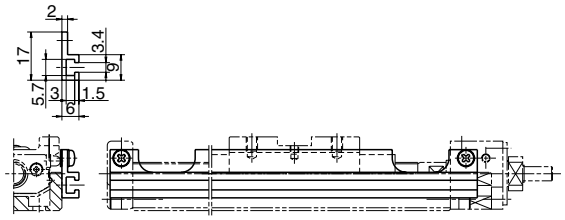

(Example of assembly)

Sensor rail for MCM05: MC-SRL5-＊＊＊＊

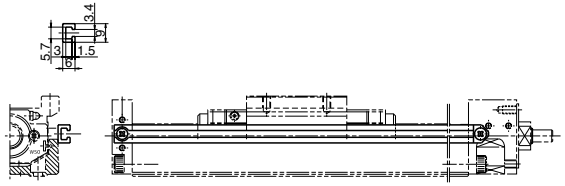

(Example of assembly)

Sensor rail for MCM02: MC-SRL2-＊＊＊＊
Sensor rail for MCM06: MC-SRL6-＊＊＊＊
Sensor rail for MCM08: MC-SRL8-＊＊＊＊
Sensor rail for MCM10: MC-SRL1-＊＊＊＊

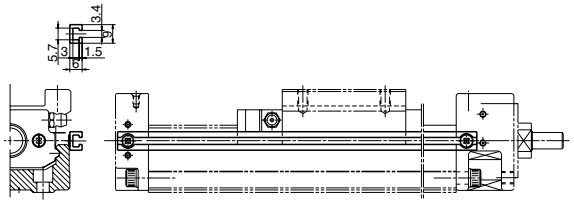

(Example of assembly)

＊＊＊＊ is the same as rail dimension L_2

Please place and assemble the seat during the attachment between the sensor rail and the support unit attaching part for MCM03 and MCM06.

C 36

www.bergab.ru Берг АБ bergab@ya.ru Тел. (495)-228-06-21, факс (495) 223-3071

www.bergab.ru Берг АБ bergab@ya.ru Тел. (495)-228-06-21, факс (495) 223-3071

Body of MCM Series and Sensor rail combination Table

Table 2-4

Nominal size	Body length L_2 (mm)	Reference number	Sensor rail reference number
MCM02	100	MCM02005H01K MCM02005P01K MCM02005H02K MCM02005P02K	MC-SRL2-0100
	150	MCM02010H01K MCM02010P01K MCM02010H02K MCM02010P02K	MC-SRL2-0150
	200	MCM02015H01K MCM02015P01K MCM02015H02K MCM02015P02K	MC-SRL2-0200
MCM03	115	MCM03005P01K00 MCM03005P02K00	MC-SRL3-0115
	190	MCM03010P01K00 MCM03010P02K00 MCM03010H10K00 MCM03010H12K00	MC-SRL3-0190
	240	MCM03015P01K00 MCM03015P02K00 MCM03015H10K00 MCM03015H12K00	MC-SRL3-0240
	290	MCM03020H10K00 MCM03020H12K00	MC-SRL3-0290
	340	MCM03025H10K00 MCM03025H12K00	MC-SRL3-0340
MCM05	180	MCM05005H05K00 MCM05005H10K00	MC-SRL5-0180
	230	MCM05010H05K00 MCM05010H10K00	MC-SRL5-0230
	280	MCM05015H05K00 MCM05015H10K00 MCM05006H10D00	MC-SRL5-0280
	330	MCM05020H05K00 MCM05020H10K00 MCM05011H10D00	MC-SRL5-0330
	380	MCM05025H10K00 MCM05016H10D00	MC-SRL5-0380
	430	MCM05030H10K00 MCM05030H20K00 MCM05021H10D00 MCM05021H20D00	MC-SRL5-0430
	530	MCM05040H10K00 MCM05040H20K00 MCM05031H10D00 MCM05031H20D00	MC-SRL5-0530
	630	MCM05050H10K00 MCM05050H20K00 MCM05041H10D00 MCM05041H20D00	MC-SRL5-0630
	730	MCM05060H10K00 MCM05060H20K00 MCM05051H10D00 MCM05051H20D00	MC-SRL5-0730

Nominal size	Body length L_2 (mm)	Reference number	Sensor rail reference number
MCM06	190	MCM06005H05K00 MCM06005H10K00	MC-SRL6-0190
	240	MCM06010H05K00 MCM06010H10K00	MC-SRL6-0240
	340	MCM06020H05K00 MCM06020H10K00 MCM06011H05D00 MCM06011H10D00	MC-SRL6-0340
	440	MCM06030H05K00 MCM06030H10K00 MCM06030H20K00 MCM06021H05D00 MCM06021H10D00 MCM06021H20D00	MC-SRL6-0440
	540	MCM06040H05K00 MCM06040H10K00 MCM06040H20K00 MCM06031H05D00 MCM06031H10D00 MCM06031H20D00	MC-SRL6-0540
	640	MCM06050H05K00 MCM06050H10K00 MCM06050H20K00 MCM06041H05D00 MCM06041H10D00 MCM06041H20D00	MC-SRL6-0640
	740	MCM06060H10K00 MCM06060H20K00 MCM06051H10D00 MCM06051H20D00	MC-SRL6-0740
	840	MCM06070H10K00 MCM06070H20K00 MCM06061H10D00 MCM06061H20D00	MC-SRL6-0840
	940	MCM06080H10K00 MCM06080H20K00 MCM06071H10D00 MCM06071H20D00	MC-SRL6-0940

Nominal size	Body length L_2 (mm)	Reference number	Sensor rail reference number
MCM08	220	MCM08005H05K00	MC-SRL8-0220
	270	MCM08010H05K00 MCM08010H10K00	MC-SRL8-0270
	320	MCM08015H05K00	MC-SRL8-0320
	370	MCM08020H05K00 MCM08020H10K00 MCM08008H10D00	MC-SRL8-0370
	470	MCM08030H10K00 MCM08030H20K00 MCM08018H10D00 MCM08018H20D00	MC-SRL8-0470
	570	MCM08040H10K00 MCM08040H20K00 MCM08028H10D00 MCM08028H20D00	MC-SRL8-0570
	670	MCM08050H10K00 MCM08050H20K00 MCM08038H10D00 MCM08038H20D00	MC-SRL8-0670
	770	MCM08060H10K00 MCM08060H20K00 MCM08048H10D00 MCM08048H20D00	MC-SRL8-0770
	870	MCM08070H10K00 MCM08070H20K00 MCM08058H10D00 MCM08058H20D00	MC-SRL8-0870
	970	MCM08080H10K00 MCM08080H20K00 MCM08068H10D00 MCM08068H20D00	MC-SRL8-0970
MCM10	380	MCM10020H10K00 MCM10007H10D00	MC-SRL1-0380
	480	MCM10030H10K00 MCM10030H20K00 MCM10017H10D00 MCM10017H20D00	MC-SRL1-0480
	580	MCM10040H10K00 MCM10040H20K00 MCM10027H10D00 MCM10027H20D00	MC-SRL1-0580
	680	MCM10050H10K00 MCM10050H20K00 MCM10037H10D00 MCM10037H20D00	MC-SRL1-0680
	780	MCM10060H10K00 MCM10060H20K00 MCM10047H10D00 MCM10047H20D00	MC-SRL1-0780
	880	MCM10070H10K00 MCM10070H20K00 MCM10057H10D00 MCM10057H20D00	MC-SRL1-0880
	980	MCM10080H10K00 MCM10080H20K00 MCM10067H10D00 MCM10067H20D00	MC-SRL1-0980
	1080	MCM10090H10K00 MCM10090H20K00	MC-SRL1-1080
	1180	MCM10100H10K00 MCM10100H20K00 MCM10087H10D00 MCM10087H20D00	MC-SRL1-1180

www.bergab.ru Берг АБ bergab@ya.ru Тел. (495)-228-06-21, факс (495) 223-3071

www.bergab.ru Берг АБ bergab@ya.ru Тел. (495)-228-06-21, факс (495) 223-3071

C-Ⅱ-3. 2 Cover Unit

Standard stock

Cover Unit for MCM02

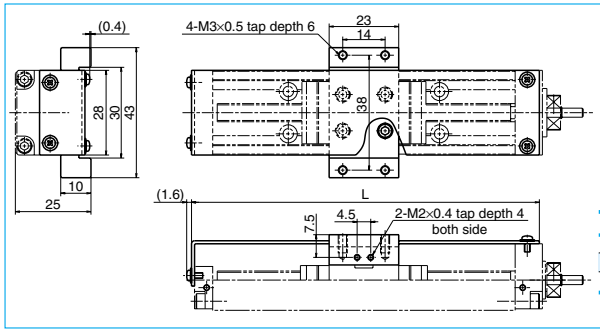

(Unit: mm)

Stroke	Reference number	Length(*L*)
50	**MC-CV02005-00**	115
100	**MC-CV02010-00**	165
150	**MC-CV02015-00**	215

Height of screw head is not included.

Cover Unit for MCM03

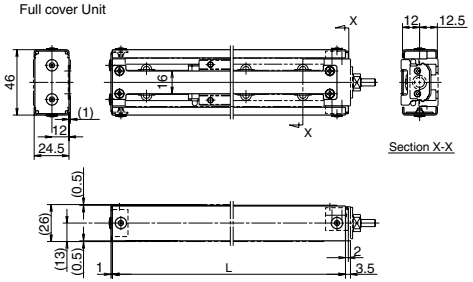

· Optional spacer (MC-SP03-00) is required for a main unit with ball screw lead of 1 and 2 mm.

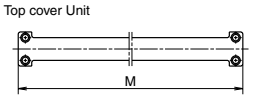

(Unit: mm)

Stroke	Reference number		Cover Length	
	Top cover Unit	Full cover Unit	Length (*L*)	Length (*M*)
50	**MC-CV03005-02**	***MC-CV03005-01**	139	133
100	**MC-CV03010-02**	***MC-CV03010-01**	214	208
150	**MC-CV03015-02**	***MC-CV03015-01**	264	258
200	**MC-CV03020-02**	***MC-CV03020-01**	314	308
250	**MC-CV03025-02**	***MC-CV03025-01**	364	358

*The full-cover unit cannot be used when the sensor unit is used. Height of screw head is not included.

Spacer for MCM03 (Optional) MC-SP03-00 (for ball screw lead 1 and 2 mm)

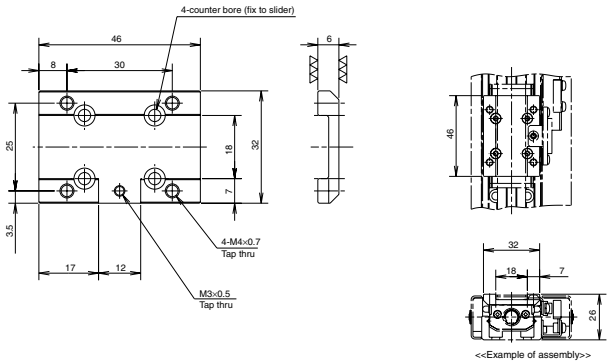

Cover Unit for MCM05, 06, 08, and 10

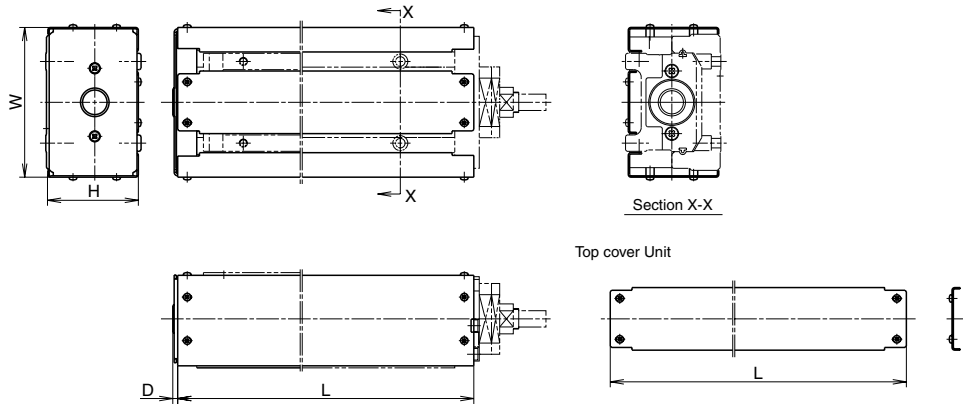

(Unit: mm)

Reference number	Stroke		Cover unit Reference number		Cover length			
	Single slider	Double slider	Top cover Unit	Full cover Unit	Length (L)	Height (H)	Width (W)	End part (D)
MCM05	50	—	MC-CV05005-01	MC-CV05005-00	200	38.5	65	2.6
	100	—	MC-CV05010-01	MC-CV05010-00	250			
	150	60	MC-CV05015-01	MC-CV05015-00	300			
	200	110	MC-CV05020-01	MC-CV05020-00	350			
	250	160	MC-CV05025-01	MC-CV05025-00	400			
	300	210	MC-CV05030-01	MC-CV05030-00	450			
	400	310	MC-CV05040-01	MC-CV05040-00	550			
	500	410	MC-CV05050-01	MC-CV05050-00	650			
	600	510	MC-CV05060-01	MC-CV05060-00	750			
MCM06	50	—	MC-CV06005-01	MC-CV06005-00	225	48.5	75	—
	100	—	MC-CV06010-01	MC-CV06010-00	275			
	200	110	MC-CV06020-01	MC-CV06020-00	375			
	300	210	MC-CV06030-01	MC-CV06030-00	475			
	400	310	MC-CV06040-01	MC-CV06040-00	575			
	500	410	MC-CV06050-01	MC-CV06050-00	675			
	600	510	MC-CV06060-01	MC-CV06060-00	775			
	700	610	MC-CV06070-01	MC-CV06070-00	875			
	800	710	MC-CV06080-01	MC-CV06080-00	975			
MCM08	50	—	MC-CV08005-01	MC-CV08005-00	248	56.5	90	2.6
	100	—	MC-CV08010-01	MC-CV08010-00	298			
	200	80	MC-CV08020-01	MC-CV08020-00	398			
	300	180	MC-CV08030-01	MC-CV08030-00	498			
	400	280	MC-CV08040-01	MC-CV08040-00	598			
	500	380	MC-CV08050-01	MC-CV08050-00	698			
	600	480	MC-CV08060-01	MC-CV08060-00	798			
	700	580	MC-CV08070-01	MC-CV08070-00	898			
	800	680	MC-CV08080-01	MC-CV08080-00	998			
MCM10	200	70	MC-CV10020-01	MC-CV10020-00	408	66.5	110	2.6
	300	170	MC-CV10030-01	MC-CV10030-00	508			
	400	270	MC-CV10040-01	MC-CV10040-00	608			
	500	370	MC-CV10050-01	MC-CV10050-00	708			
	600	470	MC-CV10060-01	MC-CV10060-00	808			
	700	570	MC-CV10070-01	MC-CV10070-00	908			
	800	670	MC-CV10080-01	MC-CV10080-00	1008			
	900	—	MC-CV10090-01	MC-CV10090-00	1108			
	1000	870	MC-CV10100-01	MC-CV10100-00	1208			

Not include height such as screw

The dimensions of cover shown abore do not include the head height of fixing machine screws. Add the head of machine screws of approximately 2.5 mm to the outer measurement of a cover unit. Set a margin for mechanical interference with surrounding components.
*When you use a sensor unit, the full-cover unit cannot be used.

www.bergab.ru Берг АБ bergab@ya.ru Тел. (495)-228-06-21, факс (495) 223-3071

www.bergab.ru Берг АБ bergab@ya.ru Тел. (495)-228-06-21, факс (495) 223-3071

C-Ⅱ-3. 3 Motor Bracket

Standard stock

Motor Bracket for MCM02

■Reference number
MC-BK02-128-00

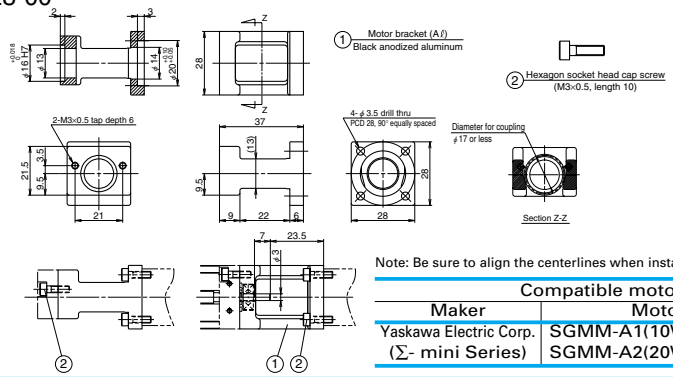

Note: Be sure to align the centerlines when installing the motor.

Compatible motor	
Maker	Motor models
Yaskawa Electric Corp. (Σ- mini Series)	SGMM-A1(10W) SGMM-A2(20W)

■Reference number
MC-BK02-133-00

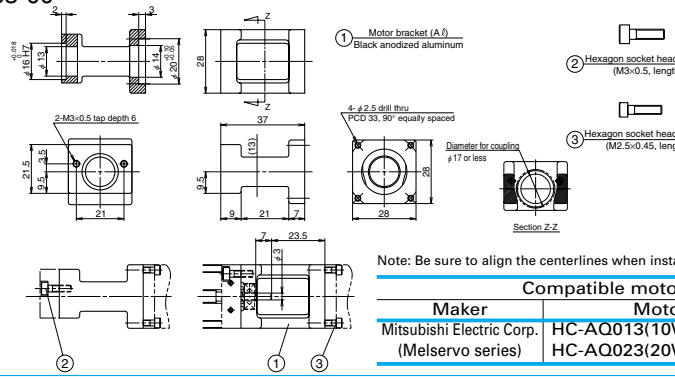

Note: Be sure to align the centerlines when installing the motor.

Compatible motor	
Maker	Motor models
Mitsubishi Electric Corp. (Melservo series)	HC-AQ013(10W) HC-AQ023(20W)

■Reference number
MC-BK02-223-00

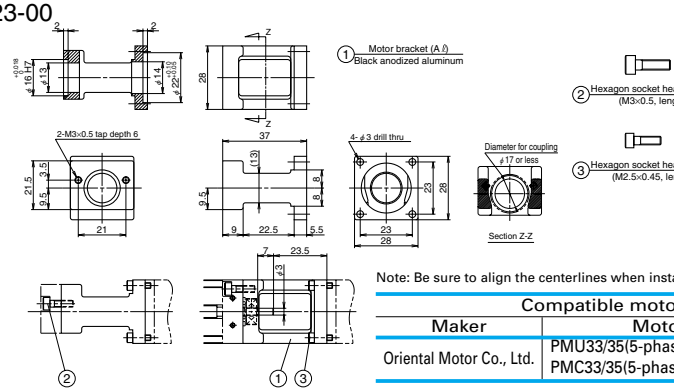

Note: Be sure to align the centerlines when installing the motor.

Compatible motor	
Maker	Motor models
Oriental Motor Co., Ltd.	PMU33/35(5-phase stepping motor) PMC33/35(5-phase stepping motor)

Motor Bracket for MCM03

Standard stock

■Reference number
MC-BK03-146-00

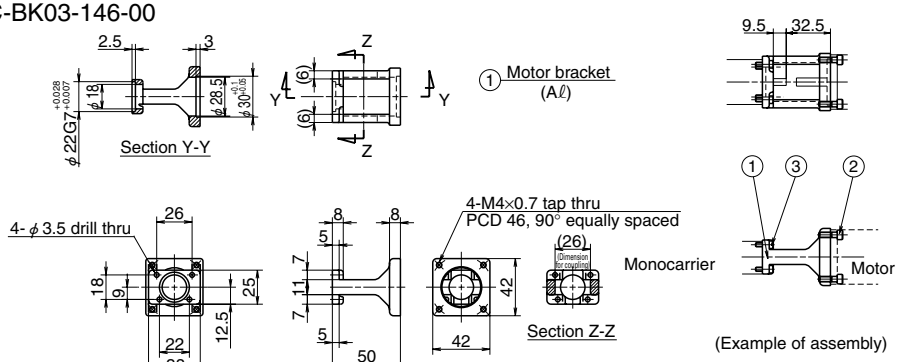

Note: Be sure to align the centerlines when installing the motor.
Be careful for the assembly orientation of bracket.

② Hexagon socket head cap screw (M4, length 12)
③ Hexagon socket head cap screw (M3, length 10)

Compatible motor	
Maker	Motor models
Yaskawa Electric Corp.	SGMAH-A3(30W), SGMAH-A5(50W), SGMAS-A5A(50W) SGMAH-01(100W), SGMAS-01A(100W)
Mitsubishi Electric Corp.	HF-KP053(50W), HF-MP053(50W), HC-KFS053(50W), HC-MFS053(50W) HF-KP13(100W), HF-MP13(100W), HC-KFS13(100W), HC-MFS13(100W)
OMRON Corp.	R88M-W03(30W), R88M-W05(50W), R88M-W10(100W)
Sanyo Denki Co., Ltd.	P30B04003(30W), P30B04005(50W), P30B04006(60W), P30B04010(100W)

Motor Bracket for MCM03

Standard stock

■Reference number
MC-BK03-148-01

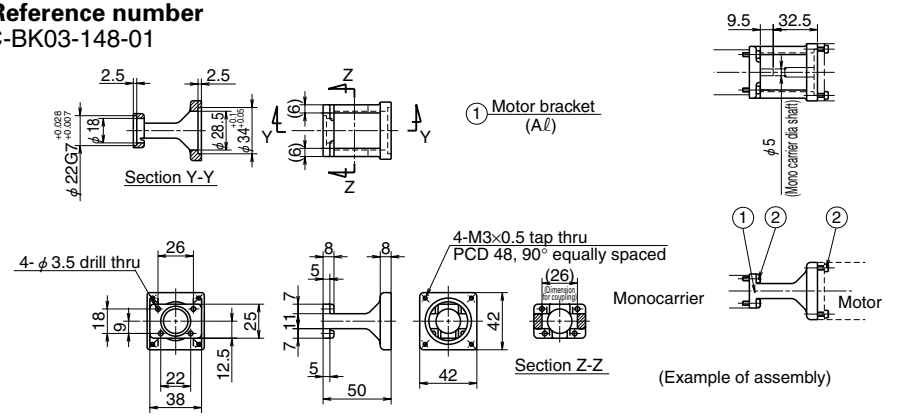

Note: Be sure to align the centerlines when installing the motor.
Be careful for the assembly orientation of bracket.

② Hexagon socket head cap screw (M3, length 10)

Compatible motor	
Maker	Motor models
Sanyo Denki Co., Ltd.	P50B04040(60W), P50B04010(100W)

C 42

www.bergab.ru Берг АБ bergab@ya.ru Тел. (495)-228-06-21, факс (495) 223-3071

www.bergab.ru Берг АБ bergab@ya.ru Тел. (495)-228-06-21, факс (495) 223-3071

Motor Bracket for MCM03

Standard stock

■Reference number
MC-BK03-231-00

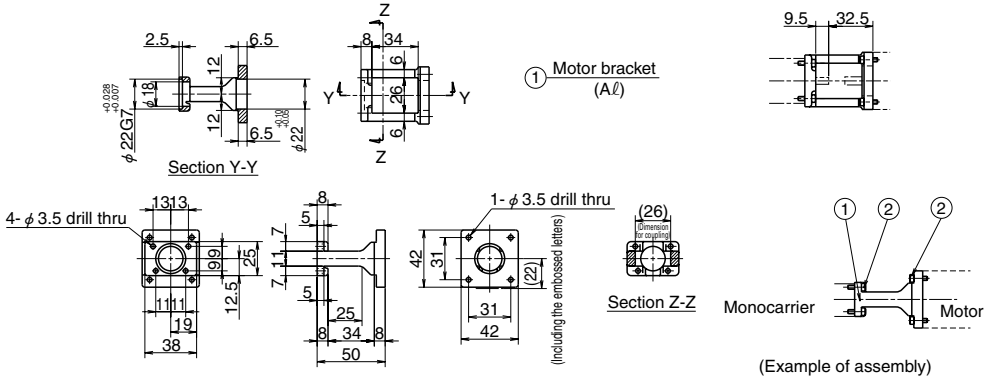

① Motor bracket (Aℓ)

② Hexagon socket head cap screw (M3, length 10)

Note: Be sure to align the centerlines when installing the motor.
Be careful for the assembly orientation of bracket.

Compatible motor	
Maker	Motor models
Sanyo Denki Co., Ltd.	PBM423xxx, 103F55xx
Oriental Motor Co., Ltd.	AS46, ASC46, UPK54x, PK54x, CSK54x, CFK54x UMK24x, CSK24x, PK24x

Motor Bracket for MCM05

Standard stock

■Reference number
MC-BK05-146-00

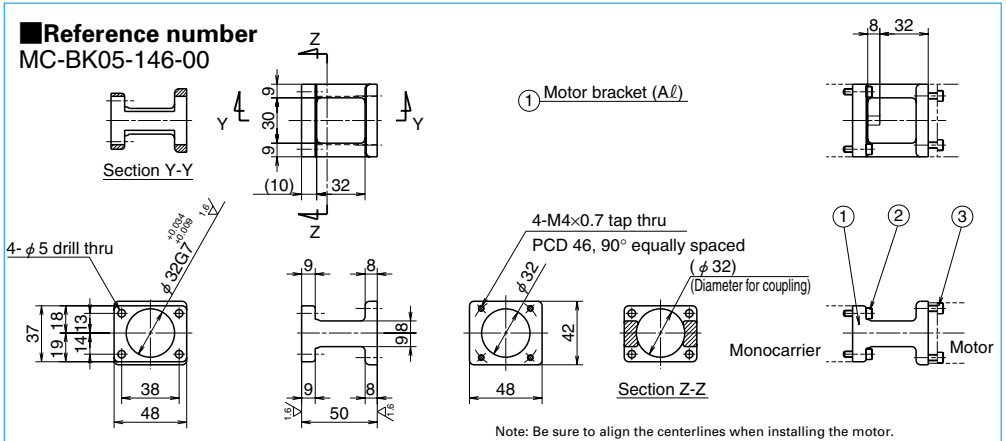

① Motor bracket (Aℓ)

② Hexagon socket head cap screw (M4, length 15)

③ Hexagon socket head cap screw (M4, length 12)

Note: Be sure to align the centerlines when installing the motor.
Be careful for the assembly orientation of bracket.

Compatible motor	
Maker	Motor models
Yaskawa Electric Corp.	SGMAH-A3(30W), SGMAH-A5(50W), SGMAS-A5A(50W), SGMAH-01(100W), SGMAS-01A(100W)
Mitsubishi Electric Corp.	HF-KP053(50W), HF-MP053(50W), HC-KFS053(50W), HC-MFS053(50W) HF-KP13(100W), HF-MP13(100W), HC-KFS13(100W), HC-MFS13(100W)
OMRON Corp.	R88M-W03(30W), R88M-W05(50W), R88M-W10(100W)
Sanyo Denki Co., Ltd.	P30B04003(30W), P30B04005(50W), P30B04006(60W), P30B04010(100W)

Motor Bracket for MCM05

Standard stock

■Reference number
MC-BK05-145-00

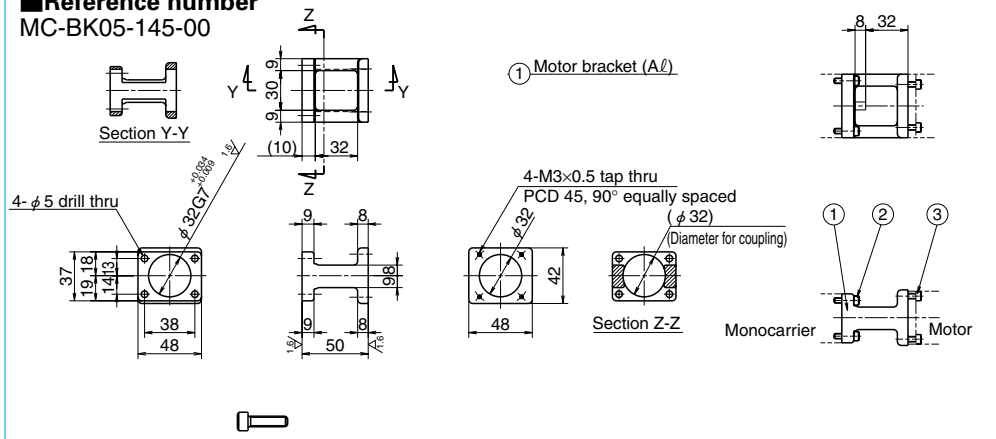

① Motor bracket (Aℓ)

② Hexagon socket head cap screw (M4, length 15)

③ Hexagon socket head cap screw (M3, length 12)

Note: Be sure to align the centerlines when installing the motor.
Be careful for the assembly orientation of bracket.

Compatible motor	
Maker	Motor models
Matsushita Electric Co., Ltd.	MSMD5A(50W), MSMD01(100W)

Motor Bracket for MCM05

Standard stock

■Reference number
MC-BK05-148-00

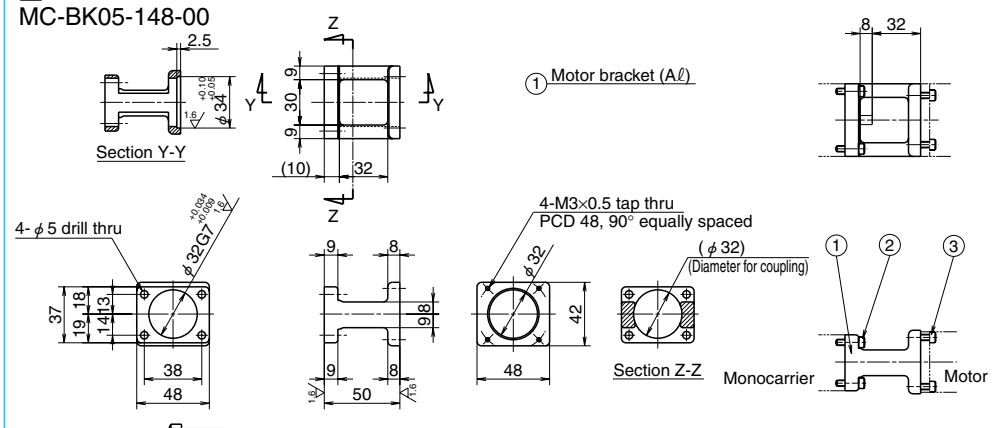

① Motor bracket (Aℓ)

② Hexagon socket head cap screw (M4, length 15)

③ Hexagon socket head cap screw (M3, length 12)

Note: Be sure to align the centerlines when installing the motor.
Be careful for the assembly orientation of bracket.

Compatible motor	
Maker	Motor models
Matsushita Electric Co., Ltd.	MAMA01(100W)

C 44

www.bergab.ru Берг АБ bergab@ya.ru Тел. (495)-228-06-21, факс (495) 223-3071

www.bergab.ru Берг АБ bergab@ya.ru Тел. (495)-228-06-21, факс (495) 223-3071

Motor Bracket for MCM05

Standard stock

■Reference number
MC-BK05-160-00

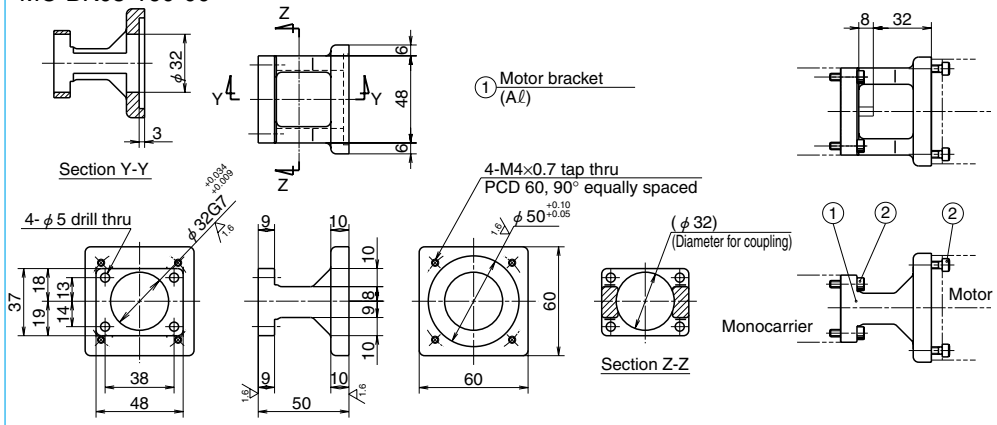

Note: Be sure to align the centerlines when installing the motor.
Be careful for the assembly orientation of bracket.

Compatible motor	
Maker	Motor models
Sanyo Denki Co., Ltd.	P50B05005(50W), P50B05010(100W), P50B05020(200W)

Motor Bracket for MCM06

Standard stock

■Reference number
MC-BK06-145-00

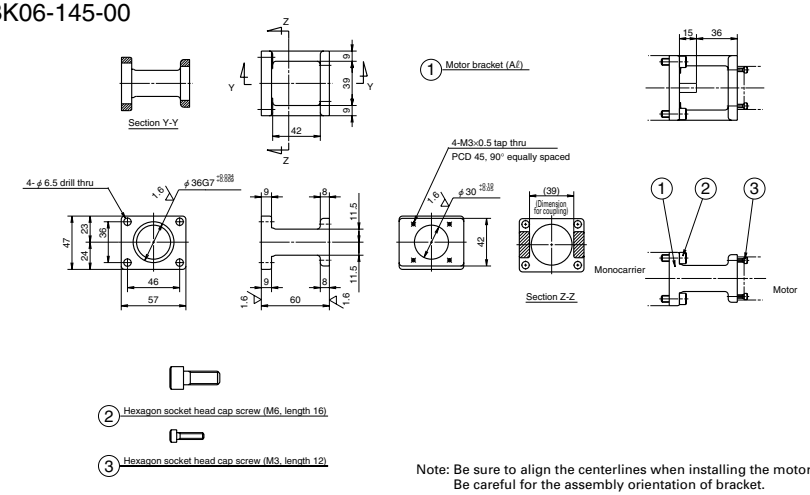

Note: Be sure to align the centerlines when installing the motor.
Be careful for the assembly orientation of bracket.

Compatible motor	
Maker	Motor models
Matsushita Electric Industrial Co., Ltd.	MSMD5A(50W), MSMD01(100W)

Motor Bracket for MCM05

Standard stock

■Reference number
MC-BK05-250-00

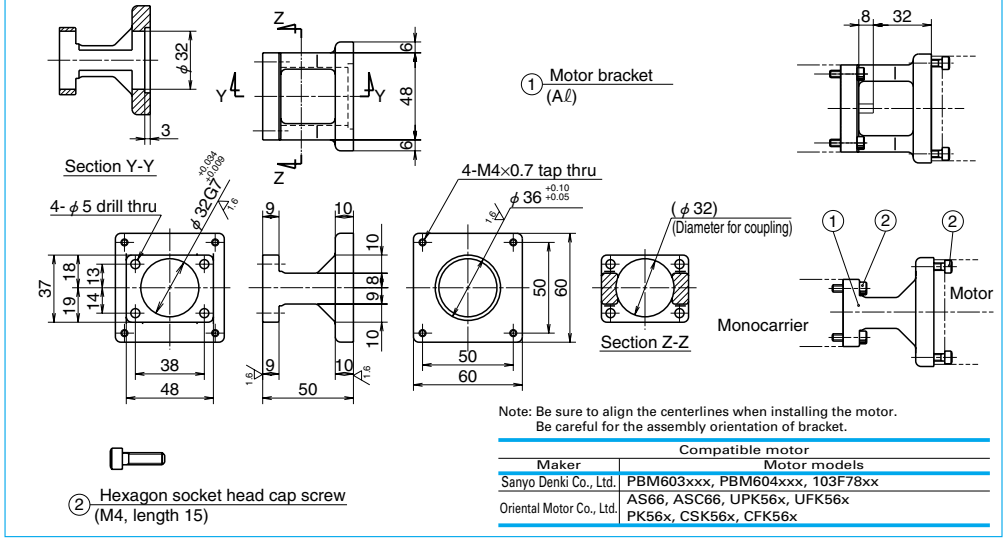

Note: Be sure to align the centerlines when installing the motor.
Be careful for the assembly orientation of bracket.

Compatible motor	
Maker	Motor models
Sanyo Denki Co., Ltd.	PBM603xxx, PBM604xxx, 103F78xx
Oriental Motor Co., Ltd.	AS66, ASC66, UPK56x, UFK56x PK56x, CSK56x, CFK56x

Motor Bracket for MCM06

Standard stock

■Reference number
MC-BK06-146-00

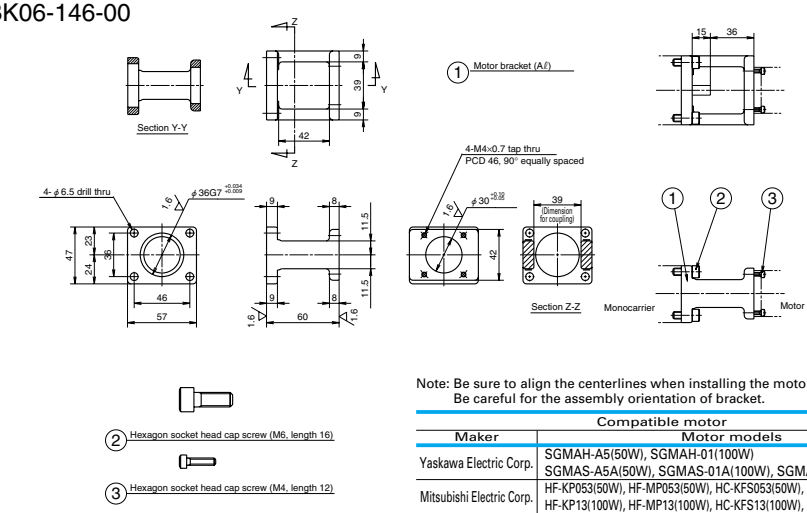

Note: Be sure to align the centerlines when installing the motor.
Be careful for the assembly orientation of bracket.

Compatible motor	
Maker	Motor models
Yaskawa Electric Corp.	SGMAH-A5(50W), SGMAH-01(100W) SGMAS-A5A(50W), SGMAS-01A(100W), SGMAS-C2A(150W)
Mitsubishi Electric Corp.	HF-KP053(50W), HF-MP053(50W), HC-KFS053(50W), HC-MFS053(50W) HF-KP13(100W), HF-MP13(100W), HC-KFS13(100W), HC-MFS13(100W)
OMRON Corp.	R88M-W03(30W), R88M-W05(50W), R88M-W10(100W)
Sanyo Denki Co., Ltd.	P30B04003(30W), P30B04005(50W), P30B04006(60W), P30B04010(100W)

C 46

www.bergab.ru Берг АБ bergab@ya.ru Тел. (495)-228-06-21, факс (495) 223-3071

www.bergab.ru Берг АБ bergab@ya.ru Тел. (495)-228-06-21, факс (495) 223-3071

Motor Bracket for MCM06

Standard stock

■Reference number
MC-BK06-148-00

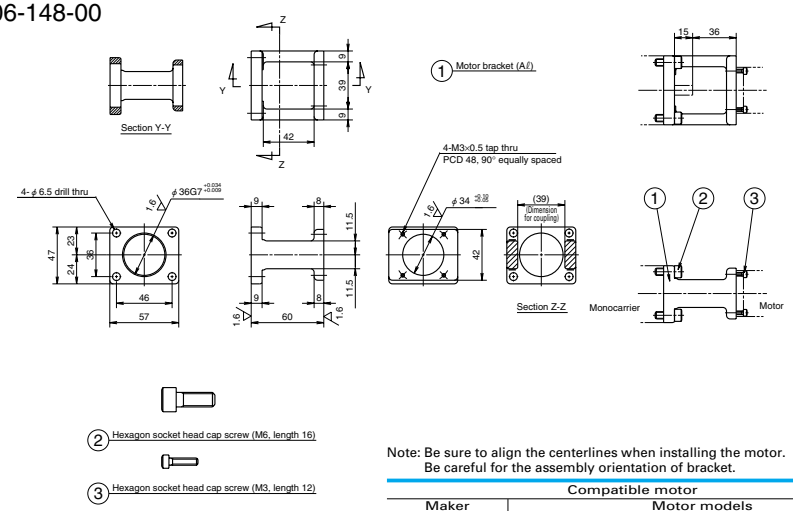

Note: Be sure to align the centerlines when installing the motor.
Be careful for the assembly orientation of bracket.

Compatible motor	
Maker	Motor models
Matsushita Electric Co., Ltd.	MAMA01(100W)
Sanyo Denki Co., Ltd.	P50B04040(60W), P50B04010(100W)

Motor Bracket for MCM06

Standard stock

■Reference number
MC-BK06-170-00

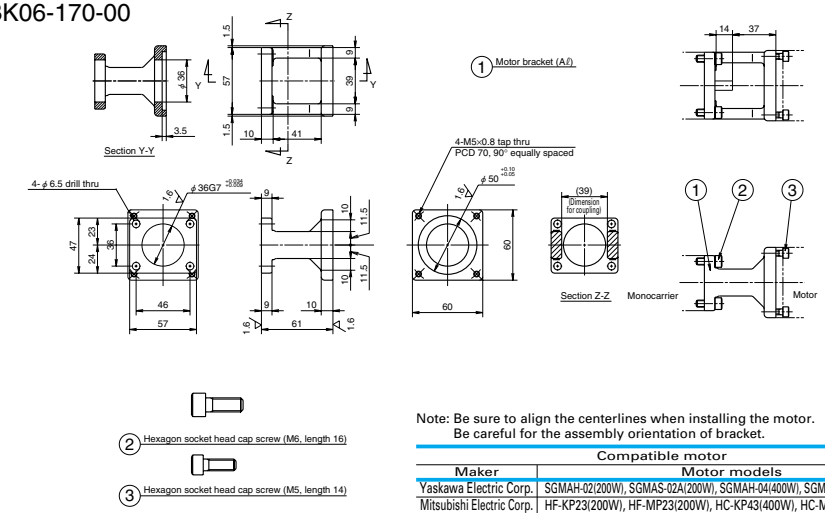

Note: Be sure to align the centerlines when installing the motor.
Be careful for the assembly orientation of bracket.

Compatible motor	
Maker	Motor models
Yaskawa Electric Corp.	SGMAH-02(200W), SGMAS-02A(200W), SGMAH-04(400W), SGMAS-04A(400W)
Mitsubishi Electric Corp.	HF-KP23(200W), HF-MP23(200W), HC-KP43(400W), HC-MP43(400W)
OMRON Corp.	R88M-W20(200W), R88M-W40(400W)
Sanyo Denki Co., Ltd.	P30B06020(200W), P30B06040(400W)

Motor Bracket for MCM06

Standard stock

■Reference number
MC-BK06-160-00

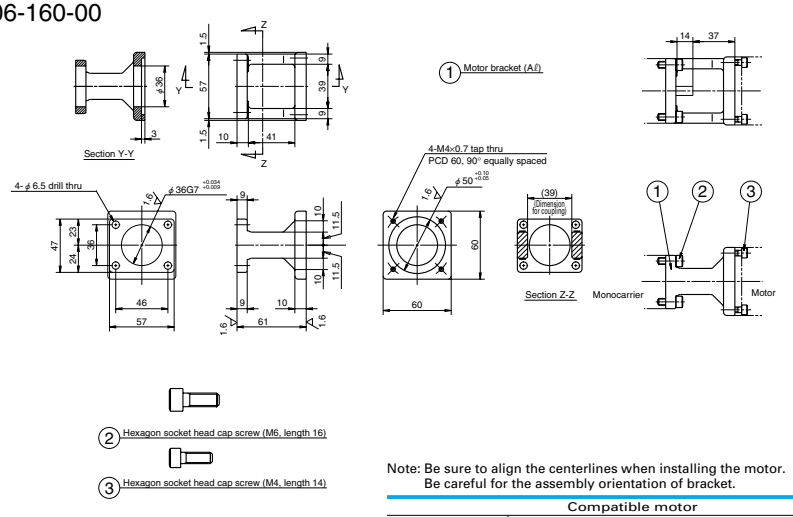

Note: Be sure to align the centerlines when installing the motor.
Be careful for the assembly orientation of bracket.

Compatible motor	
Maker	Motor models
Sanyo Denki Co., Ltd.	P50B05005(50W), P50B05010(100W), P50B05020(200W)

Motor Bracket for MCM06

Standard stock

■Reference number
MC-BK06-170-01

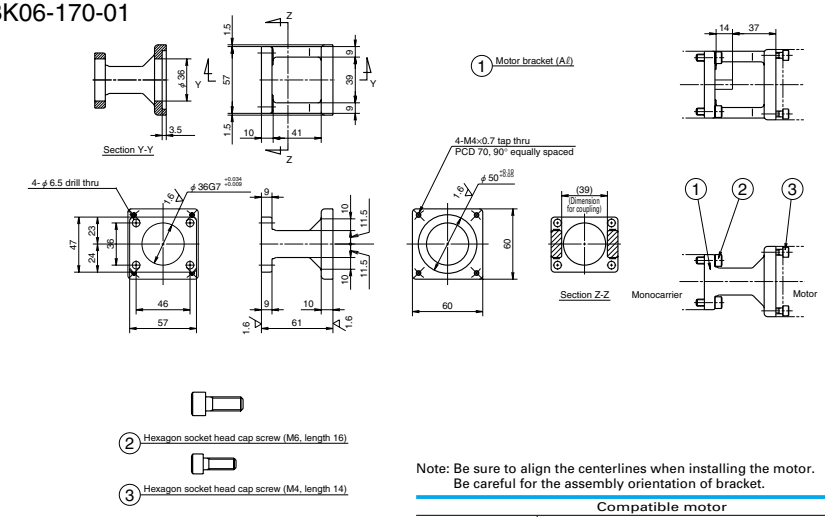

Note: Be sure to align the centerlines when installing the motor.
Be careful for the assembly orientation of bracket.

Compatible motor	
Maker	Motor models
Matsushita Electric Industrial Co., Ltd.	MSMD02(200W), MAMA02(200W), MSMD04(400W), MAMA04(400W)

C 48

www.bergab.ru Берг АБ bergab@ya.ru Тел. (495)-228-06-21, факс (495) 223-3071

www.bergab.ru Берг АБ bergab@ya.ru Тел. (495)-228-06-21, факс (495) 223-3071

Motor Bracket for MCM06

Standard stock

■Reference number
MC-BK06-250-00

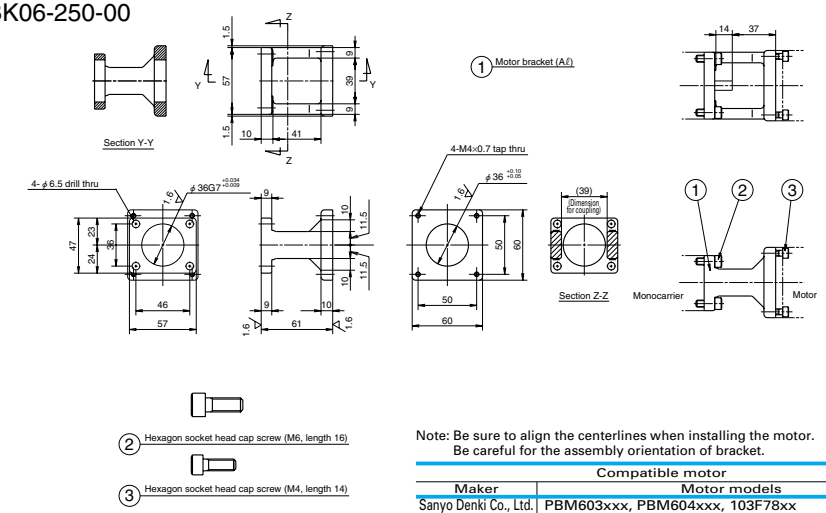

Note: Be sure to align the centerlines when installing the motor.
Be careful for the assembly orientation of bracket.

Compatible motor	
Maker	Motor models
Sanyo Denki Co., Ltd.	PBM603xxx, PBM604xxx, 103F78xx
Oriental Motor Co., Ltd.	AS66, ASC66, UPK56x, PK56x, CSK56x CFK56x, UMK56x, UFK56x

Motor Bracket for MCM08

Standard stock

■Reference number
MC-BK08-146-00

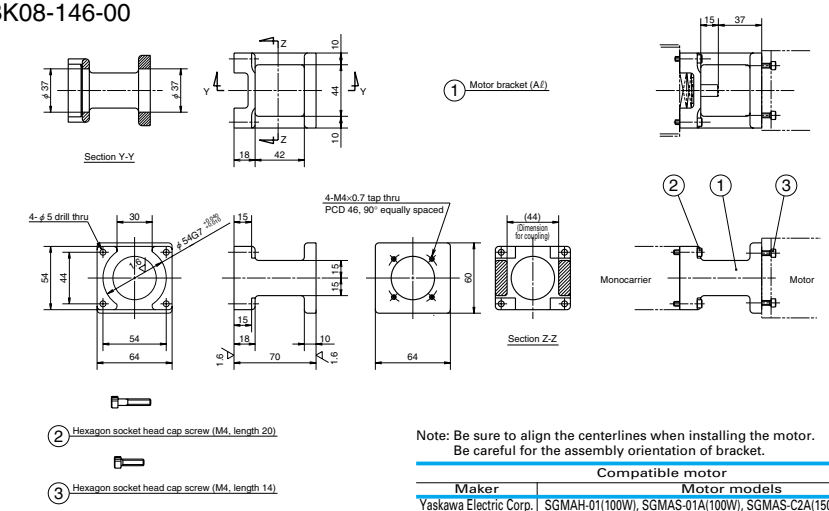

Note: Be sure to align the centerlines when installing the motor.
Be careful for the assembly orientation of bracket.

Compatible motor	
Maker	Motor models
Yaskawa Electric Corp.	SGMAH-01(100W), SGMAS-01A(100W), SGMAS-C2A(150W)
Mitsubishi Electric Corp.	HF-KP13(100W), HF-MP13(100W), HC-KFS13(100W), HC-MFS13(100W)
Sanyo Denki Co., Ltd.	P30B04003(30W), P30B04005(50W), P30B04006(60W), P30B04010(100W)

Motor Bracket for MCM08

Standard stock

■Reference number
MC-BK08-145-00

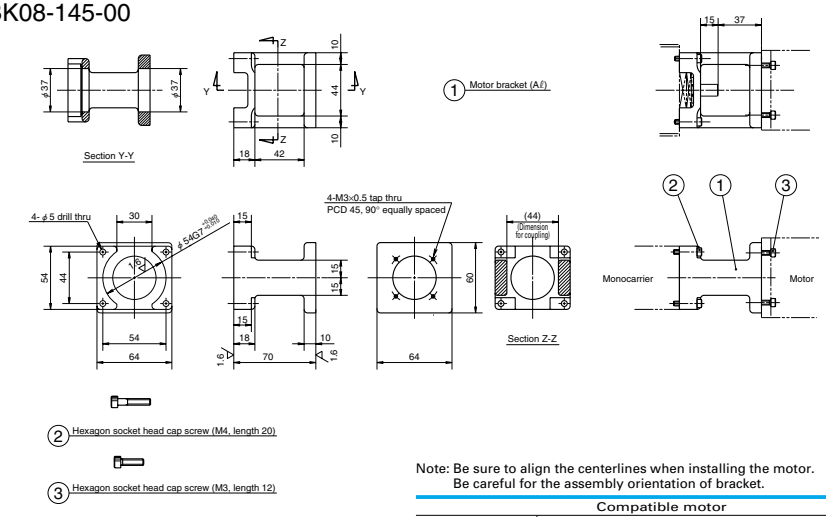

Note: Be sure to align the centerlines when installing the motor.
Be careful for the assembly orientation of bracket.

Compatible motor	
Maker	Motor models
Matsushita Electric Industrial Co., Ltd.	MSMD01(100W)

Motor Bracket for MCM08

Standard stock

■Reference number
MC-BK08-160-00

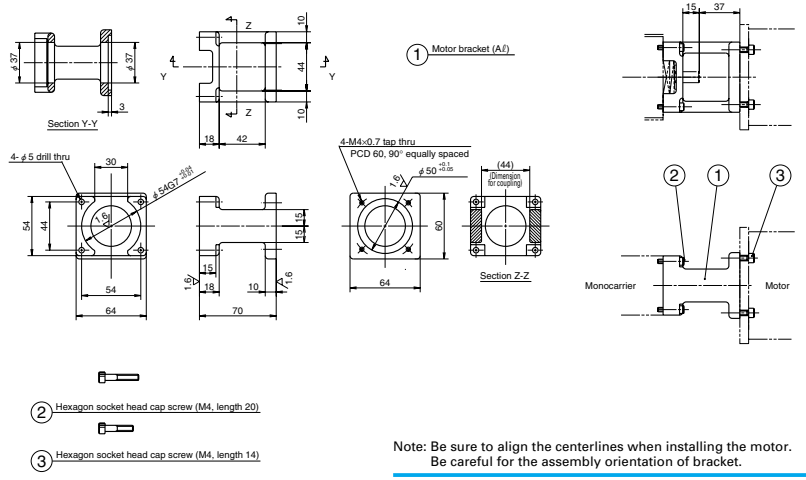

Note: Be sure to align the centerlines when installing the motor.
Be careful for the assembly orientation of bracket.

Compatible motor	
Maker	Motor models
Sanyo Denki Co., Ltd.	P50B05005(50W), P50B05010(100W), P50B05020(200W)

C 50

www.bergab.ru Берг АБ bergab@ya.ru Тел. (495)-228-06-21, факс (495) 223-3071

www.bergab.ru Берг АБ bergab@ya.ru Тел. (495)-228-06-21, факс (495) 223-3071

Motor Bracket for MCM08

Standard stock

■Reference number
MC-BK08-170-00

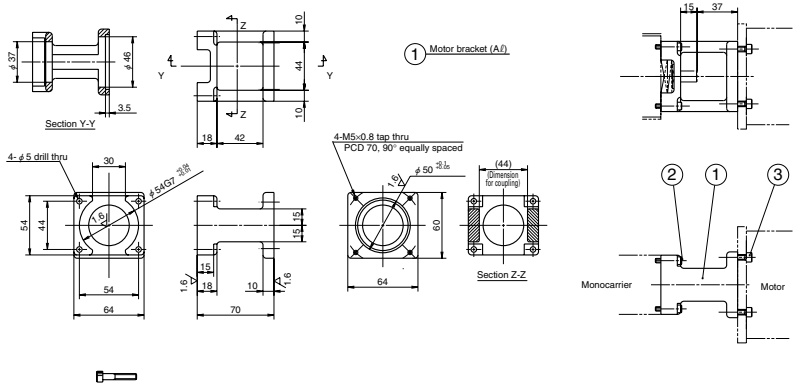

① Motor bracket (A.l.)
② Hexagon socket head cap screw (M4, length 20)
③ Hexagon socket head cap screw (M5, length 14)

Note: Be sure to align the centerlines when installing the motor.
Be careful for the assembly orientation of bracket.

Compatible motor	
Maker	Motor models
Yaskawa Electric Corp.	SGMAH-02(200W), SGMAS-02A(200W), SGMAH-04(400W), SGMAS-04A(400W)
Mitsubishi Electric Corp.	HF-KP23(200W), HF-MP23(200W), HF-KP43(400W), HF-MP43(400W)
OMRON Corp.	R88M-W20(200W), R88M-W40(400W)
Sanyo Denki Co., Ltd.	P30B06020(200W), P30B06040(400W)

Motor Bracket for MCM08

Standard stock

■Reference number
MC-BK08-250-00

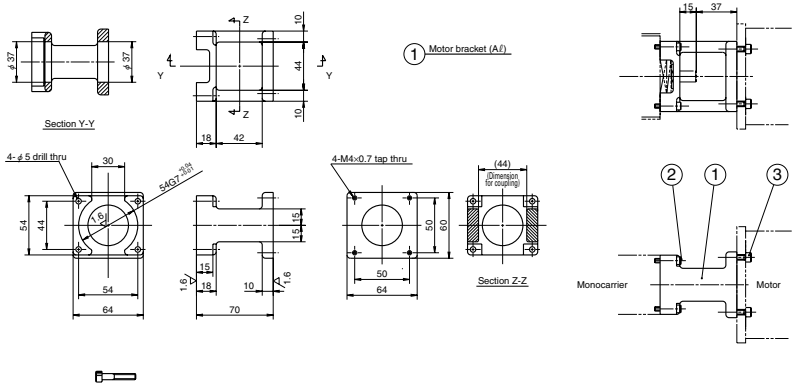

① Motor bracket (A.l.)
② Hexagon socket head cap screw (M4, length 20)
③ Hexagon socket head cap screw (M4, length 14)

Note: Be sure to align the centerlines when installing the motor.
Be careful for the assembly orientation of bracket.

Compatible motor	
Maker	Motor models
Sanyo Denki Co., Ltd.	PBM603xxx, PBM604xxx, 103F78xx
Oriental Motor Co., Ltd.	AS66, ASC66, UPK56xx, PK56xx, CSK56x CFK56x, UMK56x, UFK56x

Motor Bracket for MCM08

Standard stock

■Reference number
MC-BK08-170-01

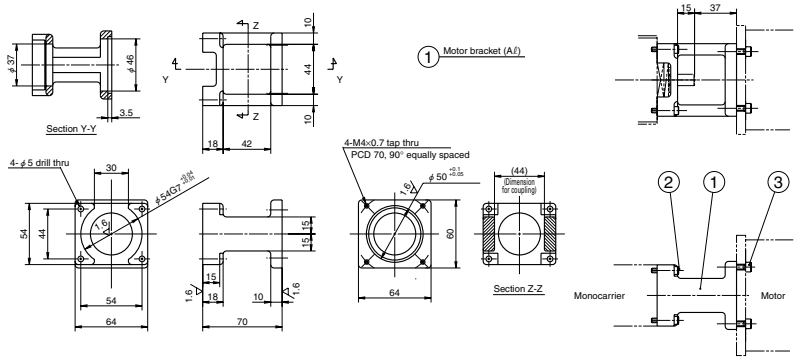

① Motor bracket (A.l.)
② Hexagon socket head cap screw (M4, length 20)
③ Hexagon socket head cap screw (M4, length 14)

Note: Be sure to align the centerlines when installing the motor.
Be careful for the assembly orientation of bracket.

Compatible motor	
Maker	Motor models
Matsushita Electric Industrial Co., Ltd.	MSMD02(200W), MAMA02(200W), MSMD04(400W), MAMA04(400WW)

Motor Bracket for MCM08

Standard stock

■Reference number
MC-BK08-190-00

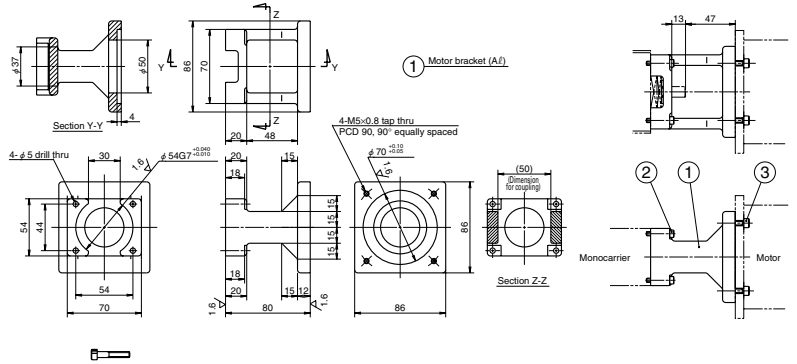

① Motor bracket (A.l.)
② Hexagon socket head cap screw (M4, length 22)
③ Hexagon socket head cap screw (M5, length 16)

Note: Be sure to align the centerlines when installing the motor.
Be careful for the assembly orientation of bracket.

Compatible motor	
Maker	Motor models
Sanyo Denki Co., Ltd.	P50B07020(200W), P50B07030(300W), P50B07040(400W)

C 52

www.bergab.ru Берг АБ bergab@ya.ru Тел. (495)-228-06-21, факс (495) 223-3071

www.bergab.ru Берг АБ bergab@ya.ru Тел. (495)-228-06-21, факс (495) 223-3071

Motor Bracket for MCM08

Standard stock

■Reference number
MC-BK08-270-00

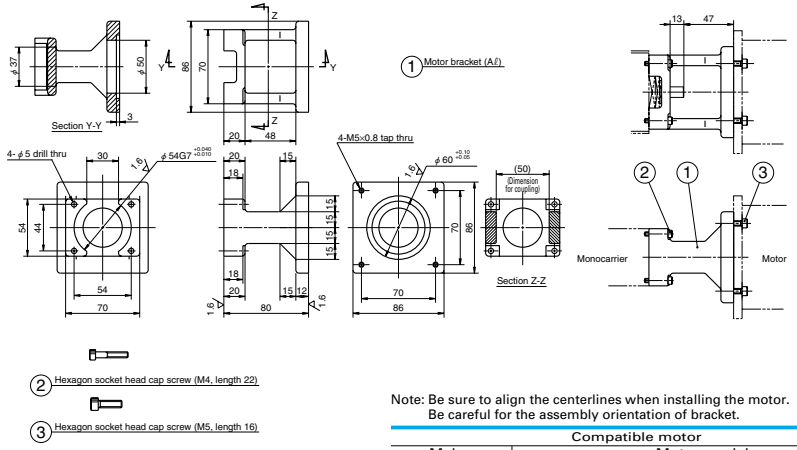

Note: Be sure to align the centerlines when installing the motor.
Be careful for the assembly orientation of bracket.

Compatible motor	
Maker	Motor models
Oriental Motor Co., Ltd.	AS98, ASC98, UPK59x, PK59x CSK59x, CFK59x, UMK59x, UFK59x
Sanyo Denki Co., Ltd.	103F85xx

Motor Bracket for MCM10

Standard stock

■Reference number
MC-BK10-170-01

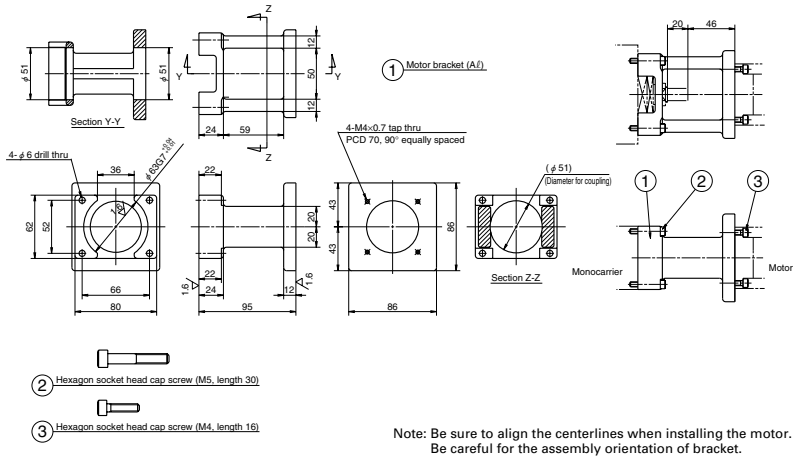

Note: Be sure to align the centerlines when installing the motor.
Be careful for the assembly orientation of bracket.

Compatible motor	
Maker	Motor models
Matsushita Electric Industrial Co., Ltd.	MSMD02(200W), MAMA02(200W), MSMD04(400W), MAMA04(400W)

Motor Bracket for MCM10

Standard stock

■Reference number
MC-BK10-170-00

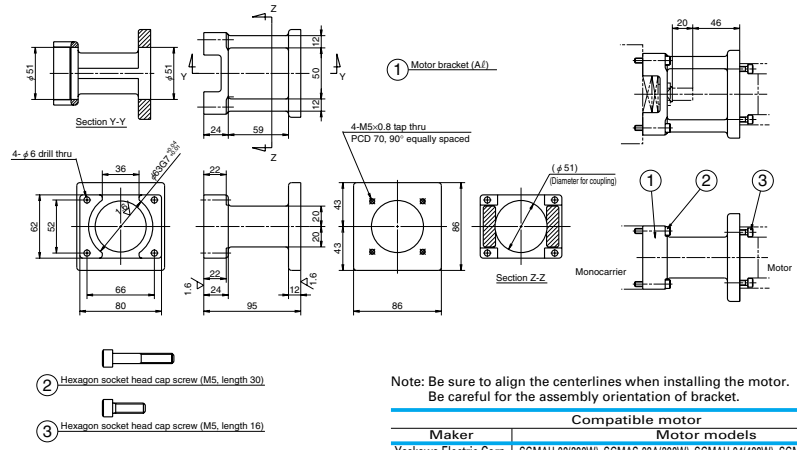

Note: Be sure to align the centerlines when installing the motor.
Be careful for the assembly orientation of bracket.

Compatible motor	
Maker	Motor models
Yaskawa Electric Corp.	SGMAH-02(200W), SGMAS-02A(200W), SGMAH-04(400W), SGMAS-04A(400W)
Mitsubishi Electric Corp.	HF-KP23(200W), HF-MP23(200W), HF-KP43(400W), HF-MP43(400W)
OMRON Corp.	R88M-W20(200W), R88M-W40(400W)
Sanyo Denki Co., Ltd.	P30B06020(200W), P30B06040(400W)

Motor Bracket for MCM10

Standard stock

■Reference number
MC-BK10-190-00

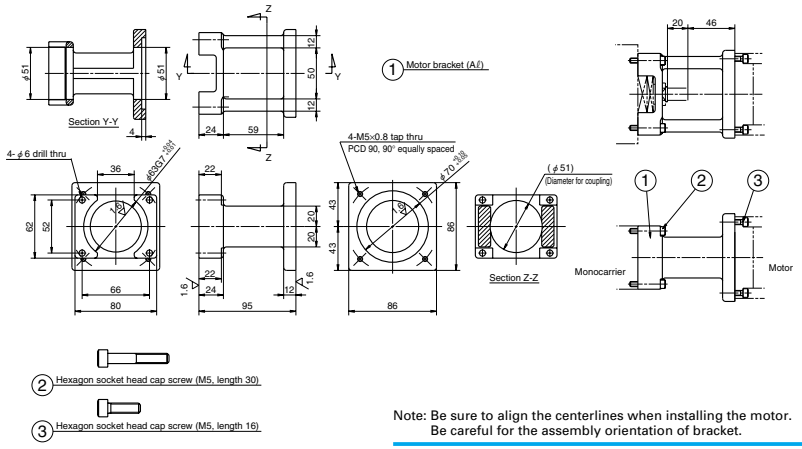

Note: Be sure to align the centerlines when installing the motor.
Be careful for the assembly orientation of bracket.

Compatible motor	
Maker	Motor models
Matsushita Electric Industrial Co., Ltd.	MSMD08(750W), MAMA08(750W)
Sanyo Denki Co., Ltd.	P50B07020(200W), P50B07030(300W), P50B07040(400W)

www.bergab.ru Берг АБ bergab@ya.ru Тел. (495)-228-06-21, факс (495) 223-3071

www.bergab.ru Берг АБ bergab@ya.ru Тел. (495)-228-06-21, факс (495) 223-3071

Standard stock

Motor Bracket for MCM10

■Reference number
MC-BK10-270-00

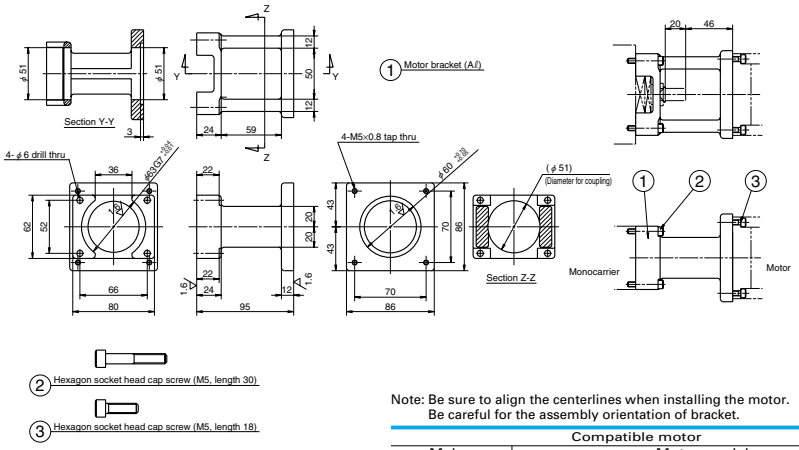

Note: Be sure to align the centerlines when installing the motor.
Be careful for the assembly orientation of bracket.

Compatible motor	
Maker	Motor models
Sanyo Denki Co., Ltd.	103F85xx
Oriental Motor Co., Ltd.	AS98, ASC98, UPK59x, PK59x, CSK59x CFK59x, UMK59x, UFK59x

Availability Motor Table of Motor Bracket for MCM Series

Table 2-5

Nominal size	Reference number code	Motor bracket reference number	Motor manufacturer	Stepping motor model number	Wattage of AC servo motor 10	20	30	50	60	100	150	200	300	400	750
MCM02	1	MC-BK02-128-00	Yaskawa Electric Corp.		SGMM-A1	SGMM-A2									
	2	MC-BK02-133-00	Mitsubishi Electric Corp.		HC-AQ013	HC-AQ023									
	3	MC-BK02-223-00	Oriental Motor Co., Ltd.	PMU33/35 (5-phase) PMC33/35 (5-phase)											
MCM03	1	MC-BK03-146-00	Yaskawa Electric Corp.				SGMAH-A3	SGMAH-A5 SGMAS-A5A		SGMAH-01 SGMAS-01A					
			Mitsubishi Electric Corp.					HF-KP053 HF-MP053 HC-KFS053 HC-MFS053		HF-KP13 HF-MP13 HC-KFS13 HC-MFS13					
			OMRON Corp.				R88M-W03	R88M-W05		R88M-W10					
			Sanyo Denki Co., Ltd.				P30B04003	P30B04005	P30B04006	P30B04010					
	2	MC-BK03-148-01	Sanyo Denki Co., Ltd.						P50B04040	P50B04010					
	3	MC-BK03-231-00	Sanyo Denki Co., Ltd.	PBM423xxx											
			Sanyo Denki Co., Ltd.	103F55xx											
			Oriental Motor Co., Ltd.	AS46, ASC46 UPK54x, PK54x CSK54x, CFK54x UMK24x, CSK24x PK24x											
MCM05	1	MC-BK05-145-00	Matsushita Electric Industrial Co., Ltd.					MSMD5A		MSMD01					
	2	MC-BK05-146-00	Yaskawa Electric Corp.				SGMAH-A3	SGMAH-A5 SGMAS-A5A		SGMAH-01 SGMAS-01A					
			Mitsubishi Electric Corp.					HF-KP053 HF-MP053 HC-KFS053 HC-MFS053		HF-KP13 HF-MP13 HC-KFS13 HC-MFS13					
			OMRON Corp.				R88M-W03	R88M-W05		R88M-W10					
			Sanyo Denki Co., Ltd.				P30B04003	P30B04005	P30B04006	P30B04010					
	3	MC-BK05-148-00	Matsushita Electric Industrial Co., Ltd.							MAMA01					
	4	MC-BK05-160-00	Sanyo Denki Co., Ltd.					P50B05005		P50B05010		P50B05020			
	5	MC-BK05-250-00	Sanyo Denki Co., Ltd.	PBM603xx, PBM604xx											
			Sanyo Denki Co., Ltd.	103F78xx											
			Oriental Motor Co., Ltd.	AS66, ASC66 UPK56x, UFK56x PK56x, CSK56x, CFK56x											
MCM06	1	MC-BK06-145-00	Matsushita Electric Industrial Co., Ltd.					MSMD5A		MSMD01					
	2	MC-BK06-146-00	Yaskawa Electric Corp.					SGMAH-A5 SGMAS-A5A		SGMAH-01 SGMAS-01A	SGMAS-C2A				
			Mitsubishi Electric Corp.					HF-KP053 HF-MP053 HC-KFS053 HC-MFS053		HF-KP13 HF-MP13 HC-KFS13 HC-MFS13					
			OMRON Corp.				R88M-W03	R88M-W05		R88M-W10					
			Sanyo Denki Co., Ltd.				P30B04003	P30B04005	P30B04006	P30B04010					
	3	MC-BK06-148-00	Sanyo Denki Co., Ltd.						P50B04040	P50B04010					
			Matsushita Electric Industrial Co., Ltd.							MAMA01					
	4	MC-BK06-160-00	Sanyo Denki Co., Ltd.					P50B05005		P50B05010		P50B05020			
	5	MC-BK06-170-00	Yaskawa Electric Corp.									SGMAH-02 SGMAS-02A		SGMAH-04 SGMAS-04A	
			Mitsubishi Electric Corp.									HF-KP23 HF-MP23		HF-KP43 HF-MP43	
			OMRON Corp.									R88M-W20		R88M-W40	
			Sanyo Denki Co., Ltd.									P30B06020		P30B06040	
	6	MC-BK06-170-01	Matsushita Electric Industrial Co., Ltd.									MSMD02 MAMA02		MSMD04 MAMA04	
	7	MC-BK06-250-00	Sanyo Denki Co., Ltd.	PBM603xxx, PBM604xxx											
			Sanyo Denki Co., Ltd.	103F78xx											
			Oriental Motor Co., Ltd.	AS66, ASC66 UPK56x, PK56x CSK56x, CFK56x UMK56x, UFK56x											
MCM08	1	MC-BK08-145-00	Matsushita Electric Industrial Co., Ltd.							MSMD01					
	2	MC-BK08-146-00	Yaskawa Electric Corp.							SGMAH-01 SGMAS-01A	SGMAS-C2A				
			Mitsubishi Electric Corp.							HF-KP13 HF-MP13 HC-KFS13 HC-MFS13					
			Sanyo Denki Co., Ltd.				P30B04003	P30B04005	P30B04006	P30B04010					
	3	MC-BK08-160-00	Sanyo Denki Co., Ltd.					P50B05005		P50B05010		P50B05020			
	4	MC-BK08-170-00	Yaskawa Electric Corp.									SGMAH-02 SGMAS-02A		SGMAH-04 SGMAS-04A	
			Mitsubishi Electric Corp.									HF-KP23 HF-MP23		HF-KP43 HF-MP43	
			OMRON Corp.									R88M-W20		R88M-W40	
			Sanyo Denki Co., Ltd.									P30B06020		P30B06040	
	5	MC-BK08-170-01	Matsushita Electric Industrial Co., Ltd.									MSMD02 MAMA02		MSMD04 MAMA04	
	6	MC-BK08-190-00	Sanyo Denki Co., Ltd.									P50B07020	P50B07030	P50B07040	
	7	MC-BK08-250-00	Sanyo Denki Co., Ltd.	PBM603xxx, PBM604xxx											
			Sanyo Denki Co., Ltd.	103F78xx											
			Oriental Motor Co., Ltd.	AS66, ASC66 UPK56x, PK56x CSK56x, CFK56x UMK56x, UFK56x											
	8	MC-BK08-270-00	Sanyo Denki Co., Ltd.	103F85xx											
			Oriental Motor Co., Ltd.	AS98, ASC98 UPK59x, PK59x CSK59x, CFK59x UMK59x, UFK59x											
MCM10	1	MC-BK10-170-00	Yaskawa Electric Corp.									SGMAH-02 SGMAS-02A		SGMAH-04 SGMAS-04A	
			Mitsubishi Electric Corp.									HF-KP23 HF-MP23		HF-KP43 HF-MP43	
			OMRON Corp.									R88M-W20		R88M-W40	
			Sanyo Denki Co., Ltd.									P30B06020		P30B06040	
	2	MC-BK10-170-01	Matsushita Electric Industrial Co., Ltd.									MSMD02 MAMA02		MSMD04 MAMA04	
	3	MC-BK10-190-00	Matsushita Electric Industrial Co., Ltd.												MSMD08 MAMA08
			Sanyo Denki Co., Ltd.									P50B07020	P50B07030	P50B07040	
	4	MC-BK10-270-00	Sanyo Denki Co., Ltd.	103F85xx											
			Oriental Motor Co., Ltd.	AS98, ASC98 UPK59x, PK59x CSK59x, CFK59x UMK59x, UFK59x											

C 56

www.bergab.ru Берг АБ bergab@ya.ru Тел. (495)-228-06-21, факс (495) 223-3071

www.bergab.ru Берг АБ bergab@ya.ru Тел. (495)-228-06-21, факс (495) 223-3071

1 MCH Series Reference Number Coding C59

2 MCH Series dimension table of standard prodacts

MCL06 C60

MCH06 C61

MCH09 C63

MCH10 C65

3 MCH Series Option Part

3. 1 Sensor Unit C67

3. 2 Cover Unit C69

3. 3 Intermediate Plate For Motor C71

MCH Series

www.bergab.ru Берг АБ bergab@ya.ru Тел. (495)-228-06-21, факс (495) 223-3071

www.bergab.ru Берг АБ bergab@ya.ru Тел. (495)-228-06-21, факс (495) 223-3071

C-Ⅲ MCH Series

C-Ⅲ-1 MCH Series Reference Number Coding

[Body]

Reference number : MC H 06 040 H 10 K (B0) ※1

- Mono carrier
- H Type: MCH Series
- L Type: MCH Series low profile rail (only for 06 size)
- Nominal size (rail width, Unit: 10mm)
- Stroke (Unit: 10mm)
- Accuracy grade (H: High grade, P: Precision grade).
- Special specification
- Grease specification: B (LG2)(See page C18)
- Slider specification K: Single slider (See page C10) D: Double slider
- Ball screw lead (mm)

※1 : These two code fields shall be added when non-standard grease is used. The coding of an MCH Monocarrier with standard grease shall have 12 characters as shown above.

[With Option part]

Reference number : MC S 06 040 H 10 K 0 0 K 0 0 0

- S : With MCH optional components
- R : With MCL optional components
- NSK management number
- Sensor unit
- Cover unit
- Intermediate plate for motor bracket

Note : Optional components are available separately.

Table 3-1 Sensor unit (See page C67~68)

Reference number code	Specification	Reference number
0	N/A	—
1	Proximity swith (b-contact 3peices)	MC—SRHxx—10
2	Proximity swith (a-contact 3pieses)	MC—SRHxx—11
3	Proximity swith (a-contact 1pieses, b-contaact 2pieces)	MC—SRHxx—12
4	Photo sensor 3pieces	MC—SRHxx—13

Note xx: Reference number

Table 3-2 Cover unit (See page C69~70)

Reference number code	Specification	Reference number
0	N/A	—
1	For single slider	MC—HVxxxxx—00
	For double slider	MC—HVxxxxxD00

Note xxxxx: Reference number and stroke number

Table 3-3 Intermediate plate for motor bracket (See page C71~74)

Reference number code	Type		
	MCH06 (MCL06)	MCH09	MCH10
0	N/A	N/A	N/A
1	MC-BKH06-145-00	MC-BKH09-145-00	MC-BKH10-170-00
2	MC-BKH06-146-00	MC-BKH09-146-00	MC-BKH10-170-01
3	MC-BKH06-231-00	MC-BKH09-170-00	MC-BKH10-190-00
4	MC-BKH06-250-00	MC-BKH09-170-01	MC-BKH10-190-01
5	—	MC-BKH09-231-00	MC-BKH10-250-00
6	—	MC-BKH09-250-00	MC-BKH10-270-00

C-Ⅲ-2 MCH Series dimension table of standard prodacts

MCL06

Accuracy grade: High grade (H)

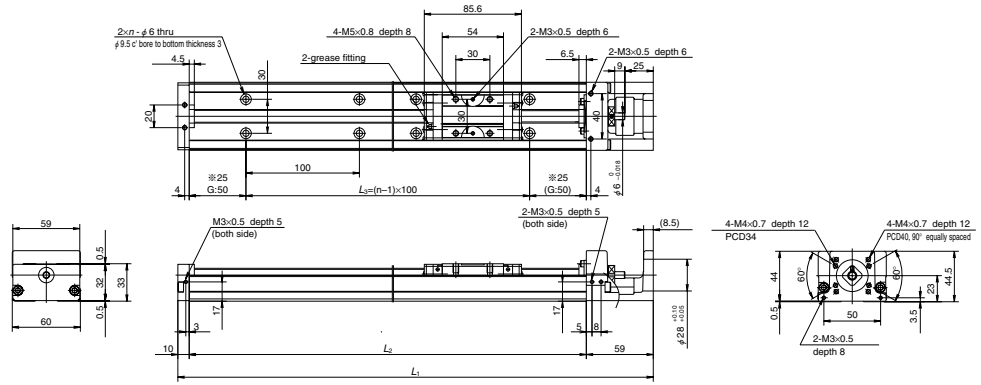

- ●The rail of MCL 06 is made lighter than that of MCH 06 by lowering the rail height. The weight ratio between the MCH 06 and MCL 06 is 5 to 4.
- ●Double slider specification is also available for the MCL 06.
- ●Combinations of stroke and ball screw lead of the MCL 06 are the same as those of the MCH 06.

Dimension of MCL06 (Single slider)

Reference number	Nominal stroke (mm)	Stroke limit(mm) (K1 is not equipped)	Ball screw lead (mm)	Body length (mm) L_1	L_2	L_3	n	Inertia $\times10^{-6}$(kg · m²)	Mass (kg)
★※MCL06005H05K	50	53	5	219	150	100	2	2.38	1.0
★※MCL06005H10K		(65)	10					3.45	
★ MCL06010H05K	100	103	5	269	200	100	2	3.17	1.3
★ MCL06010H10K		(115)	10					4.12	
★ MCL06020H05K	200	203	5	369	300	200	3	4.51	1.9
★ MCL06020H10K		(215)	10					5.46	
★ MCL06030H10K	300	303	10	469	400	300	4	6.80	2.6
★ MCL06030H20K		(315)	20					10.6	
★ MCL06040H10K	400	403	10	569	500	400	5	8.13	3.2
★ MCL06040H20K		(415)	20					11.9	
★ MCL06050H10K	500	503	10	669	600	500	6	9.47	3.9
★ MCL06050H20K		(515)	20					13.3	

Dimension of G is 25 instead of 50 for those marked with ※.

Items not marked are available from standard stock.
Items marked with ★ are designated as "quick delivery item" upon request.

Monocarrier dynamic torque specification (N · cm)		
Ball screw lead (mm)	5	1.0～4.8
	10	1.1～5.8
	20	1.6～7.9

1. Frictional resistance of NSK K1 is included in the dynamic torque in the table.
2. Grease is packed into ball screw, linear guide parts and support unit.
3. Consult NSK for life estimates under large moment loads.

Basic load rating

Lead ℓ (mm)	Shaft dia d (mm)	Basic dynamic load rating (N) Ball screw C_a	linear guides C	Support unit C_a	Rated running distance L_a (km)	Basic static load rating (N) Ball screw C_{0a}	Linear guides C_0	Support unit Load limit (N)
5	φ12	3000 (High grade) 3760 (Precision)	22800	4400	5	5410 (High grade) 6310 (Precision)	10900	1450
10		1930 (High grade) 2260 (Precision)	18100		10	3160 (High grade) 3780 (Precision)		
20		1930 (High grade) 2260 (Precision)	14400		20	3160 (High grade) 3780 (Precision)		

Basic static moment load of linear guide

Slider	Basic static moment load (N · m) RollingM_{RO}	PitchingM_{PO}	YawingM_{YO}
Single	335	133	133

C 60

www.bergab.ru Берг АБ bergab@ya.ru Тел. (495)-228-06-21, факс (495) 223-3071

MCH06

Accuracy grade: High grade (H)

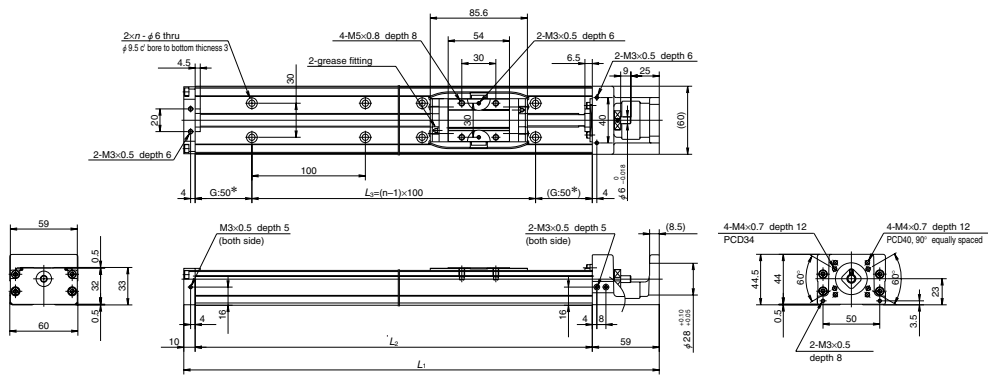

Dimension of MCH06 (Single slider)

Reference number	Nominal stroke (mm)	Stroke limit(mm) (K1 is not equipped)	Ball screw lead (mm)	Body length (mm) L_1	L_2	L_3	n	Inertia $\times10^{-6}$(kg · m²)	Mass (kg)
※MCH06005H05K	50	53	5	219	150	100	2	2.38	1.8
※MCH06005H10K		(65)	10					3.45	
MCH06010H05K	100	103	5	269	200	100	2	3.17	2.2
MCH06010H10K		(115)	10					4.12	
MCH06020H05K	200	203	5	369	300	200	3	4.51	3.0
MCH06020H10K		(215)	10					5.46	
MCH06030H10K	300	303	10	469	400	300	4	6.80	3.7
MCH06030H20K		(315)	20					10.6	
MCH06040H10K	400	403	10	569	500	400	5	8.13	4.5
MCH06040H20K		(415)	20					11.9	
MCH06050H10K	500	503	10	669	600	500	6	9.47	5.2
MCH06050H20K		(515)	20					13.3	

Dimension of G is 25 instead of 50 for those marked with ※.

Items not marked are available from standard stock.
Items marked with ★ are designated as "quick delivery item" upon request.

Monocarrier dynamic torque specification (N · cm)		
Ball screw lead (mm)	5	1.0～4.8
	10	1.1～5.8
	20	1.6～7.9

1. Frictional resistance of NSK K1 is included in the dynamic torque in the table.
2. Grease is packed into ball screw, linear guide parts and support unit.
3. Consult NSK for life estimates under large moment loads.

Basic load rating

Lead ℓ (mm)	Shaft dia d (mm)	Basic dynamic load rating (N) Ball screw C_a	linear guides C	Support unit C_a	Rated running distance L_a (km)	Basic static load rating (N) Ball screw C_{0a}	Linear guides C_0	Support unit Load limit (N)
5	ϕ12	3000 (High grade) 3760 (Precision)	22800	4400	5	5410 (High grade) 6310 (Precision)	16300	1450
10		1930 (High grade) 2260 (Precision)	18100		10	3160 (High grade) 3780 (Precision)		
20		1930 (High grade) 2260 (Precision)	14400		20	3160 (High grade) 3780 (Precision)		

Basic static moment load of linear guide

Slider	Basic static moment load (N · m) RollingM$_{RO}$	PitchingM$_{PO}$	YawingM$_{YO}$
Single	335	133	133

MCH06 (Double slider)

Accuracy grade: High grade (H)

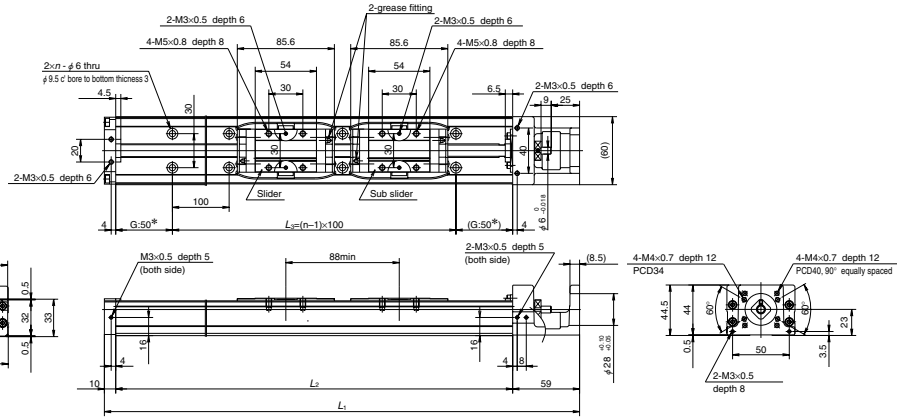

Dimension of MCH06 (Double slider)

Reference number	Nominal stroke (mm)	Stroke limit(mm) (K1 is not equipped)	Ball screw lead (mm)	Body length (mm) L_1	L_2	L_3	n	Inertia $\times10^{-6}$(kg · m²)	Mass (kg)
★MCH06010H05D	100	115	5	369	300	200	3	4.82	3.5
★MCH06010H10D		(139)	10					6.72	
★MCH06020H05D	200	215	5	469	400	300	4	8.06	4.2
★MCH06020H10D		(239)	10					15.7	
★MCH06030H05D	300	315	5	569	500	400	5	9.40	5.0
★MCH06030H10D		(339)	10					17.0	
★MCH06040H10D	400	415	10	669	600	500	6	10.7	5.7
★MCH06040H20D		(439)	20					18.3	

Items not marked are available from standard stock.
Items marked with ★ are designated as "quick delivery item" upon request.

Monocarrier dynamic torque specification (N · cm)		
Ball screw lead (mm)	5	1.2～5.2
	10	1.5～9.6
	20	2.3～11.8

1. Frictional resistance of NSK K1 is included in the dynamic torque in the table.
2. Grease is packed into ball screw, linear guide parts and support unit.
3. Consult NSK for life estimates under large moment loads.

Basic load rating

Lead ℓ (mm)	Shaft dia d (mm)	Basic dynamic load rating (N) Ball screw C_a	linear guides C	Support unit C_a	Rated running distance L_a (km)	Basic static load rating (N) Ball screw C_{0a}	Linear guides C_0	Support unit Load limit (N)
5	ϕ12	3000 (High grade) 3760 (Precision)	22800	4400	5	5410 (High grade) 6310 (Precision)	16300	1450
10		1930 (High grade) 2260 (Precision)	18100		10	3160 (High grade) 3780 (Precision)		
20		1930 (High grade) 2260 (Precision)	14400		20	3160 (High grade) 3780 (Precision)		

Basic static moment load of linear guide

Slider	Basic static moment load (N · m) RollingM$_{RO}$	PitchingM$_{PO}$	YawingM$_{YO}$
Double	770	730	730

www.bergab.ru Берг АБ bergab@ya.ru Тел. (495)-228-06-21, факс (495) 223-3071

www.bergab.ru Берг АБ bergab@ya.ru Тел. (495)-228-06-21, факс (495) 223-3071

MCH09

Accuracy grade: High grade (H)

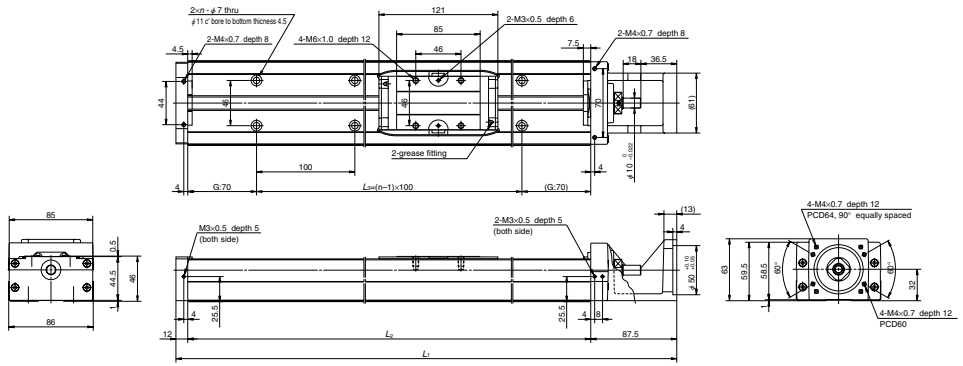

Dimension of MCH09 (Single slider)

Reference number	Nominal stroke (mm)	Stroke limit(mm) (K1 is not equipped)	Ball screw lead (mm)	Body length (mm) L_1	L_2	L_3	n	Inertia $\times10^{-6}$(kg · m^2)	Mass (kg)
MCH09020H05K	200	207	5	439.5	340	200	3	12.4	6.5
MCH09020H10K		(221)	10					13.9	
MCH09030H05K	300	307	5	539.5	440	300	4	15.6	8.1
MCH09030H10K		(321)	10					17.1	
MCH09040H05K	400	407	5	639.5	540	400	5	18.8	9.7
MCH09040H10K		(421)	10					20.3	
MCH09050H10K	500	507	10	739.5	640	500	6	23.5	11
MCH09050H20K		(521)	20					29.6	
MCH09060H10K	600	607	10	839.5	740	600	7	26.7	13
MCH09060H20K		(621)	20					32.8	
MCH09080H10K	800	807	10	1 039.5	940	800	9	33.2	16
MCH09080H20K		(821)	20					39.2	

Items not marked are available from standard stock.
Items marked with ★ are designated as "quick delivery item" upon request.

Monocarrier dynamic torque specification (N · cm)		
Ball screw lead (mm)	5	1.0～5.9
	10	2.0～7.8
	20	2.0～10.8

1. Frictional resistance of NSK K1 is included in the dynamic torque in the table.
2. Grease is packed into ball screw, linear guide parts and support unit.
3. Consult NSK for life estimates under large moment loads.

Basic load rating

Lead ℓ (mm)	Shaft dia d (mm)	Basic dynamic load rating (N) Ball screw C_a	linear guides C	Support unit C_a	Rated running distance L_a (km)	Basic static load rating (N) Ball screw C_{0a}	Linear guides C_0	Support unit Load limit (N)
5	ϕ15	6820 (High grade) 7100 (Precision)	40600	7100	5	13200 (High grade) 13000 (Precision)	30500	3040
10		5110 (High grade) 7060 (Precision)	32200		10	9290 (High grade) 12700 (Precision)		
20		3290 (High grade) 4560 (Precision)	25500		20	5620 (High grade) 7750 (Precision)		

Basic static moment load of linear guide

Slider	Basic static moment load (N · m) RollingM$_{RO}$	PitchingM$_{PO}$	YawingM$_{YO}$
Single	890	385	385

MCH09 (Double slider)

Accuracy grade: High grade (H)

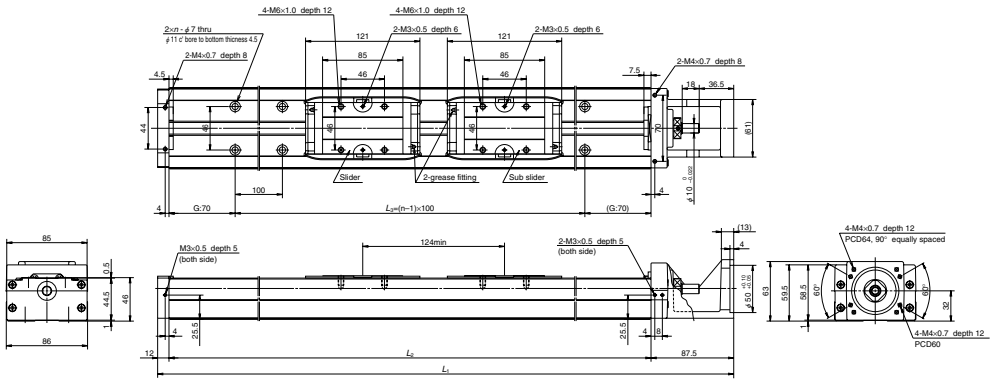

Dimension of MCH09 (Double slider)

Reference number	Nominal stroke (mm)	Stroke limit(mm) (K1 is not equipped)	Ball screw lead (mm)	Body length (mm) L_1	L_2	L_3	n	Inertia $\times10^{-6}$(kg · m^2)	Mass (kg)
★MCH09015H05D	150	183	5	539.5	440	300	4	16.1	8.9
★MCH09015H10D		(211)	10					19.2	
★MCH09025H05D	250	283	5	639.5	540	400	5	19.3	11
★MCH09025H10D		(311)	10					22.4	
★MCH09035H05D	350	383	5	739.5	640	500	6	22.5	12
★MCH09035H10D		(411)	10					25.6	
★MCH09045H10D	450	483	10	839.5	740	600	7	28.8	14
★MCH09045H20D		(511)	20					40.9	
★MCH09065H10D	650	683	10	1 039.5	940	800	9	35.2	17
★MCH09065H20D		(711)	20					47.3	

Items not marked are available from standard stock.
Items marked with ★ are designated as "quick delivery item" upon request.

Monocarrier dynamic torque specification (N · cm)		
Ball screw lead (mm)	5	1.5～7.0
	10	2.5～10.8
	20	4.0～17.2

1. Frictional resistance of NSK K1 is included in the dynamic torque in the table.
2. Grease is packed into ball screw, linear guide parts and support unit.
3. Consult NSK for life estimates under large moment loads.

Basic load rating

Lead ℓ (mm)	Shaft dia d (mm)	Basic dynamic load rating (N) Ball screw C_a	linear guides C	Support unit C_a	Rated running distance L_a (km)	Basic static load rating (N) Ball screw C_{0a}	Linear guides C_0	Support unit Load limit (N)
5	ϕ15	6820 (High grade) 7100 (Precision)	40600	7100	5	13200 (High grade) 13000 (Precision)	30500	3040
10		5110 (High grade) 7060 (Precision)	32200		10	9290 (High grade) 12700 (Precision)		
20		3290 (High grade) 4560 (Precision)	25500		20	5620 (High grade) 7750 (Precision)		

Basic static moment load of linear guide

Slider	Basic static moment load (N · m) RollingM$_{RO}$	PitchingM$_{PO}$	YawingM$_{YO}$
Double	1780	2070	2070

www.bergab.ru Берг АБ bergab@ya.ru Тел. (495)-228-06-21, факс (495) 223-3071

www.bergab.ru Берг АБ bergab@ya.ru Тел. (495)-228-06-21, факс (495) 223-3071

MCH10

Accuracy grade: High grade (H)

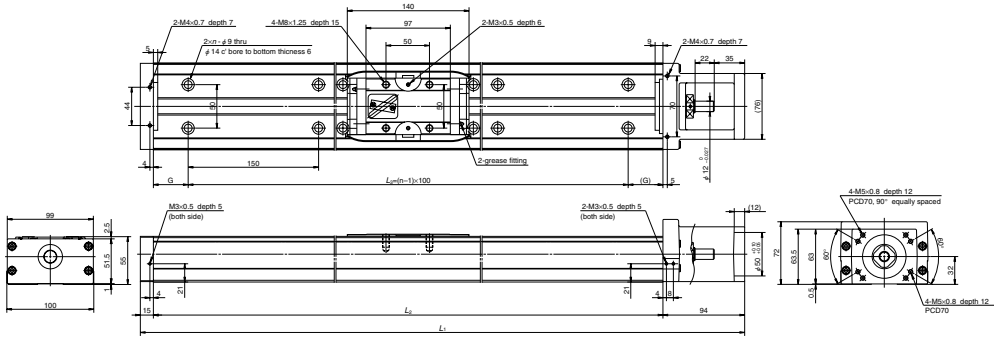

Dimension of MCH10 (Single slider)

Reference number	Nominal stroke (mm)	Stroke limit(mm) (K1 is not equipped)	Ball screw lead (mm)	Body length (mm) L_1	L_2	G	L_3	n	Inertia $\times10^{-6}$(kg · m^2)	Mass (kg)
MCH10040H10K	400	426	10	689	580	65	450	4	62.4	14
MCH10040H20K		(442)	20						71.8	
MCH10050H10K	500	526	10	789	680	40	600	5	74.7	16
MCH10050H20K		(542)	20						82.3	
MCH10060H10K	600	626	10	889	780	15	750	6	84.9	19
MCH10060H20K		(642)	20						92.5	
MCH10070H10K	700	726	10	989	880	65	750	6	95.1	21
MCH10070H20K		(742)	20						103	
MCH10080H10K	800	826	10	1 089	980	40	900	7	105	23
MCH10080H20K		(842)	20						113	
MCH10090H20K	900	926(942)	20	1 189	1 080	15	1 050	8	123	25
MCH10100H20K	1 000	1 026(1 042)	20	1 289	1 180	65	1 050	8	133	27
★MCH10110H20K	1 100	1 126(1 142)	20	1 389	1 280	40	1 200	9	143	29
★MCH10120H20K	1 200	1 226(1 242)	20	1 489	1 380	15	1 350	10	154	32

Items not marked are available from standard stock.
Items marked with ★ are designated as "quick delivery item" upon request.

Monocarrier dynamic torque specification (N · cm)		
Ball screw lead	10	2.7～10.8
(mm)	20	3.1～12.7

1. Frictional resistance of NSK K1 is included in the dynamic torque in the table.
2. Grease is packed into ball screw, linear guide parts and support unit.
3. Consult NSK for life estimates under large moment loads.

Basic load rating

Lead ℓ (mm)	Shaft dia d (mm)	Basic dynamic load rating (N) Ball screw C_a	linear guides C	Support unit C_a	Rated running distance L_a (km)	Basic static load rating (N) Ball screw C_{0a}	Linear guides C_0	Support unit Load limit (N)
10	ϕ 20	8230 (High grade) 10900 (Precision)	44600	7600	10	17100 (High grade) 21700 (Precision)	42000	3380
20		5300 (High grade) 7060 (Precision)	35400		20	10300 (High grade) 12700 (Precision)		

Basic static moment load of linear guide

Slider	Basic static moment load (N · m) Rolling M_{RO}	Pitching M_{PO}	Yawing M_{YO}
Single	1460	610	610

MCH10 (Double slider)

Accuracy grade: High grade (H)

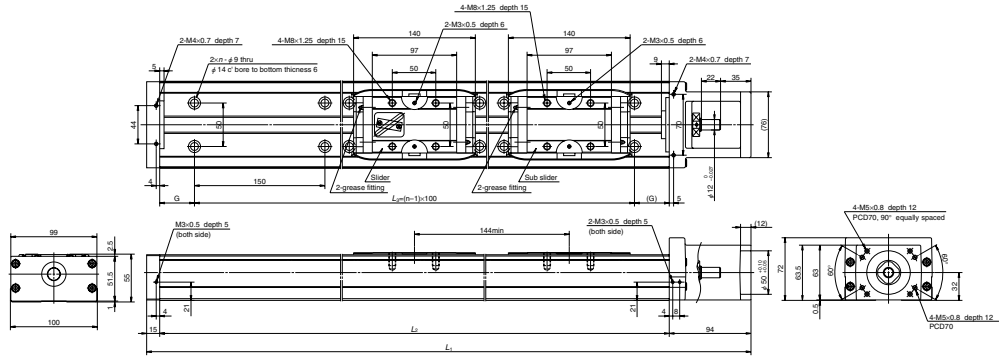

Dimension of MCH10 (Double slider)

Reference number	Nominal stroke (mm)	Stroke limit(mm) (K1 is not equipped)	Ball screw lead (mm)	Body length (mm) L_1	L_2	G	L_3	n	Inertia $\times10^{-6}$(kg · m^2)	Mass (kg)
★MCH10025H10D	250	282	10	689	580	65	450	4	67.1	15
★MCH10025H20D		(314)	20						82.4	
★MCH10035H10D	350	382	10	789	680	40	600	5	77.3	17
★MCH10035H20D		(414)	20						92.5	
★MCH10045H10D	450	482	10	889	780	15	750	6	87.5	20
★MCH10045H20D		(514)	20						103	
★MCH10055H10D	550	582	10	989	880	65	750	6	97.7	22
★MCH10055H20D		(614)	20						113	
★MCH10065H10D	650	682	10	1 089	980	40	900	7	108	24
★MCH10065H20D		(714)	20						123	
★MCH10075H20D	750	782(814)	20	1 189	1 080	15	1 050	8	133	26
★MCH10085H20D	850	882(914)	20	1 289	1 180	65	1 050	8	143	28
★MCH10095H20D	950	982(1 014)	20	1 389	1 280	40	1 200	9	154	30
★MCH10105H20D	1 050	1 082(1 114)	20	1 489	1 380	15	1 350	10	164	33

Items not marked are available from standard stock.
Items marked with ★ are designated as "quick delivery item" upon request.

Monocarrier dynamic torque specification (N · cm)		
Ball screw lead	10	4.2～15.6
(mm)	20	5.0～19.6

1. Frictional resistance of NSK K1 is included in the dynamic torque in the table.
2. Grease is packed into ball screw, linear guide parts and support unit.
3. Consult NSK for life estimates under large moment loads.

Basic load rating

Lead ℓ (mm)	Shaft dia d (mm)	Basic dynamic load rating (N) Ball screw C_a	linear guides C	Support unit C_a	Rated running distance L_a (km)	Basic static load rating (N) Ball screw C_{0a}	Linear guides C_0	Support unit Load limit (N)
10	ϕ 20	8230 (High grade) 10900 (Precision)	44600	7600	10	17100 (High grade) 21700 (Precision)	42000	3380
20		5300 (High grade) 7060 (Precision)	35400		20	10300 (High grade) 12700 (Precision)		

Basic static moment load of linear guide

Slider	Basic static moment load (N · m) Rolling M_{RO}	Pitching M_{PO}	Yawing M_{YO}
Double	2920	3430	3430

www.bergab.ru Берг АБ bergab@ya.ru Тел. (495)-228-06-21, факс (495) 223-3071

www.bergab.ru Берг АБ bergab@ya.ru Тел. (495)-228-06-21, факс (495) 223-3071

C-Ⅲ-3 MCH Series Option Part

C-Ⅲ-3. 1 Sensor Unit

Standard stock

●Proximity switch

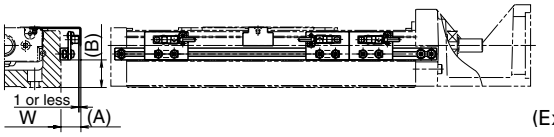

(Example of assembly)

Type		Reference number			Dimension(A) (mm)	Dimension(B) (mm)	Body width W (mm)
MCH06		MC-SRH06-10	MC-SRH06-11	MC-SRH06-12	17	10	60
MCH09		MC-SRH09-10	MC-SRH09-11	MC-SRH09-12	16	21	86
MCH10		MC-SRH10-10	MC-SRH10-11	MC-SRH10-12	16	16	100
quantity	Proximity switch (a-contact)	—	3	1	E2S-W13 (OMRON Corp.)		
	Proximity switch (b-contact)	3	—	2	E2S-W14 (OMRON Corp.)		

*See page C19 for specification of proximity switch. A sensor unit consists of sensors, a sensor dog and sensor mounting parts.

●Photo sensor

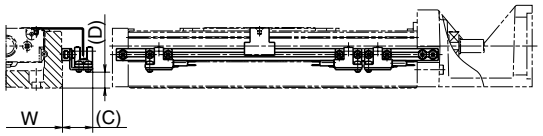

(Example of assembly)

Type	Reference number	Dimension(C) (mm)	Dimension(D) (mm)	Body width W (mm)	Remarks
MCH06	MC-SRH06-13	24	2	60	EE-SX674 (OMRON Corp.)
MCH09	MC-SRH09-13	23	12	86	3 sets
MCH10	MC-SRH10-13	22	16	100	(EE-1001 connector atachment)

*See page C20 for specification of photo sensor. A sensor unit consists of sensors, a sensor dog and sensor mounting parts.

●Sensor rail

Reference number : MC-SRL- ＊＊＊＊

● ＊＊＊＊ is the same as rail dimension L_2.

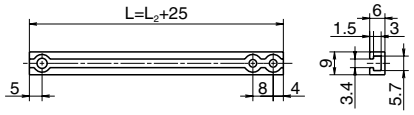

Body of MCH Series and Sensor rail combination Table

Table 3-4

Nominal size	Body length L_2 (mm)	Reference number	Sensor rail reference number
MCH06	150	MCH06005H05K MCH06005H10K	MC-SRL-0150
	200	MCH06010H05K MCH06010H10K	MC-SRL-0200
	300	MCH06020H05K MCH06020H10K MCH06010H05D MCH06010H10D	MC-SRL-0300
	400	MCH06030H10K MCH06030H20K MCH06020H05D MCH06020H10D	MC-SRL-0400
	500	MCH06040H10K MCH06040H20K MCH06030H05D MCH06030H10D	MC-SRL-0500
	600	MCH06050H10K MCH06050H20K MCH06040H10D MCH06040H20D	MC-SRL-0600
MCL06	150	MCL06005H05K MCL06005H10K	MC-SRL-0150
	200	MCL06010H05K MCL06010H10K	MC-SRL-0200
	300	MCL06020H05K MCL06020H10K	MC-SRL-0300
	400	MCL06030H10K MCL06030H20K	MC-SRL-0400
	500	MCL06040H10K MCL06040H20K	MC-SRL-0500
	600	MCL06050H10K MCL06050H20K	MC-SRL-0600
MCH09	340	MCH09020H05K MCH09020H10K	MC-SRL-0340
	440	MCH09030H05K MCH09030H10K MCH09015H05D MCH09015H10D	MC-SRL-0440
	540	MCH09040H05K MCH09040H10K MCH09025H05D MCH09025H10D	MC-SRL-0540
	640	MCH09050H10K MCH09050H20K MCH09035H05D MCH09035H10D	MC-SRL-0640
	740	MCH09060H10K MCH09060H20K MCH09045H10D MCH09045H20D	MC-SRL-0740
	940	MCH09080H10K MCH09080H20K MCH09065H10D MCH09065H20D	MC-SRL-0940

Nominal size	Body length L_2 (mm)	Reference number	Sensor rail reference number
MCH10	580	MCH10040H10K MCH10025H10D	MC-SRL-0580
	680	MCH10050H10K MCH10050H20K MCH10035H10D MCH10035H20D	MC-SRL-0680
	780	MCH10060H10K MCH10060H20K MCH10045H10D MCH10045H20D	MC-SRL-0780
	880	MCH10070H10K MCH10070H20K MCH10055H10D MCH10055H20D	MC-SRL-0880
	980	MCH10080H10K MCH10080H20K MCH10065H10D MCH10065H20D	MC-SRL-0980
	1080	MCH10090H20K MCH10075H20D	MC-SRL-1080
	1180	MCH10100H20K MCH10085H20D	MC-SRL-1180
	1280	MCH10110H20K MCH10095H20D	MC-SRL-1280
	1380	MCH10120H20K MCH10105H20D	MC-SRL-1380

www.bergab.ru Берг АБ bergab@ya.ru Тел. (495)-228-06-21, факс (495) 223-3071

www.bergab.ru Берг АБ bergab@ya.ru Тел. (495)-228-06-21, факс (495) 223-3071

C-Ⅲ-3. 2 Cover Unit

Standard stock

Cover unit for MCH06
Cover unit for MCL06

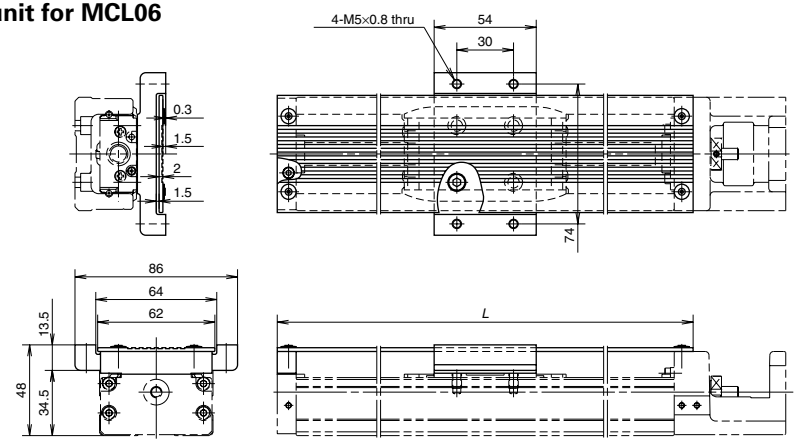

(Unit: mm)

Single slider		Double slider		Top cover length
Stroke	Reference number	Stroke	Reference number	*L*
50	MC-HV06005-00	–	–	170
100	MC-HV06010-00	–	–	220
200	MC-HV06020-00	100	MC-HV06010D00	320
300	MC-HV06030-00	200	MC-HV06020D00	420
400	MC-HV06040-00	300	MC-HV06030D00	520
500	MC-HV06050-00	400	MC-HV06040D00	620

Cover unit for MCH09

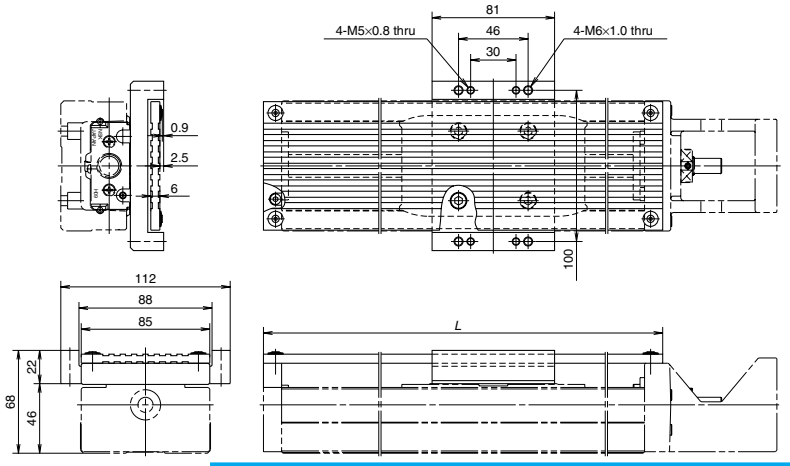

(Unit: mm)

Single slider		Double slider		Top cover length
Stroke	Reference number	Stroke	Reference number	*L*
200	MC-HV09020-00	–	–	364
300	MC-HV09030-00	150	MC-HV09015D00	464
400	MC-HV09040-00	250	MC-HV09025D00	564
500	MC-HV09050-00	350	MC-HV09035D00	664
600	MC-HV09060-00	450	MC-HV09045D00	764
800	MC-HV09080-00	650	MC-HV09065D00	964

Standard stock

Cover unit for MCH10

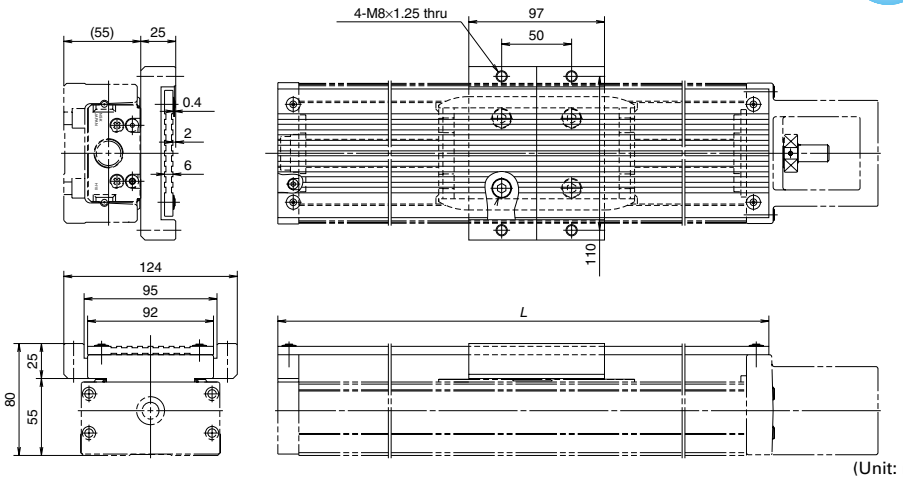

(Unit: mm)

Single slider		Double slider		Top cover length
Stroke	Reference number	Stroke	Reference number	*L*
400	MC-HV10040-00	250	MC-HV10025D00	610
500	MC-HV10050-00	350	MC-HV10035D00	710
600	MC-HV10060-00	450	MC-HV10045D00	810
700	MC-HV10070-00	550	MC-HV10055D00	910
800	MC-HV10080-00	650	MC-HV10065D00	1010
900	MC-HV10090-00	750	MC-HV10075D00	1110
1000	MC-HV10100-00	850	MC-HV10085D00	1210
1100	MC-HV10110-00	950	MC-HV10095D00	1310
1200	MC-HV10120-00	1050	MC-HV10105D00	1410

●Cover unit for double sliders (reference drawing)

Two spacers are attached for the double slider.

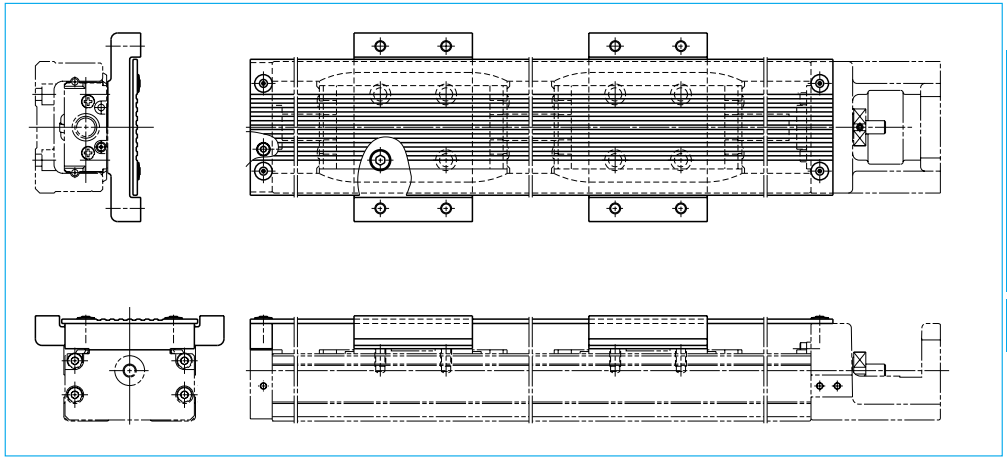

C 70

www.bergab.ru Берг АБ bergab@ya.ru Тел. (495)-228-06-21, факс (495) 223-3071

www.bergab.ru Берг АБ bergab@ya.ru Тел. (495)-228-06-21, факс (495) 223-3071

C-Ⅲ-3. 3 Intermediate Plate For Motor

Standard stock

- Please ask NSK for a motor that is not listed in the compatible motor list.
- In case of motor indirect mount, please consult with NSK.
- Be sure to align the center lines when installing the motor.

Motor Bracket for MCH06 and MCL06

Reference number : MC-BKH06-145-00

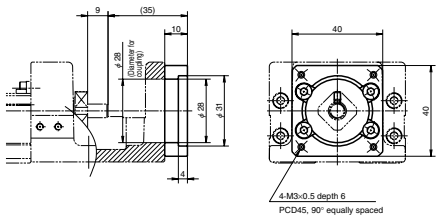

Compatible motor	
Maker	Motor models
Matsushita Electric Industrial Co., Ltd.	MSMD5A(50W), MSMD01(100W)

Reference number : MC-BKH06-146-00

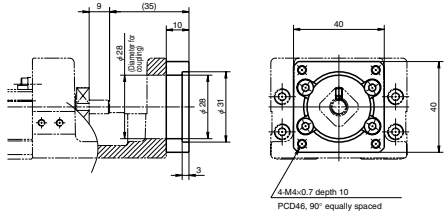

Compatible motor	
Maker	Motor models
Yaskawa Electric Corp.	SGMAH-A3(30W), SGMAH-A5(50W), SGMAS-A5A(50W) SGMAH-01(100W), SGMAS-01A(100W)
Mitsubishi Electric Corp.	HF-KP053(50W), HF-MP053(50W), HC-KFS053(50W) HC-MFS053(50W), HF-KP13(100W), HF-MP13(100W) HC-KFS13(100W), HC-MFS13(100W)
OMRON Corp.	R88M-W03(30W), R88M-W05(50W), R88M-W10(100W)
Sanyo Denki Co., Ltd.	P30B04xxx P Series

Reference number : MC-BKH06-231-00

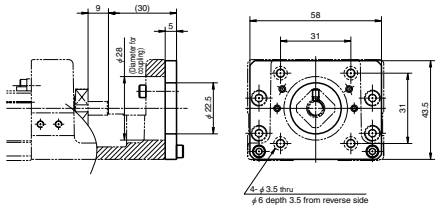

Compatible motor	
Maker	Motor models
Oriental Motor Co., Ltd.	AS46, ASC46, UPK54x, PK54x, CSK54x, CFK54x, UMK24x, CSK24x, PK24x
Sanyo Denki Co., Ltd.	PBM423xxx, 103F55xx

Reference number : MC-BKH06-250-00

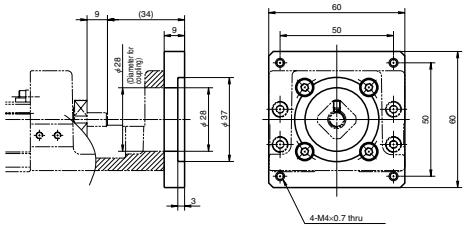

Compatible motor	
Maker	Motor models
Oriental Motor Co., Ltd.	AS66, ASC66, UPK56x, UFK56x, PK56x, CSK56x, CFK56x MUMS02(200W), MUMS04(400W)
Sanyo Denki Co., Ltd.	PBM603xx, PBM604xx, 103F78xx

Diameter of ball screw shaft end to install a pulley for indirect motor mount of MCH06

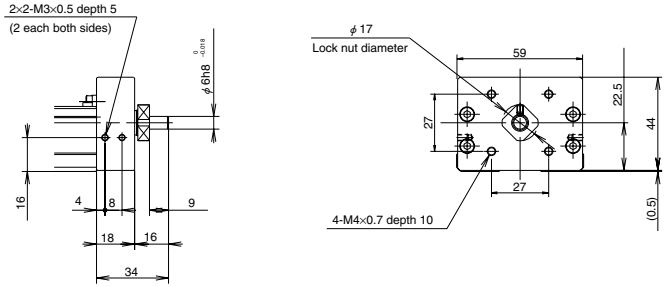

Motor Bracket for MCH09

Reference number : MC-BKH09-145-00
MC-BKH09-146-00

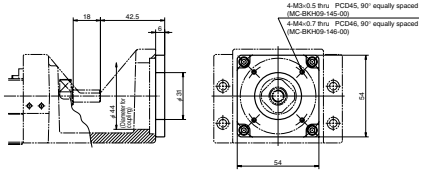

Reference number	Compatible motor	
	Maker	Motor models
MC-BKH09-145-00	Matsushita Electric Industrial Co., Ltd.	MSMD5A(50W), MSMD01(100W)
MC-BKH09-146-00	Yaskawa Electric Corp.	SGMAH-A5(50W), SGMAS-A5A(50W) SGMAH-01(100W), SGMAS-01A(100W)
	Mitsubishi Electric Corp.	HF-KP053(50W), HF-MP05(50W), HC-KFS053(50W) HC-MFS053(50W), HF-KP13(100W), HF-MP13(100W) HC-KFS13(100W), HC-MFS13(100W)
	OMRON Corp.	R88M-W05(50W), R88M-W10(100W)
	Sanyo Denki Co., Ltd.	P30B04xxx P Series

Reference number : MC-BKH09-170-00
MC-BKH09-170-01

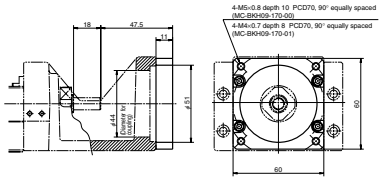

Reference number	Compatible motor	
	Maker	Motor models
MC-BKH09-170-00	Yaskawa Electric Corp.	SGMAH-02(200W), SGMAS-02A(200W) SGMAH-04(400W), SGMAS-04A(400W)
	Mitsubishi Electric Corp.	HF-KP23(200W), HF-MP23(200W) HF-KP43(400W), HF-MP43(400W)
	OMRON Corp.	R88M-W20(200W), R88M-W40(400W)
	Sanyo Denki Co., Ltd.	P30B06xxx P Series
MC-BKH09-170-01	Matsushita Electric Industrial Co., Ltd.	MSMD02(200W), MSMA02(200W) MSMA04(400W), MSMD04(400W)

Reference number : MC-BKH09-231-00

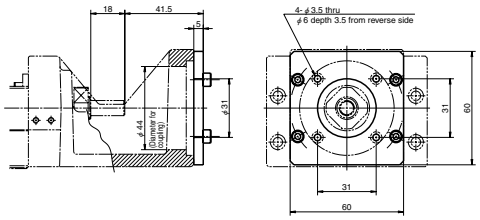

Compatible motor	
Maker	Motor models
Sanyo Denki Co., Ltd.	PBM423xxx, 103F55xx
Oriental Motor Co., Ltd.	AS46, ASC46, UPK54x, PK54x, CSK54x, CFK54x UMK24x, CSK24x, PK24x

Reference number : MC-BKH09-250-00

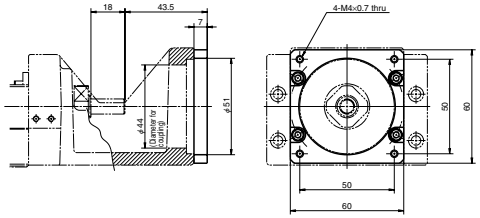

Compatible motor	
Maker	Motor models
Sanyo Denki Co., Ltd.	PBM603xx, PBM604xx, 103F78xx
Oriental Motor Co., Ltd.	AS66, ASC66, UPK56x, UFK56x, PK56x CSK56x, CFK56x

Diameter of ball screw shaft end to install a pulley for indirect motor mount of MCH09

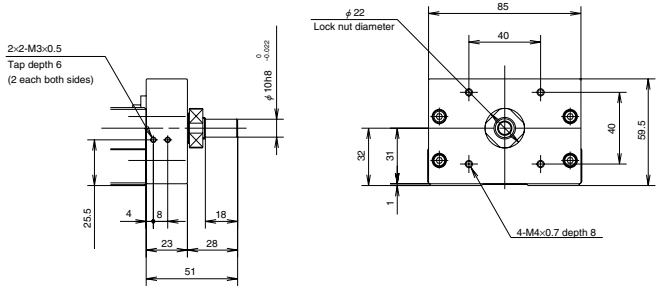

C 72

www.bergab.ru Берг АБ bergab@ya.ru Тел. (495)-228-06-21, факс (495) 223-3071

www.bergab.ru Берг АБ bergab@ya.ru Тел. (495)-228-06-21, факс (495) 223-3071

Standard stock

Motor Bracket for MCH10

Reference number : MC-BKH10-170-00 MC-BKH10-170-01

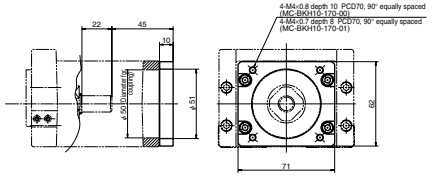

Reference number	Compatible motor	
	Maker	Motor models
MC-BKH10-170-00	Yaskawa Electric Corp.	SGMAH-02(200W), SGMAS-02A(200W) SGMAH-04(400W), SGMAS-04A(400W)
	Mitsubishi Electric Corp.	HF-KP23(200W), HF-MP23(200W) HF-KP43(400W), HF-MP43(400W)
	OMRON Corp.	R88M-W20(200W), R88M-W40(400W)
	Sanyo Denki Co., Ltd.	P30B06xxx P Series
MC-BKH10-170-01	Matsushita Electric Industrial Co., Ltd.	MSMD02(200W), MSMA02(200W) MSMD04(400W), MSMA04(400W)

Reference number : MC-BKH10-190-00 MC-BKH10-190-01

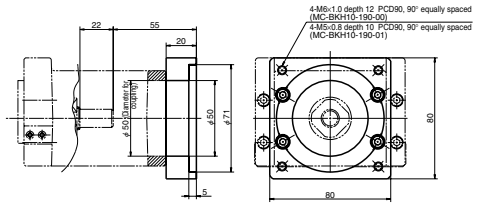

Reference number	Compatible motor	
	Maker	Motor models
MC-BKH10-190-00	Mitsubishi Electric Corp.	HC-KFS73(750W), HC-MFS73(750W) HF-KP73(750W), HF-MP73(750W)
MC-BKH10-190-01	Sanyo Denki Co., Ltd.	P50B07xxx P Series

Reference number : MC-BKH10-250-00

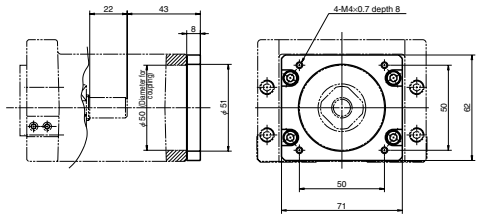

Compatible motor	
Maker	Motor models
Sanyo Denki Co., Ltd.	PBM603xx, PBM604xx, 103F78xx
Oriental Motor Co., Ltd.	AS66, ASC66, UPK56x, PK56x, CSK56x, CFK56x UMK56x, UFK56X

Reference number : MC-BKH10-270-00

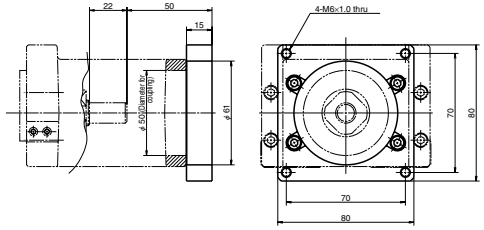

Compatible motor	
Maker	Motor models
Oriental Motor Co., Ltd.	AS98, ASC98, UPK59x, PK59x, CSK59x, CFK59x UMK59x, UFK59x

Diameter of ball screw shaft end to install a pulley for indirect motor mount of MCH10

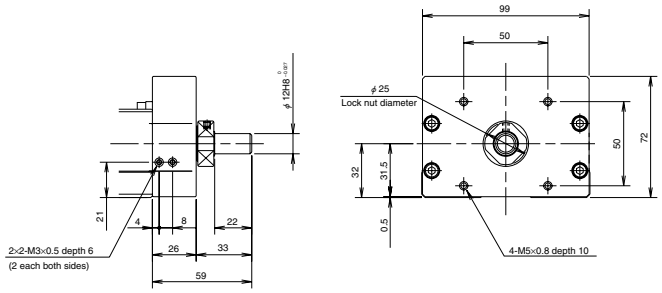

Availability Motor Table of Intermediate Plate for MCH Series

Table 3-5

Nominal size	Reference number code	Motor bracket reference number	Motor manufacturer	Stepping motor model number	Wattage of AC servo motor					
					30	50	100	200	400	750
MCH06 MCL06	1	MC-BKH06-145-00	Matsushita Electric Industrial Co., Ltd.			MSMD5A	MSMD01			
	2	MC-BKH06-146-00	Yaskawa Electric Corp.		SGMAH-A3	SGMAH-A5 SGMAS-A5A	SGMAH-01 SGMAS-01A			
			Mitsubishi Electric Corp.			HF-KP053 HF-MP053 HC-KFS053 HC-MFS053	HF-KP13 HF-MP13 HC-KFS13 HC-MFS13			
			OMRON Corp.		R88M-W03	R88M-W05	R88M-W10			
			Sanyo Denki Co., Ltd.	P30B04xxx (P Series)						
	3	MC-BKH06-231-00	Sanyo Denki Co., Ltd.	PBM423xxx 103F55xx						
			Oriental Motor Co., Ltd.	AS46 , ASC46 UPK54x , PK54x CSK54x , CFK54x UMK24x , CSK24x PK24x						
	4	MC-BKH06-250-00	Sanyo Denki Co., Ltd.	PBM603xx PBM604xx 103F78xx						
			Oriental Motor Co., Ltd.	AS66 , ASC66 UPK56x , UFK56x PK56x , CSK56x CFK56x				MUMS02	MUMS04	
MCH09	1	MC-BKH09-145-00	Matsushita Electric Industrial Co., Ltd.			MSMD5A	MSMD01			
	2	MC-BKH09-146-00	Yaskawa Electric Corp.			SGMAH-A5 SGMAS-A5A	SGMAH-01 SGMAS-01A			
			Mitsubishi Electric Corp.			HF-KP053 HF-MP05 HC-KFS053 HC-MFS053	HF-KP13 HF-MP13 HC-KFS13 HC-MFS13			
			OMRON Corp.			R88M-W05	R88M-W10			
			Sanyo Denki Co., Ltd.	P30B04xxx (P Series)						
	3	MC-BKH09-170-00	Yaskawa Electric Corp.					SGMAH-02 SGMAS-02A	SGMAH-04 SGMAS-04A	
			Mitsubishi Electric Corp.					HF-KP23 HF-MP23	HF-KP43 HF-MP43	
			OMRON Corp.					R88M-W20	R88M-W40	
			Sanyo Denki Co., Ltd.	P30B06xxx (P Series)						
	4	MC-BKH09-170-01	Matsushita Electric Industrial Co., Ltd.					MSMD02 MSMA02	MSMD04 MSMA04	
	5	MC-BKH09-231-00	Sanyo Denki Co., Ltd.	PBM423xxx 103F55xx						
			Oriental Motor Co., Ltd.	AS46 , ASC46 UPK54x , PK54x CSK54x , CFK54x UMK24x , CSK24x PK24x						
	6	MC-BKH09-250-00	Sanyo Denki Co., Ltd.	PBM603xx PBM604xx 103F78xx						
			Oriental Motor Co., Ltd.	AS66 , ASC66 UPK56x , UFK56x PK56x , CSK56x CFK56x						
MCH10	1	MC-BKH10-170-00	Yaskawa Electric Corp.					SGMAH-02 SGMAS-02A	SGMAH-04 SGMAS-04A	
			Mitsubishi Electric Corp.					HF-KP23 HF-MP23	HF-KP43 HF-MP43	
			OMRON Corp.					R88M-W20	R88M-W40	
			Sanyo Denki Co., Ltd.	P30B06xxx (P Series)						
	2	MC-BKH10-170-01	Matsushita Electric Industrial Co., Ltd.					MSMD02 MSMA02	MSMD04 MSMA04	
	3	MC-BKH10-190-00	Mitsubishi Electric Corp.							HC-KFS73 HC-MFS73 HF-KP73 HF-MP73
	4	MC-BKH10-190-01	Sanyo Denki Co., Ltd.	P50B07xxx (P Series)						
	5	MC-BKH10-250-00	Sanyo Denki Co., Ltd.	PBM603xx PBM604xx 103F78xx						
			Oriental Motor Co., Ltd.	AS66 , ASC66 UPK56x , PK56x CSK56x , CFK56x UMK56x , UFK56x						
	6	MC-BKH10-270-00	Oriental Motor Co., Ltd.	AS98 , ASC98 UPK59x , PK59x CSK59x , CFK59x UMK59x , UFK59x						

C 74

www.bergab.ru Берг АБ bergab@ya.ru Тел. (495)-228-06-21, факс (495) 223-3071

www.bergab.ru Берг АБ bergab@ya.ru Тел. (495)-228-06-21, факс (495) 223-3071

www.bergab.ru Берг АБ bergab@ya.ru Тел. (495)-228-06-21, факс (495) 223-3071

MEMO

rgab.ru Берг АБ bergab@ya.ru Тел. (495)-228-06-21, факс (495) 2

rgab.ru Берг АБ bergab@ya.ru Тел. (495)-228-06-21, факс (495) 2

www.bergab.ru Берг АБ bergab@ya.ru Тел. (495)-228-06-21, факс (495) 223-3071

Other

Other

1.Special Environments ····· D1
2.Lubrication ····· D13

www.bergab.ru Берг АБ bergab@ya.ru Тел. (495)-228-06-21, факс (495) 223-3071

www.bergab.ru Берг АБ bergab@ya.ru Тел. (495)-228-06-21, факс (495) 223-3071

1 Special Environments

1-1. Specifications for Special Environments

1. Linear guide

Table 1-1•1 Linear guide specifications

Environment	Condition	NSK linear guide specifications				Technical Explanation Page No.
		Rail, slider	Steel balls	Ball Recirculation component	Lubrication/surface treatment	
Clean	Atmosphere, normal temperature	Standard material	Standard material	Standard material	LG2 Grease	D8
					NSK K1 lubrication unit	D10
		Martensitic stainless steel	Martensitic stainless steel	Austenitic stainless steel	LG2 Grease	D8
					NSK K1 lubrication unit	D10
					Fluoride low temperature chrome plating	D5
	Atmosphere~Vacuum, normal temperature				Fluoride grease	
	Atmosphere~Vacuum up to 200 °C					
Vacuum	Atmosphere~Vacuum, normal temperature	Martensitic stainless steel	Martensitic stainless steel	Austenitic stainless steel	Fluoride grease	
	Atmosphere~Vacuum up to 200 °C					
	Atmosphere~Vacuum up to 300 °C				Molybdenum disulfide	
	High vacuum up to 500 °C				Special silver film	D7
Corrosion resistance	Vapor, steam	Martensitic stainless steel	Martensitic stainless steel	Austenitic stainless steel		
		Standard material	Standard material	Standard material	Fluoride low temperature chrome plating	D5
	Acid, alkali			Austenitic stainless steel		D5
		Martensitic stainless steel	Martensitic stainless steel			D5
	Acid, alkali, clean				Fluoride low temperature chrome plating	D5
					LG2 Grease	D8
	Strong acid, strong alkali				Fluoride low temperature chrome plating	D5
					Fluoride grease	
	Organic solvent				Fluoride grease	
High temperature	Atmosphere up to 150 °C	Standard material	Standard material	Austenitic stainless steel	ET150 Grease	
		Martensitic stainless steel	Martensitic stainless steel			
	Atmosphere Up to 200 °C				Fluoride grease	
	Atmosphere Up to 200 °C, Corrosion resistant				Fluoride grease	
Low temperature	-273 °C ~	Martensitic stainless steel	Martensitic stainless steel	Austenitic stainless steel	Solid lubricant	
Radiation resistance	Atmosphere	Standard material	Standard material	Standard material	Radiation resistant grease	
		Martensitic stainless steel	Martensitic stainless steel	Austenitic stainless steel		
Foreign matters	Fine particles, wooden chips	Standard material	Standard material	Standard material	NSK K1 lubrication unit	D10
		Martensitic stainless steel	Martensitic stainless steel	Austenitic stainless steel		D10
	Water, under water		Standard material	Standard material		D10
			Martensitic stainless steel	Austenitic stainless steel		D10

2. Ball screw

Table 1-2•2 Ball screw specifications

Environment	Condition	NSK Ball screw specification				Technical Explanation Page No.
		Screw shaft, ball nut	Steel balls	Ball Recirculation component	Lubrication/surface treatment	
Clean	Atmosphere, normal temperature	Standard material	Standard material	Standard material	LG2 Grease	D8
					NSK K1 lubrication unit	D10
		Martensitic stainless steel	Martensitic stainless steel	Austenitic stainless steel	LG2 Grease	D8
					NSK K1 lubrication unit	D10
					Fluoride low temperature chrome plating	D5
	Atmosphere~Vacuum, normal temperature				Fluoride grease	
	Atmosphere~Vacuum up to 200 °C					
	Atmosphere up to 200 °C, Corrosion resistant	Ceramic	Ceramic	Ceramic	Fluoride grease	
Vacuum	Atmosphere~Vacuum, normal temperature	Martensitic stainless steel	Martensitic stainless steel	Austenitic stainless steel	Fluoride grease	
	Atmosphere~Vacuum up to 200 °C					
	Atmosphere~Vacuum up to 300 °C				Molybdenum disulfide	
	High vacuum up to 500 °C				Special silver film	D7
Corrosion resistance	Acid, alkali, clean	Standard material	Standard material	Austenitic stainless steel	Fluoride low temperature chrome plating	D5
		Martensitic stainless steel	Martensitic stainless steel			D5
		Precipitation hardening stainless steel	Precipitation hardening stainless steel		Fluoride grease	
	Strong acid, strong alkali, clean, nonmagnetic	Ceramic	Ceramic			
Nonmagnetic	Atmosphere-Vacuum, clean	Special austenitic stainless steel	Ceramic	Austenitic stainless steel	Fluoride grease	
	Atmosphere-Vacuum, up to 200 °C, clean	Ceramic			Fluoroplastic	
High temperature	Atmosphere Up to 200 °C	Standard material	Standard material	Austenitic stainless steel	Fluoride grease	
	Atmosphere Up to 200 °C	Martensitic stainless steel	Martensitic stainless steel		Fluoride low temperature chrome plating	D5
	Atmosphere- up to 500 °C, corrosion resistance	Ceramic	Ceramic		Fluoride grease	
Low temperature	-273 °C ~	Martensitic stainless steel	Martensitic stainless steel	Austenitic stainless steel	Solid lubricant	
Radiation resistance	Atmosphere	Standard material	Standard material	Standard material	Radiation resistant grease	
		Martensitic stainless steel	Martensitic stainless steel	Austenitic stainless steel		
Foreign matters	Fine particles, wooden chips	Standard material	Standard material	Standard material	NSK K1 lubrication unit	D10
		Martensitic stainless steel	Martensitic stainless steel	Austenitic stainless steel		D10
	Water, under water					D10

D 2

www.bergab.ru Берг АБ bergab@ya.ru Тел. (495)-228-06-21, факс (495) 223-3071

www.bergab.ru Берг АБ bergab@ya.ru Тел. (495)-228-06-21, факс (495) 223-3071

1-2. Lubrication and Materials

1. Lubrication

Grease can be used for high rotation and magnetic field. However, grease evaporates or solidifies in special environment such as vacuum, high temperature, and low temperature. Solid lubricant is used when it is difficult to use grease. Functions of solid lubricant differ greatly by condition where it is used. It is important to select the most suitable solid lubrication for the environment.

Fig. 1-2•1 Lubrication in clean environment

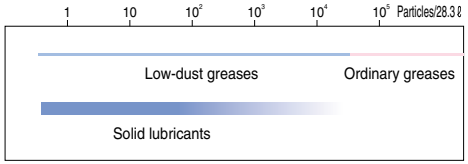

Fig. 1-2•2 Lubrication in vacuum

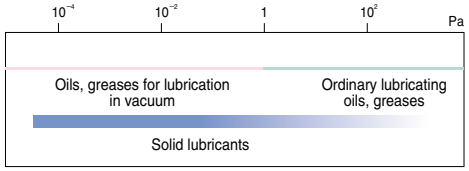

Fig. 1-2•3 Lubrication in corrosive environment

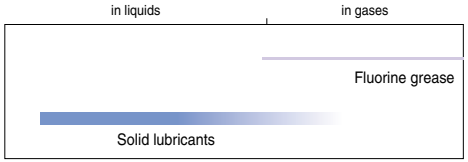

Fig. 1-2•4 Lubrication in high temperature

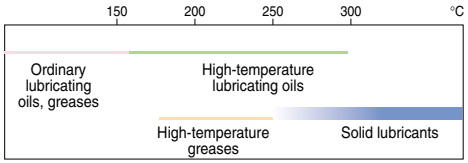

Fig. 1-2•5 Lubrication in low temperature

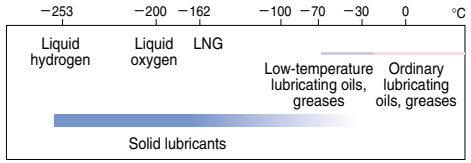

Fig. 1-2•6 Lubrication in radioactive environment

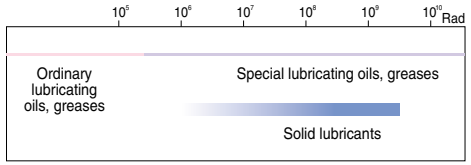

Fig. 1-2•7 Temperature range for using solid lubricants

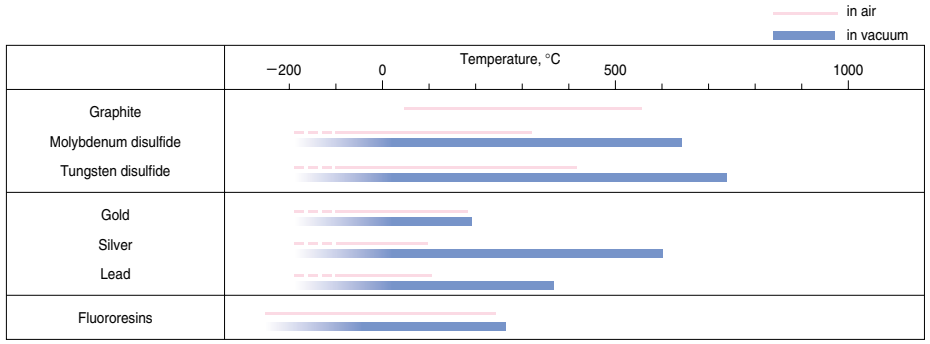

2. Materials

Iron type metals are used in vacuum, high temperature, and high speed environments as the basic material. We generally use of nonmagnetic stainless steel for nonmagnetic materials.

Table 1-2•1 Characteristics of metal materials

Application	Type of steel	Linear expansivity $\times 10^{-6}$/℃	Young's modulus GPa	Hardness (1) HB
For clean environment, vacuum environment, corrosion resistance, low temperature, high temperature, radioactive resistance	Martensitic stainless steel SUS440C	10.1	200	580
	Austenitic stainless steel SUS304	16.3	193	150
	Precipitation hardening stainless steel SUS630	10.8	200	277～363
Nonmagnetic	Nonmagnetic stainless steel	17.0	195	420

Note (1) Hardness of steel is usually indicated by Rockwell C Scale. For comparison, these figures are expressed by Brinell number.

www.bergab.ru Берг АБ bergab@ya.ru Тел. (495)-228-06-21, факс (495) 223-3071

www.bergab.ru Берг АБ bergab@ya.ru Тел. (495)-228-06-21, факс (495) 223-3071

1-3. Rust Prevention and Surface Treatment

1. Fluoride low temperature chrome plating

The use environment of NSK linear guides and ball screws is expanding from general industrial machines, semiconductor and liquid crystal manufacturing systems to aerospace equipment.
Among all measures to cope with environment, rust prevention is the most challenging. Such environment includes: Moisture for washers and other equipment; Chemicals used in the wet processing of semiconductor and liquid crystal display manufacturing equipment.
NSK developed electrolytic rust prevention black film treatment (black chrome plating) which is added by fluoro resin impregnating treatment. (hereinafter referred as "Fluoride low temperature chrome plating") This surface treatment methods has proved its superiority as the rust prevention of linear guides and ball screws which are used in above equipment.

● What is "Fluoride low temperature chrome plating ?"

This is a type of black chrome plating which forms a black film (1~2μm) on the metal surface. Fluoroplastic coating is added to the film to increase corrosion resistance.

- Accuracy control is easily manageable due to low temperature treatment and to an absence of hydrogen embrittlement.
- Product accuracy is less affected due to the thin film which has high corrosion resistance.
- This method is superior to other surface treatments in durability on the rolling surface.
- Inexpensive compared with products by other surface treatment and stainless steel products.

Do not use organic solvent because it adversely affects antirust property of the plating.

● Characteristics

Humidity cabinet corrosion resistance test

Table 1-3•1 Results of the humidity cabinet test

Characteristic	Test sample	Fluoride low temperature chrome plating	Hard chrome plating	Electroless nickel plating	Equivalent to SUS440C material	Standard steel
Rusting	Top	(Ground) B	(Ground) B	(Ground) A	(Ground) C	(Ground) D
	Side	(Ground) A	(Ground) A	(Ground) A	(Ground) C	(Ground) E
	Bottom	(Ground) A	(Ground) A	(Ground) A	(Ground) C	(Ground) E
	End	(Machined) A	(Machined) C	(Machined) A	(Machined) C	(Machined) E
	Chamfer/grinding recess	(Drawn) A	(Drawn) D	(Drawn) A	(Drawn) C	(Drawn) E
Rust prevention ability	Test conditions ● Testing cabinet: High temperature, highly moist cabinet (made by DABAI ESPEC) ● Temperature: 70 deg. C ● Relative humidity: 95% ● Testing time: 96h Time to "reach to" and "falling from" the temperature/humidity conditions Reaching: 5h Falling: 2h					
				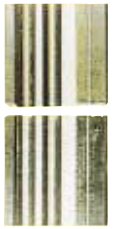		
	Film thickness	5μm	0.5~7μm	10μm	—	—

Rusting A: No rust B: Not rust, but some discoloration
C: Spotted rust D: Light rusted E: Completely rusted

● Corrosion resistance test against chemicals

Table 1-3•2 Result of the corrosion resistance test

Test conditions: Rail base material: Equivalent to SUS440C
Chemical density: 1 mol/ℓ

Fluoride low temperature chrome plating		Hard chrome plating	None surface treatment
	Immersed in solution for 24hrs Nitric acid		
	Immersed in solution for 24hrs Fluoride		
	Exposed to vapor for 72hrs Hydrochloric acid type washing solution $HCl : H_2O_2 : H_2O = 1 : 1 : 8$		
○	Hydrochloric acid (immersed)	○	▲
○	Sulfuric acid (immersed)	○	×
○	Ammonia or sodium hydroxide	○	△

○: Normal △: Partial surface damage ▲: Overall surface damage ×: Corroded

● Surface treatment durability test

Fig. 1-3•1 Result of durability test

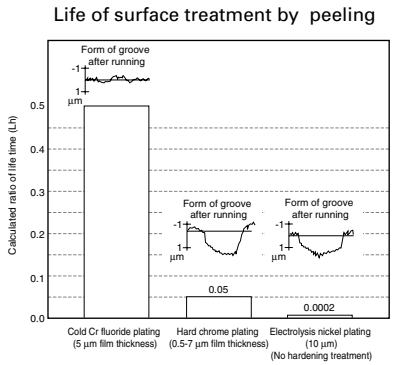

● Total evaluation

Table 1-3•3 Evaluation

	Available length	Rust prevention ability	Quality stability	Durability	Cost
Fluoride low temperature chrome plating	◎ (4m)	◎	○	◎	◎
Hard chrome plating	△ (2m)	○	×	△	△
Electroless nickel plating	◎ (4m)	◎	△	×	△
Material equivalent to SUS440C	○ (3.5m)	○	◎	◎	△

◎: Excellent ○: Suitable in use
△: Not very suitable in use ×: Problem in use

www.bergab.ru Берг АБ bergab@ya.ru Тел. (495)-228-06-21, факс (495) 223-3071

www.bergab.ru Берг АБ bergab@ya.ru Тел. (495)-228-06-21, факс (495) 223-3071

1-4. Measures Against Special Environments

1. In vacuum

● Silver-film plated ball screw

Ball screws that are plated by soft metal (special silver film) as a solid lubricant are developed the application for vacuum environment such as semiconductor manufacturing equipment and surface modification systems.

● Durability test in high vacuum

Test equipment and conditions

Table 4-1 shows ball screw specifications. Figure 4.1 is a schematic of the testing system in vacuum chamber. Table 4-2 shows testing conditions.

Table 1-4•1 Ball screw specifications

Shaft diameter		12mm
Lead		4mm
Steel ball diameter		2.381mm
Numbers of circuit of balls		2.5 turns, 1 circuit
Axis load (preload)		29.4N
Maximum surface pressure (preload volume)		about 690Pa
Material	Shaft	SUS630
	Nut	SUS440C
	Ball return tube	SUS304
	Steel balls	SUS440C
Solid lubricant		Special silver film

Table 1-4•2 Testing conditions

Rotational speed	$300min^{-1}$
Vacuum chamber pressure	$1.3\times10^{-5}\sim1.3\times10^{-6}$Pa
Stroke	160mm

Evaluation method

It is understood that the rolling bearing with solid lubrication reaches end of life when the lubrication film deteriorates, resulting in sudden rise of friction torque. In this test, ball screw rotation torque was constantly measured to study durability and operation. Results were then evaluated.

Test results

Fig. 1-4•2 shows two distinctive exanples obtained in the torque characteristic test.

Photo **1-4•1** Vacuum testing system

Fig. 1-4•1 Schematic of the testing system

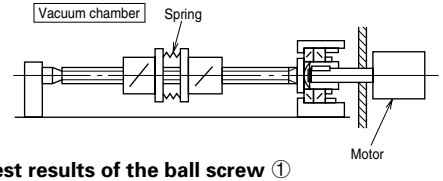

Test results of the ball screw ①

The torque tendency was stable until about 1 x 10^7 rev. Then the torque characteristics slightly deteriorated. At about 1.35 x 10^7 rev, the torque suddenly rose. At this point, it was determined that the ball screw reached the end of its life.

Test results of the ball screw ②

Torque value is little higher than that in test ①. The value is also little unstable. The torque momentarily soared several times during the test (some 10N • cm). It is thought this is attributable to the repeated peeling/sticking of the surface film made of soft metal (silver, etc.).

When the torque finally soared at 1.13 x 10^7 rev., it was determined that the ball screw reached the end of its life.

Fig. 1-4•2 Torque variation

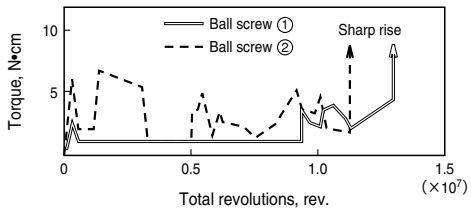

Table 1-4•3 Ball screw durability

	Classification	Ball screw ①	Ball screw ②
Life	Total revolutions (rev.)	1.35×10^7	1.13×10^7
	Total traveling distance (km)	54.0	45.2
	Total traveling hours[1] (h)	750	628

Note: (1) Total traveling hours when operated constantly at 300 min^{-1}

Conclusion

Table 4-3 explains results of the two ball screw durability tests.

From these results and other findings, it is estimated that a life of more than 1 x 10^7rev is possible with a load of about 29.4N.

Torque may soar momentarily before the ball screw reaches its final life due to peeling/sticking of the surface film made of soft metal like silver. For this reason, it is recommendable to select a drive motor with extra torque capacity.

2. Clean environment

● NSK Clean Grease LG2, LGU

NSK Clean Grease LG2 is used in clean room for NSK linear guides, ball screws, Monocarriers, Robot Modules, Megathrust motors, XY tables, etc. with low-dust emitting specifications. For its low dust emission and high durability, LG2 earns trust and high reputation of semiconductor equipment manufacturers.

LG2 is superior in many areas to fluorine greases which are commonly used in clean room.

Features

- **Remarkably low dust emission**
- **Long life -- More than ten times longer than fluoride greases, and equivalent to ordinary greases.**
- **Excellent rust prevention -- Significantly higher capacity than fluorine greases.**
- **Low and stable torque -- 20% or less than that of fluorine greases**

Table 1-4•4 Nature of Clean Grease LG2

Name	Thickener	Base oil	Base oil kinematic viscosity mm^2/s (40℃)	Consistency	Dropping point ℃
Clean Grease LG2	Lithium soap	Synthetic hydrocarbon oil + mineral oil	30	207	200
Clean Grease LGU	Diurea	Synthetic hydrocarbon oil	100	209	260

Fig. 1-4•3 Setting to measure dust generated by ball screw

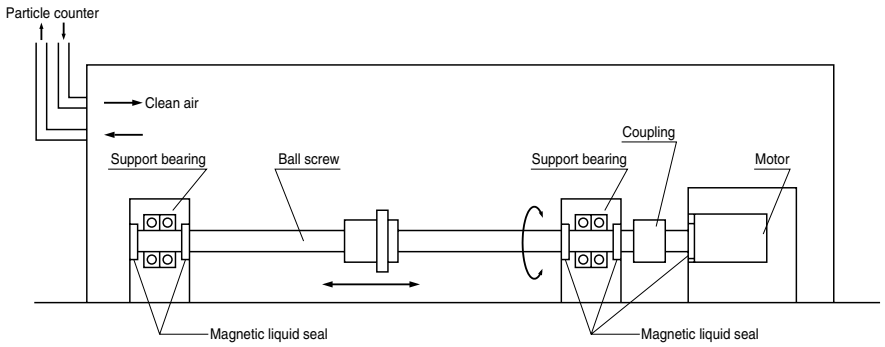

www.bergab.ru Берг АБ bergab@ya.ru Тел. (495)-228-06-21, факс (495) 223-3071

www.bergab.ru Берг АБ bergab@ya.ru Тел. (495)-228-06-21, факс (495) 223-3071

● Feature 1: Remarkably low dust emission

Compared with fluoride greases, dust emission by LG2 is low and stable for long period of time.

Fig. 1-4•4 Comparison in dust emission characteristics

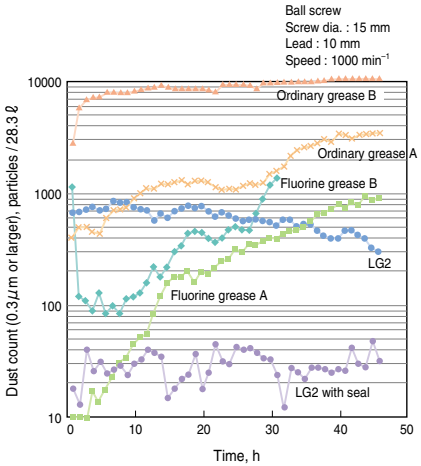

Fig. 1-4•5 Dust emission from linear guide (Linear guide: LU09)

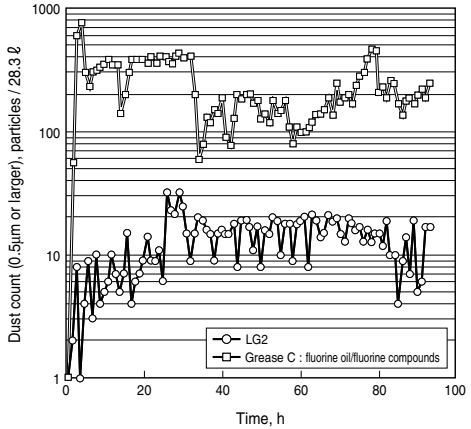

● Feature 2 : Long life

Life is ten times or longer than fluorine greases, and equivalent to ordinary greases. This stretches maintenance intervals.

Fig. 1-4•6 Results of ball screw durability test

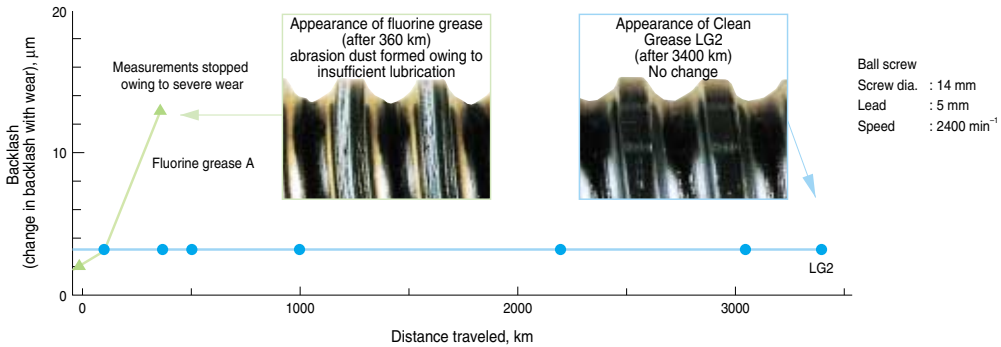

●Feature 3 : Excellent rust prevention capacity

The rust prevention capacity is significantly higher than fluoride type greases. Handling and preparation for operation are easy.

Photo 1-4•2

Ball screw rust prevention test (test conditions : 96 hr at humidity 95%, temperature 70°C)

Clean Grease LG2 | Fluorine grease A | Ordinary grease A

Table 1-4•5 Rust prevention test on bearing

Type	Rusting after 7 days
NSK Clean Grease LG2	No rust
Fluorine grease B	Rusted

Test conditions ●19 mg is sealed in ball bearing 695
●Temp. 90 ℃, Humidity 60%

Evaluation Studied by microscope

● Feature 4 : Stable torque

Torque is 20% or lower than fluorine greases.

Fig. 1-4•7 Comparison of torque characteristics

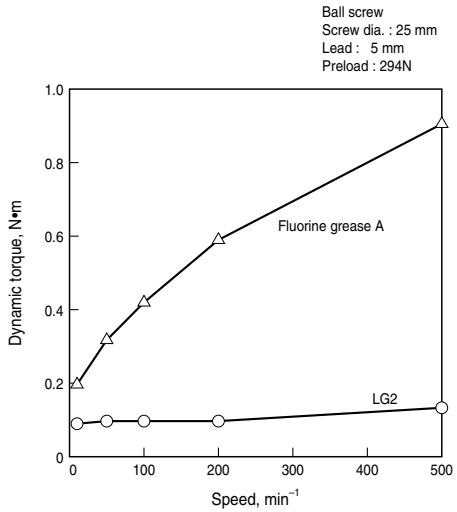

● Total evaluation

Table 1-4•6 Evaluation

Characteristic	LG2	Fluorine grease	General grease
Dust generation	○	○～△	△～×
Torque	○	×	○～△
Durability	○	△～×	○
Rust prevention ability	○	△～×	○

○ : Suitable
△ : Not very suitable
× : Problem in use

3. Environment with foreign matters

● NSK K1 lubrication unit (linear guide and ball screw)

Molded oil is made of a lubrication oil and polyolefin which has affinity with the lubrication oil. More than 70% of the mass is lubrication oil.
Molded oil which is formed into NSK K1 lubrication unit effectively seals linear guides, continually supplying lubrication oil. NSK K1 lubrication unit has made it possible to use linear guides in water or powder dust.
NSK K1 lubrication unit is available for ball screws.

Features

- **Extend maintenance-free intervals**
- **No contamination of surrounding environment**
- **Prolong life of the products exposed to water**

Refer to Page A125 and B419 for details of NSK K1 lubrication unit.

www.bergab.ru Берг АБ bergab@ya.ru Тел. (495)-228-06-21, факс (495) 223-3071

www.bergab.ru Берг АБ bergab@ya.ru Тел. (495)-228-06-21, факс (495) 223-3071

1-5. Table to Cope With Special Environments

1. Linear guides

Table 1-5•1 Availability of linear guides

Series	Model number	Special environment linear guide can tolerate				
		Clean	Vacuum	Corrosion	High temp.	Foreign matters
LH	LH20AN	○	○	○	○	○
	LH20BN	○	○	○	○	○
	LH20FL	○	○	○	○	○
	LH20HL	○	○	○	○	○
	LH20EL	○	○	○	○	○
	LH20GL	○	○	○	○	○
	LH25AN	○	○	○	○	○
	LH25BN	○	○	○	○	○
	LH25FL	○	○	○	○	○
	LH25HL	○	○	○	○	○
	LH25EL	○	○	○	○	○
	LH25GL	○	○	○	○	○
	LH30AN	○	○	○	○	○
	LH30BN	○	○	○	○	○
	LH30FL	○	○	○	○	○
	LH30HL	○	○	○	○	○
	LH30EL	○	○	○	○	○
	LH30GL	○	○	○	○	○
	LH35AN				○	○
	LH35BN				○	○
	LH35FL				○	○
	LH35HL				○	○
	LH35EL				○	○
	LH35GL				○	○
	LH45AN				○	○
	LH45BN				○	○
	LH45FL				○	○
	LH45HL				○	○
	LH45EL				○	○
	LH45GL				○	○
	LH55AN				○	○
	LH55BN				○	○
	LH55FL				○	○
	LH55HL				○	○
	LH55EL				○	○
	LH55GL				○	○

Table 1-5•2 Availability of linear guides

Series	Model number	Special environment linear guide can tolerate				
		Clean	Vacuum	Corrosion	High temp.	Foreign matters
LU	LU09AL	○	○	○	○	○
	LU09TL	○	○	○	○	○
	LU09AR	○	○	○		○
	LU09TR	○	○	○		○
	LU12AL	○	○	○	○	○
	LU12TL	○	○	○	○	○
	LU12AR	○	○	○		○
	LU12TR	○	○	○		○
	LU15AL	○	○	○	○	○
LE	LE09AR	○	○	○		○
	LE09TR	○	○	○		○
	LE12AR	○	○	○	○	○
	LE15AR	○	○	○	○	○
LW	LW17EL				○	○
	LW21EL				○	○
	LW27EL				○	○
	LW35EL					○
LS	LS15CL	○	○	○	○	○
	LS15AL	○	○	○	○	○
	LS15KL	○	○	○	○	○
	LS15FL	○	○	○	○	○
	LS15EL	○	○	○	○	○
	LS20CL	○	○	○	○	○
	LS20AL	○	○	○	○	○
	LS20KL	○	○	○	○	○
	LS20FL	○	○	○	○	○
	LS20EL	○	○	○	○	○
	LS25CL	○	○	○	○	○
	LS25AL	○	○	○	○	○
	LS25KL	○	○	○	○	○
	LS25FL	○	○	○	○	○
	LS25EL	○	○	○	○	○
	LS30CL	○	○	○	○	○
	LS30AL	○	○	○	○	○
	LS30KL	○	○	○	○	○
	LS30FL	○	○	○	○	○
	LS30EL	○	○	○	○	○
	LS35CL					○
	LS35AL					○
	LS35KL					○
	LS35FL					○
	LS35EL					○

2. Ball screws

Clean
Vacuum
Corrosion
} **KA Series**

Clean
Vacuum
Corrosion
High temp.
Foreign matters
} **Custom made ball screws cope with the special requirement. Please consult NSK for details.**

1-6. Precautions for Handling

Please observe the following precautions to maintain high functions of ball screws and linear motion guide bearings in special environment over a long period.

- Products are washed to remove oil, and wrapped in a way to protect them from moisture. Use the product as soon as possible after opening the package.
- After opening, store the ball slide (interchangeable type linear guide) and ball nut (rolled ball screw) in a clean, air-tight container such as desiccater with desiccating agent (e.g. silica gel). Do not apply rust preventive oil or paper or product that vaporizes rust preventive agent.
- Wear plastic gloves and handle product in clean place.

www.bergab.ru Берг АБ bergab@ya.ru Тел. (495)-228-06-21, факс (495) 223-3071

www.bergab.ru Берг АБ bergab@ya.ru Тел. (495)-228-06-21, факс (495) 223-3071

2 Lubrication

There are two types of lubricating method -- grease and oil -- for ball screws and linear guides.
Use a lubricant agent and method most suitable to condition requirements and purpose to optimize functions of the ball screws and linear guides.
In general, lubricants with low base oil kinematic viscosity are used for high speed operation, in which thermal expansion has large impact, and in low temperatures.
Lubrication with high base oil kinematic viscosity is used for oscillating operations, low speed and high temperature.
The following are lubrication methods by grease and by oil.

2-1 Grease Lubrication

Grease lubrication is widely used because it does not require special oil supply system or piping. Grease lubricants made by NSK are:
・Various types of grease in bellowed container which can be instantly attached to the grease pump;
・NSK Grease Unit which comprise a hand grease pump and various nozzles. They are compact and easy to use.

1. NSK grease lubricants

Table 2-1.1 shows the marketed general grease widely used for linear guides and ball screws, in specific uses, conditions and purposes.

Table 2-1•1 Grease lubricant for linear guides and ball screws

Type	Thickener	Base oil	Base oil kinematic viscosity mm²/s (40℃)	Range of use temperature (℃)	Purpose
AS2	Lithium type	Mineral oil	130	−10～110	For ball screws and linear guides for general use at high load.
PS2	Lithium type	Synthetic oil + mineral oil	15	−50～110	For ball screws and linear guides for low temperature and high frequency operation.
LR3	Lithium type	Synthetic oil	30	−30～130	For ball screws at high speed, medium load.
LG2	Lithium type	Synthetic oil + synthetic hydrocarbon oil	30	−10～80	For ball screws and linear guides for clean environment.
LGU	Diurea	Synthetic hydrocarbon oil	100	−30～120	For ball screws and linear guides for clean environment.
NF2	Urea composite type	Synthetic oil + mineral oil	27	−40～100	For fretting resistant ball screws and linear guides.

(1) NSK Grease AS2

● **Features**
It is an environmentally friendly and widely used grease for high load application. It is mineral oil based grease containing lithium thickener and several additives. It is superb in load resistance as well as stability in oxidization. It not only maintains good lubrication over a long period of time, but also demonstrates superb capability in retaining water. Even containing a large amount of water, it does not lose grease when it is softened.
● **Application**
It is a standard grease for general NSK linear guides and ball screws. It is prevalently used in many applications because of its high base oil viscosity, high load resistance, and stability in oxidization. The AS2 has replaced the AV2 grease as the standard grease.

● **Nature**

Thickener	Lithium soap base
Base oil	Mineral oil
Consistency	275
Dropping point	185℃
Volume of evaporation	0.24% (99℃、22hr)
Copper plate corrosion test	Satisfactory (Method B, 100℃, 24hr)
Oil separation	2.8% (100℃、24hr)
Base oil kinematic viscosity	130mm²/s (40℃)

(2) NSK Grease LR3

● **Features**
It contains a special synthetic oil for high temperature and stability, and a carefully selected anti-oxidation agent. This grease dramatically increases lubrication life under high temperature conditions. It is used for high speed, medium load. Lubrication life exceeded 2,000 hours in the endurance test at 150 °C. Its rust prevention capacity in severe conditions such as water and moist environments is further strengthened.
● **Application**
It is a standard grease for NSK standard linear guides and ball screws in FA Series. It is ideal for operation with medium load, at high speed such as positioning in high tact material handling equipment.
(Previous reference number is NSK Grease No.1)

● **Nature**

Thickener	Lithium soap base
Base oil	Mineral oil
Consistency	227
Dropping point	208℃
Volume of evaporation	0.30% (99℃、22hr)
Copper plate corrosion test	Satisfactory (Method B, 100℃, 24hr)
Oil separation	1.9% (100℃、24hr)
Base oil kinematic viscosity	30mm²/s (40℃)

(3) NSK Grease PS2

● **Features**
The major base oil component is synthetic oil with mineral oil. It is an excellent lubrication especially for low temperature operation. It is for high speed and light load.
● **Application**
It is a standard grease for NSK miniature linear guides and ball screws. It is especially superb for low temperature operation, but also functions well in normal temperatures, making it ideal for small equipment with light load.
(Previous reference number is NSK Grease No.3)

● **Nature**

Thickener	Lithium soap base
Base oil	Synthetic oil + mineral oil
Consistency	275
Dropping point	190℃
Volume of evaporation	0.60% (99℃、22hr)
Copper plate corrosion test	Satisfactory (Method B, 100℃, 24hr)
Oil separation	3.6% (100℃、24hr)
Base oil kinematic viscosity	15mm²/s (40℃)

www.bergab.ru Берг АБ bergab@ya.ru Тел. (495)-228-06-21, факс (495) 223-3071

www.bergab.ru Берг АБ bergab@ya.ru Тел. (495)-228-06-21, факс (495) 223-3071

(4) NSK Grease LG2

● Features

This grease was developed by NSK to be exclusively used for linear guides and ball screws in clean room. Compared to the fluorine grease which are commonly used in clean room, LG2 has several advantages such as:

- Higher in lubrication function
- Longer lubrication life
- More stable torque (resistant to wear)
- Higher rust prevention.

In dust generation, LG2 is more than equal to fluorine grease in keeping dust volume low. Since the base oil is not a special oil but a mineral oil, LG2 can be handled in the same manner as general greases.

● Application

LG2 is a lubrication grease for rolling element products such as linear guides and ball screws for semiconductor and liquid crystal display (LCD) processing equipment which require a highly clean environment. Because LG2 is exclusively for a clean environment at normal temperatures, however, it cannot be used in a vacuum environment.

Refer to "Special environment" in Page D8 for detailed data on superb characteristics of NSK Grease LG2.

● Nature

Thickener	Lithium soap base
Base oil	Mineral oil + Synthetic hydrocarbon oil
Consistency	207
Dropping point	200℃
Volume of evaporation	1.40% (99℃、22hr)
Copper plate corrosion test	Satisfactory (Method B, 100℃, 24hr)
Oil separation	0.8% (100℃、24hr)
Base oil kinematic viscosity	30mm²/s (40℃)

(5) NSK Grease LGU

● Features

This is a proprietary urea base grease of NSK featuring low dust emission exclusively for ball screws and linear guides which are used in clean rooms.

In comparison with fluorine base grease, which has been used commonly in clean rooms, LGU has better lubricating property, longer duration of lubricant, better torque variation, much better anti-rust property, and equivalent or better dust emission. In addition, this grease can be handled in the same way as the other common grease because high-grade synthetic oil is used as the base oil.

LGU grease contains much less metallic elements compared to LG2 grease. It can be used in high temperature environment.

● Application

This is exclusive lubrication grease for ball screws and linear guides that are installed in equipment that requires cleanliness, as same as LG2 grease, and it can be used in high temperature range of –30° to 180°C.

This cannot be used in vacuum.

● Nature

Thickener	Diurea
Base oil	Synthetic hydrocarbon oil
Consistency	209
Dropping point	260℃
Volume of evaporation	0.09% (99℃、22hr)
Copper plate corrosion test	Satisfactory (Method B, 100℃, 24hr)
Oil separation	0.6% (100℃、24hr)
Base oil kinematic viscosity	100mm²/s (40℃)

(6) NSK Grease NF2

● Features

It uses high-grade synthetic oil as the base oil and urea base organic compound as the thickener. It has remarkable anti-fretting corrosion property. It can be used in wide temperature range, from low to high, and has superior lubrication life.

● Application

This grease suites for ball screws and linear guides of which application include oscillating operations. Allowable temperature range is –40° to 130°C.

● Nature

Thickener	Diurea
Base oil	Synthetic hydrocarbon oil
Consistency	288
Dropping point	269℃
Volume of evaporation	7.9% (177℃、22hr)
Copper plate corrosion test	Satisfactory (Method B, 100℃, 24hr)
Oil separation	0.6% (100℃、24hr)
Base oil kinematic viscosity	27mm²/s (40℃)

● Precautions for handling

- Wash the linear guides and ball screws to remove oil prior to applying Clean Grease LG2 or LGU, so the grease functions are fully utilized.
- Clean grease is exclusively used for clean environments at normal temperatures.

2. How to replenish grease

Use grease fitting to linear guide ball slide or to ball screw nut if exclusive grease supply component is not used. Supply required amount to grease fitting by a grease gun (pump).

Wipe off old grease and accumulated dust before supplying new grease. If grease fitting is not used, apply grease directly to the rail or to the ball groove of the screw shaft. Remove the seal if possible, and move a ball slide or ball nut few strokes so the grease permeates into the ball slide and inside the nut. A hand grease pump, an exclusive and easy lubrication device to linear guides and ball screws, is available at NSK.

3. Volume of grease to be replenished

Once grease is replenished, another supply is not required for a long period of time. But under some operational conditions, it is necessary to periodically replenish grease. The following are replenishing methods.

* When there is an exclusive grease supply system and the volume from the spout can be controlled, the criterion is:

・All at once, replenish the amount which fills about 50% of the internal space of the ball slide, or the internal space of the ball nut. This method eliminates waste of grease, and is efficient.

Tables 2-1.2 and 3 show internal spaces of ball slide and ball nut for reference.

* When replenishing using a grease gun:

Use a grease gun and fill the inside of ball slide and the ball nut with grease. Supply grease until it comes out from the ball slide or ball nut area. Move the ball slide or ball nut by hand while filling them with grease, so the grease permeates all areas. Do not operate the machine immediately after replenishing. Always try the system a few times to spread the grease throughout the system and to remove excess grease from inside. Trial operations are necessary because the resistance to sliding force of linear guide and the ball screw torque greatly increase immediately after replenishment (full-pack state) and may cause problems. Grease's agitating resistance is accountable for this phenomenon. Wipe off excess grease that accumulates at the end of the rail and screw shaft after trial runs, so the grease does not scatter to other areas.

www.bergab.ru Берг АБ bergab@ya.ru Тел. (495)-228-06-21, факс (495) 223-3071

www.bergab.ru Берг АБ bergab@ya.ru Тел. (495)-228-06-21, факс (495) 223-3071

Table 2-1•2 Inside space of the ball slide of linear guide

LS, LH Series Unit: cm³

Series / Model number	LH		LS	
	High load type	Ultra-high load type	Medium load type	High load type
15	3	4	2	3
20	6	8	3	4
25	9	13	5	8
30	13	20	8	12
35	22	30	12	19
45	47	59	—	—
55	80	100	—	—
65	139	186	—	—
85	—	336	—	—

LY, LA Series Unit: cm³

Series / Model number	LY		LA	
	High load type	Ultra-high load type	High load type	Ultra-high load type
15	1	—	—	—
20	2	3	—	—
25	4	5	8	12
30	7	8	14	18
35	11	13	21	29
45	17	22	38	48
55	36	45	68	86
65	70	96	130	177

LW Series Unit: cm³

Series / Model number	LW
17	3
21	3
27	7
35	24
50	52

LE, LU Series Unit: cm³

Series / Model number	LE	LU	
		Standard type	Long type
05	—	0.1	—
07	0.2	0.1	—
09	0.4	0.2	0.3
12	0.5	0.3	0.4
15	1.2	0.8	1.1

Table 2-1•3 Inside space of ball nut

Return tube type (single nut) Unit: cm³

Nut model	Inside space	Nut model	Inside space	Nut model	Inside space	Nut model	Inside space
1004—2.5	0.8	2005—5	4.3	2525—1.5	7.5	4005—10	14
1205—2.5	1.2	2010—2.5	4.7	2805—5	6	4010—5	30
1210—2.5	1.4	2020—1.5	4.2	3205—5	7	4012—5	34
1405—2.5	2.2	2504—5	3.2	3206—5	9.5	4510—5	34
1510—2.5	2.3	2505—5	5	3210—5	22	5010—5	37
1605—2.5	2.6	2506—5	7	3225—2.5	17	5010—10	59
1616—1.5	2.1	2510—3	9.5	3232—1.5	15		
2004—5	2.7	2520—2.5	12	3610—5	32		

Deflector type (single nut) Unit: cm³

Nut model	Inside space
2505—6	6.5
2510—4	10
3205—8	9.5
3210—6	28
4010—8	42
5010—8	52

End cap type Unit: cm³

Nut model	Inside space
1520—1.5	1.9
2040—1	2.8
2550—1	4.2

Remarks: Nut model: shaft diameter, lead, total number of turns of balls
Please consult NSK for other specifications.

4. Intervals of checks and replenishments

Although the grease is of high quality, it gradually deteriorates and its lubrication function diminishes. Also, the grease in the ball slide and ball nut is gradually removed by stroke movement. In some environments, the grease becomes dirty, and foreign objects may enter. New grease should be replenished depending on frequency of use. The following is a guide of intervals of grease replenishments to linear guides and ball screws.

Table 2-1•4 Intervals of checks and replenishments for grease lubrication

Intervals of checks	Items to check	Intervals of replenishments
3-6 months	Dirt, foreign matters such as cutting chip	Usually once per year. Every 3000 km for material handling system which travels more than 3000 km per year. Replenish if checking results warrant it necessary.

*1) As a general rule, do not mix greases of different brands. Grease structure may be destroyed if greases of different thickeners are mixed. Even when greases have the same thickener, different additives in them may have an adverse effect on each other.

*2) Grease viscosity varies by temperature. Viscosity is particular high in winter due to low temperature. Pay attention to increase in linear guide's sliding resistance and ball screw torque in such occasion.

www.bergab.ru Берг АБ bergab@ya.ru Тел. (495)-228-06-21, факс (495) 223-3071

www.bergab.ru Берг АБ bergab@ya.ru Тел. (495)-228-06-21, факс (495) 223-3071

2-2 Oil Lubrication

Required amount of new oil is regularly supplied by:
・Manual or automatic intermittent supply system;
・Oil mist lubricating system via piping.

Equipment for oil lubrication is more costly than grease lubrication. However, oil mist lubricating system supplies air as well as oil, raising the inner pressure of the ball slide. This prevents foreign matters from entering, and the air cools the system. Use an oil of high atomizing rate such as ISO VG 32-68 for the oil mist lubrication system.

ISO VG 68-220 are recommended for common intermittent replenishment system. Approximate volume of oil Q for a ball slide of linear guide per hour can be obtained by the following formula.

$Q = n/150$ (cm³/hr)

n: Linear guide code

e.g. When LH45 is used,

Therefore,

$Q = 45/150 = 0.3$ cm³/hr

Similarly, approximate oil supply volume Q to ball screw can be obtained by the following formula.

$Q = d/15$ (cm³/hr)

d: Nominal shaft diameter of the ball screw

e.g. When the shaft diameter is 50,

$d = 50$

Therefore,

$Q = 50/15 = 3.3$ cm³/hr

For oil lubrication by gravity dripping, the oil supply position and installation attitude of the ball slide or ball nut are crucial. In case of linear guide, unless it is installed to a horizontal position, the oil flows only on the down side, and does not spread to all ball grooves. This may cause insufficient lubrication. For ball screw lubrication as well, oil does not spread if the oil orifice is installed at the bottom, causing insufficient lubrication. Please consult NSK to correct such situations prior to use. NSK has internal design which allows oil lubricant flows throughout the system. Table 2-2.1 shows the criterion of intervals of oil checks and replenishments.

Table 2-2•1 Intervals of checks and replenishments

Method	Intervals of checks	Items to check	Replenishment or intervals of changes
Automatic intermittent supply	Weekly	Volume of oil, dirt, etc.	Replenish at each check. Suitable volume for tank capacity.
Oil bath	Daily before operation	Oil surface	Make a suitable criterion based on consumption

*1) As with grease lubrication, do not mix oil lubricant with different types.

*2) Some components of the linear guide and ball screw are made of plastic. Avoid using an oil that adversely affects synthetic resin.

2-3 NSK Grease Unit

supply grease to NSK linear guides and ball screws by a manual type hand grease pump. Install the grease in bellows tube to the pump. Several types of grease (80 g) are available.

Grease in a bellows tube

1. Composition of NSK Grease Unit

Components and grease types are shown below.

	Name	(tube type)	Reference number
NSK Grease Unit			
NSK Grease (80 g in a bellows tube)	NSK Grease AS2	(Brown)	NSK GRS AS2
	NSK Grease PS2	(Orange)	NSK GRS PS2
	NSK Grease LR3	(Green)	NSK GRS LR3
	NSK Grease LG2	(Blue)	NSK GRS LG2
	NSK Grease LGU	(Yellow)	NSK GRS LGU
NSK Hand Grease Pump Unit			
NSK Hand Grease Pump (Straight nozzle NSK HGP NZ1 -- One nozzle is provided with the hand pump.)			NSK HGP
Grease nozzle (used with the hand grease pump)			
	NSK straight nozzle		NSK HGP NZ1
	NSK chuck nozzle		NSK HGP NZ2
	NSK drive fitting nozzle		NSK HGP NZ3
	NSK point nozzle		NSK HGP NZ4
	NSK flexible nozzle		NSK HGP NZ5
	NSK flexible extension pipe		NSK HGP NZ6
	NSK straight extension pipe		NSK HGP NZ7

www.bergab.ru Берг АБ bergab@ya.ru Тел. (495)-228-06-21, факс (495) 223-3071

www.bergab.ru Берг АБ bergab@ya.ru Тел. (495)-228-06-21, факс (495) 223-3071

2. NSK Greases (80 g in a bellows tube)

Refer to Page C14 for their natures and details.

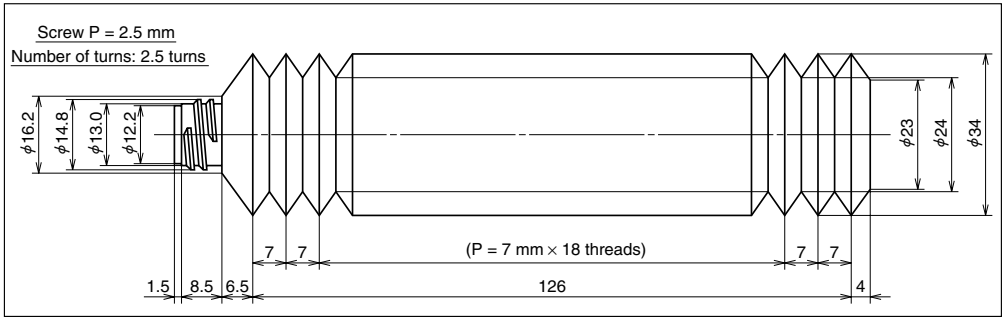

Fig. 2-3•1 Bellows tube

3. NSK manual Grease Pump Unit

(1) NSK Hand Grease Pump Unit (Reference number: NSK HGP)

● **Features**

- Light-weight ····· Can be operated by one hand, yet there is no worry to making a mistake.
- Inserting by high pressure···· Insert at 15 Mpa.
- No leaking ····· Does not leak when held upside down.
- Easy to change grease ···· Simply attach the grease in bellows tube.
- Remaining grease ····· Can be confirmed through slit on the tube.
- Several nozzles ····· Five types of nozzles to choose from.

● **Specifications**

- Spout volume ····· 0.35 g/stroke
- Mass of main body ··· 393 g
- Overall length ····· About 200 mm
- Overall width····· About 200 mm
- Grease tube outer diameter ·· ϕ38.1
- Accessory····· Several nozzles for a unique application can be attached

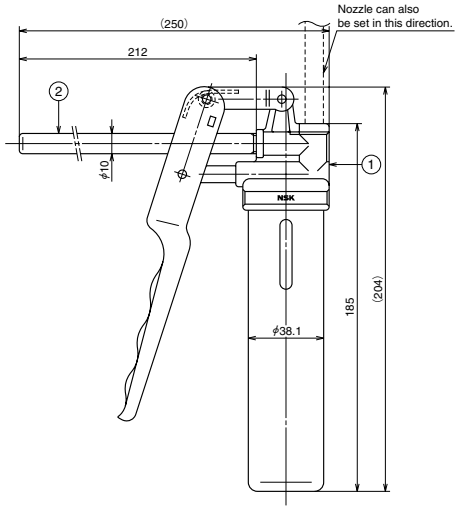

Fig. 2-3•2 NSK Hand Grease Pump with NSK straight nozzle

(2) Nozzles

Table 2-3•1 Nozzles that can be attached to NSK Hand Grease Pump

Name	Designation code	Use	Dimensions
NSK straight nozzle	NSK HGP NZ1	Can be used with grease fitting A, B, and C under JIS B1575 standard.	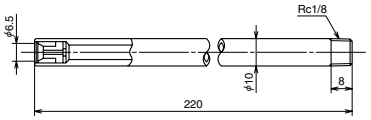
NSK chuck nozzle	NSK HGP NZ2	Same as above. However, there is no need to press the hand pump because the grease fitting and the nozzle come to contact due to the chucking mechanism at the tip.	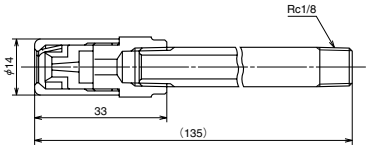
NSK fitting nozzle	NSK HGP NZ3	Dedicated for the -ϕ3 drive-in grease fitting.	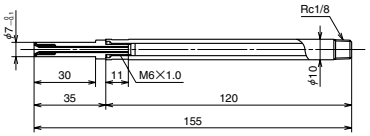
NSK point nozzle	NSK HGP NZ4	Used for linear guides and ball screws which do not have grease fitting. Supplies grease directly to the ball grooves, or through the opening of ball slide or ball slide to inside.	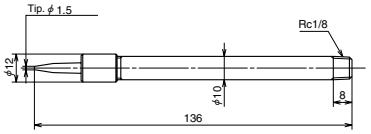
NSK flexible nozzle	NSK HGP NZ5	The tip of the flexible nozzle is chuck nozzle. Used to supply grease to the area where hand cannot reach.	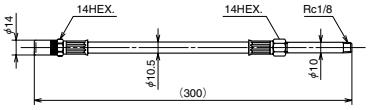
NSK flexible extension pipe	NSK HGP NZ6	Flexible extension pipe connects the grease pump and the nozzle	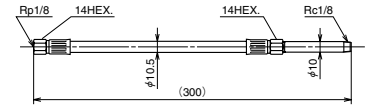
NSK straight extension pipe	NSK HGP NZ7	Straight extension pipe connects the grease pump and the nozzle.	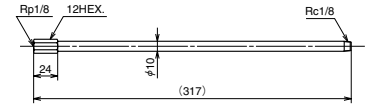

www.bergab.ru Берг АБ bergab@ya.ru Тел. (495)-228-06-21, факс (495) 223-3071

rgab.ru Берг АБ bergab@ya.ru Тел. (495)-228-06-21, факс (495) 2

Table 2-3•2 Grease fittings used for NSK linear guide

Linear guide model	Tap hole for grease fitting	Standard grease fitting	Straight nozzle NZ1	Chuck nozzles (two) NZ	Drive-in nipple nozzle NZ3	Point nozzle NZ4	Flexible nozzle NZ5
LS15	ϕ3	Drive-in type			○		
LS20～35 *1)	M6×0.75	B type	○	○			○
LH15	ϕ3	Drive-in type			○		
LH20～35 *1)	M6×0.75	B type	○	○			○
LH45～85	Rc1／8	B type	○	○			○
LA25～35	M6×0.75	B type	○	○			○
LA45～65	Rc1／8	B type	○	○			○
LY15,20	ϕ3	Drive-in type			○		
LY25～35 *1)	M6×0.75	B type	○	○			○
LY45～65	Rc1／8	B type	○	○			○
LW17	ϕ3	Drive-in type			○		
LW21～35	M6×0.75	B type	○	○			○
LW50	Rc1／8	B type	○	○			○
LU05～15	—	None				○ *2)	
LE05～15	—	None				○ *2)	

*1) LS20, LS25, LH20, LY25, LY30: Use straight nozzle. (Point nozzle tip cannot be used because it interfere with the rail top surface.)

*2) LU and LE Series: Apply grease directly to ball groove, etc. using a point nozzle.

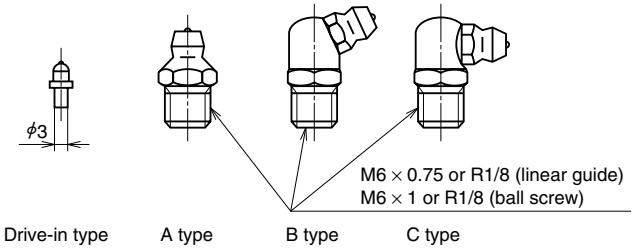

Fig. 2-3•3 Grease fittings

Remarks : Normally, grease fitting is not provided to NSK ball screw. However, ball nut has a tap hole to install a grease fitting. The user should install a grease fitting if necessary. If there is no tap hole, apply grease directly to the screw shaft and ball grooves.

rgab.ru Берг АБ bergab@ya.ru Тел. (495)-228-06-21, факс (495) 2

rgab.ru Берг АБ bergab@ya.ru Тел. (495)-228-06-21, факс (495) 2

APPENDICES: TABLES AND PRODUCT INDEX

E

Appendices: Tables and Product Index

1 Tables

1. Conversion from International Systems of Units (SI) ····· E1
2. Conversion table between N and kgf ····· E3
3. Conversion table between kg and lb ····· E4
4. Hardness conversion table · E5
5. Variations of shaft used in common fits ····· E7
6. Variations of housing holes in common fits ····· E9

2 Product index ····· E11

rgab.ru Берг АБ bergab@ya.ru Тел. (495)-228-06-21, факс (495) 2

www.bergab.ru Берг АБ bergab@ya.ru Тел. (495)-228-06-21, факс (495) 223-3071

1 Attachment: Tables

1. Conversion from international system of units (SI)

Comparisons of SI, CGS, and engineering systems of units

Items / System of units	Length	Mass	Time	Temperature	Acceleration	Force	Stress	Pressure	Energy	Power
SI	m	kg	s	K, ℃	m/s²	N	Pa	Pa	J	W
CGS system	cm	g	s	℃	Gal	dyn	dyn/cm²	dyn/cm²	erg	erg/s
Engineering system	m	kgf・s²/m	s	℃	m/s²	kgf	kgf/m²	kgf/m²	kgf・m	kgf・m/s

Prefixes for SI units

Powers of 10	Prefix Name	Prefix Code	Powers of 10	Prefix Name	Prefix Code
10^{18}	exa	E	10^{-1}	deci	d
10^{15}	peta	P	10^{-2}	centi	c
10^{12}	tera	T	10^{-3}	milli	m
10^{9}	giga	G	10^{-6}	micro	μ
10^{6}	mega	M	10^{-9}	nano	n
10^{3}	kilo	k	10^{-12}	pico	p
10^{2}	hecto	h	10^{-15}	femto	f
10^{1}	deca	da	10^{-18}	atto	a

Conversion rates from SI system of units

Item	SI unit: Name of unit	SI unit: Abbreviation	Units other than SI units: Name of unit	Units other than SI units: Abbreviation	Conversion rate from SI unit
Angle	Radian	rad	Degree	°	180/π
			Minute	′	10 800/π
			Second	″	648 000/π
Length	Meter	m	Micron	μ	10^6
			Angstrom	Å	10^{10}
Area	Square meter	m²	Are	a	10^{-2}
			Hectare	ha	10^{-4}
Volume	Cubic meter	m³	Liter	l, L	10^3
			Deciliter	dl, dL	10^4
Time	Second	s	Minute	min	1/60
			Hour	h	1/3 600
			Day	d	1/86 400
Numbers of vibration numbers of frequency	Hertz	Hz	Cycle	s^{-1}	1
Rotational speed	Times per second	s^{-1}	Times per minute	rpm	60
Velocity	Meter per second	m/s	Kilometer per hour	km/h	3 600/1 000
			Knot	kn	3 600/1 852
Acceleration	Meter per square second	m/s²	Gal	Gal	10^2
			G	G	1/9.806 65
Mass	Kilogram	kg	Ton	t	10^{-3}
Force	Newton	N	Weight kilogram	kgf	1/9.806 65
			Weight ton	tf	1/（9.806 65×10³）
			Dyne	dyn	10^5
Torque and moment of force	Newton meter	N・m	Weight kilogram meter	kgf・m	1/9.806 65
Stress	Pascal (Newtons per square meter)	Pa (N/m²)	Weight kilogram per square centimeter	kgf/cm²	1/（9.806 65×10⁴）
			Weight kilogram per square millimeter	kgf/mm²	1/（9.806 65×10⁶）

Conversion rates from SI units (continued from previous page)

Item	SI unit: Name of unit	SI unit: Abbreviation	Units other than SI units: Name of unit	Units other than SI units: Abbreviation	Conversion rate from SI unit
Pressure	Pascal (newton per square meter)	Pa (N/m²)	Weight kilogram per square meter	kgf/m²	1/9.806 65
			Water column meter	mH_2O	1/（9.806 65×10³）
			Mercurial column millimeter	mmHg	760/（1.013 25×10⁵）
			Torr	Torr	760/（1.013 25×10⁵）
			Bar	bar	10^{-5}
			Atmosphere	atm	1/（1.013 25×10⁵）
Energy	Joule (newton meter)	J (N・m)	Erg	erg	10^7
			Calorie (international)	cal_{IT}	1/4.186 8
			Weight kilogram meter	kgf・m	1/9.806 65
			Kilowatt hour	kW・h	1/（3.6×10⁶）
			Metric horsepower/hour	PS・h	≈3.776 72×10⁻⁷
Electric power, power	Watt (joules per second)	W (J/s)	Weight kilogram meter per second	kgf・m/s	1/9.806 65
			Kilo calorie per hour	kcal/h	1/1.163
			Metric horsepower	PS	≈1/735.498 8
Viscosity, Viscosity index	Pascal second	Pa・s	Poise	P	10
Kinematic viscosity, Kinematic viscosity index	Square meter per second	m²/s	Stokes	St	10^4
			Centistokes	cSt	10^6
Temperature, Difference in temperature	Kelvin, Celsius degrees	K, ℃	Degree	℃	[See Note (1)]
Electrical current, magnetomotive force	Ampere	A	Ampere	A	1
Electrical power, electromotive force	Volt	V	(Watt per ampere)	(W/A)	1
Magnetic field intensity	Ampere per meter	A/m	Oersted	Oe	4π/10³
Magnetic flux density	Tesla	T	Gauss	Gs	10^4
			Gamma	γ	10^9
Electrical resistance	Ohm	Ω	(Volt per ampere)	(V/A)	1

Note (1) Conversion from TK to θ℃ is : $\theta = T - 273.15$. To indicate temperature difference: $\Delta T = \Delta\theta$. ΔT and $\Delta\theta$ indicate temperature differences measured by Kelvin and Celsius respectively.

Remarks: Names and abbreviations of the unit in parentheses indicate the definition of the unit shown above the parentheses or left to the parentheses.

Conversion example 1N = 1/9.806 65 kgf

www.bergab.ru Берг АБ bergab@ya.ru Тел. (495)-228-06-21, факс (495) 223-3071

www.bergab.ru Берг АБ bergab@ya.ru Тел. (495)-228-06-21, факс (495) 223-3071

2. Conversion table between N and kgf

[How to read the table]
To convert 10N to kgf, locate 10 in the center column in the first block. Locate a corresponding kgf figure in the right side column. You will find 10N is 1.0197 kgf. To convert 10 kgf to N, locate a figure in N column to its left. You will find 10 kgf is 98.006N.

1 N =0.1019716 kgf
1 kgf =9.80665 N

N		kgf	N		kgf	N		kgf
9.8066	1	0.1020	333.43	34	3.4670	657.05	67	6.8321
19.613	2	0.2039	343.23	35	3.5690	666.85	68	6.9341
29.420	3	0.3059	353.04	36	3.6710	676.66	69	7.0360
39.227	4	0.4079	362.85	37	3.7729	686.47	70	7.1380
49.033	5	0.5099	372.65	38	3.8749	696.27	71	7.2400
58.840	6	0.6118	382.46	39	3.9769	706.08	72	7.3420
68.647	7	0.7138	392.27	40	4.0789	715.89	73	7.4439
78.453	8	0.8158	402.07	41	4.1808	725.69	74	7.5459
88.260	9	0.9177	411.88	42	4.2828	735.50	75	7.6479
98.066	10	1.0197	421.69	43	4.3848	745.31	76	7.7498
107.87	11	1.1217	431.49	44	4.4868	755.11	77	7.8518
117.68	12	1.2237	441.30	45	4.5887	764.92	78	7.9538
127.49	13	1.3256	451.11	46	4.6907	774.73	79	8.0558
137.29	14	1.4279	460.91	47	4.7927	784.53	80	8.1577
147.10	15	1.5296	470.72	48	4.8946	794.34	81	8.2597
156.91	16	1.6315	480.53	49	4.9966	804.15	82	8.3617
166.71	17	1.7335	490.33	50	5.0986	813.95	83	8.4636
176.52	18	1.8355	500.14	51	5.2006	823.76	84	8.5656
186.33	19	1.9375	509.95	52	5.3025	833.57	85	8.6676
196.13	20	2.0394	519.75	53	5.4045	843.37	86	8.7696
205.94	21	2.1414	529.56	54	5.5065	853.18	87	8.8715
215.75	22	2.2434	539.37	55	5.6084	862.99	88	8.9735
225.55	23	2.3453	549.17	56	5.7104	872.79	89	9.0755
235.36	24	2.4473	558.98	57	5.8124	882.60	90	9.1774
245.17	25	2.5493	568.79	58	5.9144	892.41	91	9.2794
254.97	26	2.6513	578.59	59	6.0163	902.21	92	9.3814
264.78	27	2.7532	588.40	60	6.1183	912.02	93	9.4834
274.59	28	2.8552	598.21	61	6.2203	921.83	94	9.5853
284.39	29	2.9572	608.01	62	6.3222	931.63	95	9.6873
294.20	30	3.0591	617.82	63	6.4242	941.44	96	9.7893
304.01	31	3.1611	627.63	64	6.5262	951.25	97	9.8912
313.81	32	3.2631	637.43	65	6.6282	961.05	98	9.9932
323.62	33	3.3651	647.24	66	6.7301	970.86	99	10.095

3. Conversion table between kg and lb

[How to read the table]
To convert 10 kg to lb, locate 10 in the center column in the first block. Locate a corresponding lb figure in right column. You will find 10 kg is 22.046 lb. To convert 10 lb to kg, locate the figure in the kg column to the left. You will find 10 lb is 4.536 kg.

1 kg =2.2046226 lb
1 lb =0.45359237 kg

kg		lb	kg		lb	kg		lb
0.454	1	2.205	15.422	34	74.957	30.391	67	147.71
0.907	2	4.409	15.876	35	77.162	30.844	68	149.91
1.361	3	6.614	16.329	36	79.366	31.298	69	152.12
1.814	4	8.818	16.783	37	81.571	31.751	70	154.32
2.268	5	11.023	17.237	38	83.776	32.205	71	156.53
2.722	6	13.228	17.690	39	85.980	32.659	72	158.73
3.175	7	15.432	18.144	40	88.185	33.112	73	160.94
3.629	8	17.637	18.597	41	90.390	33.566	74	163.14
4.082	9	19.842	19.051	42	92.594	34.019	75	165.35
4.536	10	22.046	19.504	43	94.799	34.473	76	167.55
4.990	11	24.251	19.958	44	97.003	34.927	77	169.76
5.443	12	26.455	20.412	45	99.208	35.380	78	171.96
5.897	13	28.660	20.865	46	101.41	35.834	79	174.17
6.350	14	30.865	21.319	47	103.62	36.287	80	176.37
6.804	15	33.069	21.772	48	105.82	36.741	81	178.57
7.257	16	35.274	22.226	49	108.03	37.195	82	180.78
7.711	17	37.479	22.680	50	110.23	37.648	83	182.98
8.165	18	39.683	23.133	51	112.44	38.102	84	185.19
8.618	19	41.888	23.587	52	114.64	38.555	85	187.39
9.072	20	44.092	24.040	53	116.84	39.009	86	189.60
9.525	21	46.297	24.494	54	119.05	39.463	87	191.80
9.979	22	48.502	24.948	55	121.25	39.916	88	194.01
10.433	23	50.706	25.401	56	123.46	40.370	89	196.21
10.886	24	52.911	25.855	57	125.66	40.823	90	198.42
11.340	25	55.116	26.308	58	127.87	41.277	91	200.62
11.793	26	57.320	26.762	59	130.07	41.730	92	202.83
12.247	27	59.525	27.216	60	132.28	42.184	93	205.03
12.701	28	61.729	27.669	61	134.48	42.638	94	207.23
13.154	29	63.934	28.123	62	136.69	43.091	95	209.44
13.608	30	66.139	28.576	63	138.89	43.545	96	211.64
14.061	31	68.343	29.030	64	141.10	43.998	97	213.85
14.515	32	70.548	29.484	65	143.30	44.452	98	216.05
14.969	33	72.753	29.937	66	145.51	44.906	99	218.26

www.bergab.ru Берг АБ bergab@ya.ru Тел. (495)-228-06-21, факс (495) 223-3071

www.bergab.ru Берг АБ bergab@ya.ru Тел. (495)-228-06-21, факс (495) 223-3071

4. Conversion table of hardness

Rockwell C Scale hardness (1 471N)	Vickers hardness	Brinell hardness Standard ball	Brinell hardness Tungsten carbide ball	Rockwell hardness A Scale Load 588.4N brale penetrator	Rockwell hardness B Scale Load 980.7N Diameter 1.5888 mm {1/16 in} sphere	Shore hardness
68	940	—	—	85.6	—	97
67	900	—	—	85.0	—	95
66	865	—	—	84.5	—	92
65	832	—	739	83.9	—	91
64	800	—	722	83.4	—	88
63	772	—	705	82.8	—	87
62	746	—	688	82.3	—	85
61	720	—	670	81.8	—	83
60	697	—	654	81.2	—	81
59	674	—	634	80.7	—	80
58	653	—	615	80.1	—	78
57	633	—	595	79.6	—	76
56	613	—	577	79.0	—	75
55	595	—	560	78.5	—	74
54	577	—	543	78.0	—	72
53	560	—	525	77.4	—	71
52	544	500	512	76.8	—	69
51	528	487	496	76.3	—	68
50	513	475	481	75.9	—	67
49	498	464	469	75.2	—	66
48	484	451	455	74.7	—	64
47	471	442	443	74.1	—	63
46	458	432	432	73.6	—	62
45	446	421	421	73.1	—	60
44	434	409	409	72.5	—	58
43	423	400	400	72.0	—	57
42	412	390	390	71.5	—	56
41	402	381	381	70.9	—	55
40	392	371	371	70.4	—	54
39	382	362	362	69.9	—	52

Rockwell C Scale hardness (1 471N)	Vickers hardness	Brinell hardness Standard ball	Brinell hardness Tungsten carbide ball	Rockwell hardness A Scale Load 588.4N brale penetrator	Rockwell hardness B Scale Load 980.7N Diameter 1.5888 mm {1/16 in} sphere	Shore hardness
38	372	353	353	69.4	—	51
37	363	344	344	68.9	—	50
36	354	336	336	68.4	(109.0)	49
35	345	327	327	67.9	(108.5)	48
34	336	319	319	67.4	(108.0)	47
33	327	311	311	66.8	(107.5)	46
32	318	301	301	66.3	(107.0)	44
31	310	294	294	65.8	(106.0)	43
30	302	286	286	65.3	(105.5)	42
29	294	279	279	64.7	(104.5)	41
28	286	271	271	64.3	(104.0)	41
27	279	264	264	63.8	(103.0)	40
26	272	258	258	63.3	(102.5)	38
25	266	253	253	62.8	(101.5)	38
24	260	247	247	62.4	(101.0)	37
23	254	243	243	62.0	100.0	36
22	248	237	237	61.5	99.0	35
21	243	231	231	61.0	98.5	35
20	238	226	226	60.5	97.8	34
(18)	230	219	219	—	96.7	33
(16)	222	212	212	—	95.5	32
(14)	213	203	203	—	93.9	31
(12)	204	194	194	—	92.3	29
(10)	196	187	187	—	90.7	28
(8)	188	179	179	—	89.5	27
(6)	180	171	171	—	87.1	26
(4)	173	165	165	—	85.5	25
(2)	166	158	158	—	83.5	24
(0)	160	152	152	—	81.7	24

www.bergab.ru Берг АБ bergab@ya.ru Тел. (495)-228-06-21, факс (495) 223-3071

www.bergab.ru Берг АБ bergab@ya.ru Тел. (495)-228-06-21, факс (495) 223-3071

5. Deviations of shafts used in common fits

Unit: μm

Classification of diameter (mm) Over	or less	d6	e6	f6	g5	g6	h5	h6	h7	h8	h9	h10	js5	js6
3	6	−30 −38	−20 −28	−10 −18	−4 −9	−4 −12	0 −5	0 −8	0 −12	0 −18	0 −30	0 −48	±2.5	±4
6	10	−40 −49	−25 −34	−13 −22	−5 −11	−5 −14	0 −6	0 −9	0 −15	0 −22	0 −36	0 −58	±3	±4.5
10	18	−50 −61	−32 −43	−16 −27	−6 −14	−6 −17	0 −8	0 −11	0 −18	0 −27	0 −43	0 −70	±4	±5.5
18	30	−65 −78	−40 −53	−20 −33	−7 −16	−7 −20	0 −9	0 −13	0 −21	0 −33	0 −52	0 −84	±4.5	±6.5
30	50	−80 −96	−50 −66	−25 −41	−9 −20	−9 −25	0 −11	0 −16	0 −25	0 −39	0 −62	0 −100	±5.5	±8
50	80	−100 −119	−60 −79	−30 −49	−10 −23	−10 −29	0 −13	0 −19	0 −30	0 −46	0 −74	0 −120	±6.5	±9.5
80	120	−120 −142	−72 −94	−36 −58	−12 −27	−12 −34	0 −15	0 −22	0 −35	0 −54	0 −87	0 −140	±7.5	±11
120	180	−145 −170	−85 −110	−43 −68	−14 −32	−14 −39	0 −18	0 −25	0 −40	0 −63	0 −100	0 −160	±9	±12.5
180	250	−170 −199	−100 −129	−50 −79	−15 −35	−15 −44	0 −20	0 −29	0 −46	0 −72	0 −115	0 −185	±10	±14.5
250	315	−190 −222	−110 −142	−56 −88	−17 −40	−17 −49	0 −23	0 −32	0 −52	0 −81	0 −130	0 −210	±11.5	±16
315	400	−210 −246	−125 −161	−62 −98	−18 −43	−18 −54	0 −25	0 −36	0 −57	0 −89	0 −140	0 −230	±12.5	±18
400	500	−230 −270	−135 −175	−68 −108	−20 −47	−20 −60	0 −27	0 −40	0 −63	0 −97	0 −155	0 −250	±13.5	±20
500	630	−260 −304	−145 −189	−76 −120	—	−22 −66	—	0 −44	0 −70	0 −110	0 −175	0 −280	—	±22
630	800	−290 −340	−160 −210	−80 −130	—	−24 −74	—	0 −50	0 −80	0 −125	0 −200	0 −320	—	±25
800	1000	−320 −376	−170 −226	−86 −142	—	−26 −82	—	0 −56	0 −90	0 −140	0 −230	0 −360	—	±28
1000	1250	−350 −416	−195 −261	−98 −164	—	−28 −94	—	0 −66	0 −105	0 −165	0 −260	0 −420	—	±33
1250	1600	−390 −468	−220 −298	−110 −188	—	−30 −108	—	0 −78	0 −125	0 −195	0 −310	0 −500	—	±39
1600	2000	−430 −522	−240 −332	−120 −212	—	−32 −124	—	0 −92	0 −150	0 −230	0 −370	0 −600	—	±46

j5	j6	j7	k5	k6	k7	m5	m6	n6	p6	r6	r7	Classification of diameter (mm) Over	or less
+3 −2	+6 −2	+8 −4	+6 +1	+9 +1	+13 +1	+9 +4	+12 +4	+16 +8	+20 +12	+23 +15	+27 +15	3	6
+4 −2	+7 −2	+10 −5	+7 +1	+10 +1	+16 +1	+12 +6	+15 +6	+19 +10	+24 +15	+28 +19	+34 +19	6	10
+5 −3	+8 −3	+12 −6	+9 +1	+12 +1	+19 +1	+15 +7	+18 +7	+23 +12	+29 +18	+34 +23	+41 +23	10	18
+5 −4	+9 −4	+13 −8	+11 +2	+15 +2	+23 +2	+17 +8	+21 +8	+28 +15	+35 +22	+41 +28	+49 +28	18	30
+6 −5	+11 −5	+15 −10	+13 +2	+18 +2	+27 +2	+20 +9	+25 +9	+33 +17	+42 +26	+50 +34	+59 +34	30	50
+6 −7	+12 −7	+18 −12	+15 +2	+21 +2	+32 +2	+24 +11	+30 +11	+39 +20	+51 +32	+60 +41	+71 +41	50	65
										+62 +43	+73 +43	65	80
+6 −9	+13 −9	+20 −15	+18 +3	+25 +3	+38 +3	+28 +13	+35 +13	+45 +23	+59 +37	+73 +51	+86 +51	80	100
										+76 +54	+89 +54	100	120
+7 −11	+14 −11	+22 −18	+21 +3	+28 +3	+43 +3	+33 +15	+40 +15	+52 +27	+68 +43	+88 +63	+103 +63	120	140
										+90 +65	+105 +65	140	160
										+93 +68	+108 +68	160	180
+7 −13	+16 −13	+25 −21	+24 +4	+33 +4	+50 +4	+37 +17	+46 +17	+60 +31	+79 +50	+106 +77	+123 +77	180	200
										+109 +80	+126 +80	200	225
										+113 +84	+130 +84	225	250
+7 −16	±16	±26	+27 +4	+36 +4	+56 +4	+43 +20	+52 +20	+66 +34	+88 +56	+126 +94	+146 +94	250	280
										+130 +98	+150 +98	280	315
+7 −18	±18	+29 −28	+29 +4	+40 +4	+61 +4	+46 +21	+57 +21	+73 +37	+98 +62	+144 +108	+165 +108	315	355
										+150 +114	+171 +114	355	400
+7 −20	±20	+31 −32	+32 +5	+45 +5	+68 +5	+50 +23	+63 +23	+80 +40	+108 +68	+166 +126	+189 +126	400	450
										+172 +132	+195 +132	450	500
—	—	—	—	+44 0	+70 0	—	+70 +26	+88 +44	+122 +78	+194 +150	+220 +150	500	560
										+199 +155	+225 +155	560	630
—	—	—	—	+50 0	+80 0	—	+80 +30	+100 +50	+138 +88	+225 +175	+255 +175	630	710
										+235 +185	+265 +185	710	800
—	—	—	—	+56 0	+90 0	—	+90 +34	+112 +56	+156 +100	+266 +210	+300 +210	800	900
										+276 +220	+310 +220	900	1000
—	—	—	—	+66 0	+105 0	—	+106 +40	+132 +66	+186 +120	+316 +250	+355 +250	1000	1120
										+326 +260	+365 +260	1120	1250
—	—	—	—	+78 0	+125 0	—	+126 +48	+156 +78	+218 +140	+378 +300	+425 +300	1250	1400
										+408 +330	+455 +330	1400	1600
—	—	—	—	+92 0	+150 0	—	+150 +58	+184 +92	+262 +170	+462 +370	+520 +370	1600	1800
										+492 +400	+550 +400	1800	2000

www.bergab.ru Берг АБ bergab@ya.ru Тел. (495)-228-06-21, факс (495) 223-3071

www.bergab.ru Берг АБ bergab@ya.ru Тел. (495)-228-06-21, факс (495) 223-3071

6. Deviations of holes used in common fits

Unit: μm

Classification of diameter (mm) Over	or less	E6	F6	F7	G6	G7	H6	H7	H8	J6	J7	JS6	JS7
10	18	+43 +32	+27 +16	+34 +16	+17 +6	+24 +6	+11 0	+18 0	+27 0	+6 −5	+10 −8	±5.5	±9
18	30	+53 +40	+33 +20	+41 +20	+20 +7	+28 +7	+13 0	+21 0	+33 0	+8 −5	+12 −9	±6.5	±10.5
30	50	+66 +50	+41 +25	+50 +25	+25 +9	+34 +9	+16 0	+25 0	+39 0	+10 −6	+14 −11	±8	±12.5
50	80	+79 +60	+49 +30	+60 +30	+29 +10	+40 +10	+19 0	+30 0	+46 0	+13 −6	+18 −12	±9.5	±15
80	120	+94 +72	+58 +36	+71 +36	+34 +12	+47 +12	+22 0	+35 0	+54 0	+16 −6	+22 −13	±11	±17.5
120	180	+110 +85	+68 +43	+83 +43	+39 +14	+54 +14	+25 0	+40 0	+63 0	+18 −7	+26 −14	±12.5	±20
180	250	+129 +100	+79 +50	+96 +50	+44 +15	+61 +15	+29 0	+46 0	+72 0	+22 −7	+30 −16	±14.5	±23
250	315	+142 +110	+88 +56	+108 +56	+49 +17	+69 +17	+32 0	+52 0	+81 0	+25 −7	+36 −16	±16	±26
315	400	+161 +125	+98 +62	+119 +62	+54 +18	+75 +18	+36 0	+57 0	+89 0	+29 −7	+39 −18	±18	±28.5
400	500	+175 +135	+108 +68	+131 +68	+60 +20	+83 +20	+40 0	+63 0	+97 0	+33 −7	+43 −20	±20	±31.5
500	630	+189 +145	+120 +76	+146 +76	+66 +22	+92 +22	+44 0	+70 0	+110 0	—	—	±22	±35
630	800	+210 +160	+130 +80	+160 +80	+74 +24	+104 +24	+50 0	+80 0	+125 0	—	—	±25	±40
800	1000	+226 +170	+142 +86	+176 +86	+82 +26	+116 +26	+56 0	+90 0	+140 0	—	—	±28	±45
1000	1250	+261 +195	+164 +98	+203 +98	+94 +28	+133 +28	+66 0	+105 0	+165 0	—	—	±33	±52.5
1250	1600	+298 +220	+188 +110	+235 +110	+108 +30	+155 +30	+78 0	+125 0	+195 0	—	—	±39	±62.5
1600	2000	+332 +240	+212 +120	+270 +120	+124 +32	+182 +32	+92 0	+150 0	+230 0	—	—	±46	±75
2000	2500	+370 +260	+240 +130	+305 +130	+144 +34	+209 +34	+110 0	+175 0	+280 0	—	—	±55	±87.5

K5	K6	K7	M5	M6	M7	N5	N6	N7	P6	P7	Classification of diameter (mm) Over	or less
+2 −6	+2 −9	+6 −12	−4 −12	−4 −15	0 −18	−9 −17	−9 −20	−5 −23	−15 −26	−11 −29	10	18
+1 −8	+2 −11	+6 −15	−5 −14	−4 −17	0 −21	−12 −21	−11 −24	−7 −28	−18 −31	−14 −35	18	30
+2 −9	+3 −13	+7 −18	−5 −16	−4 −20	0 −25	−13 −24	−12 −28	−8 −33	−21 −37	−17 −42	30	50
+3 −10	+4 −15	+9 −21	−6 −19	−5 −24	0 −30	−15 −28	−14 −33	−9 −39	−26 −45	−21 −51	50	80
+2 −13	+4 −18	+10 −25	−8 −23	−6 −28	0 −35	−18 −33	−16 −38	−10 −45	−30 −52	−24 −59	80	120
+3 −15	+4 −21	+12 −28	−9 −27	−8 −33	0 −40	−21 −39	−20 −45	−12 −52	−36 −61	−28 −68	120	180
+2 −18	+5 −24	+13 −33	−11 −31	−8 −37	0 −46	−25 −45	−22 −51	−14 −60	−41 −70	−33 −79	180	250
+3 −20	+5 −27	+16 −36	−13 −36	−9 −41	0 −52	−27 −50	−25 −57	−14 −66	−47 −79	−36 −88	250	315
+3 −22	+7 −29	+17 −40	−14 −39	−10 −46	0 −57	−30 −55	−26 −62	−16 −73	−51 −87	−41 −98	315	400
+2 −25	+8 −32	+18 −45	−16 −43	−10 −50	0 −63	−33 −60	−27 −67	−17 −80	−55 −95	−45 −108	400	500
—	0 −44	0 −70	—	−26 −70	−26 −96	—	−44 −88	−44 −114	−78 −122	−78 −148	500	630
—	0 −50	0 −80	—	−30 −80	−30 −110	—	−50 −100	−50 −130	−88 −138	−88 −168	630	800
—	0 −56	0 −90	—	−34 −90	−34 −124	—	−56 −112	−56 −146	−100 −156	−100 −190	800	1000
—	0 −66	0 −105	—	−40 −106	−40 −145	—	−66 −132	−66 −171	−120 −186	−120 −225	1000	1250
—	0 −78	0 −125	—	−48 −126	−48 −173	—	−78 −156	−78 −203	−140 −218	−140 −265	1250	1600
—	0 −92	0 −150	—	−58 −150	−58 −208	—	−92 −184	−92 −242	−170 −262	−170 −320	1600	2000
—	0 −110	0 −175	—	−68 −178	−68 −243	—	−110 −220	−110 −285	−195 −305	−195 −370	2000	2500

www.bergab.ru Берг АБ bergab@ya.ru Тел. (495)-228-06-21, факс (495) 223-3071

www.bergab.ru Берг АБ bergab@ya.ru Тел. (495)-228-06-21, факс (495) 223-3071

NSK Linear Guides

Specification number of preloaded assembly (example)

LH 30 1200 AN C 2- ** **P5 Z3-Ⅱ**

- Series (Refer to Table I-2.1)
- Size
- Rail length (mm)
- Ball slide shape/height (Refer to Table I-2.2)
- Material/surface treatment (Refer to Table I-4.1)
- Numbers of the ball slide per rail
- Design no
- Accuracy grade (Refer to Table I-3.2)
- Preload (Refer to Table I-3.2)
- : No code: One; Ⅱ: Two rails in a pair

● High vertical load carrying capacity type
・LH Series (self-aligning type)
LH-AN ····· (A-29,30)
LH-BN ····· (A-29,30)
LH-EL ····· (A-31,32)
LH-GL ····· (A-31,32)
LH-EM ····· (A-33,34)
LH-FL ····· (A-33,34)
LH-GM ····· (A-33,34)
LH-HL ····· (A-33,34)
LAH-AL ····· (A-35,36)
LAH-AN ····· (A-35,36)
LAH-BL ····· (A-35,36)
LAH-BN ····· (A-35,36)
LAH-EL ····· (A-37,38)
LAH-GL ····· (A-37,38)
LAH-FL ····· (A-39,40)
LAH-EM ····· (A-39,40)
LAH-HL ····· (A-39,40)
LAH-GM ····· (A-39,40)
L1H ····· (A-41)
・LS Series (self-aligning type)
LS-CL ····· (A-43,44)
LS-AL ····· (A-43,44)
LS-JL ····· (A-45,46)
LS-EL ····· (A-45,46)
LS-JM ····· (A-47,48)
LS-KL ····· (A-47,48)
LS-FL ····· (A-47,48)
LS-EM ····· (A-47,48)
LAS-CL ····· (A-49,50)
LAS-AL ····· (A-49,50)
LAS-EM ····· (A-51,52)
LAS-EL ····· (A-51,52)
LAS-KL ····· (A-53,54)
LAS-FL ····· (A-53,54)
L1S ····· (A-55)

●Four directional iso-load carrying capacity type
・LA Series (super-high rigidity type)
LA-AL ····· (A-57,58)
LA-BL ····· (A-57,58)
LA-AN ····· (A-59,60)
LA-BN ····· (A-59,60)
LA-EL ····· (A-61,62)
LA-GL ····· (A-61,62)
LA-FL ····· (A-63,64)
LA-HL ····· (A-63,64)
・LY Series (high rigidity type)
LY-AL ····· (A-67,68)
LY-BL ····· (A-67,68)
LY-AN ····· (A-69,70)
LY-BN ····· (A-69,70)
LY-EL ····· (A-71,72)
LY-GL ····· (A-71,72)
LY-TL ····· (A-71,72)
LY-FL ····· (A-73,74)
LY-HL ····· (A-73,74)

● High vertical load carrying capacity type
・LW Series (high moment type)
LW-EL ····· (A-77,78)
LAW-EL ····· (A-79,80)
L1W ····· (A-81)

● Miniature
・LE Series (high moment load carrying capacity type)
LE-AL ····· (A-83,84)
LE-TL ····· (A-83,84)
LE-AR ····· (A-83,84)
LE-TR ····· (A-83,84)
LE-BL ····· (A-85,86)
LE-UL ····· (A-85,86)
LE-CL ····· (A-87,88)
LE-SL ····· (A-87,88)
LAE-AR ····· (A-89,90)
LAE-TR ····· (A-89,90)
L1E ····· (A-91)
・LU Series
LU-AL ····· (A-93,94)
LU-TL ····· (A-93,94)
LU-AR ····· (A-93,94)
LU-TR ····· (A-93,94)
LU-BL ····· (A-95,96)
LU-UL ····· (A-95,96)
LAU-AR ····· (A-97,98)
LAU-TR ····· (A-97,98)
LAU-AL ····· (A-97,98)
L1U ····· (A-99)

● Light weight miniature
・LL Series (miniature light weight type)
LL ····· (A-101,102)

● S1 Series
・SH Series ····· (A-111～118)
・SS Series ····· (A-119～124)

● MF Series
・LH, LS Series ····· (A-130)
・LY, LA Series ····· (A-131)
・LE・LU Series ····· (A-132)
● LW Series ····· (A-133)
● LH Series ····· (A-139,140)
● HA Series
・HA-AN ····· (A-145,146)
・HA-AL ····· (A-145,146)
・HA-EM ····· (A-147,148)

Ball Screws

● Standard in stock····A Series, S Series

W 16 03 FA-7 PGX-C5 Z 32

- Product code (ball screw)
- Shaft diameter (mm)
- Effective threaded length (unit of 100 mm)
- A Series: MA, FA, SA, KA
- S Series: MS, FS, SS
- NSK design serial No.
- Ball screw specification/appearance
- Accuracy code
- Axial play code
- Lead (mm)

・A Series
W0400MA ~ 01MA (Lead1mm) ····· (B-41,42)
W0600MA ~ 01MA (Lead1mm) ····· (B-43,44)
W0800MA ~ 02MA (Lead1mm) ····· (B-45,46)
W0800MA ~ 02MA (Lead1.5mm) ····· (B-47,48)
W0800MA ~ 02MA (Lead2mm) ····· (B-49,50)
W1001MA ~ 02MA (Lead2mm) ····· (B-51,52)
W1001MA ~ 02MA (Lead2.5mm) ····· (B-53,54)
W1001FA ~ 03FA (Lead4mm) ····· (B-55,56)
W1201MA ~ 03MA (Lead2mm) ····· (B-57,58)
W1201MA ~ 03MA (Lead2.5mm) ····· (B-59,60)
W1201FA ~ 05FA (Lead5mm) ····· (B-61,62)
W1201FA ~ 05FA (Lead10mm) ····· (B-63,64)
W1401FA ~ 06FA (Lead5mm) ····· (B-65,66)
W1401FA ~ 07FA (Lead8mm) ····· (B-67,68)
W1501FA ~ 10FA (Lead10mm) ····· (B-69,70)
W1501FA ~ 10FA (Lead20mm) ····· (B-71,72)
W1601MA ~ 03MA (Lead2mm) ····· (B-73,74)
W1601MA ~ 03MA (Lead2.5mm) ····· (B-75,76)
W1601FA ~ 08FA (Lead5mm) ····· (B-77,78)
W1601FA ~ 10FA (Lead16mm) ····· (B-79,80)
W1603FA ~ 12FA (Lead32mm) ····· (B-81,82)
W2002SA ~ 06SA (Lead4mm) ····· (B-83,84)
W2002SA ~ 07SA (Lead5mm) ····· (B-85,86)
W2002FA ~ 12FA (Lead10mm) ····· (B-87,88)
W2003FA ~ 15FA (Lead20mm) ····· (B-89,90)
W2005FA ~ 17FA (Lead40mm) ····· (B-91,92)
W2502SA ~ 07SA (Lead4mm) ····· (B-93,94)
W2502SA ~ 11SA (Lead5mm) ····· (B-95,96)
W2503SA ~ 11SA (Lead6mm) ····· (B-97,98)
W2503SA ~ 14SA (Lead10mm) ····· (B-99,100)
W2507FA ~ 21FA (Lead20mm) ····· (B-101,102)
W2507FA ~ 21FA (Lead25mm) ····· (B-103,104)
W2508FA ~ 21FA (Lead50mm) ····· (B-105,106)
W2802SA ~ 11SA (Lead5mm) ····· (B-107,108,109,110)
W2803SA ~ 11SA (Lead6mm) ····· (B-111,112,113,114)
W3202SA ~ 14SA (Lead5mm) ····· (B-115,116,117,118)
W3203SA ~ 14SA (Lead6mm) ····· (B-119,120,121,122)
W3203SA ~ 14SA (Lead8mm) ····· (B-123,124)
W3203SA ~ 17SA (Lead10mm) ····· (B-125,126,127,128)
W3211FA ~ 27FA (Lead25mm) ····· (B-129,130)
W3211FA ~ 27FA (Lead32mm) ····· (B-131,132)
W3604SA ~ 17SA (Lead10mm) ····· (B-133,134,135,136)
W4003SA ~ 15SA (Lead5mm) ····· (B-137,138)
W4003SA ~ 15SA (Lead8mm) ····· (B-139,140)
W4004SA ~ 23SA (Lead10mm) ····· (B-141,142,143,144)
W4006SA ~ 24SA (Lead12mm) ····· (B-145,146,147,148)
W4506SA ~ 24SA (Lead10mm) ····· (B-149,150)
W5005SA ~ 25SA (Lead10mm) ····· (B-151,152,153,154)

・A Series (Stainless steel)
W0601KA (Lead1mm) ····· (B-157,158)
W0802KA (Lead1mm) ····· (B-159,160)
W0802KA (Lead2mm) ····· (B-161,162)
W1002KA (Lead2mm) ····· (B-163,164)
W1001KA ~ 03KA (Lead4mm) ····· (B-165,166)
W1201KA ~ 03KA (Lead2mm) ····· (B-167,168)
W1202KA ~ 05KA (Lead5mm) ····· (B-169,170)
W1203KA ~ 05KA (Lead10mm) ····· (B-171,172)
W1504KA ~ 10KA (Lead10mm) ····· (B-173,174)
W1504KA ~ 10KA (Lead20mm) ····· (B-175,176)
W1601KA ~ 03KA (Lead2mm) ····· (B-177,178)
W2005KA ~ 11KA (Lead20mm) ····· (B-179,180)

・S Series
W0400MS (Lead1mm) ····· (B183,184)
W0601MS (Lead1mm) ····· (B183,184)
W0801MS ~ 02MS (Lead1mm) ····· (B183,184)
W0801MS ~ 02MS (Lead1.5mm) ····· (B185,186)
W0801MS ~ 02MS (Lead2mm) ····· (B185,186)
W1001MS ~ 02MS (Lead2mm) ····· (B185,186)
W1001MS ~ 02MS (Lead2.5mm) ····· (B187,188)
W1202MS ~ 03MS (Lead2mm) ····· (B187,188)
W1202MS ~ 03MS (Lead2.5mm) ····· (B187,188)
W1001FS ~ 03FS (Lead4mm) ····· (B189,190)
W1201FS ~ 04FS (Lead5mm) ····· (B189,190)
W1202FS ~ 04FS (Lead10mm) ····· (B189,190)
W1403FS ~ 06FS (Lead5mm) ····· (B191,192)

www.bergab.ru Берг АБ bergab@ya.ru Тел. (495)-228-06-21, факс (495) 223-3071

www.bergab.ru Берг АБ bergab@ya.ru Тел. (495)-228-06-21, факс (495) 223-3071

W1405FS ~ 08FS (Lead8mm) ····· (B191,192)
W1504FS ~ 11FS (Lead10mm) ····· (B191,192)
W1602MS ~ 04MS (Lead2mm) ····· (B193,194)
W1602MS ~ 04MS (Lead2.5mm) ····· (B193,194)
W1504FS ~ 11FS (Lead20mm) ····· (B195,196)
W1609FS ~ 13FS (Lead32mm) ····· (B195,196)
W2011FS ~ 17FS (Lead40mm) ····· (B195,196)
W1605FS ~ 09FS (Lead5mm) ····· (B197,198)
W1606FS ~ 11FS (Lead16mm) ····· (B197,198)
W2009FS ~ 13FS (Lead10mm) ····· (B197,198)
W2010FS ~ 15FS (Lead20mm) ····· (B197,198)
W2003SS ~ 08SS (Lead4mm) ····· (B199,200)
W2003SS ~ 10SS (Lead5mm) ····· (B199,200)
W2503SS ~ 10SS (Lead4mm) ····· (B201,202)
W2503SS ~ 12SS (Lead5mm) ····· (B201,202)
W2504SS ~ 12SS (Lead6mm) ····· (B201,202)
W2502SS ~ 12SS (Lead5mm) ····· (B203,204)
W2504SS ~ 15SS (Lead10mm) ····· (B203,204)
W2513FS ~ 21SS (Lead20mm) ····· (B205,206)
W2513FS ~ 21FS (Lead25mm) ····· (B205,206)
W2515FS ~ 21FS (Lead50mm) ····· (B205,206)
W2504SS ~ 15SS (Lead10mm) ····· (B207,208)
W2804SS ~ 12SS (Lead5mm) ····· (B207,208)
W2806SS ~ 12SS (Lead6mm) ····· (B207,208)
W2804SS ~ 12SS (Lead5mm) ····· (B209,210)
W2804SS ~ 12SS (Lead6mm) ····· (B209,210)
W3204SS ~ 15SS (Lead5mm) ····· (B211,212)
W3206SS ~ 15SS (Lead6mm) ····· (B211,212)
W3204SS ~ 15SS (Lead5mm) ····· (B213,214)
W3206SS ~ 15SS (Lead6mm) ····· (B213,214)
W3206SS ~ 15SS (Lead8mm) ····· (B213,214)
W3204SS ~ 16SS (Lead5mm) ····· (B215,216)
W3205SS ~ 18SS (Lead10mm) ····· (B215,216)
W3205SS ~ 18SS (Lead10mm) ····· (B217,218)
W3607SS ~ 20SS (Lead10mm) ····· (B217,218)
W4006SS ~ 16SS (Lead5mm) ····· (B217,218)
W3205SS ~ 18SS (Lead10mm) ····· (B219,220)
W3607SS ~ 20SS (Lead10mm) ····· (B219,220)
W3217FS ~ 27FS (Lead25mm) ····· (B221,222)
W3217FS ~ 27FS (Lead32mm) ····· (B221,222)
W4007SS ~ 18SS (Lead8mm) ····· (B223,224)
W4007SS ~ 24SS (Lead10mm) ····· (B223,224)
W4010SS ~ 25SS (Lead12mm) ····· (B223,224)
W4007SS ~ 18SS (Lead10mm) ····· (B225,226)
W4007SS ~ 24SS (Lead12mm) ····· (B225,226)
W4007SS ~ 24SS (Lead10mm) ····· (B227,228)
W5007SS ~ 26SS (Lead10mm) ····· (B227,228)
W4510SS ~ 25SS (Lead10mm) ····· (B229,230)
W5010SS ~ 26SS (Lead10mm) ····· (B229,230)
W5010SS ~ 26SS (Lead10mm) ····· (B229,230)

Ball Screws

● Standard in stock ·····V Series

VFA 15 10 C7 S-500

- V Series: VFA, RMA, RMS
- Shaft diameter (mm)
- Lead (mm)
- Accuracy code
- Axial play code
- Screw shaft length (mm)

・V Series (low price)
VFA1210 (Screw shaft length 410 ~ 610mm) ····· (B233,234)
VFA1510 (Screw shaft length 500 ~ 1000mm) ···· (B235,236)
VFA1520 (Screw shaft length 500 ~ 1000mm) ···· (B237,238)

・V Series (precision rolled miniature ball screw, finished shaft end)
RMA0601 (Screw shaft length 160 ~ 260mm) ···· (B241,242)
RMA0801 (Screw shaft length 180 ~ 280mm) ···· (B243,244)
RMA0801.5 (Screw shaft length 180 ~ 280mm) ·· (B245,246)
RMA0802 (Screw shaft length180 ~ 280mm) ····· (B247,248)
RMA1002 (Screw shaft length250 ~ 350mm) ····· (B249,250)
RMA1202 (Screw shaft length250 ~ 350mm) ····· (B251,252)

・V Series (precision rolled miniature ball screw, blank shaft end)
RMS0601 ····· (B253,254)
RMS0801 ~ 02····· (B253,254)
RMS1002 ····· (B253,254)
RMS1202 ····· (B253,254)

● Standard in stock ·····R Series

RN FTL 25 10 A 5 S

- Product code (nut assembly)
- Nut model: FTL, FBL, STL, CT, FCL
- Shaft diameter (mm)
- Lead (mm)
- Internal specifications
- Effective numbers of turns of balls (numbers of turns x numbers of circuit)
- Seal code S: With seal / No code: Without seal

・R Series (Rolled ball screws)
RNFTL ····· (B257,262)
RNFBL ····· (B263,264)
RNCT ····· (B265,266)
RNSTL ····· (B267,268)
RNFCL ····· (B269,272)

● Accessories for standard models in stock
・Support units
WBK (light load for small equipment) ····· (B276 ~ 290)
WBK (heavy load for machine tool) ···· (B-277 ~ 294)
・Lock nuts
WBK (A Type) ····· (B-299)
WBK (S Type) ····· (B-299)
・Grease Units ····· (B-300)
・Travel Stopper
Items to be ordered····· (B-300)
・Angular contact ball bearing to support ball screw
**TAC ····· (B-301 ~ 306)

● Custom made ball screws (example of specification number)

DFT 50 10-5 L C3 Z-850/1230

- Nut model
- Screw shaft diameter
- Lead (mm)
- Effective numbers of turns of balls (numbers of turns x numbers of circuit)
- Direction of turn of thread: No code: Right L: Left
- Accuracy code
- Axial play code
- Effective length of thread (mm)
- Screw shaft overall length (mm)

・T Type (Return tube recirculation system)
SFT ·····(B-311 ~ 322)
PFT·····(B-323 ~ 328)
ZFT·····(B-329 ~ 334)
DFT ·····(B-335 ~ 344)
DFFT·····(B-345 ~ 350)
GSCT·····(B-351 ~ 352)
・D Type (Deflector recirculation system)
SFD·····(B-355 ~ 358)
ZFD ·····(B-359 ~ 362)

www.bergab.ru Берг АБ bergab@ya.ru Тел. (495)-228-06-21, факс (495) 223-3071

 www.bergab.ru Берг АБ bergab@ya.ru Тел. (495)-228-06-21, факс (495) 223-3071

DFD ····· (B-363 ~ 366)
DFFD ····· (B-367 ~ 370)
DCD ····· (B-371 ~ 374)

・M Type (Precision miniature, fine lead)
MSFD、MPFD ····· (B-377 ~ 380)
MJFD ····· (B-381 ~ 382)

・L Type (Precision, medium and high helix lead)
LPFT ····· (B-389 ~ 392)
LSFT ····· (B-385 ~ 388)
LDFT ····· (B-393 ~ 394)
LFFT ····· (B-395 ~ 396)
LSFC、LPFC ····· (B-397 ~ 398)

・U Type (Precision, high helix and super- high helix lead)
USFC,UPFC ····· (B-401 ~ 404)

・HMC Series (Ball screw for high speed machine tools)
HZC、HZF ····· (B-407 ~ 408)
HDC、HDF ····· (B-409 ~ 410)

・HTF Series (Ball screw for high load drive)
HTF ····· (B-413 ~ 414)

● Application oriented ball screws

・MF Series
PFT ····· (B-425 ~ 428)
LPFT ····· (B-429 ~ 430)
ZFT ····· (B-431 ~ 432)
DFT ····· (B-433 ~ 434)
ZFD ····· (B-435 ~ 436)
UPFC・LPFC ····· (B-437 ~ 438)
HZF ····· (B-439 ~ 440)
WFA ····· (B-441 ~ 454)

・S1 Series
PFT ····· (B-459 ~ 464)
LPFT ····· (B-465 ~ 468)

・NDT, NDD Series (Rotatable ball screw)
NDT, NDD ····· (B-475 ~ 476)

・Z Series (Robotte)
Σ ····· (B-481 ~ 488)

・Hollow shaft ball screw
H** ····· (B-491 ~ 492)

・Hollow shaft ball screw (seal unit)
WSK ····· (B-493 ~ 494)

Monocarriers

●Standard stock…MF series MCM type and MCH type

MC M 06 040 H 10 K

- MC: Monocarrier
- M: Type M: Light weight type (conventional type) / H: High rigid type / L: Low rail type
- 06: Nominal size (rail width)
- 040: Stroke (10mm unit)
- H: Accuracy grade : High grade (H)
- 10: Ball screw lead (mm)
- K: K : Single slider / D : Double slider

・MCM type
MCM02 (width 28mm ; lead 1,2mm)
Single slider - - - - - - - - - - - - - - - - (C24)
MCM03 (width 34mm ; lead 1,2,10,12mm)
Single slider - - - - - - - - - - - - - - - - (C25)
MCM05 (width 50mm ; lead 5,10,20mm)
Single slider - - - - - - - - - - - - - - - - (C27)
MCM05 (width 50mm ; lead 5,10,20mm)
Double slider - - - - - - - - - - - - - - - - (C28)
MCM06 (width 60mm ; lead 5,10,20mm)
Single slider - - - - - - - - - - - - - - - - (C29)
MCM06 (width 60mm ; lead 5,10,20mm)
Double slider - - - - - - - - - - - - - - - - (C30)
MCM08 (width 80mm ; lead 5,10,20mm)
Single slider - - - - - - - - - - - - - - - - (C31)
MCM08 (width 80mm ; lead 5,10,20mm)
Double slider - - - - - - - - - - - - - - - - (C32)
MCM10 (width 100mm ; lead 10,20mm)
Single slider - - - - - - - - - - - - - - - - (C33)
MCM10 (width 100mm ; lead 10,20mm)
Double slider - - - - - - - - - - - - - - - - (C34)
Optional Components of MCM
Sensor Unit - - - - - - - - - - - - - - - - (C35)
Sensor rail - - - - - - - - - - - - - - - - (C36)
Cover - (C39)
Motor Bracket - - - - - - - - - - - - - - - (C41)

・MCH type
MCH06 (width 60mm ; lead 5,10,20mm)
Single slider - - - - - - - - - - - - - - - - (C61)
MCH06 (width 60mm ; lead 5,10,20mm)
Double slider - - - - - - - - - - - - - - - - (C62)
MCL06 (width 60mm ; lead 5,10,20mm)
Single slider - - - - - - - - - - - - - - - - (C60)
MCH09 (width 86mm ; lead 5,10,20mm)
Single slider - - - - - - - - - - - - - - - - (C63)
MCH09 (width 86mm ; lead 5,10,20mm)
Double slider - - - - - - - - - - - - - - - - (C64)
MCH10 (width 100mm ; lead 5,10,20mm)
Single slider - - - - - - - - - - - - - - - - (C65)
MCH10 (width 100mm ; lead 5,10,20mm)
Double slider - - - - - - - - - - - - - - - - (C66)
Optional Components of MCH
Sensor Unit - - - - - - - - - - - - - - - - (C67)
Cover - (C69)
Motor Bracket - - - - - - - - - - - - - - - (C71)

www.bergab.ru Берг АБ bergab@ya.ru Тел. (495)-228-06-21, факс (495) 223-3071

 www.bergab.ru Берг АБ bergab@ya.ru Тел. (495)-228-06-21, факс (495) 223-3071

Standard Ball Screws in Stock
Index by screw diameter

A Series, A Series (KA), S Series, V Series, R Series

Screw diameter	Lead	Reference number	Page number
φ4	1mm	W0400MA	B41・42
		W0401MA	B41・42
		W0400MS	B183・184
φ6	1mm	W0600MA	B43・44
		W0601MA	B43・44
		W0601KA	B157・158
		W0601MS	B183・184
		RMA0601	B241・242
		RMS0601	B253・254
φ8	1mm	W0800MA	B45・46
		W0801MA	B45・46
		W0802MA	B45・46
		W0802KA	B159・160
		W0801MS	B183・184
		W0802MS	B183・184
		RMA0801	B243・244
		RMS0801	B253・254
	1.5mm	W0800MA	B47・48
		W0801MA	B47・48
		W0802MA	B47・48
		W0801MS	B185・186
		W0802MS	B185・186
		RMA0801.5	B245・246
		RMS0801.5	B253・254
	2mm	W0800MA	B49・50
		W0801MA	B49・50
		W0802MA	B49・50
		W0802KA	B161・162
		W0801MS	B185・186
		W0802MS	B185・186
		RMA0802	B247・248
		RMS0802	B253・254
φ10	2mm	W1001MA	B51・52
		W1002MA	B51・52
		W1002KA	B163・164
		W1001MS	B185・186

A Series, A Series (KA), S Series, V Series, R Series

Screw diameter	Lead	Reference number	Page number
φ10	2mm	W1002MS	B185・186
		RMA1002	B249・250
		RMS1002	B253・254
	2.5mm	W1001MA	B53・54
		W1002MA	B53・54
		W1001MS	B187・188
		W1002MS	B187・188
	3mm	RNFTL 1003A	B257・258
		RNCT 1003A	B265・266
	4mm	W1001FA	B55・56
		W1002FA	B55・56
		W1003FA	B55・56
		W1001KA	B165・166
		W1003KA	B165・166
		W1001FS	B189・190
		W1002FS	B189・190
		W1003FS	B189・190
	6mm	RNFTL 1006A	B257・258
		RNFBL 1006A	B263・264
φ12	2mm	W1201MA	B57・58
		W1202MA	B57・58
		W1203MA	B57・58
		W1201KA	B167・168
		W1203KA	B167・168
		W1202MS	B187・188
		W1203MS	B187・188
		RMA1202	B251・252
		RMS1202	B253・254
	2.5mm	W1201MA	B59・60
		W1202MA	B59・60
		W1203MA	B59・60
		W1202MS	B187・188
		W1203MS	B187・188
	5mm	W1201FA	B61・62
		W1202FA	B61・62
		W1203FA	B61・62
		W1204FA	B61・62
		W1205FA	B61・62
		W1202KA	B169・170

www.bergab.ru Берг АБ bergab@ya.ru Тел. (495)-228-06-21, факс (495) 223-3071

www.bergab.ru Берг АБ bergab@ya.ru Тел. (495)-228-06-21, факс (495) 223-3071

A Series, A Series (KA), S Series, V Series, R Series

Screw diameter	Lead	Reference number	Page number
φ12	5mm	W1205KA	B169 · 170
		W1201FS	B189 · 190
		W1202FS	B189 · 190
		W1204FS	B189 · 190
	8mm	RNFTL 1208A	B257 · 258
		RNFBL 1208A	B263 · 264
	10mm	W1201FA	B63 · 64
		W1202FA	B63 · 64
		W1203FA	B63 · 64
		W1204FA	B63 · 64
		W1205FA	B63 · 64
		W1203KA	B171 · 172
		W1205KA	B171 · 172
		W1202FS	B189 · 190
		W1204FS	B189 · 190
		VFA1210	B233 · 234
	12mm	RNFTL 1212A	B261 · 262
		RNFCL 1212A	B269 · 270
φ14	4mm	RNFTL 1404A	B257 · 258
		RNFBL 1404A	B263 · 264
		RNCT 1404A	B265 · 266
		RNSTL 1404A	B267 · 268
	5mm	W1401FA	B65 · 66
		W1402FA	B65 · 66
		W1403FA	B65 · 66
		W1404FA	B65 · 66
		W1405FA	B65 · 66
		W1406FA	B65 · 66
		W1403FS	B191 · 192
		W1406FS	B191 · 192
		RNFTL 1405A	B257 · 258
		RNFBL 1405A	B263 · 264
		RNCT 1405A	B265 · 266
		RNSTL 1405A	B267 · 268
	8mm	W1401FA	B67 · 68
		W1402FA	B67 · 68
		W1403FA	B67 · 68
		W1404FA	B67 · 68
		W1405FA	B67 · 68

A Series, A Series (KA), S Series, V Series, R Series

Screw diameter	Lead	Reference number	Page number
φ14	8mm	W1406FA	B67 · 68
		W1407FA	B67 · 68
		W1405FS	B191 · 192
		W1408FS	B191 · 192
φ15	10mm	W1501FA	B69 · 70
		W1502FA	B69 · 70
		W1503FA	B69 · 70
		W1504FA	B69 · 70
		W1505FA	B69 · 70
		W1506FA	B69 · 70
		W1507FA	B69 · 70
		W1508FA	B69 · 70
		W1510FA	B69 · 70
		W1504KA	B173 · 174
		W1506KA	B173 · 174
		W1510KA	B173 · 174
		W1504FS	B191 · 192
		W1506FS	B191 · 192
		W1509FS	B191 · 192
		W1511FS	B191 · 192
		VFA1510	B235 · 236
	20mm	W1501FA	B71 · 72
		W1502FA	B71 · 72
		W1503FA	B71 · 72
		W1504FA	B71 · 72
		W1505FA	B71 · 72
		W1506FA	B71 · 72
		W1507FA	B71 · 72
		W1508FA	B71 · 72
		W1510FA	B71 · 72
		W1504KA	B175 · 176
		W1506KA	B175 · 176
		W1510KA	B175 · 176
		W1504FS	B195 · 196
		W1506FS	B195 · 196
		W1509FS	B195 · 196
		W1511FS	B195 · 196
		VFA1520	B237 · 238
		RNFCL 1520A	B269 · 270

www.bergab.ru Берг АБ bergab@ya.ru Тел. (495)-228-06-21, факс (495) 223-3071

www.bergab.ru Берг АБ bergab@ya.ru Тел. (495)-228-06-21, факс (495) 223-3071

A Series, A Series (KA), S Series, V Series, R Series

Screw diameter	Lead	Reference number	Page number
φ16	2mm	W1601MA	B73・74
		W1602MA	B73・74
		W1603MA	B73・74
		W1601KA	B177・178
		W1603KA	B177・178
		W1602MS	B193・194
		W1604MS	B193・194
	2.5mm	W1601MA	B75・76
		W1602MA	B75・76
		W1603MA	B75・76
		W1602MS	B193・194
		W1604MS	B193・194
	5mm	W1601FA	B77・78
		W1602FA	B77・78
		W1603FA	B77・78
		W1604FA	B77・78
		W1606FA	B77・78
		W1608FA	B77・78
		W1605FS	B197・198
		W1609FS	B197・198
	10mm	RNFTL 1610A	B257・258
	16mm	W1601FA	B79・80
		W1602FA	B79・80
		W1603FA	B79・80
		W1604FA	B79・80
		W1605FA	B79・80
		W1606FA	B79・80
		W1607FA	B79・80
		W1608FA	B79・80
		W1610FA	B79・80
		W1606FS	B197・198
		W1611FS	B197・198
		RNFTL 1616A	B261・262
		RNFCL 1616A	B269・270
	32mm	W1603FA	B81・82
		W1605FA	B81・82
		W1608FA	B81・82
		W1612FA	B81・82
		W1609FS	B195・196

A Series, A Series (KA), S Series, V Series, R Series

Screw diameter	Lead	Reference number	Page number
φ16	32mm	W1613FS	B195・196
		RNFCL 1632A	B271・272
φ18	8mm	RNFTL 1808A	B257・258
		RNFBL 1808A	B263・264
		RNCT 1808A	B265・266
		RNSTL 1808A	B267・268
φ20	4mm	W2002SA	B83・84
		W2003SA	B83・84
		W2004SA	B83・84
		W2005SA	B83・84
		W2006SA	B83・84
		W2003SS	B199・200
		W2005SS	B199・200
		W2008SS	B199・200
	5mm	W2002SA	B85・86
		W2003SA	B85・86
		W2004SA	B85・86
		W2005SA	B85・86
		W2007SA	B85・86
		W2003SS	B199・200
		W2005SS	B199・200
		W2007SS	B199・200
		W2010SS	B199・200
		RNFTL 2005A	B257・258
		RNFBL 2005A	B263・264
		RNCT 2005A	B265・266
		RNSTL 2005A	B267・268
	10mm	W2002FA	B87・88
		W2003FA	B87・88
		W2004FA	B87・88
		W2005FA	B87・88
		W2006FA	B87・88
		W2007FA	B87・88
		W2008FA	B87・88
		W2009FA	B87・88
		W2010FA	B87・88
		W2011FA	B87・88
		W2012FA	B87・88
		W2009FS	B197・198

www.bergab.ru Берг АБ bergab@ya.ru Тел. (495)-228-06-21, факс (495) 223-3071

www.bergab.ru Берг АБ bergab@ya.ru Тел. (495)-228-06-21, факс (495) 223-3071

A Series, A Series (KA), S Series, V Series, R Series

Screw diameter	Lead	Reference number	Page number
φ20	10mm	W2013FS	B197・198
		RNFTL 2010A	B257・258
		RNFBL 2010A	B263・264
		RNSTL 2010A	B267・268
	20mm	W2003FA	B89・90
		W2004FA	B89・90
		W2005FA	B89・90
		W2006FA	B89・90
		W2007FA	B89・90
		W2008FA	B89・90
		W2009FA	B89・90
		W2010FA	B89・90
		W2011FA	B89・90
		W2012FA	B89・90
		W2015FA	B89・90
		W2005KA	B179・180
		W2007KA	B179・180
		W2011KA	B179・180
		W2010FS	B197・198
		W2015FS	B197・198
		RNFTL 2020A	B261・262
		RNFCL 2020A	B269・270
	40mm	W2005FA	B91・92
		W2007FA	B91・92
		W2009FA	B91・92
		W2011FA	B91・92
		W2013FA	B91・92
		W2017FA	B91・92
		W2011FS	B195・196
		W2017FS	B195・196
		RNFCL 2040A	B271・272
φ25	4mm	W2502SA	B93・94
		W2503SA	B93・94
		W2504SA	B93・94
		W2505SA	B93・94
		W2507SA	B93・94
		W2503SS	B201・202
		W2506SS	B201・202
		W2510SS	B201・202

A Series, A Series (KA), S Series, V Series, R Series

Screw diameter	Lead	Reference number	Page number
φ25	5mm	W2502SA	B95・96
		W2503SA	B95・96
		W2504SA	B95・96
		W2505SA	B95・96
		W2506SA	B95・96
		W2507SA	B95・96
		W2509SA	B95・96
		W2511SA	B95・96
		W2503SS	B201・202
		W2505SS	B201・202
		W2508SS	B201・202
		W2512SS	B201・202
		W2502SS	B203・204
		W2504SS	B203・204
		W2506SS	B203・204
		W2509SS	B203・204
		W2512SS	B203・204
		RNFTL 2505A	B257・258
		RNFBL 2505A	B263・264
		RNCT 2505A	B265・266
		RNSTL 2505A	B267・268
	6mm	W2503SA	B97・98
		W2505SA	B97・98
		W2507SA	B97・98
		W2511SA	B97・98
		W2504SS	B201・202
		W2508SS	B201・202
		W2512SS	B201・202
	10mm	W2503SA	B99・100
		W2505SA	B99・100
		W2507SA	B99・100
		W2509SA	B99・100
		W2511SA	B99・100
		W2514SA	B99・100
		W2504SS	B203・204・207・208
		W2506SS	B203・204
		W2507SS	B207・208
		W2508SS	B203・204
		W2510SS	B207・208

www.bergab.ru Берг АБ bergab@ya.ru Тел. (495)-228-06-21, факс (495) 223-3071

www.bergab.ru Берг АБ bergab@ya.ru Тел. (495)-228-06-21, факс (495) 223-3071

A Series, A Series (KA), S Series, V Series, R Series

Screw diameter	Lead	Reference number	Page number
φ25	10mm	W2511SS	B203・204
		W2515SS	B203・204・207・208
		RNFTL 2510A	B257・258
		RNFBL 2510A	B263・264
		RNCT 2510A	B265・266
		RNSTL 2510A	B267・268
	20mm	W2507FA	B101・102
		W2509FA	B101・102
		W2511FA	B101・102
		W2513FA	B101・102
		W2515FA	B101・102
		W2517FA	B101・102
		W2521FA	B101・102
		W2513FS	B205・206
		W2521FS	B205・206
	25mm	W2507FA	B103・104
		W2509FA	B103・104
		W2511FA	B103・104
		W2513FA	B103・104
		W2515FA	B103・104
		W2517FA	B103・104
		W2521FA	B103・104
		W2513FS	B205・206
		W2521FS	B205・206
		RNFTL 2525A	B261・262
		RNFCL 2525A	B269・270
	50mm	W2508FA	B105・106
		W2511FA	B105・106
		W2516FA	B105・106
		W2521FA	B105・106
		W2515FS	B205・206
		W2521FS	B205・206
		RNFCL 2550A	B271・272
φ28	5mm	W2802SA	B107・108・109・110
		W2803SA	B107・108・109・110
		W2804SA	B107・108・109・110
		W2805SA	B107・108・109・110
		W2807SA	B107・108・109・110
		W2809SA	B107・108・109・110

A Series, A Series (KA), S Series, V Series, R Series

Screw diameter	Lead	Reference number	Page number
φ28	5mm	W2811SA	B107・108・109・110
		W2804SS	B207・208・209・210
		W2806SS	B207・208・209・210
		W2808SS	B207・208・209・210
		W2812SS	B207・208・209・210
	6mm	W2803SA	B111・112・113・114
		W2805SA	B111・112・113・114
		W2807SA	B111・112・113・114
		W2809SA	B111・112・113・114
		W2811SA	B111・112・113・114
		W2804SS	B207・208・209・210
		W2806SS	B207・208・209・210
		W2808SS	B207・208・209・210
		W2812SS	B207・208・209・210
		RNFTL 2806A	B259・260
		RNFBL 2806A	B263・264
		RNCT 2806A	B265・266
		RNSTL 2806A	B267・268
φ32	5mm	W3202SA	B115・116・117・118
		W3203SA	B115・116・117・118
		W3204SA	B115・116・117・118
		W3205SA	B115・116・117・118
		W3206SA	B115・116・117・118
		W3207SA	B115・116・117・118
		W3209SA	B115・116・117・118
		W3211SA	B115・116・117・118
		W3214SA	B115・116・117・118
		W3204SS	B211・212・213・214 215・216
		W3206SS	B211・212・213・214 215・216
		W3208SS	B211・212 213・214
		W3209SS	B215・216
		W3212SS	B211・212・213・214 215・216
		W3215SS	B211・212・213・214
		W3216SS	B215・216
	6mm	W3203SA	B119・120・121・122
		W3205SA	B119・120・121・122

www.bergab.ru Берг АБ bergab@ya.ru Тел. (495)-228-06-21, факс (495) 223-3071

www.bergab.ru Берг АБ bergab@ya.ru Тел. (495)-228-06-21, факс (495) 223-3071

A Series, A Series (KA), S Series, V Series, R Series

Screw diameter	Lead	Reference number	Page number
φ32	6mm	W3207SA	B119・120・121・122
		W3209SA	B119・120・121・122
		W3211SA	B119・120・121・122
		W3214SA	B119・120・121・122
		W3206SS	B211・212・213・214
		W3210SS	B211・212・213・214
		W3215SS	B211・212・213・214
	8mm	W3203SA	B123・124
		W3205SA	B123・124
		W3207SA	B123・124
		W3209SA	B123・124
		W3214SA	B123・124
		W3206SS	B213・214
		W3210SS	B213・214
		W3215SS	B213・214
	10mm	W3203SA	B125・126・127・128
		W3204SA	B125・126・127・128
		W3205SA	B125・126・127・128
		W3206SA	B125・126・127・128
		W3207SA	B125・126・127・128
		W3209SA	B125・126・127・128
		W3211SA	B125・126・127・128
		W3214SA	B125・126・127・128
		W3217SA	B125・126・127・128
		W3205SS	B215・216・217・218 219・220
		W3207SS	B215・216・217・218 219・220
		W3210SS	B215・216・217・218 219・220
		W3214SS	B215・216・217・218 219・220
		W3218SS	B215・216・217・218 219・220
		RNFTL 3210A	B259・260
		RNFBL 3210A	B263・264
		RNCT 3210A	B265・266
		RNSTL 3210A	B267・268
	25mm	W3211FA	B129・130

A Series, A Series (KA), S Series, V Series, R Series

Screw diameter	Lead	Reference number	Page number
φ32	25mm	W3216FA	B129・130
		W3221FA	B129・130
		W3227FA	B129・130
		W3217FS	B221・222
		W3227FS	B221・222
	32mm	W3211FA	B131・132
		W3216FA	B131・132
		W3221FA	B131・132
		W3227FA	B131・132
		W3217FS	B221・222
		W3227FS	B221・222
		RNFTL 3232A	B261・262
		RNFCL 3232A	B269・270
	64mm	RNFCL 3264A	B271・272
φ36	10mm	W3604SA	B133・134 135・136
		W3606SA	B133・134 135・136
		W3609SA	B133・134 135・136
		W3613SA	B133・134 135・136
		W3617SA	B133・134 135・136
		W3607SS	B217・218 219・220
		W3612SS	B217・218 219・220
		W3620SS	B217・218・219・220
		RNFTL 3610A	B259・260
		RNFBL 3610A	B263・264
		RNCT 3610A	B265・266
		RNSTL 3610A	B267・268
φ40	5mm	W4003SA	B137・138
		W4005SA	B137・138
		W4007SA	B137・138
		W4009SA	B137・138
		W4011SA	B137・138
		W4015SA	B137・138
		W4006SS	B217・218
		W4010SS	B217・218
		W4016SS	B217・218
	8mm	W4003SA	B139・140
		W4005SA	B139・140
		W4007SA	B139・140
		W4009SA	B139・140

www.bergab.ru Берг АБ bergab@ya.ru Тел. (495)-228-06-21, факс (495) 223-3071

www.bergab.ru Берг АБ bergab@ya.ru Тел. (495)-228-06-21, факс (495) 223-3071

A Series, A Series (KA), S Series, V Series, R Series

Screw diameter	Lead	Reference number	Page number
φ40	8mm	W4011SA	B139・140
		W4015SA	B139・140
		W4007SS	B223・224
		W4012SS	B223・224
		W4018SS	B223・224
	10mm	W4004SA	B141・142 143・144
		W4005SA	B141・142 143・144
		W4006SA	B141・142 143・144
		W4007SA	B141・142 143・144
		W4009SA	B141・142 143・144
		W4011SA	B141・142 143・144
		W4013SA	B141・142 143・144
		W4015SA	B141・142 143・144
		W4017SA	B141・142 143・144
		W4023SA	B141・142 143・144
		W4007SS	B223・224 225・226 227・228
		W4010SS	B223・224 225・226 227・228
		W4014SS	B223・224 225・226 227・228
		W4018SS	B223・224 225・226 227・228
		W4024SS	B223・224 225・226 227・228
		RNFTL 4010A	B259・260
		RNFBL 4010A	B263・264
		RNCT 4010A	B265・266
	12mm	W4006SA	B145・146 147・148
		W4009SA	B145・146 147・148
		W4013SA	B145・146 147・148
		W4017SA	B145・146 147・148
		W4024SA	B145・146 147・148
		W4010SS	B223・224 225・226
		W4016SS	B223・224 225・226
		W4025SS	B223・224 225・226
	40mm	RNFTL 4040A	B261・262
		RNFCL 4040A	B269・270
	80mm	RNFCL 4080A	B271・272

A Series, A Series (KA), S Series, V Series, R Series

Screw diameter	Lead	Reference number	Page number
φ45	10mm	W4506SA	B149・150
		W4509SA	B149・150
		W4513SA	B149・150
		W4517SA	B149・150
		W4524SA	B149・150
		W4510SS	B229・230
		W4516SS	B229・230
		W4525SS	B229・230
	12mm	RNFTL 4512A	B259・260
		RNCT 4512A	B265・266
		RNSTL 4512A	B267・268
φ50	10mm	W5005SA	B151・152 153・154
		W5007SA	B151・152 153・154
		W5009SA	B151・152 153・154
		W5011SA	B151・152 153・154
		W5014SA	B151・152 153・154
		W5019SA	B151・152 153・154
		W5025SA	B151・152 153・154
		W5007SS	B227・228
		W5010SS	B227・228 229・230
		W5015SS	B227・228 229・230
		W5020SS	B227・228 229・230
		W5026SS	B227・228 229・230
		RNFTL 5010A	B259・260
		RNCT 5010A	B265・266
	16mm	RNFTL 5016A	B259・260
		RNCT 5016A	B265・266
	50mm	RNFCL 5050A	B269・270

www.bergab.ru Берг АБ bergab@ya.ru Тел. (495)-228-06-21, факс (495) 223-3071

Worldwide Sales Offices and Manufacturing Plants

www.bergab.ru Берг АБ bergab@ya.ru Тел. (495)-228-06-21, факс (495) 223-3071

NSK LTD.-HEADQUARTERS, TOKYO, JAPAN   www.nsk.com
Nissei Bldg., 1-6-3, OHSAKI SHINAGAWA-KU, TOKYO 141-8560, JAPAN
INDUSTRIAL MACHINERY BEARINGS DIVISION-HEADQUARTERS
P: 03-3779-7227   F: 03-3779-7644   C: 81
AFTERMARKET BUSINESS DIVISION-HEADQUARTERS
P: 03-3779-8893   F: 03-3779-7644   C: 81
AUTOMOTIVE BUSINESS DIVISION-HEADQUARTERS
P: 03-3779-7189   F: 03-3779-7917   C: 81
NEEDLE ROLLER BEARINGS STRATEGIC DIVISION-HEADQUARTERS
P: 03-3779-7288   F: 03-3779-7917   C: 81
PRECISION MACHINERY & PARTS DIVISION-HEADQUARTERS
P: 03-3779-7163   F: 03-3779-7644   C: 81

Africa

South Africa:

NSK SOUTH AFRICA (PTY) LTD.
JOHANNESBURG   25 Galaxy Avenue, Linbro Business Park, Sandton, Gauteng, P.O. Box 1157, Kelvin, 2054 South Africa
P: 011-458-3600   F: 011-458-3608   C: 27

Asia and Oceania

Australia:

NSK AUSTRALIA PTY. LTD.   www.au.nsk.com
MELBOURNE   11 Dalmore Drive, Scoresby, Victoria 3179, Australia
P: 03-9764-8302   F: 03-9764-8304   C: 61
SYDNEY   Unit 1, Riverside Centre, 24-28 River Road West, Parramatta, New South Wales, 2150, Australia
P: 02-9893-8322   F: 02-9893-8406   C: 61
BRISBANE   1/69 Selhurst Street, Coopers Plains, 4108, Australia
P: 07-3345-5027   F: 07-3345-5376   C: 61
PERTH   Unit 1, 71 Tacoma Circuit, Canning Vale, Perth, Western Australia 6155, Australia
P: 08-9256-5000   F: 08-9256-1044   C: 61

China:

NSK HONG KONG LTD.
HONG KONG   Room 814, World Commerce Centre, Harbour City, T.S.T, KLN, Hong Kong
P: 2739-9933   F: 2739-9323   C: 852

KUNSHAN NSK CO., LTD.
KUNSHAN PLANT   258 South Huang Pu Jiang Rd., Kunshan Economic & Technology Development Zone, Jiang Su, China (215335)
P: 0512-5771-5654   F: 0512-5771-5689   C: 86

CHANGSHU NSK NEEDLE BEARING CO., LTD.
JIANGSU PLANT   No. 66 Dongnan Road, Changshu Southeast Economic Development Zone,
Changshu City, Jiangsu, China (215500)
P: 0512-5230-1111   F: 0512-5230-6011   C: 86

GUIZHOU HS NSK BEARINGS CO., LTD.
ANSHUN PLANT   Dongjiao, Anshun, Guizhou, China (561000)
P: 0853-3522332   F: 0853-3522552   C: 86

NSK STEERING SYSTEMS DONGGUAN CO., LTD.
DONGGUAN PLANT   High-tech Park, Shilong Road, Guanlong Section, Dongguan, Guanlong, China (523119)
P: 0769-262-0960   F: 0769-262-0910   C: 86

ZHANGJIAGANG NSK PRECISION MACHINERY CO., LTD.
JIANGSU PLANT   No. 34 Zhenxing Road, Zhangjiagang Economic Development Zone, Zhangjiagang City, Jiangsu, China (215600)
P: 0512-5867-6496   F: 0512-5818-0970   C: 86

TIMKEN-NSK BEARINGS (SUZHOU) CO., LTD.
JIANGSU PLANT   22 Taishan Road, Suzhou New District, Jiangsu, China (215129)
P: 0512-6665-5666   F: 0512-6665-9108   C: 86

NSK CHINA TECHNOLOGY CENTER
JIANGSU   258 South Huang Pujing Road, Kunshan Economic & Technical Development Zone, Jiang Su, China (215335)
P: 0512-5771-5654   F: 0512-5771-0748   C: 86

NSK (SHANGHAI) TRADING CO., LTD.
SHANGHAI   10th Fl. Building No. A, Shanghai Far East International Plaza, Bldg.
A 319 Xian Xia Road, Shanghai, China (200051)
P: 021-6235-0198   F: 021-6235-1033   C: 86

NSK REPRESENTATIVE OFFICES
BEIJING   Room 2118, Beijing Fortune Bldg., 5 Dong san Huan Bei Lu, Chao Yang District, Beijing, China (100004)
P: 010-6590-8161   F: 010-6590-8166   C: 86
GUANGZHOU   Room 2009-11, Guangdong Telecom Plaza, 18 Zhongshan Er Road, Guangzhou, China (510080)
P: 020-3786-4833   F: 020-3786-4501   C: 86
ANSHUN   Dongjiao, Anshun, Guizhou, China (561000)
P: 0853-3522522   F: 0853-3522552   C: 86
CHENGDU   Room1901, Green Land Hotel, No.99 Zhonglieci Xi Street, Chengdu, China (610016)
P: 028-8661-4200   F: 028-8661-4343   C: 86
SHENZHEN   Room 8B08-09, Jueshi Tower, Jiabing Road, Luohu, Shenzhen, China (518001)
P: 0755-25904886   F: 0755-25904883   C: 86
CHANGCHUN   Room 1001, Building A, Zhongyin Building, 727 Xi'an Road, Changchun, Jilin Province, China (130061)
P: 0431-88988682   F: 0431-88988670   C: 86

NSK (CHINA) INVESTMENT CO., LTD   www.nsk.com.cn
SHANGHAI   10th Fl. Building No. A, Shanghai Far East International Plaza, 319 Xian Xia Road, Shanghai, China (200051)
P: 021-6235-0198   F: 021-6235-1033   C: 86

India:

RANE NSK STEERING SYSTEMS LTD.
CHENNAI   14, Rajagopalan Salai, Vallancherry, Guduvancherry, Pin-603 202, India
P:044-274-66002   F:044-274-66001   C:91

NSK LTD. INDIA BRANCH OFFICE
CHENNAI   Giriguja Enclave, 4th Floor, 56, First Avenue, Shastri Nagar, Chennai 600 020, India
P:044-2446-6862   F:044-2446-6861   C:91
GURGAON   311, JMD Pacific Square, Sector 15 (II), 32nd Milestone, National Highway-8, Gurgaon, Haryana - 122 001 India
P:0124-4104530   F:0124-5104532   C:91

Indonesia:

PT. NSK BEARINGS MANUFACTURING INDONESIA
JAKARTA PLANT   Blok M-4, Kawasan Berikat, MM2100, Industrial Town, Cikarang Barat, Bekasi 17520, Jawa Barat, Indonesia
P: 021-898-0155   F: 021-898-0156, 021-898-0183   C: 62

PT. NSK INDONESIA
JAKARTA   Summitmas II 6th Fl., Jl. Jend. Sudirman Kav. 61-62, Jakarta 12190 Indonesia
P: 021-252-3458   F: 021-252-3223   C: 62

Korea:

NSK KOREA CO., LTD.   www.kr.nsk.com
SEOUL   9F (West Wing) Posco Center 892, Deachi 4 Dong Kangnam-Ku, Seoul, Korea
P: 02-3287-0300   F: 02-3287-0345, 0445   C: 82
CHANGWON PLANT   60, Seongsan-Dong, Changwon, Kyungsangnam-Do, Korea
P: 055-287-6001   F: 055-285-9982   C: 82

Malaysia:

NSK BEARINGS (MALAYSIA) SDN. BHD.   www.my.nsk.com
KUALA LUMPUR   No. 2, Jalan Pemaju U1/15, Seksyen U1, Hicom Glenmarie Industrial Park,
40150 Shah Alam, Selangor Darul Ehsan, Malaysia
P: 03-7803-8859   F: 03-7806-5982, 03-7880-1570   C: 60
PENANG   10, Lengkok Kikik 1, Taman Inderawasih, 13600 Prai, Penang, Malaysia
P: 04-3902275   F: 04-3991830   C: 60
JOHOR BAHRU   88 Jalan Ros Merah 2/17, Taman Johor Jaya, 81100 Johor Bahru, Johor, Malaysia
P: 07-3546290   F: 07-3546291   C: 60
KOTA KINABALU   Lot 10, Lrg. Kurma 4, Likas Ind. Centre, 51/2 Miles, Jalan Tuaran, 88450 Inanam Sabah, Malaysia
P: 088-421260   F: 088-421261   C: 60
IPOH   Gr. Floor, 89 Jalan Bendahara, 31650 Ipoh, Perak, Malaysia
P: 05-2555000   F: 05-2553373   C: 60

NSK MICRO PRECISION (M) SDN. BHD.   www.my.nsk.com
MALAYSIA PLANT   No.43 Jalan Taming Dua,Taman Taming Jaya, 43300 Balakong, Selangor Darul Ehsan, Malaysia
P: 03-8961-6288   F: 03-8961-6488   C: 60

New Zealand:

NSK NEW ZEALAND LTD.   www.nsk-rhp.co.nz
AUCKLAND   3 Te Apunga Place Mt. Wellington, Auckland, New Zealand
P: 09-276-4992   F: 09-276-4082   C: 64

Philippines:

NSK REPRESENTATIVE OFFICE
MANILA   Unit 910 Philippine AXA Life Centre, 1286 Sen. Gil Puyat Avenue,
Makati City 1200, Metro Manila, Philippines
P: 02-759-6246   F: 02-759-6249   C: 63

Singapore:

NSK INTERNATIONAL (SINGAPORE) PTE LTD.
SINGAPORE   2 Toh Guan Road East #02-02 Singapore 608837
P: 6273-0357   F: 6275-8937   C: 65

NSK SINGAPORE (PTE) LTD.   www.nsk-singapore.com.sg
SINGAPORE   2 Toh Guan Road East #02-03 Singapore 608837
P: 6278-1711   F: 6273-0253   T: RS24058   C: 65

Taiwan:

TAIWAN NSK PRECISION CO., LTD.
TAIPEI   11F., 87, Song Jiang Rd. Taipei 104 Taiwan R.O.C
P: 02-2509-3305   F: 02-2509-1393   C: 886
TAICHUNG   107-6, SEC, 3, Wenxing Rd., Taichung, Taiwan R.O.C.
P: 04-2311-7978   F: 04-2311-2627   C: 886
TAINAN   No.48, Lane 62, Fusing Rd., Sinshin Township, Tainan County 744, Taiwan, R.O.C.
P: 06-589-2703   F: 06-589-2719   C: 886

TAIWAN NSK TECHNOLOGY CO., LTD.
TAIPEI   11F., 87, Song Jiang Rd. Taipei 104 Taiwan R.O.C.
P: 02-2509-3305   F: 02-2509-1393   C: 886

Thailand:

NSK BEARINGS (THAILAND) CO., LTD.
BANGKOK   25th Fl. RS Tower, 121/76-77 Rachadaphisek Road, Dindaeng, Bangkok 10400, Thailand
P: 02-6412-150   F: 02-6412-161   C: 66

NSK BEARINGS MANUFACTURING (THAILAND) CO., LTD.
CHONBURI   700/430 Moo 7, Amata Nakorn Industrial Estate T. Donhualor, A. Muangchonburi, Chonburi 20000 Thailand
P: 038-454010~454016   F: 038-454017, 454020   C: 66

SIAM NSK STEERING SYSTEMS CO., LTD.
CHACHOENGSAO   90 Moo 9, Wellgrow Industrial Estate, Km. 36 Bangna-Trad Road, Bangwao,
Bangpakong, Chachoengsao 24180, Thailand
P: 038-522-343~350   F: 038-522-351   C: 66

NSK ASIA PACIFIC TECHNOLOGY CENTRE (THAILAND) CO., LTD.
CHONBURI   700/430 Moo7, Amata Nakorn Industrial Estate, T.Donhualor, A..Muangchonburi, Chonburi, 20000, Thailand
P: 038-454631~454633   F: 038-454634   C: 66

Vietnam:

NSK VIETNAM CO., LTD.
HANOI   Techno Center, Room 204-205, Thang Long Industrial Park, Dong Anh District, Hanoi, Vietnam
P: 04-955-0159   F: 04-955-0158   C: 84

NSK REPRESENTATIVE OFFICE
HO CHI MINH CITY   The Metropolitan, Suite 307, 235 Dong Khoi Street, District 1,HCMC, Vietnam
P: 08-822-7907   F: 08-822-7910   C: 84

Europe

NSK EUROPE LTD. (EUROPEAN HEADQUARTERS)   www.eu.nsk.com
MAIDENHEAD, U.K.   Belmont Place, Belmont Road, Maidenhead, Berkshire SL6 6TB U.K.
P: 01628-509800   F: 01628-509808   C: 44

France:

NSK FRANCE S.A.S.
PARIS   Quartier de l'Europe, 2 Rue Georges Guynemer, 78283 Guyancourt Cedex, France
P: 01-30-57-39-39   F: 01-30-57-00-01   C: 33

Germany:

NSK DEUTSCHLAND GMBH
DÜSSELDORF   Harkortstrasse 15, 40880 Ratingen, Germany
P: 02102-481-0   F: 02102-481-2290   C: 49
STUTTGART   Sielminger Str. 65, 70771 Leinfelden-Echterdingen, Germany
P: 0711-79082-0   F: 0711-79082-289   C: 49
LEIPZIG   04129 Leipzig, Germany
P: 0341-5204937   F: 0341-5204938   C: 49
WOLFSBURG   Heinrich-Nordhoff-Str. 101,38440 Wolfsburg, Germany
P: 05361-27647-10   F: 05361-27647-70   C: 49

NSK PRECISION EUROPE GMBH
DÜSSELDORF   Harkortstrasse 15, 40880 Ratingen, Germany
P: 02102-481-0   F: 02102-481-2290   C: 49

NSK STEERING SYSTEMS EUROPE LTD.
STUTTGART   Sielminger Strasse 65 D-70771 Leinfelden-Echterdingen, Germany
P: 0771-79082-277   F: 0771-79082-289   C: 49

NEUWEG FERTIGUNG GMBH
CORPORATE OFFICE/PLANT   Ehinger Strasse 5, D-89597 Munderkingen, Germany
P: 07393-540   F: 07393-5414   C: 49

Italy:

NSK ITALIA S.p.A.
MILANO   Via Garibaldi, 215, I-20024 Garbagnate Milanese (MI), Italy
P: 02-99-519-1   F: 02-990-25-778, 02-990-28-373   C: 39

INDUSTRIA CUSCINETTI S.p.A.
TORINO PLANT   Via Giotto 4, 10080, S. Benigno C. se, Torino, Italy
P: 0119824811   F: 0119880284   C: 39

Netherlands:

NSK EUROPEAN DISTRIBUTION CENTRE B.V.
De Kroonstraat 38, 5048 AP Tilburg, Nederland
P: 013-4647647   F: 013-4647648   C: 31

Poland:

NSK EUROPE LTD. WARSAW LIAISON OFFICE
WARSAW LIAISON OFFICE   Przedstawicielstowo w Warszawie, ul. Migdalowa 4 lok. 73, 02-796 Warsaw, Poland
P: 022-645-1525, 1526   F: 022-645-1529   C: 48

NSK BEARINGS POLSKA S.A.
CORPORATE OFFICE/PLANT   UL. Jagiellonska 109, 25-734 Kielce, Poland
P: 041-367-0505   F: 041-367-0500   C: 48

NSK EUROPEAN TECHNOLOGY CENTER, POLAND OFFICE
UL. Jagiellonska 109, 25-734 Kielce, Poland
P: 041-366-5812   F: 041-366-5206   C: 48

NSK Steering Systems Europe (Polska) Sp.zo.o
CORPORATE OFFICE/PLANT   UL. M.Jachimowicza 17, 58-306 Walbrzych Poland
P: 074-664-4101   F: 074-664-4104   C: 48

Spain:

NSK SPAIN S.A.
BARCELONA   C/Tarragona, 161 Cuerpo Bajo. 2ª planta, 08014 Barcelona. Spain
P: 093-289-27-63   F: 093-433-5776   C: 34

Turkey:

NSK BEARINGS MIDDLE EAST TRADING CO., LTD.
ISTANBUL   19 Mayis Mah. Ataturk Cad., Ulya Engin Is Merkezi No. 68 Kat. 6, Kozyatagi,
34734 Istanbul, Turkey
P: 0216-355-0398   F: 0216-355-0399   C: 90

United Kingdom:

NSK BEARINGS EUROPE LTD.
PETERLEE PLANT   3 Brindley Road, South West Industrial Estate, Peterlee, Co. Durham, SR8 2JD U.K.
P: 0191-586-6111   F: 0191-586-3482   C: 44
PETERLEE (FORGE) PLANT   Davey Drive, North West Industrial Estate, Peterlee, Co. Durham, SR8 2PW U.K.
P: 0191-518-0777   F: 0191-518-0303   C: 44
NEWARK PLANT   Northern Road, Newark, Nottinghamshire, NG24 2JF U.K.
P: 01636-605123   F: 01636-643072   C: 44

NSK EUROPEAN TECHNOLOGY CENTRE
NEWARK, U.K.   Northern Road, Newark, Nottinghamshire, NG24 2JF U.K.
P: 01636-605123   F: 01636-643241   C: 44

NSK UK LTD.
NEWARK   Northern Road, Newark, Nottinghamshire, NG24 2JF U.K.
P: 01636-605123   F: 01636-643050   C: 44

NSK PRECISION UK LTD.
NEWARK   Northern Road, Newark, Nottinghamshire, NG24 2JF, U.K.
P: 01636-605123   F: 01636-613559   C: 44

NSK STEERING SYSTEMS EUROPE LTD.
CORPORATE OFFICE   Gallagher Business Park, Silverstone Drive, Rowley's Green, Coventry, Warwickshire, CV6 6PA, U.K.
P: 024-76-588588   F: 024-76-588599   C: 44
PETERLEE PLANT   6/7 Doxford Drive, South West Industrial Estate, Peterlee, Co. Durham, SR8 2RL U.K.
P: 0191-518-6400   F: 0191-518-6421   C: 44

North and South America

NSK AMERICAS, INC. (AMERICAN HEADQUARTERS)
ANN ARBOR   4200 Goss Road, Ann Arbor, Michigan 48105-2779, U.S.A.
P: 734-913-7500   F: 734-913-7511   C: 1

Argentina:

NSK ARGENTINA SRL
BUENOS AIRES   Garcia del Rio 2477 Piso 7 Oficina "A" (1429) Buenos Aires-Argentina
P: 11-4704-5100   F: 11-4704-0033   C: 54

Brazil:

NSK BRASIL LTDA.   www.br.nsk.com
SÃO PAULO   Rua 13 de Maio 1633-14° Andar-Bela Vista-CEP 01327-905 Sao Paulo, SP, Brazil
P: 011-3269-4700   F: 011-3269-4720   C: 55
SUZANO PLANT   Av. Vereador Joao Batista Fitipaldi, 66, CEP 08685-000, Vila Maluf, Suzano, SP, Brazil
P: 011-4741-4090   F: 011-4748-2355   C: 55
BELO HORIZONTE   Rua Ceara 1431-4° andar-sala 405-Funcionarios Belo Horizonte-MG, Brazil 30150-311
P: 031-3274-2477   F: 031-3273-4408   C: 55
JOINVILLE   Rua Blumenau, 178-sala 910-Centro Joinville-SC, Brazil 89204-250
P: 047-3422-5445/3433-3627   F: 047-3422-2817   C: 55
PORTO ALEGRE   Av. Cristovão Colombo, 1694-sala 202-Floresta Porto Alegre-RS, Brazil 90560 001
P: 051-3222-1324/3346-7851   F: 051-3222-2599   C: 55
RECIFE   Av. Conselheiro Aguiar, 2738-6° andar-conj. 604-Boa Viagem Recife-PE, Brazil 51020-020
P: 081-3326-3781   F: 081-3326-5047   C: 55

Canada:

NSK CANADA INC.   www.ca.nsk.com
HEAD OFFICE   5585 McAdam Road, Mississauga, Ontario, Canada L4Z 1N4
P: 905-890-0740   F: 905-890-0488   C: 1
MONTREAL   2150-32E Avenue, Lachine, Quebec, Canada H8T 3H7
P: 514-633-1220   F: 514-633-8164   C: 1
TORONTO   5585 McAdam Road, Mississauga, Ontario, Canada L4Z 1N4
P: 905-890-0561   F: 905-890-1938   C: 1
VANCOUVER   3353 Wayburne Drive, Burnaby, British Columbia, Canada V5G 4L4
P: 604-294-1151   F: 604-294-1407   C: 1

Mexico:

NSK RODAMIENTOS MEXICANA, S.A. DE C.V.   www.mx.nsk.com
MEXICO CITY   Av. Presidente Juarez No. 2007 Lote 5 Col.San Jeronimo Tepetlacalco,
Tlalnepantla, Estado de Mexico, C.P. 54090, Mexico
P: 55-5390-4312   F: 55-5390-8175   C: 52

United States of America:

NSK CORPORATION   www.us.nsk.com

[CORPORATE OFFICE]
ANN ARBOR   4200 Goss Road, Ann Arbor, Michigan 48108-9754, U.S.A.
P: 734-913-7500   F: 734-913-7511   C: 1

[NSK AMERICAN TECHNOLOGY CENTER]
ANN ARBOR   4200 Goss Road, Ann Arbor, Michigan 48105-2799, U.S.A.
P: 734-913-7500   F: 734-913-7852   C: 1

[BRANCHES and DISTRIBUTION CENTERS]
SANTA FE SPRINGS   12839 Florence Avenue, Santa Fe Springs, California 90670-4501, U.S.A.
P: 562-968-1000   F: 562-968-1023   C: 1
PLAINFIELD   1581 South Perry Road, Plainfield, Indiana 46168-7602, U.S.A.
P: 317-837-8879   F: 317-837-7207   C: 1
FRANKLIN   3400 Bearing Drive, Franklin, Indiana 46131-9660, U.S.A.
P: 317-738-5000   F: 317-738-4310   C: 1

[PLANTS]
ANN ARBOR   5400 South State Road, Ann Arbor, Michigan 48108-9794, U.S.A.
P: 734-996-4400   F: 734-996-4707   C: 1
CLARINDA   1100 North First Street, Clarinda, Iowa 51632-1981, U.S.A.
P: 712-542-5121   F: 712-542-4905   C: 1
FRANKLIN   3400 Bearing Drive, Franklin, Indiana 46131-9660, U.S.A.
P: 317-738-5000   F: 317-738-4310   C: 1
LIBERTY   1112 East Kitchel Road, Liberty, Indiana 47353-8985, U.S.A.
P: 765-458-5000   F: 765-458-7832   C: 1

NSK PRECISION AMERICA, INC.   www.npa.nsk.com
FRANKLIN   3450 Bearing Drive, Franklin, Indiana 46131-9660, U.S.A.
P: 317-738-5000   F: 317-738-5050   C: 1
SAN JOSE   780 Montague Expressway, Suite 508, San Jose, California 95131, U.S.A.
P: 408-944-9400   F: 408-944-9405   C: 1

[DISTRIBUTION CENTER]
FRANKLIN   3450 Bearing Drive, Franklin, Indiana 46131-9660, U.S.A.
P: 317-738-5000   F: 317-738-5006   C: 1

NSK STEERING SYSTEMS AMERICA, INC.   www.nssa.nsk.com
CORPORATE OFFICE/PLANT   110 Shields Drive, Bennington, Vermont 05201-8309, U.S.A.
P: 802-442-5448   F: 802-442-2253   C: 1
ANN ARBOR   4200 Goss Road, Ann Arbor, Michigan 48105-2799, U.S.A.
P: 734-913-7500   F: 734-913-7102   C: 1

NSK-WARNER U.S.A., INC.
CORPORATE OFFICE/PLANT   3001 West Big Beaver Road, Suite 412 Troy, Michigan 48084-3101, U.S.A.
P: 248-822-8888   F: 248-822-1111   C: 1

NSK LATIN AMERICA, INC.   www.la.nsk.com
MIAMI   2500 NW 107th Avenue, Suite 300, Miami, Florida, 33172-5924, U.S.A.
P: 305-477-0605   F: 305-477-0377   C: 1

P: Phone   F: Fax   T: Telex   C: Country Code   Printed in Japan

NSK Ltd. has a basic policy not to export any products or technology designated as controlled items by export-related laws. When exporting the products in this brochure, the laws of the exporting country must be observed. Specifications are subject to change without notice and without any obligation on the part of the manufacturer. Every care has been taken to ensure the accuracy of the data contained in this brochure, but no liability can be accepted for any loss or damage suffered through errors or omissions. We will gratefully acknowledge any additions or corrections.

www.bergab.ru Берг АБ bergab@ya.ru Тел. (495)-228-06-21, факс (495) 223-3071

rgab.ru Берг АБ bergab@ya.ru Тел. (495)-228-06-21, факс (495) 2

MOTION & CONTROL™

NSK

Eco-awareness and reliability in motion

PRINTED WITH SOY INK

rgab.ru Берг АБ bergab@ya.ru Тел. (495)-228-06-21, факс (495) 2

AT. No. E3161d 2007-E-5 Printed in Japan ©NSK Ltd. 2008