www.bergab.ru Берг АБ bergab@ya.ru Тел. (495)-228-06-21, факс (495) 223-3071

MOTION & CONTROL

NSK

# Hub Unit Bearings

Comfort for the 21st Century
Intelligently and reliably meeting the needs of a wide range of vehicle models.

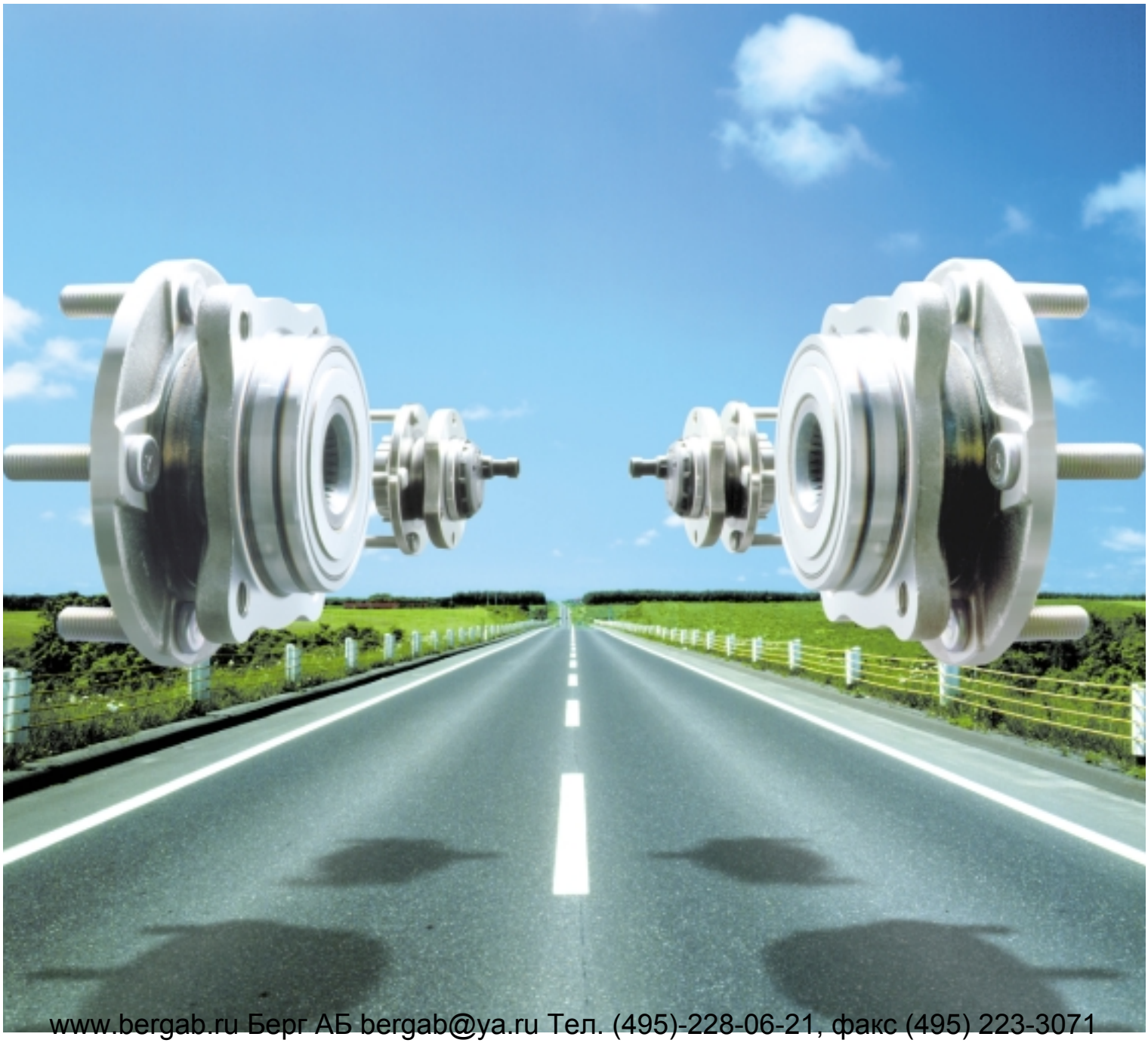

www.bergab.ru Берг АБ bergab@ya.ru Тел. (495)-228-06-21, факс (495) 223-3071

www.bergab.ru Берг АБ bergab@ya.ru Тел. (495)-228-06-21, факс (495) 223-3071

# Hub Unit Bearings

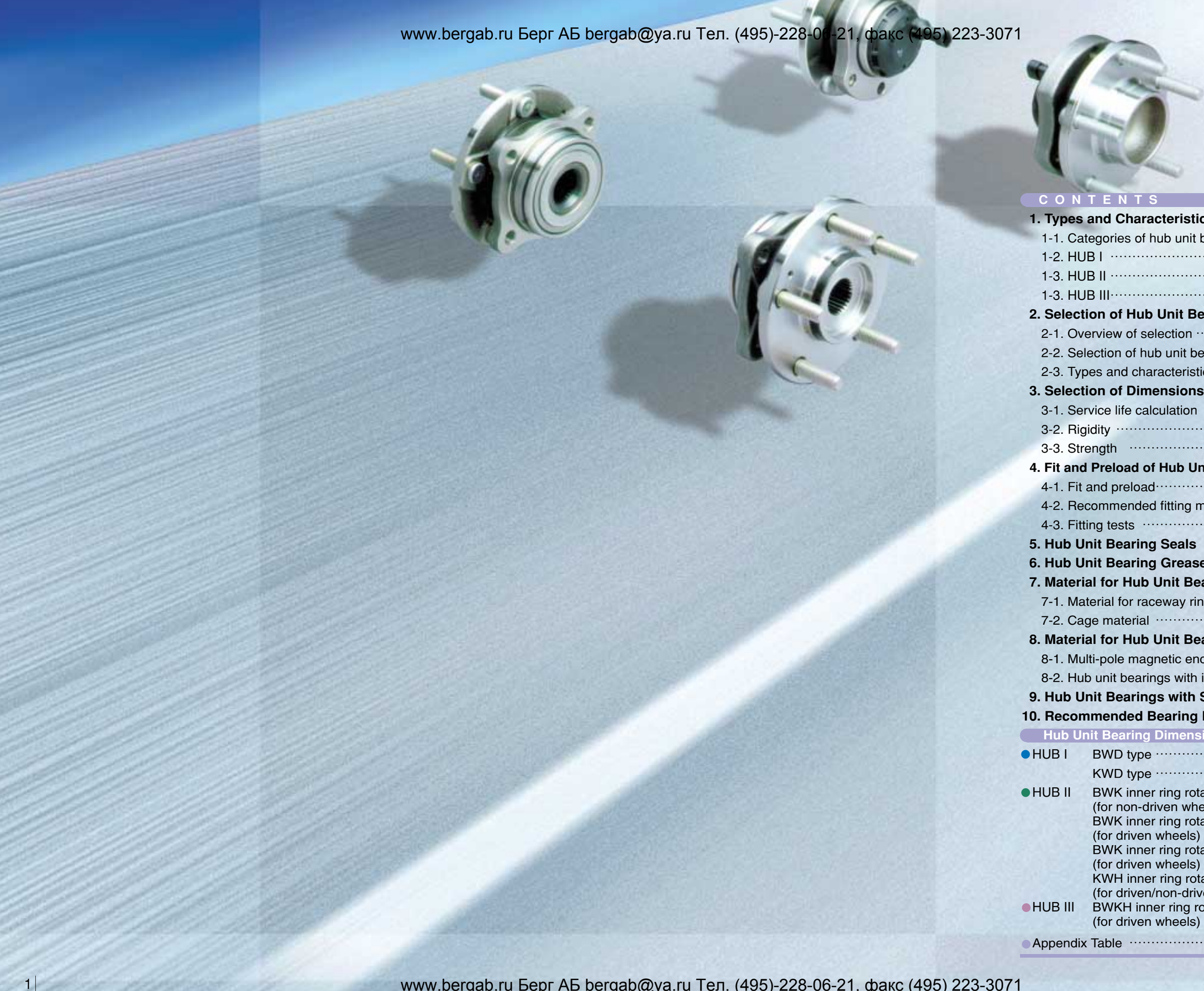

CONTENTS


**1. Types and Characteristics of Hub Unit Bearings**
1-1. Categories of hub unit bearings ····3
1-2. HUB I ····5
1-3. HUB II ····7
1-3. HUB III ····9
**2. Selection of Hub Unit Bearings**
2-1. Overview of selection ····11
2-2. Selection of hub unit bearings ····14
2-3. Types and characteristics of bearings ····15
**3. Selection of Dimensions of Hub Unit Bearings**
3-1. Service life calculation ····16
3-2. Rigidity ····18
3-3. Strength ····19
**4. Fit and Preload of Hub Unit Bearings**
4-1. Fit and preload ····21
4-2. Recommended fitting measurements ····21
4-3. Fitting tests ····21
**5. Hub Unit Bearing Seals** ····22
**6. Hub Unit Bearing Grease** ····24
**7. Material for Hub Unit Bearings**
7-1. Material for raceway rings and rolling elements ····25
7-2. Cage material ····25
**8. Material for Hub Unit Bearings**
8-1. Multi-pole magnetic encoders for ABS ····26
8-2. Hub unit bearings with integral ABS sensors ····27
**9. Hub Unit Bearings with Swaging** ····28
**10. Recommended Bearing Reference** ····28

**Hub Unit Bearing Dimension Table**
HUB I — BWD type ····31
KWD type ····33
HUB II — BWK inner ring rotation type (for non-driven wheels) ····35
BWK inner ring rotation type (for driven wheels) ····36
BWK inner ring rotation type (for driven wheels) ····37
KWH inner ring rotation type (for driven/non-driven wheels) ····37
HUB III — BWKH inner ring rotation type (for driven wheels) ····40
Appendix Table ····41



www.bergab.ru Берг АБ bergab@ya.ru Тел. (495)-228-06-21, факс (495) 223-3071

www.bergab.ru Берг АБ bergab@ya.ru Тел. (495)-228-06-21, факс (495) 223-3071



# 1. Types and Features of Hub Unit Bearings

## 1-1. Categories of hub unit bearings

Hub unit bearings for automobile wheels are comprised of bearing rings, rolling elements, and cages, similar to general-purpose rolling bearings. The first-generation hub unit (Hub I), second-generation hub unit (Hub II), and third-generation hub unit (Hub III) vary according to the integration of the bearings and their peripheral components. In addition, the forms are categorized by usage condition (rotations of outer rings or inner rings) and component location (for driven wheels or non-driven wheels).

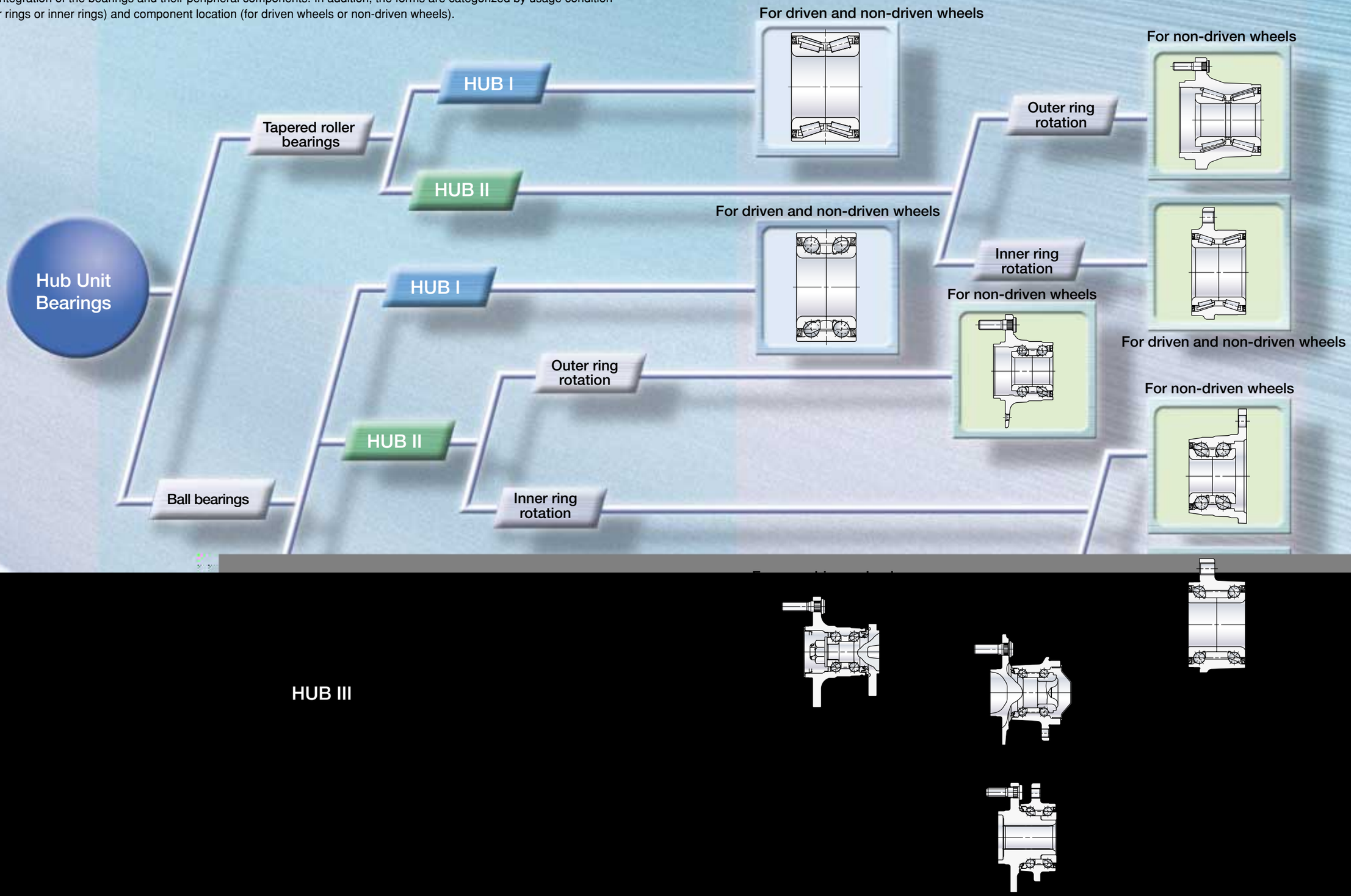

www.bergab.ru Берг АБ bergab@ya.ru Тел. (495)-228-06-21, факс (495) 223-3071

## 1-2. HUB I

For HUB I, NSK uses proprietary bearing-type designations such as “BWD” for ball bearings and “KWD” for tapered roller bearings. The HUB I units are double-row angular contact ball bearings (BWD) and double-row tapered roller bearings (KWD) with back-to-back duplex outer rings.
No preload adjustments (including dimensional adjustments by shims) are required on the assembly line. The initial axial clearance is properly pre-set for the preload to fall within the specified range after mounting. In addition, the integral seal eliminates the need for automotive makers to externally apply seals.

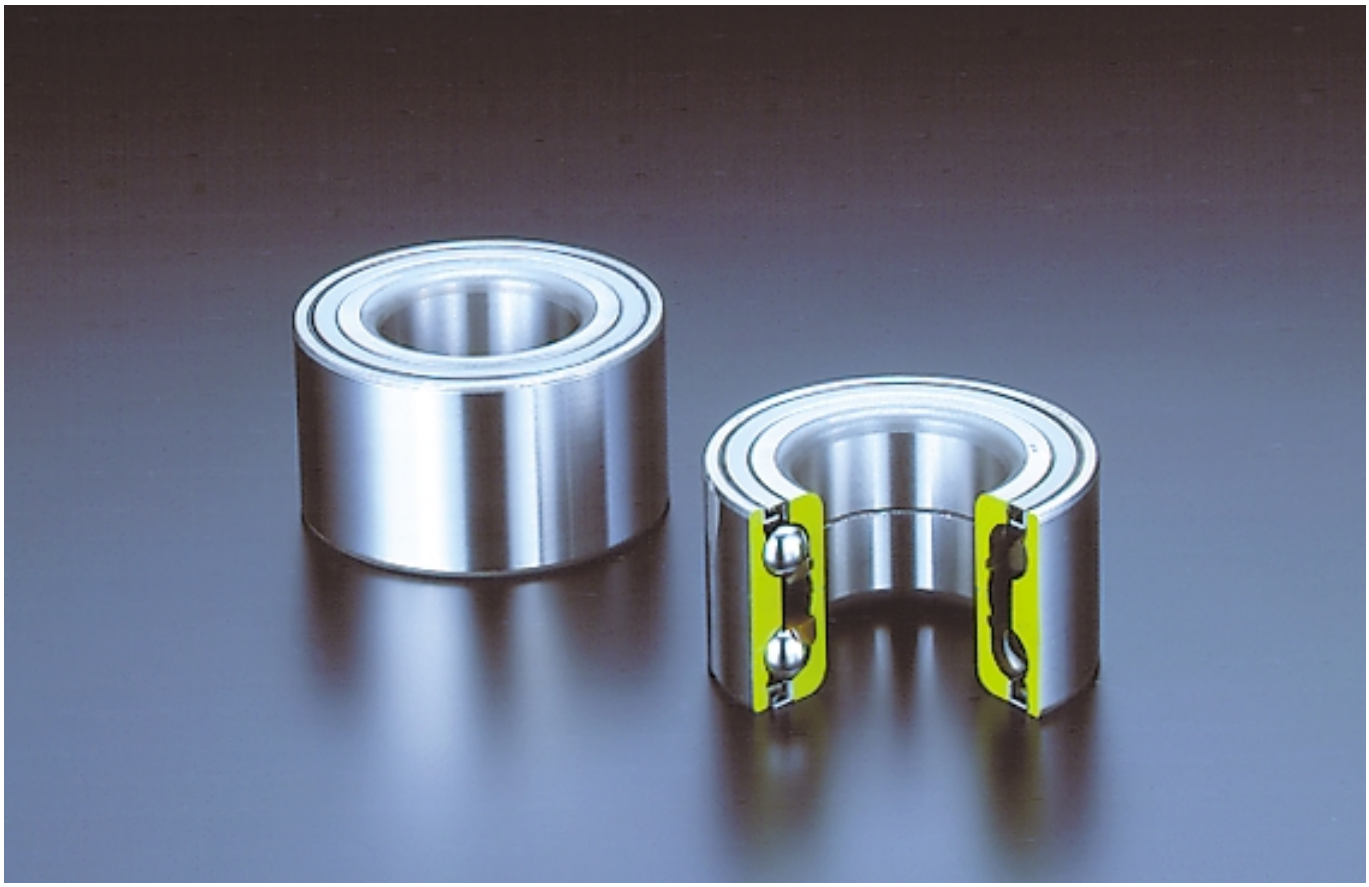

BWD (Ball bearings) for driven and non-driven wheels

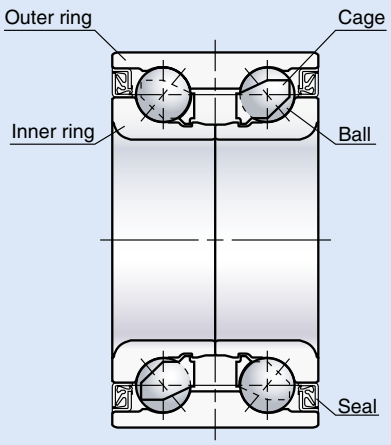



www.bergab.ru Берг АБ bergab@ya.ru Тел. (495)-228-06-21, факс (495) 223-3071

www.bergab.ru Берг АБ bergab@ya.ru Тел. (495)-228-06-21, факс (495) 223-3071


NSK uses bearing reference for hub unit bearings clarifying boundary dimensions, types, and specification codes. Below are examples of bearing reference:

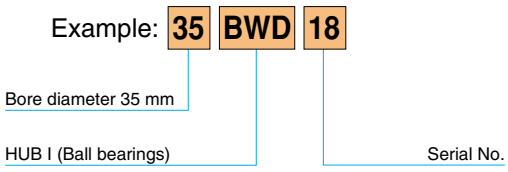


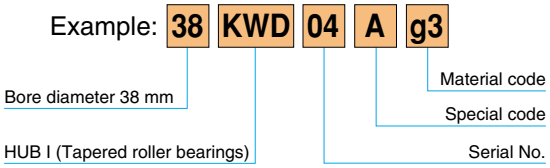


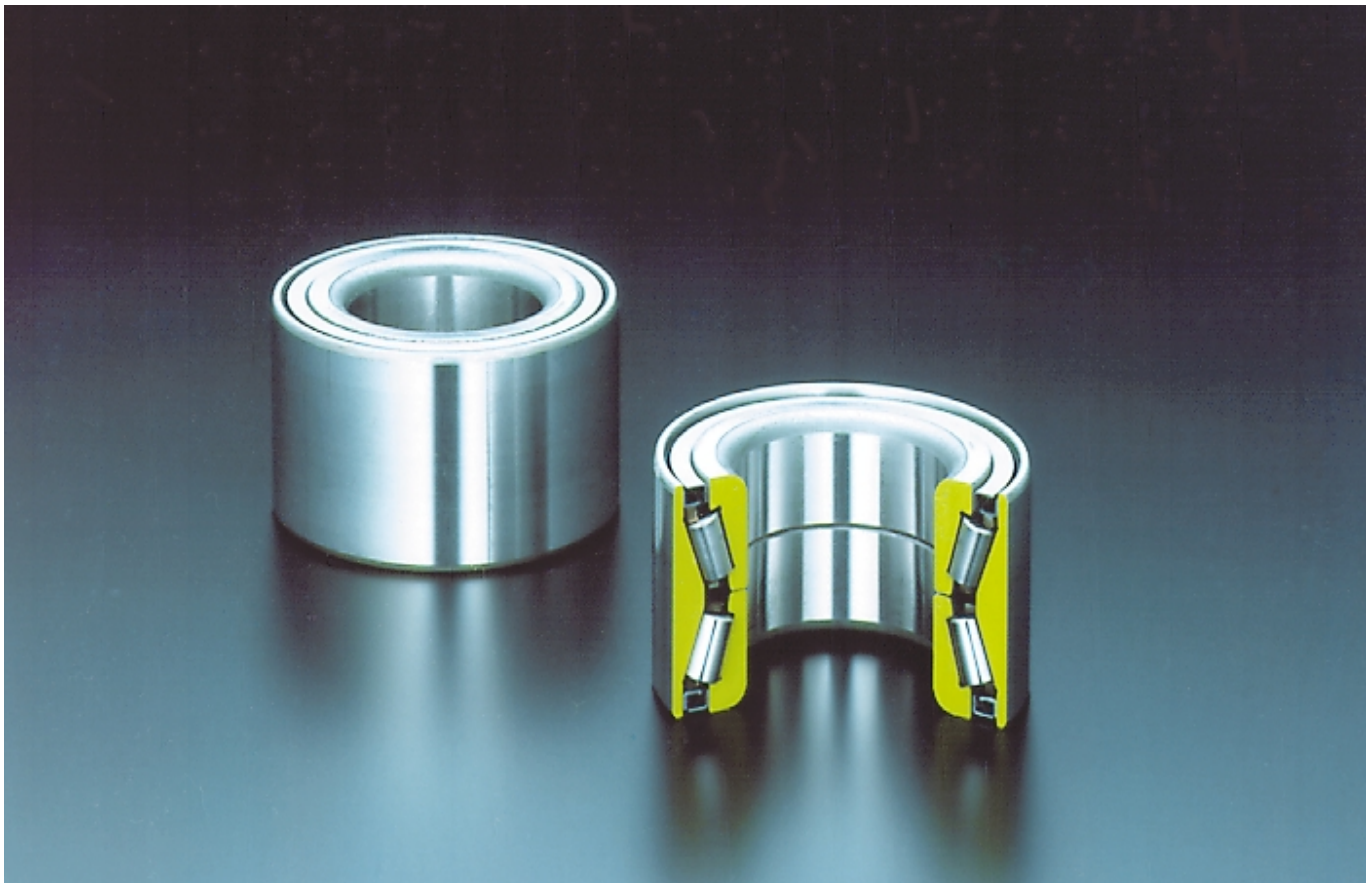

KWD (Tapered roller bearings) for driven and non-driven wheels

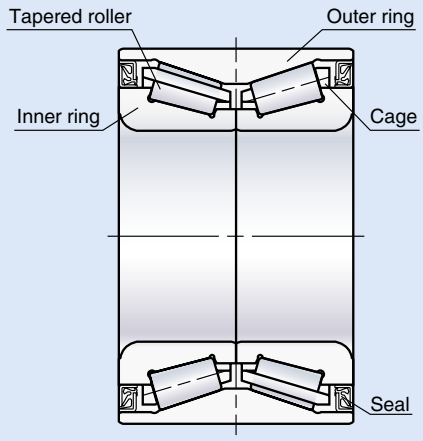


www.bergab.ru Берг АБ bergab@ya.ru Тел. (495)-228-06-21, факс (495) 223-3071

www.bergab.ru Берг АБ bergab@ya.ru Тел. (495)-228-06-21, факс (495) 223-3071

## 1-3. HUB II

For HUB II, NSK uses proprietary bearing-type designations such as “BWK” for ball bearings and “KWH” for tapered roller bearings. HUB II configurations are BWD or KWD HUB I with flanged outer rings.

● **Outer ring rotation type (for non-driven wheels):** Wheels and brake disks are mounted at the flanges. Spindles are inserted into the inner rings and fixed with nuts.

● **Inner ring rotation type (for non-driven wheels):** The flanges are fixed to the car body. Hub spindles are pressed into the inner rings and fixed with nuts.

● **Inner ring rotation type (for driven wheels):** The flanges are fixed to the axle housing. Wheel hubs and drive shafts are engaged to the inner rings.

With all of the HUB II types, the initial axial clearance is properly pre-set for the preload to fall within the specified range after mounting, similar to the HUB I.

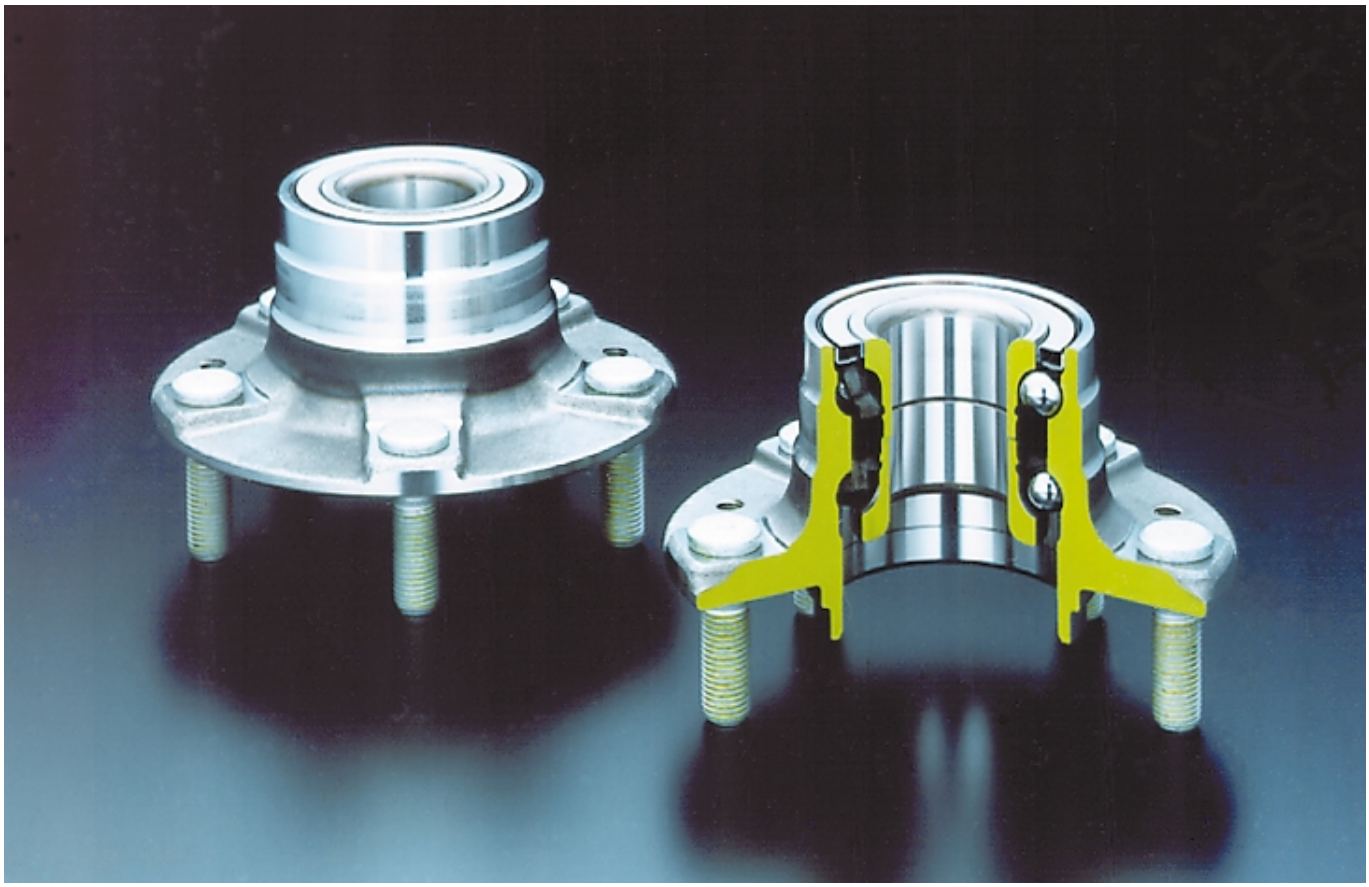

BWK (Ball bearings)

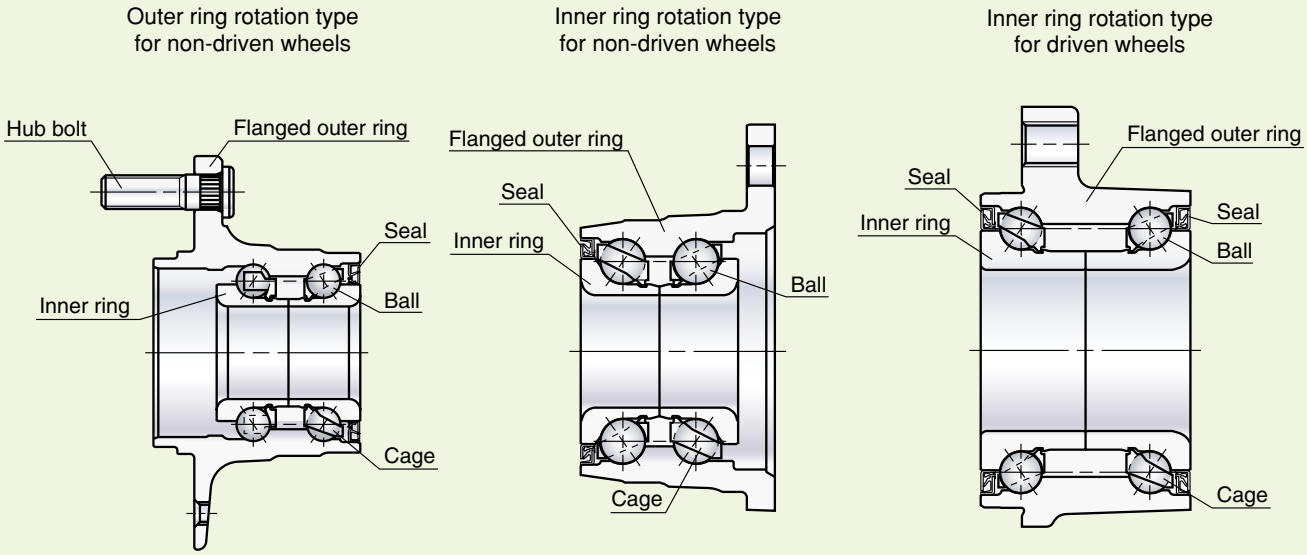



www.bergab.ru Берг АБ bergab@ya.ru Тел. (495)-228-06-21, факс (495) 223-3071

www.bergab.ru Берг АБ bergab@ya.ru Тел. (495)-228-06-21, факс (495) 223-3071



NSK uses bearing reference for hub unit bearings clarifying boundary dimensions, types, and specification codes. Below are examples of bearing reference:

Example: **27** **BWK** **04** **D2a** **y2**

- 27 — Bore diameter 27 mm
- BWK — HUB II (Ball bearings)
- 04 — Serial No.
- D2a — Special code
- y2 — Material code

Example: **54** **KWH** **01** **y2**

- 54 — Bore diameter 54 mm
- KWH — HUB II (Tapered roller bearings)
- 01 — Serial No.
- y2 — Material code

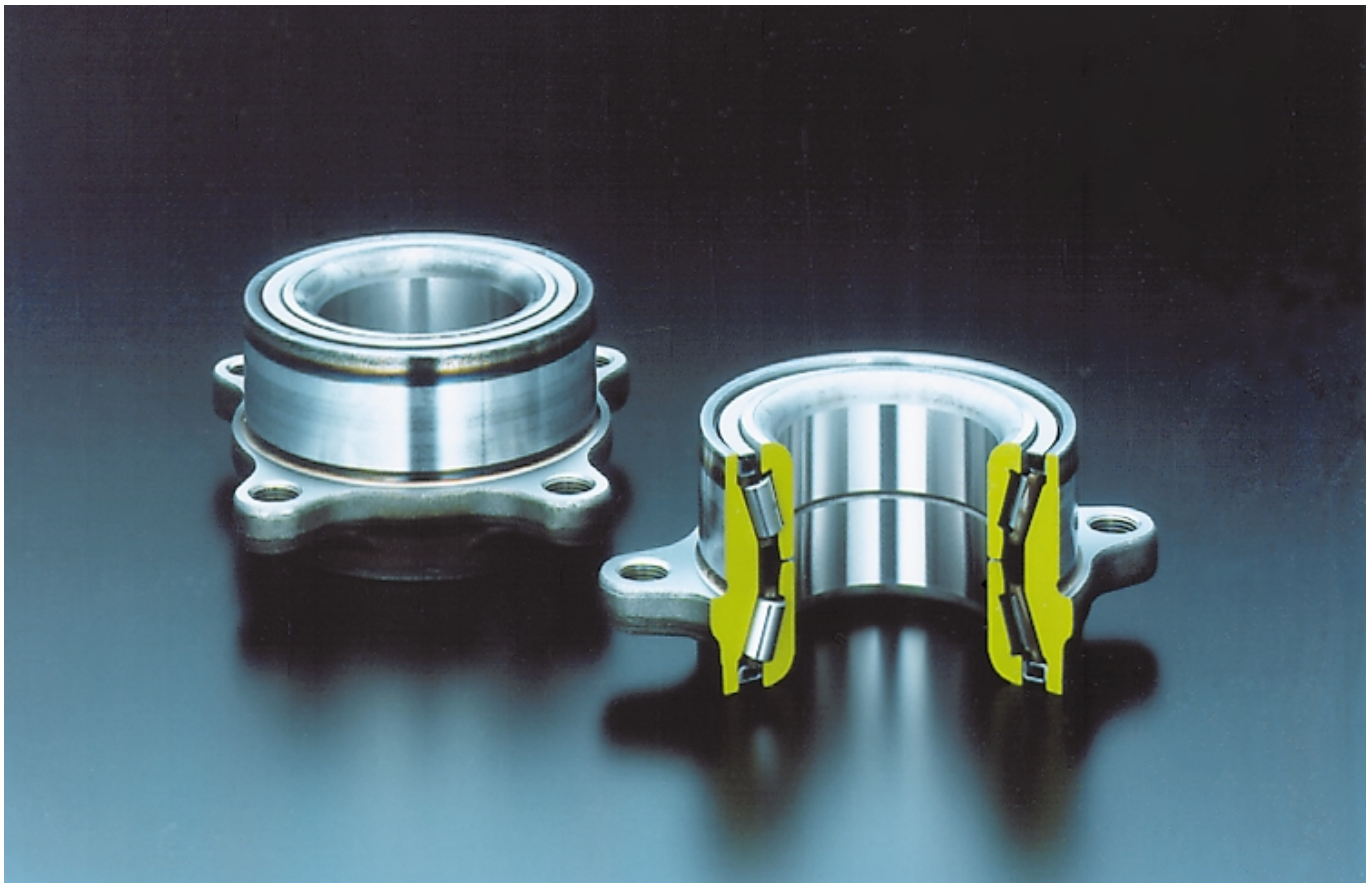

KWH (Tapered roller bearings)

Outer ring rotation type for non-driven wheels

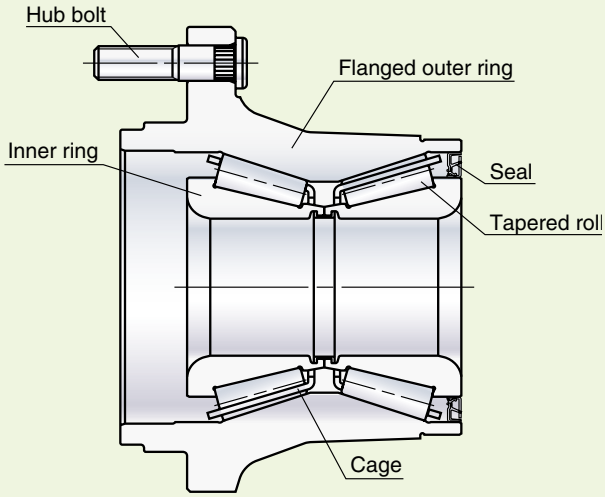


Inner ring rotation type for non-driven and driven wheels

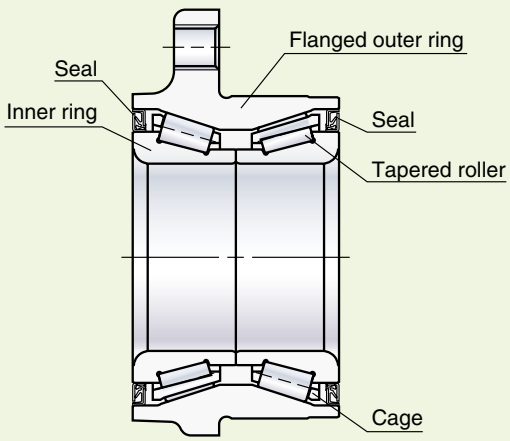


www.bergab.ru Берг АБ bergab@ya.ru Тел. (495)-228-06-21, факс (495) 223-3

www.bergab.ru Берг АБ bergab@ya.ru Тел. (495)-228-06-21, факс (495) 223-3071

## 1-4. HUB III

For HUB III, NSK uses proprietary bearing-type designations such as “BWKH” for ball bearings. The HUB III configuration is a BWD HUB I with flanged inner and outer rings.

- **Outer ring rotation type (for non-driven wheels):** Wheels and brake disks are mounted at the outer ring flanges. The inner ring flanges are mounted on the car body, and the preload is pre-adjusted.
- **Inner ring rotation type (for non-driven wheels):** Wheels and brake disks are mounted at the inner ring flanges. The outer ring flanges are mounted on the car body, and the preload is pre-adjusted.
- **Inner ring rotation type (for driven wheels):** Wheels and brake disks are mounted at the inner ring flanges. A splined bore allows bearings to be engaged to the CVJ shaft end. The outer ring flanges are fixed at the axle housing. The initial axial clearance is properly pre-set for the preload to fall within the specified range after the nuts are fastened.

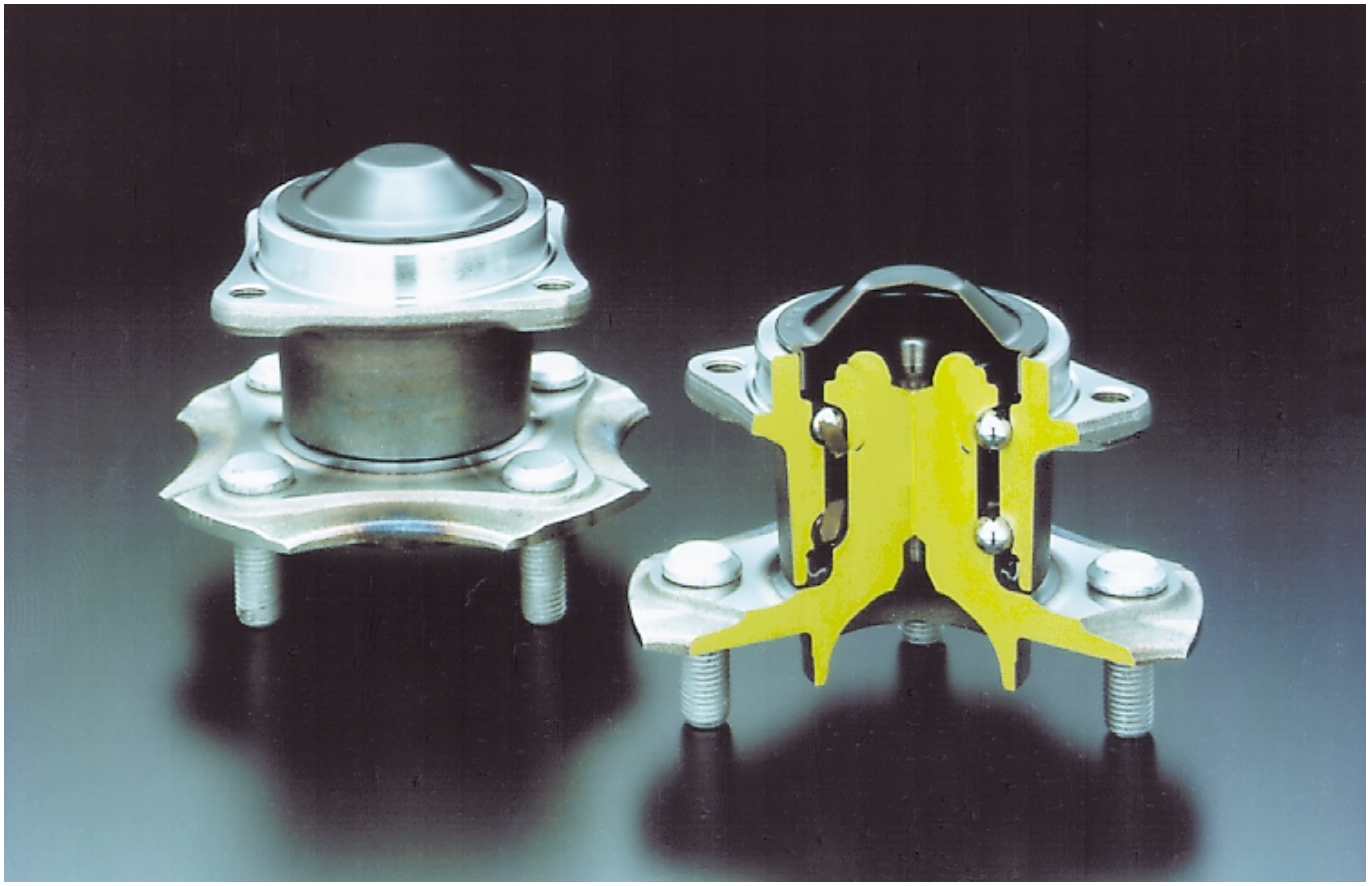

BWK (Ball bearings)

Inner ring rotation type for non-driven wheels

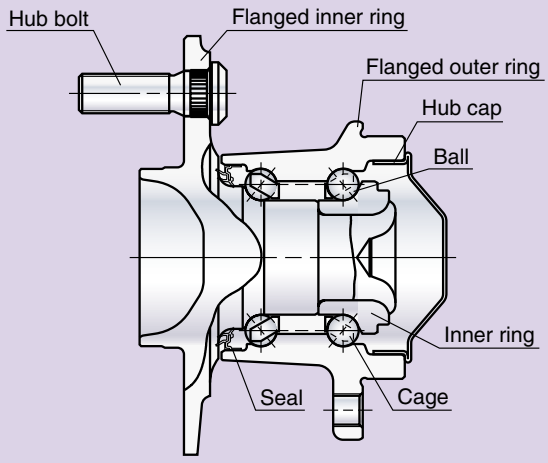


Outer ring rotation type for non-driven wheels

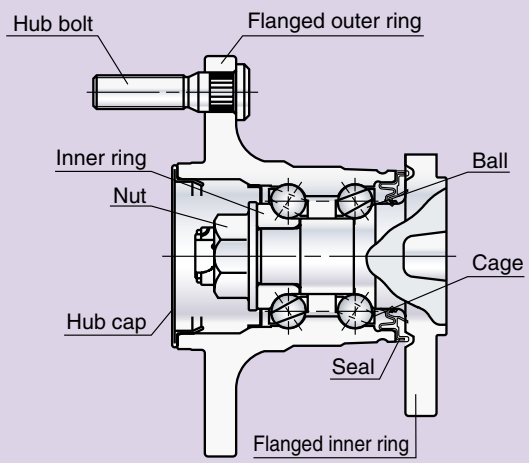



www.bergab.ru Берг АБ bergab@ya.ru Тел. (495)-228-06-21, факс (495) 223-3071

# Hub Unit Bearings

NSK uses bearing reference for hub unit bearings clarifying boundary dimensions, types, and specification codes. Below are examples of bearing reference:

Example: **52** **BWKH** **02** **y5**

- 52 — Ball pitch diameter 52 mm
- BWKH — HUB III (Ball bearings)
- 02 — Serial No.
- y5 — Material code

Example: **68** **BWKH** **S** **01** **y5**

- 68 — Ball pitch diameter 68 mm
- BWKH — HUB III (Ball bearings)
- S — Sensor integral
- 01 — Serial No.
- y5 — Material code

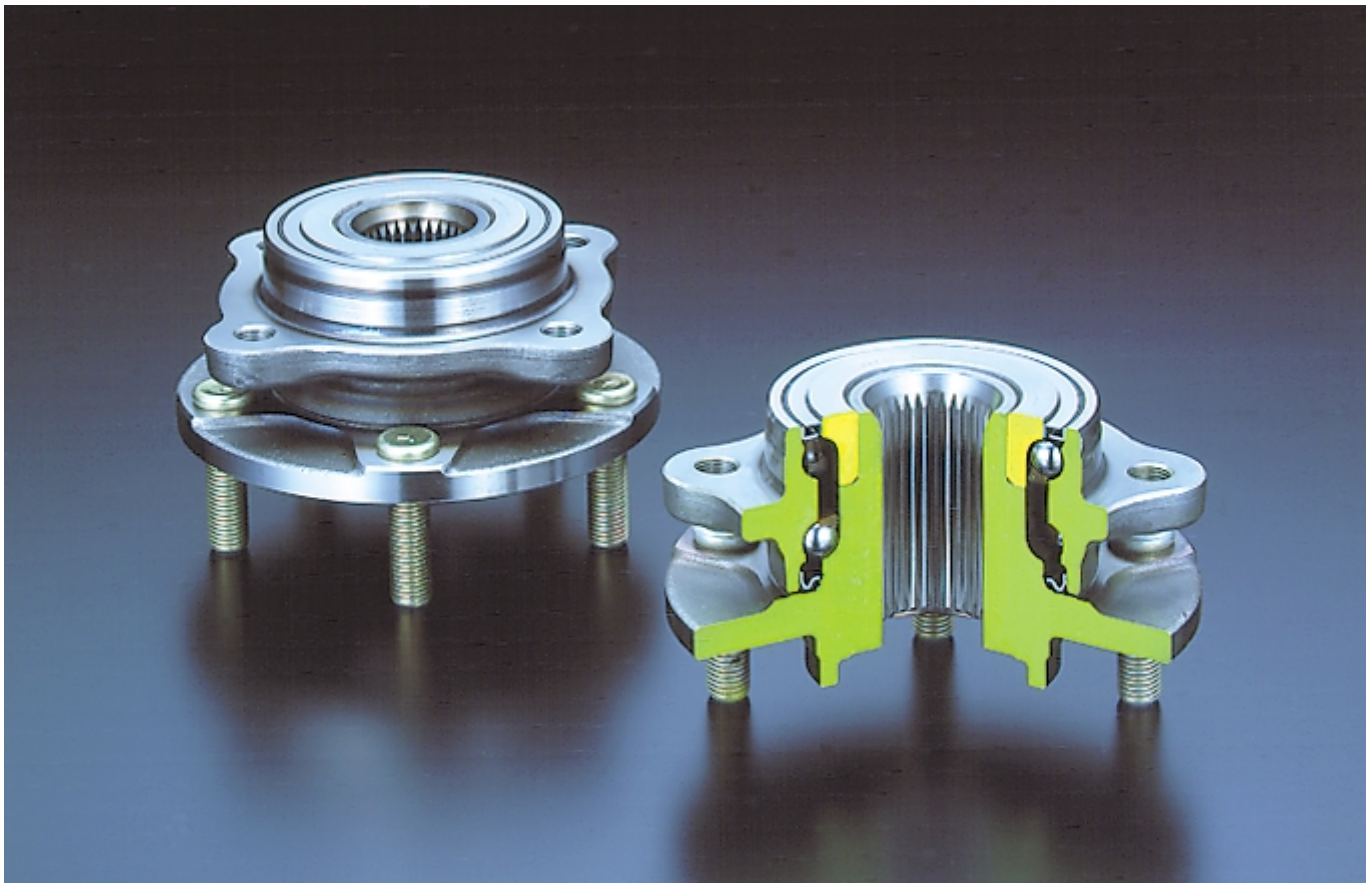

BWKH (Ball bearings)

Inner ring rotation type for driven wheels

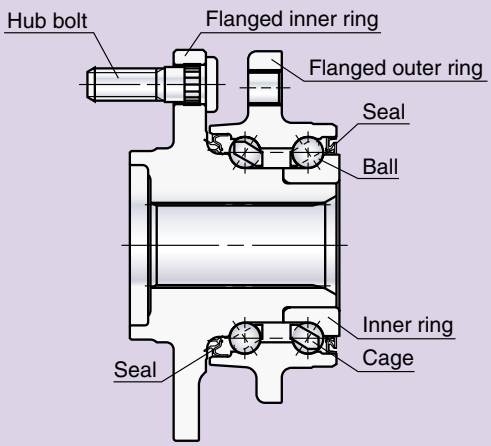

www.bergab.ru Берг АБ bergab@ya.ru Тел. (495)-228-06-21, факс (495) 223-3071



## 2-1. Overview of selection

While higher performance is demanded for hub unit bearings, the constraints and conditions of their application are becoming increasingly diverse. The selection of optimum bearing types satisfying such constraints and conditions requires the examination of various aspects. Please contact NSK for comprehensive technical services, such as functional evaluation, or technical consultations on design specifications in the development process, costs, and scheduling, for suitable selection of hub unit bearings. Fig. 1 shows the sample selection process of hub unit bearing types, and Fig. 2 shows sample specifications of hub unit bearings for automobiles.

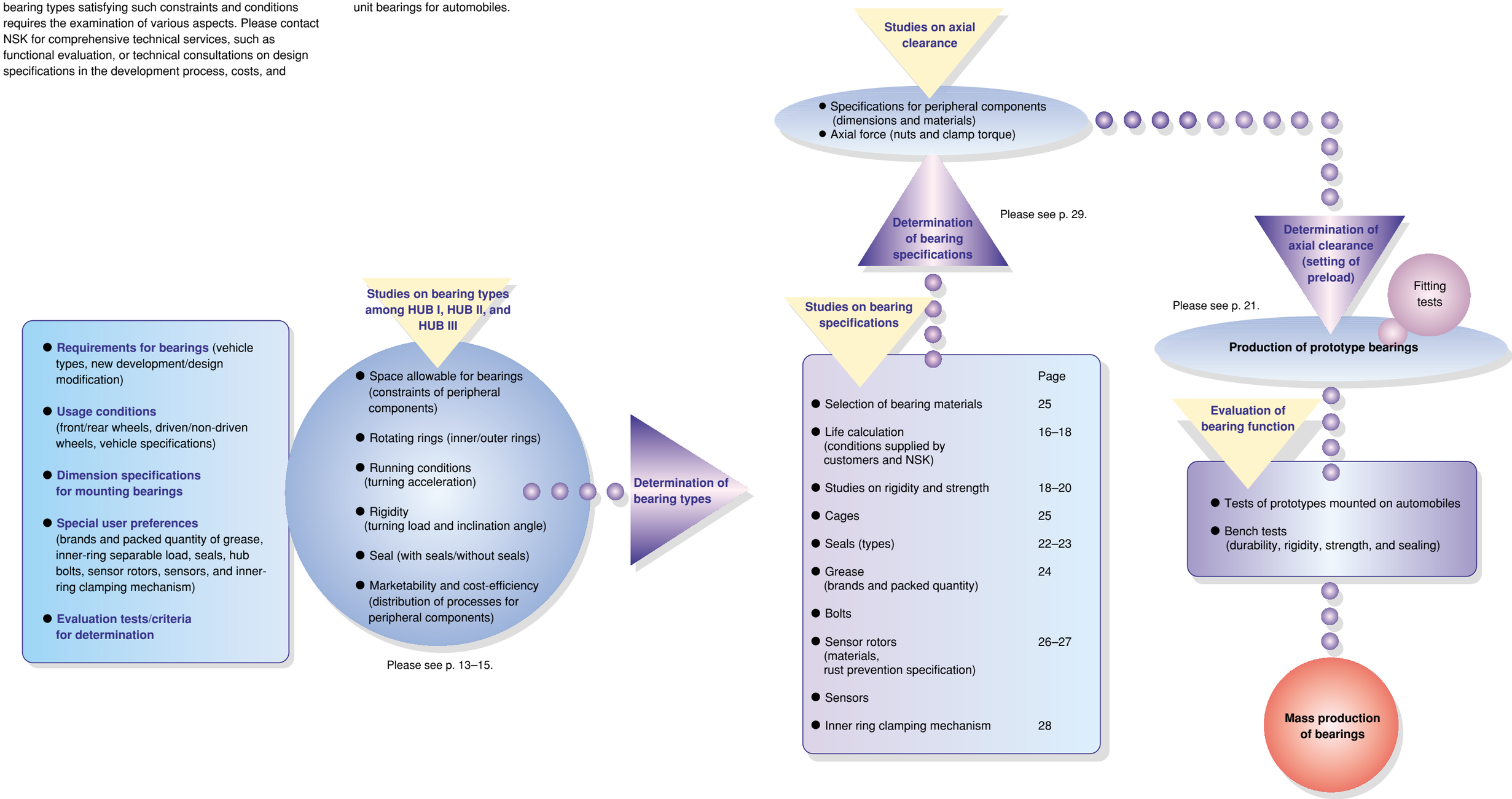


Fig. 1 Sample selection process of hub unit bearing types



www.bergab.ru Берг АБ bergab@ya.ru Тел. (495)-228-06-21, факс (495) 223-3071

www.bergab.ru Берг АБ bergab@ya.ru Тел. (495)-228-06-21, факс (495) 223-3071

## 2. Selection of Hub Unit Bearings

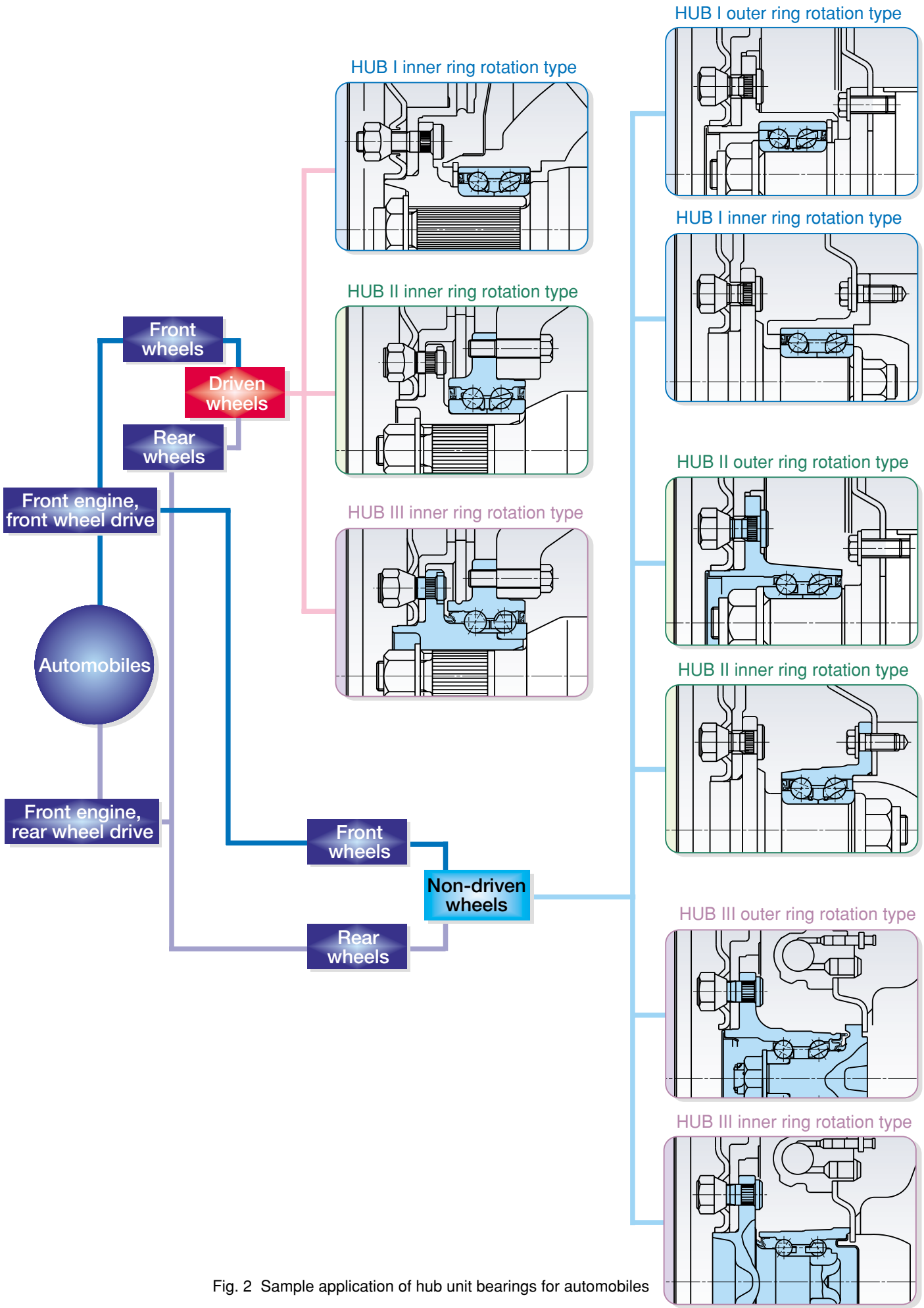


Fig. 2 Sample application of hub unit bearings for automobiles


www.bergab.ru Берг АБ bergab@ya.ru Тел. (495)-228-06-21, факс (495) 223-3071

www.bergab.ru Берг АБ bergab@ya.ru Тел. (495)-228-06-21, факс (495) 223-3071


## 2-2. Selection of bearing types

Table 1 describes the comparable features of the different bearing types to help customers select the suitable bearing. Carefully consider all aspects, including each type's features, peripheral components, mounting time, and facilities.

Table 1 Features of hub unit bearing types

**Application with 2 sets of single-row bearings**

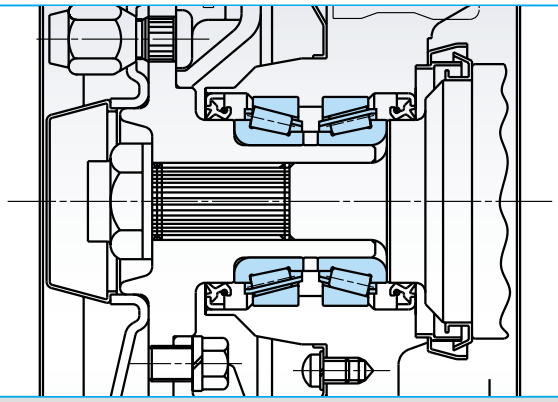

Features
- Long distances between effective load centers (non-driven wheels)
- Difficult preload setting
- Complicated mounting process
- Grease packing required
- Large packaging required

**HUB I**

I

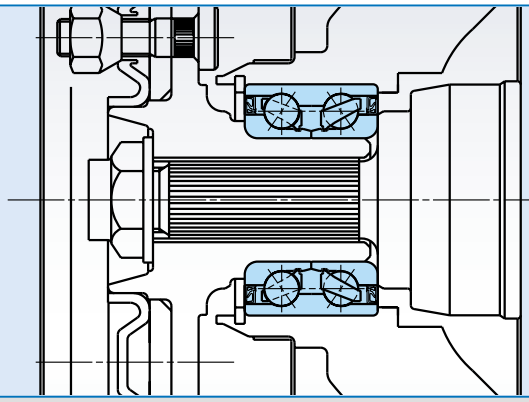

Features compared to 2 sets of single-row bearings
- Easier and more reliable preload setting
- Shorter distance between effective load centers
- Easy mounting process
- No spacer adjustment required
- No grease packing required
- Compact
- No operations required to press seals into hub units (integral seals are optional)

**HUB II**

II

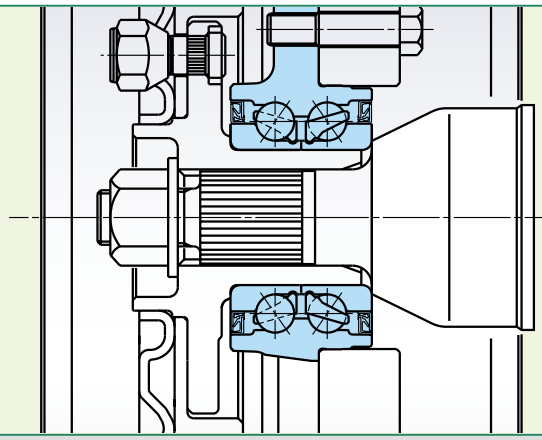

Features compared to HUB I
- Easy preload setting
- Easy mounting process
- No requirements to fit to knuckles
- Integral seals (improved reliability)
- Integral sensor rotors are optional (outer ring rotation)
- Lightweight and compact

**HUB III**

III

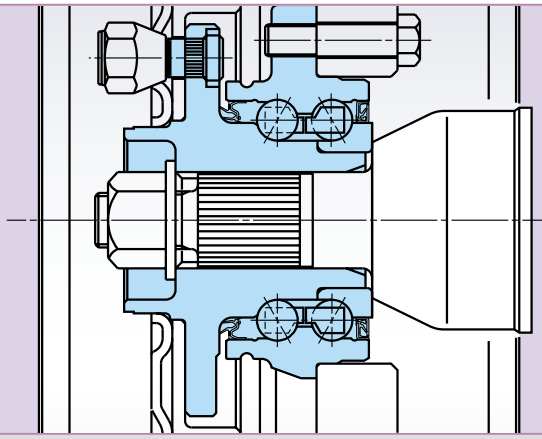

Features compared to HUB II
- Pre-set preload (non-driven wheels)
- Easier mounting
- Enhanced rigidity
- Easy incorporation of ABS sensors

www.bergab.ru Берг АБ bergab@ya.ru Тел. (495)-228-06-21, факс (495) 223-3

www.bergab.ru Берг АБ bergab@ya.ru Тел. (495)-228-06-21, факс (495) 223-3071



## 2-3. Types and characteristics of bearings

Table 2 shows the characteristics according to the requirements of hub unit bearing types.

Table 2 Types and characteristics of hub unit bearings

| Characteristics | Items | HUB I | | HUB II | | | | HUB III |
|---|---|---|---|---|---|---|---|---|
| | | BWD | KWD | BWK outer ring rotation | BWK inner ring rotation | KWH outer ring rotation | KWH inner ring rotation | BWKH |
| Functionality | Load capacity | ○ | ◎ | ○ | ○ | ◎ | ◎ | ○ |
| | Rigidity | △ | ◎ | △ | △ | ◎ | ◎ | ○ |
| | Rotation torque | ○ | △ | ◎ | ○ | △ | △ | ◎ |
| | Seizure resistance | ◎ | △ | ◎ | ◎ | △ | △ | ◎ |
| Compactness | Axle weight | △ | △ | ○ | ○ | ○ | ○ | ◎ |
| | Cross-section space | △ | △ | △ | △ | ◎ | ◎ | ◎ |
| | Width space | ○ | △ | ◎ | ◎ | ○ | ○ | ◎ |
| Reliability | Seals | △ Without seals<br>◎ With seals | △ Without seals<br>◎ With seals | ◎ | ◎ | ◎ | ◎ | ◎ |
| | Preload range under motion | △ | △ | ○ | ○ | ○ | ○ | ◎ |
| | Reliability in service | △ | △ | ○ | ○ | ○ | ○ | ◎ |
| Maintenance | Preload management | △ | △ | ◎ | ○ | ○ | ○ | ◎ |
| | Mounting and serviceability | △ | △ | ○ | ○ | ○ | ○ | ◎ |

◎Excellent ○ Good △ Fair


www.bergab.ru Берг АБ bergab@ya.ru Тел. (495)-228-06-21, факс (495) 223-3071

www.bergab.ru Берг АБ bergab@ya.ru Тел. (495)-228-06-21, факс (495) 223-3071


Selection of the dimensions of hub unit bearings requires consideration of their service life, rigidity, and strength.

## 3-1. Life calculation

This section shows the method used to calculate the bearing life. NSK performs life calculation using proprietary computer software, so please supply your application condition information to an NSK representative.

### (1) Required information

The service life of hub unit bearings is calculated based on the following information:

- Axle load on front wheels or rear wheels ..... Wf (N)
- Front or rear wheel tread ..... Tr (mm)
- Height of gravity center..... Hg (mm)
- Effective tire radius ..... Rw (mm)
- Offset amount..... S (mm)
  (External car body is positive (+) from bearing center.)

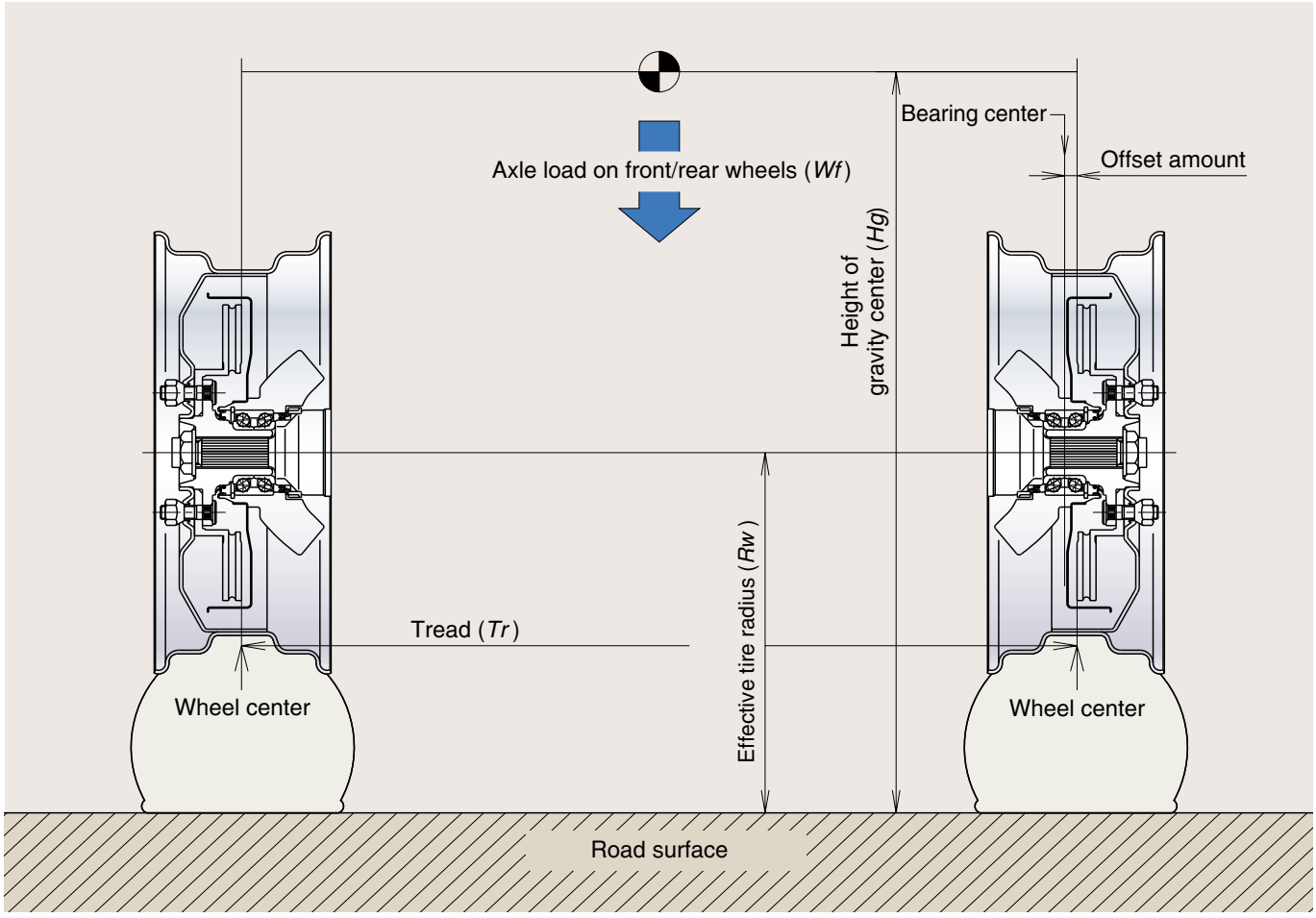


Fig. 3

### (2) Calculation of road reaction

The road reaction on wheels is calculated as follows:

$$R = \frac{f_w \cdot Wf}{2}\left(1 + \frac{2 \cdot Hg \cdot \zeta}{Tr}\right)$$

$$T = \frac{\zeta \cdot Wf}{2}\left(1 + \frac{2 \cdot Hg \cdot \zeta}{Tr}\right)$$

R: Vertical road reaction (N)
T: Horizontal road reaction (N)
$f_w$: Vertical load coefficient (coefficient of vertical road reaction)
ζ: Turning acceleration (G)
(Positive (+) in case of outside turning wheels. Negative (−) in case of inside turning wheels.)

### (3) Calculation of bearing load

The bearing load is calculated when automobiles take on vertical road reaction R and horizontal road reaction T from the road surface.

**(a) Radial load**

The radial load is calculated as follows:

$$F_{ri} = \frac{m}{\ell} R + \frac{Rw}{\ell} T$$

$$F_{ro} = \frac{n}{\ell} R - \frac{Rw}{\ell} T$$

$F_{ri}$: Radial load on inboard row of bearings (N)
$F_{ro}$: Radial load on outboard row of bearings (N)
$\ell$: Distance between effective load center (mm)
$m$: Distance from the effective space rating on outboard row to the wheel center (mm)

$$m = \frac{\ell}{2} - S$$

$n$: Distance from the point of load application of inboard row to the wheel center (mm)

$$n = \frac{\ell}{2} + S$$

www.bergab.ru Берг АБ bergab@ya.ru Тел. (495)-228-06-21, факс (495) 223-3

www.bergab.ru Берг АБ bergab@ya.ru Тел. (495)-228-06-21, факс (495) 223-3071



**(b) Axial load and load factor**

Axial load and load factor must satisfy the formulas below. As these formulas are extremely complicated, computers are used. This also allows ease of iterative calculations by modifying the axial clearance and preload.

Balance of axial load

$F_{ai} = F_{ao} + T$

$F_{ai}$: Axial load imposed on inboard row of bearings (N)

$F_{ao}$: Axial load imposed on outboard row of bearings (N)

Balance of axial displacement

$\delta_{ai} + \delta_{ao} = -\delta_O$

$\delta_{ai}$: Axial displacement on inboard row of bearings (mm)

$\delta_{ao}$: Axial displacement on outboard row of bearings (mm)

$\delta_O$: Axial clearance (mm)

(+ for clearance, − for preload)

Relation between radial load and axial load

$$F_{ai(O)} = F_{ri(O)} \cdot \tan\alpha \cdot \frac{J_a}{J_r}$$

$\alpha$: Contact angle of bearings

$J_a$: Axial integral

$$J_a = \frac{1}{\pi}\int_0^{\psi_0}\{1-\frac{1}{2\varepsilon}(1-\cos\psi)\}^t d\psi$$

$J_r$: Radial integral

$$J_r = \frac{1}{\pi}\int_0^{\psi_0}\{1-\frac{1}{2\varepsilon}(1-\cos\psi)\}^t \cos\psi\, d\psi$$

$\varepsilon$: Load factor

$\psi_0$: Angle indicating load range

Where $\varepsilon \leq 1$ $\cos\psi_0 = 1-2\varepsilon$

Where $\varepsilon \leq 1$ $\psi_0 = \pi$

$t$: Constant (3/2 for ball bearings, and 1/0.9 for roller bearings)

**(c) Calculation of bearing life**

The following formula produces the relation between the bearing life and load factor:

$$L = \left(\frac{J_1(0.5)}{J_1(0.5)} \cdot \frac{J_r}{J_1}\right)^p \cdot L_0$$

$L$: Calculated bearing life when load factor of $\varepsilon$ (per $10^6$ rotations)

$L_0$: Calculated bearing life when load factor of $\varepsilon$ equals 0.5 (per $10^6$ rotations)

$$L = \left(\frac{C_r}{F_r}\right)^p$$

$C_r$: Basic dynamic load rating (N)

$F_r$: Bearing radial load (N)

$P$: Constant (3 for ball bearings, 10/3 for roller bearings)

$J_1$: Radial integral against average rolling element load

$$J_r = \left(\frac{1}{\pi}\int_0^{\psi_0}\{1-\frac{1}{2\varepsilon}(1-\cos\psi)\}^r d\psi\right)^{1/8}$$

$r$: Constant (4.5 for both of ball bearings and roller bearings)

$s$: Constant (3 for ball bearings and 4 for roller bearings)

**(d) Average life of running distance**

Based on certain running conditions, calculations are made with the service life to obtain the average life of running distance.

$$L_m = \frac{1}{\Sigma\frac{S_r(i)}{L(i)}}$$

$L_m$: Average life (per $10^6$ rotations)

$S_r$ (i): Ratio under running conditions

L (i): Calculated life under running conditions (per $10^6$ rotations)

Average life Lm multiplied with running distance per rotation equals average life of running distance Lsm.

$$L_{sm} = 2\pi \cdot Rw \cdot L_m \text{ (km)}$$

Fig. 4 shows a graph of the calculation results.

Please contact NSK for life calculation of hub unit bearings.


www.bergab.ru Берг АБ bergab@ya.ru Тел. (495)-228-06-21, факс (495) 223-3071

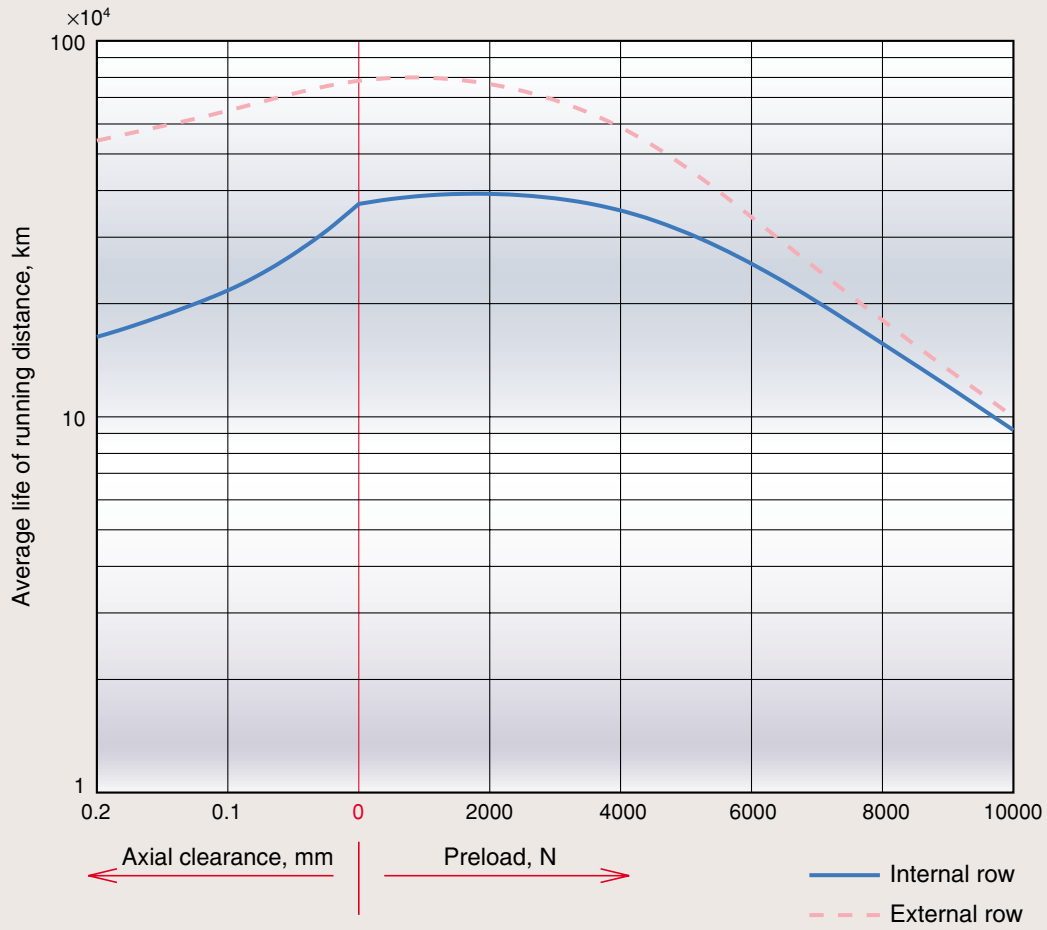


Fig. 4 Sample results of the bearing life calculation

## 3-2. Rigidity

The following elements must be taken into account regarding the rigidity of hub unit bearings:
(1) Deformation of rolling elements and raceway
(2) Deformation of outer and inner rings
(1) for HUB I, and (1), (2) for HUB II and III.

**(1) Deformation of rolling elements and raceway**

Rigidity of bearings (relative inclination angle $\theta$) are calculated based on axial displacement $\delta_{ai(o)}$ derived from the life calculation, and radial displacement $\delta_{ri(o)}$ derived from the load factor.

$$1 + \frac{\delta_{ai(0)}}{\delta_{ri(0)}} = 2 \cdot \varepsilon$$

$$\theta = \tan^{-1} \frac{\delta_{ri} - \delta_{ro}}{\ell}$$

$\delta_{ri}$: Radial displacement on inboard row (mm)
$\delta_{ro}$: Radial displacement on outboard row (mm)
$\theta$: Relative inclination angle between inboard and outboard rows

**(2) Deformation of outer and inner rings**

For HUB II and III, the Finite Element Analysis (FEA) is used to calculate deformation considering the flange rigidity of outer and inner rings.

Please contact NSK for rigidity calculations with FEA.

www.bergab.ru Берг АБ bergab@ya.ru Тел. (495)-228-06-21, факс (495) 223-3071



## 3-3. Strength

FEA is used for the analysis of flange strength and rigidity in hub unit bearings for optimal design. NSK applies this technology to reduce the weight of hub units when proposing highly rigid and lightweight shapes to automobile manufacturers.

**(1) Bore hub flange**
Relieved stress concentration in the inboard row of the hub units and reduced unit weight

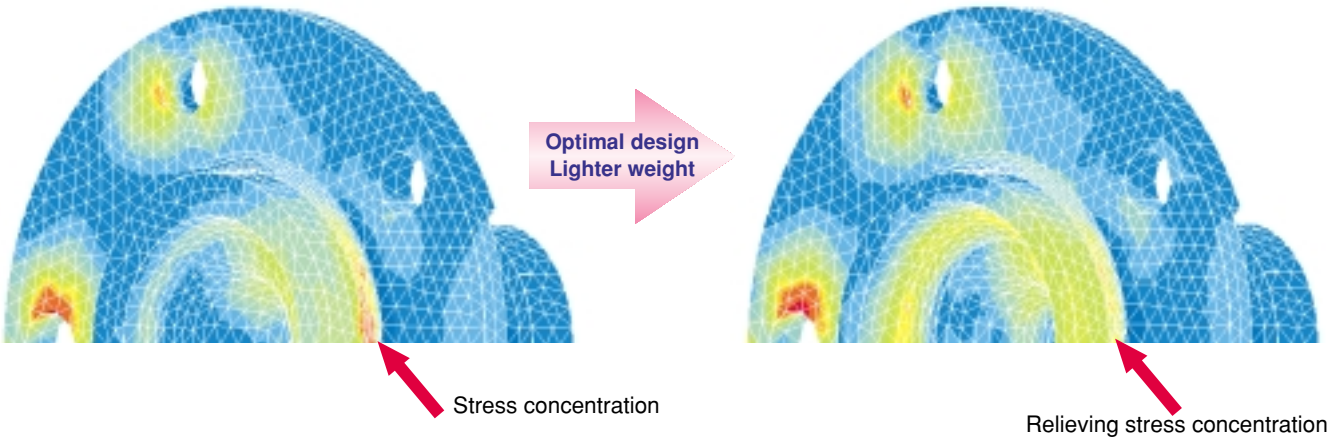


Fig. 5 Sample of FEA (bore flange)

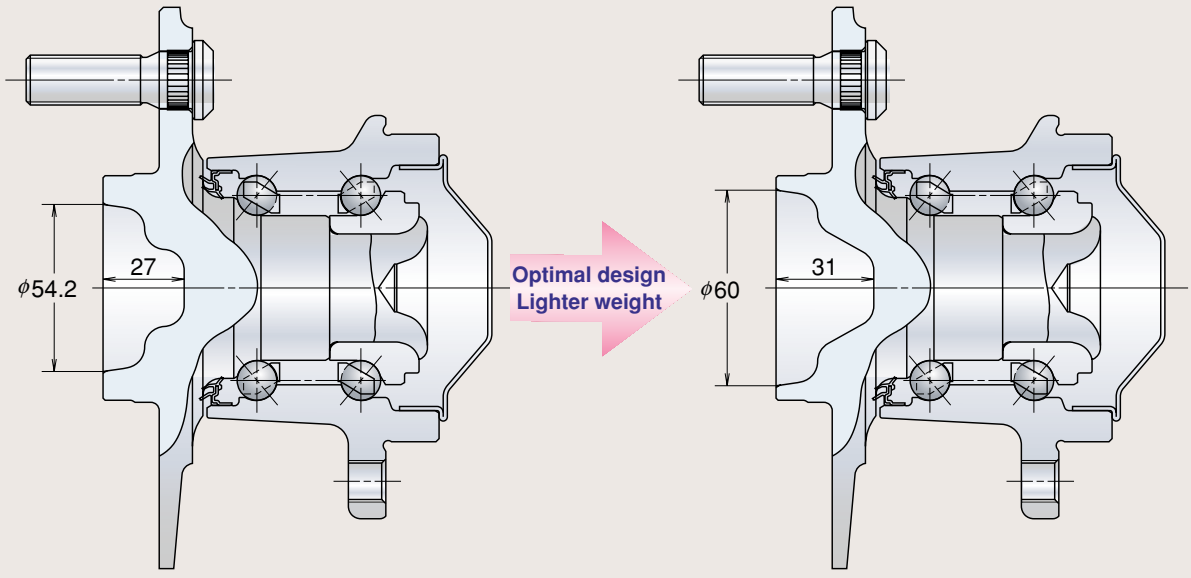


Fig. 6 Sample of optimal design (bore flange)


www.bergab.ru Берг АБ bergab@ya.ru Тел. (495)-228-06-21, факс (495) 223-3071

**(2) Outboard hub flange**
Realized optimal design of outside hub flanges by FEA for keeping stress concentration within the permissible range, and for weight reduction

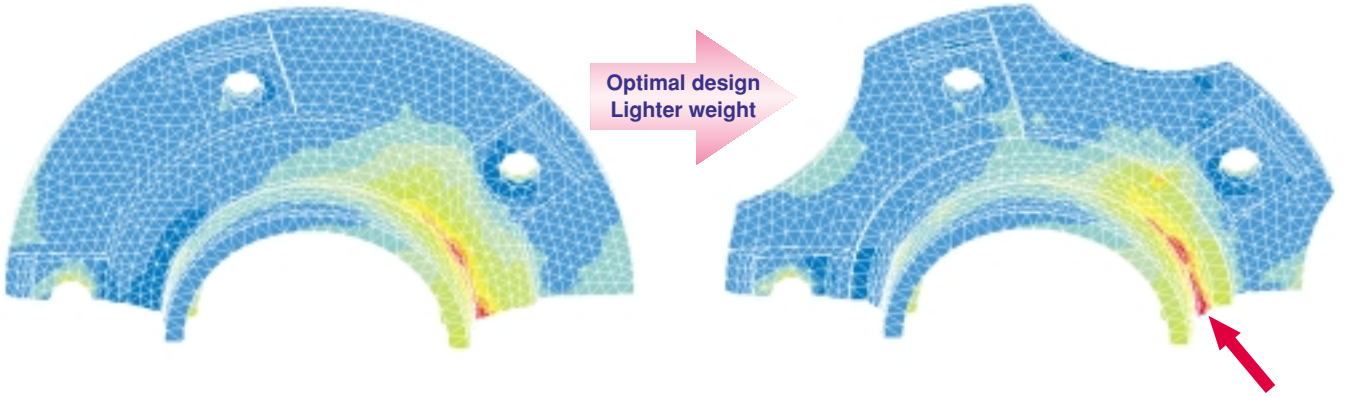


Fig. 7 Sample of FEA (outboard flange)

**(3) Hub flange thickness**
Realized optimal design of hub flange thickness by FEA for keeping stress concentration within the permissible range, and for weight reduction

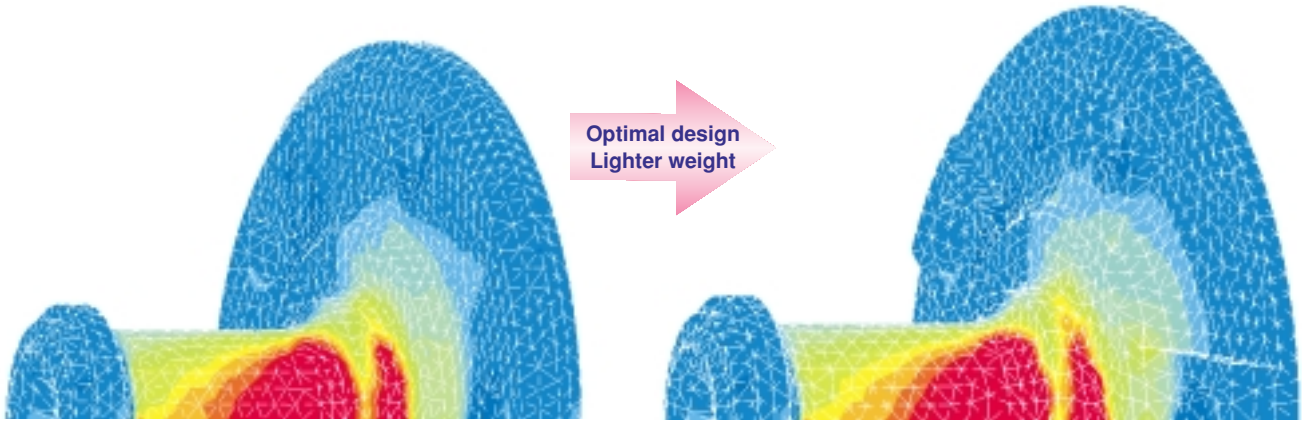


Fig. 8 Sample of FEA (flange thickness)

www.bergab.ru Берг АБ bergab@ya.ru Тел. (495)-228-06-21, факс (495) 223-3071

# 4. Fit and Preload of Hub Unit Bearings

Axial clearance and fit are specified to allow hub unit bearings to operate within an optimal preload range (life, rigidity, creep, and heat generation).

## 4-1. Fit and preload

The preload must be pre-adjusted based on the fit with other components and nut clamping force, which reduces axial clearance.

For calculating tolerances NSK has standard preload settings of zero to negative clearance using the 3σ method and maximum preload of 9800N using direct the sum method.

## 4-2. Recommended fitting measurements

Table 3 indicates the fitting measurements recommended for each type.

Table 3 Recommended fitting measurements

unit: mm

| Type | | Housing | Shaft |
|---|---|---|---|
| HUB I | Inner ring rotations | T7 −0.064 −0.094 | m6 +0.025 +0.009 |
| | Outer ring rotations | −0.061 −0.088 | -0.018 -0.034 |
| HUB II | Inner ring rotations | —— | m6 +0.025 +0.009 |
| | Outer ring rotations | —— | Loose |
| HUB III | Inner ring rotations | —— | —— |
| | Outer ring rotations | —— | —— |

Notes: 1) The dimensional tolerance of the diameter between inner rings and outer rings of hub unit bearings is in compliance with JIS0.
2) Excessive fastening by fitting bearing inner rings may cause defects (high pressure, deformation of pressed surface, plastic deformation, cracking of inner rings). Check to see that the maximum stress on the inner rings does not exceed 147 MPa.

## 4-3. Fitting tests

When mounting bearings on vehicles, use actual components to confirm that the axial clearance is properly set and the preload is within the appropriate range as specified by the users.

Table 4 lists the actual components required for fitting tests.

Table 4 Components required for fitting tests

unit: mm

| | Components | Usage conditions | Knuckle (housing) | Hub | CVJ | Spindle (shaft) | Nut washer | Snap ring | Others (sensor rotors, etc.) |
|---|---|---|---|---|---|---|---|---|---|
| HUB I | Driven wheels | Inner ring rotations | 6 | 6 | 6 | – | 18 | 6 | – |
| | Non-driven wheels | Inner ring rotations | 6 | 6 | – | – | 18 | 6 | – |
| | | Outer ring rotations | – | 6 | – | 6 | 18 | 6 | 6 |
| HUB II | Driven wheels | Inner ring rotations | – | 6 | 6 | – | 18 | – | – |
| | Non-driven wheels | Inner ring rotations | – | 6 | – | – | 18 | – | – |
| | | Outer ring rotations | – | – | – | 6 | 18 | – | 6 |
| HUB III | Driven wheels | Inner ring rotations | – | – | 6 | – | 18 | – | – |


www.bergab.ru Берг АБ bergab@ya.ru Тел. (495)-228-06-21, факс (495) 223-3071

www.bergab.ru Берг АБ bergab@ya.ru Тел. (495)-228-06-21, факс (495) 223-3071


NSK offer customers a flexible choice of seals (illustrated in Table 5 and Fig. 9) that vary in capabilities and cost.

Please submit your specific requirements for muddy water resistance, rotation torque, and cost to us for design evaluation.

Table 5 Hub unit bearing seals

| Seal type | Seal configuration | Muddy water resistance | Friction torque | Cost |
|---|---|---|---|---|
| High-integral seal | 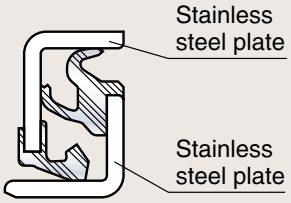 | AA | C | C |
| Low-torque high integral seal | 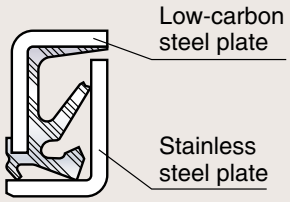 | A | BB | B |
| Side-lip garter spring seal | 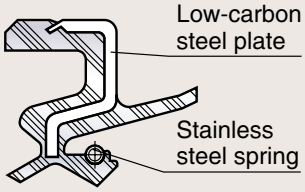 | A | BB | B |
| Triple lip seal | 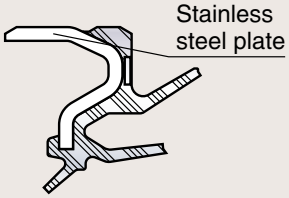 | A | A | BB |
| Garter spring seal | 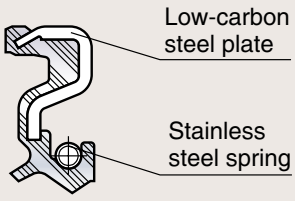 | B | A | BB |
| Double seal | 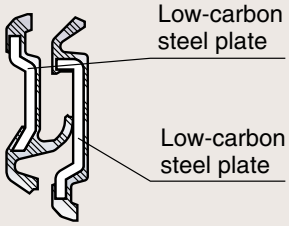 | BB | AA | A |
| Shaft seal | 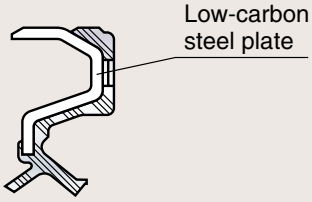 | C | AA | AA |

[Symbols] The ratings of AA > A > BB > B > C are ranked from AA (highest) to C (lowest).

www.bergab.ru Берг АБ bergab@ya.ru Тел. (495)-228-06-21, факс (495) 223-3

www.bergab.ru Берг АБ bergab@ya.ru Тел. (495)-228-06-21, факс (495) 223-3071

## 5. Hub Unit Bearing Seals

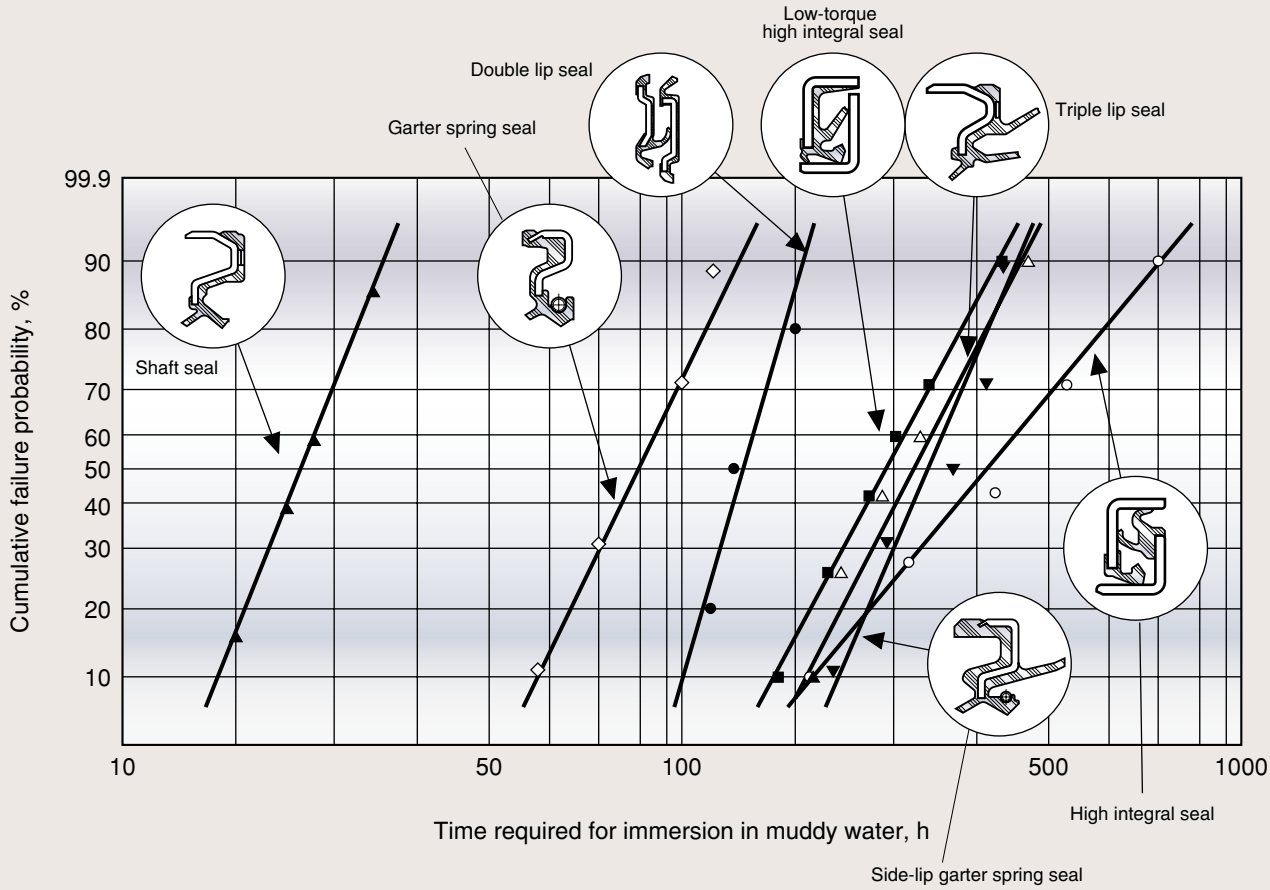


**Testing conditions**

- Mixture of elements in water: 125g of Kanto Loam powder and 50g of salt to 1 liter of water
- Water level: center of shaft
- Wobbling eccentricity: 0.4 TIR
- Number of rotations: 1000 rpm
- Cycle patterns: (immersion + rotations) (immersion + stop) (dry-up + stop) (dry-up + rotations)

Fig. 9 Muddy water resistance performance of hub unit bearing seals


www.bergab.ru Берг АБ bergab@ya.ru Тел. (495)-228-06-21, факс (495) 223-3071

www.bergab.ru Берг АБ bergab@ya.ru Тел. (495)-228-06-21, факс (495) 223-3071


Grease is used to lubricate hub unit bearings. Lubrication is applied to prevent metal contact between the hub unit's raceway rings and rolling elements, reducing friction and wear in order to extend its fatigue life.

Grease with urea as a thickener is especially recommended during transportation by rail, when strong vibrations may cause fretting damage to the hub unit raceway.

Table 6 Hub unit bearing grease

| Grease Brands | Manufacturers | Thickener | Base Oil |
|---|---|---|---|
| RareMax AF-1 | Kyodo Yushi Co., Ltd. | Urea | Mineral oil |
| 6459 Grease N | Showa Shell Sekiyu, K.K. | Urea | Mineral oil |
| Pyronoc Universal N-6C | Nisseki Mitsubishi Oil Corporation | Urea | Mineral oil |
| HB-1 | Kyodo Yushi Co., Ltd. | Urea | Mineral oil |
| Ronex MP | Exxon/Mobil | Lithium | Mineral oil |

www.bergab.ru Берг АБ bergab@ya.ru Тел. (495)-228-06-21, факс (495) 223-3071

www.bergab.ru Берг АБ bergab@ya.ru Тел. (495)-228-06-21, факс (495) 223-3071

# 7. Material for Hub Unit Bearings

## 7-1. Material for raceway rings and rolling elements

NSK offers customers various types of steel for raceway rings and rolling elements according to their usage conditions and locations, including its most popular, high quality (*1) steel SUJ2 (SAE52100).

*1: Unlike general-purpose steel, the steel used for bearings contains fewer non-metallic inclusions, improving the subsurface-originated rolling fatigue life.

### (1) SUJ2

For many years NSK has been striving to improve the quality of steel with the cooperation of bearing-steel makers. Through advances in the technology and facilities of steel mills and accumulated test data on bearing life, we have developed a high-quality, long-life bearing steel. This steel is a long-life material that is largely free of harmful non-metallic inclusions, and it is frequently adopted in hub unit bearings. It is used for the rollers and contact balls, the outer and inner rings of HUB I (BWD), the outer ring of HUB I (KWD), and as the standard material of the inner rings for HUB II and HUB III.

### (2) SUJ2 (EP Steel)

Please refer to EP Steel Catalog CAT. NO. 5001 (super-long life, highly reliable bearing steel) for detailed information.
Based on NSK's proprietary evaluation method, the technology for mass production of high-purity steel was established, and resulted in SUJ2 (EP Steel), which has a subsurface-originated roller fatigue life that is even longer than that of SUJ2.
This material is used for the outer and inner rings of HUB I (BWD) and the inner rings of HUB I (KWD), HUB II, and HUB III.

### (3) NSJ2

The debut of a new bearing material, NSJ2, is the result of NSK's research and analysis efforts based on its proprietary fatigue analysis technology. It is the most popular material on the market, surpassing SUJ2 in its resistance to the surface-originated fatigue that shortens bearing life. This material is used for the outer and inner rings of HUB I (BWD), HUB II, and HUB III.

### (4) S53CG (in compliance with SAE1055)

This is an induction heat-treated material, which can be inexpensively die-forged into complex shapes. It is mainly used for parts such as axle components, which require impact-load resistance. Induction heat treatment allows NSK to control the hardness of the component parts. This material is used for the outer rings of HUB II and III, and the flanged inner rings of HUB III.

### (5) Carburizing Steel (SCr420H)

Carburizing allows proper hardening depth, a dense structure, and appropriate surface and core hardness of materials in order to extend the fatigue life of bearings. This material is used for the inner rings of HUB I (KWD), HUB II, and HUB III.

### (6) Hi-TF Steel

Please refer to Super TF Bearings, Hi-TF Bearings Catalog CAT. No. 399 for detailed information.
Hi-TF steel was developed in order to extend service life under conditions in which lubricants become mixed with foreign matter, providing excellent resistance against wear and seizure at a reasonable cost. This material is used for the inner rings of HUB II (KWH).

### (7) New-TF Steel

Please refer to New-TF Bearings Catalog CAT. No. 1213 for detailed information.
New-TF steel has the advantage of long service life under conditions in which lubricants become mixed with foreign matter, maintaining excellent resistance against wear and seizure at a reasonable cost. This material is used for the inner rings of HUB II (KWH).

## 7-2. Cage material

The cage for hub unit bearings is made from Nylon 66 with glass fiber. Pressed cages for HUB I (KWD) are made of low-carbon steel.


www.bergab.ru Берг АБ bergab@ya.ru Тел. (495)-228-06-21, факс (495) 223-3071

Now that improved automotive safety has become a primary goal of manufacturers, the Antilock Brake System (ABS) has become widely used in automobiles, ensuring safe braking on slippery and icy roads.
NSK has been active in the research and development of ABS-related products.

## 8-1. Multi-pole magnetic encoder for ABS

The next-generation ABS uses annular magnets for multi-pole encoding, instead of the conventional magnetic sensor rotor. The semiconductor magnetic sensor (active sensor) fixed on the car body detects the rotation speed of the wheel.

**(1) Types**

There are two types of multi-pole magnetic encoder: the radial type, for setting the sensor close to the radius; and the axial type, for setting the sensor close to the axle.

**(2) Features**

By using the active sensor, the multi-pole magnetic encoder allows constant output without the sensor's output voltage relying on the rotation speed of the sensor rotor.
As a result, the encoder can detect the rotation speed of the wheel running at low speed. The active sensor requires no magnet, reducing cost and weight.

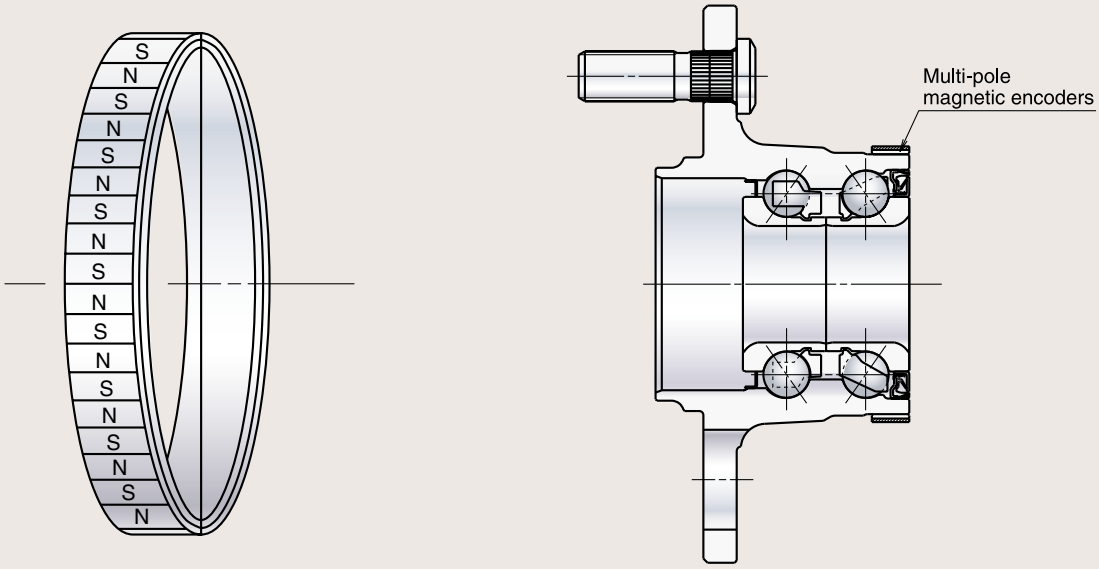


Fig. 10 Sample of radial type structure

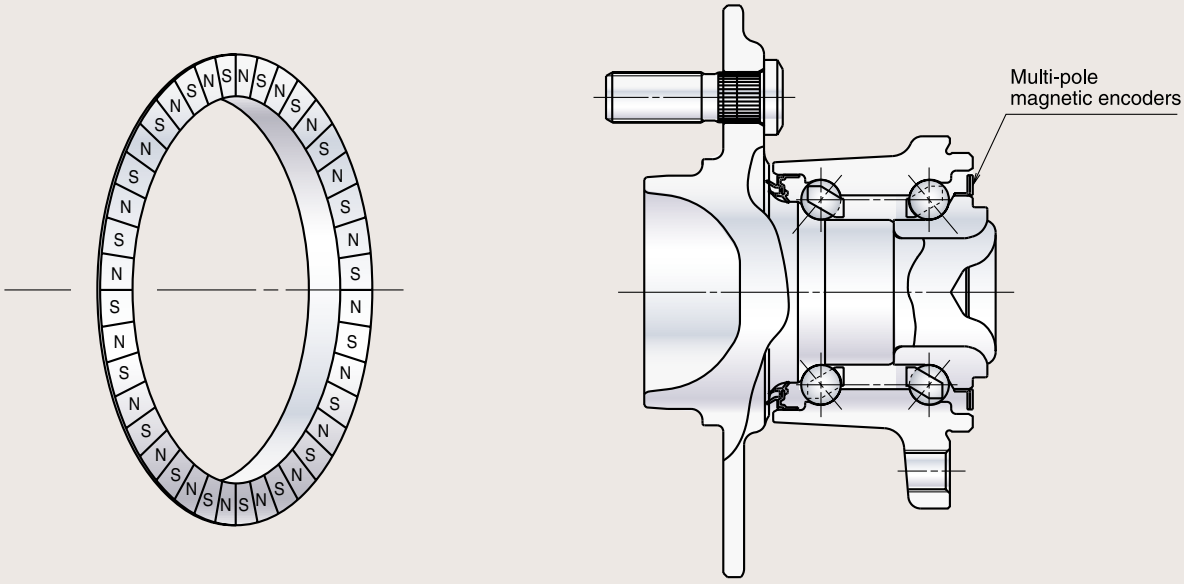


Fig. 11 Sample of axial type structure

www.bergab.ru Берг АБ bergab@ya.ru Тел. (495)-228-06-21, факс (495) 223-3071


## 8-2. Hub unit bearings with integral ABS sensors

**(1) Structure**

Hub unit bearings with integral ABS sensors incorporate rotation-detecting sensors and the sensor rotors of magnetic rings or multi-pole magnetic encoders. Assembly with electromagnetic sensors (passive sensors) limits the sensor mounting space, making it difficult to mount sensors. NSK has solved these space issues by adopting annular passive sensors with highly efficient magnetic circuits.

**(2) Features**

●Lightweight and compact

Bearings with integral sensors and sensor rotors result in lighter, more compact hub units. Incorporating sensor rotors and high integral seals further reduces the size of hub units, increasing the flexibility of the design in the axial direction.

●Easier mounting of hub units

Incorporating sensors and sensor rotors eliminates air gap adjustments between the sensors and sensor rotors, which are normally performed on automobile assembly lines, thereby facilitating the mounting of hub units.

●Prevents the harmful effects of foreign objects on hub unit performance

Incorporating sensors and sensor rotors prevents lower performance caused by the intake of gravel from the road.

●High output sensors

Higher sensor output values even at low driving speeds enable stable control.

Structures of hub unit bearings with integral sensors for non-driven wheels (Fig. 12) and for driven wheels (Fig. 13) are described below.

Please contact NSK for hub unit bearings with integral ABS sensors.

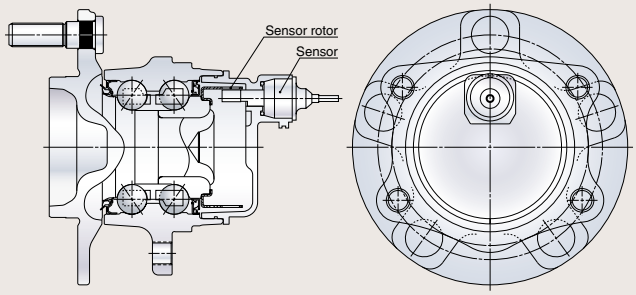


Integral end cap type active sensor

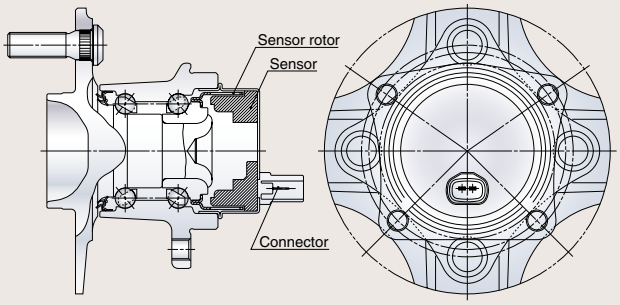


Integral annular passive sensor

Fig. 12 Structure of HUB III for non-driven wheels with integral ABS sensors

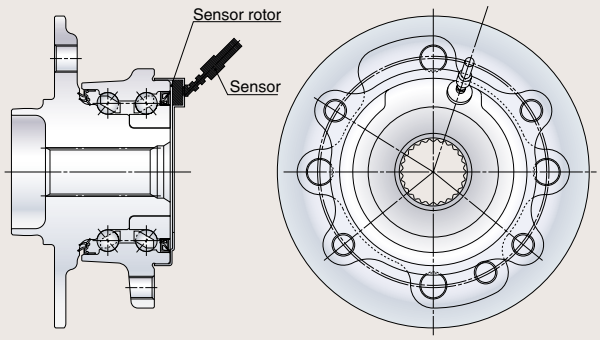


Multi-pole magnetic encoder + Active sensor

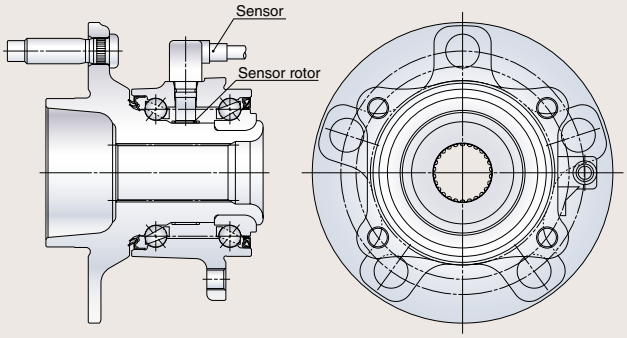


Integral sensors between rows

Fig. 13 Sample of structure for HUB III for driven wheels with integral ABS sensor


www.bergab.ru Берг АБ bergab@ya.ru Тел. (495)-228-06-21, факс (495) 223-3071

www.bergab.ru Берг АБ bergab@ya.ru Тел. (495)-228-06-21, факс (495) 223-3071


NSK's latest proposals are hub unit bearings with swaging as a HUB III inner ring clamping mechanism.
Hub unit bearings for non-driven wheels require fewer components compared to the conventional nut-clamping method, and manufacturers can benefit from their lower cost, reduced size, and lighter weight. Hub unit bearings for driven wheels require no preload control at mounting, making it easier to mount them to axles.

Figs. 14 and 15 shows samples of the inner ring clamping mechanism.
Please contact NSK for further information about the swaging technique.

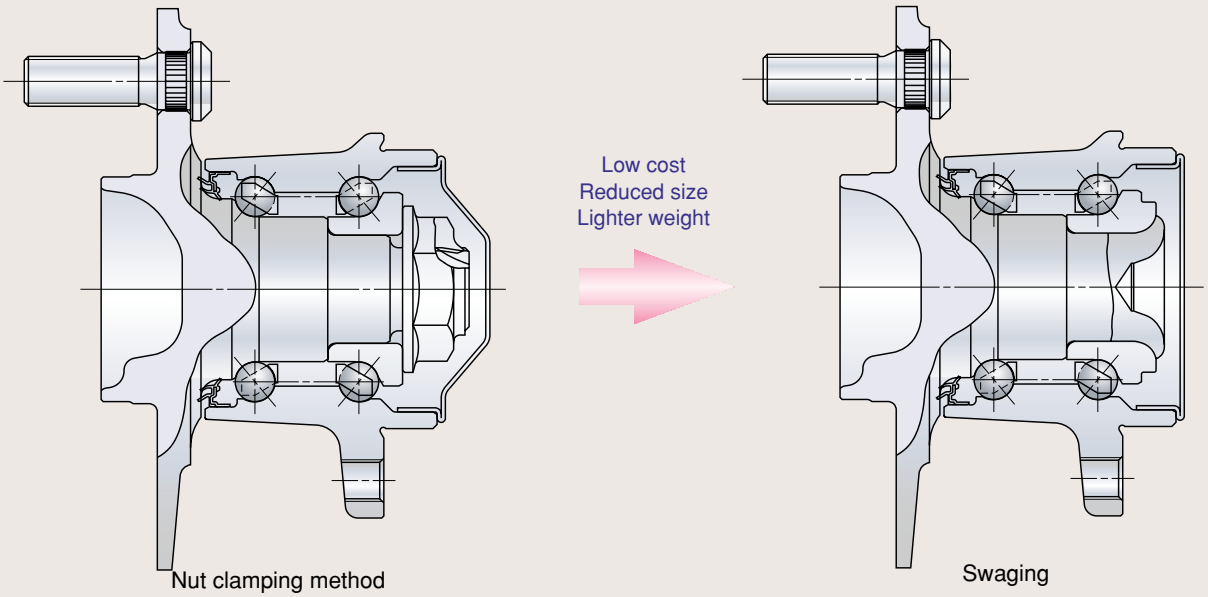


Fig. 14 Structure of the inner ring clamping mechanism for non-driven wheels

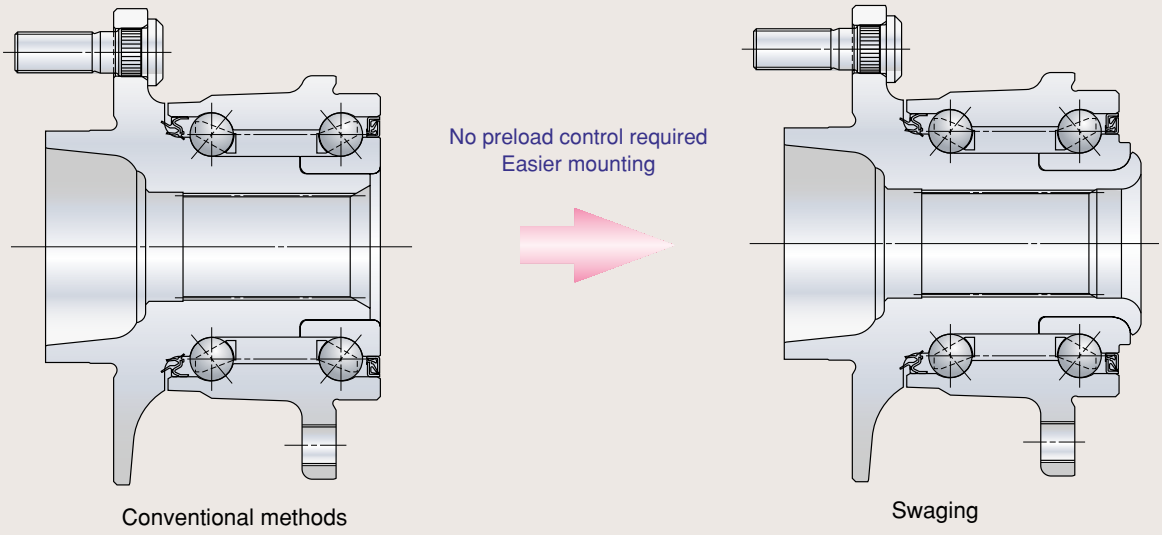


Fig. 15 Structure of the inner ring clamping mechanism for driven wheels

www.bergab.ru Берг АБ bergab@ya.ru Тел. (495)-228-06-21, факс (495) 223-3071

www.bergab.ru Берг АБ bergab@ya.ru Тел. (495)-228-06-21, факс (495) 223-3071

# 10. Recommended Bearing Nomenclatures Hub Unit Bearings

The following table indicates our recommended list of well-established bearings according to vehicle models, displacement, front/rear wheels, and axle load:

Table 7 Bearings reference recommended

(1) For front engine, front wheel drive automobiles

| Displacement (cc) | HUB I | | HUB II | | HUB III | |
|---|---|---|---|---|---|---|
| | Front wheels | Rear wheels | Front wheels | Rear wheels | Front wheels | Rear wheels |
| ≀ 660 | 35BWD19E | 25BWD01 | ☆ | 27BWK02A* | ☆ | ☆ |
| ≀ 1300 | 38BWD22 | ↑ | ☆ | 27BWK06*<br>28BWK12** | 58BWKH03 | 44BWKH10B |
| 1300 ≀ 1800 | ↑ | ↑ | ☆ | ↑ | ↑ | ↑ |
| 1500 ≀ 2000 | 40BWD12 | 30BWD04 | 43BWK07** | 30BWK13A*<br>30BWK17** | 66BWKH02A | 49BWKH04A |
| 2000 ≀ 3000 | 43BWD06B | 32BWD05 | ↑ | 30BWK18* | ↑ | 55BWKH01 |

(2) For front engine, rear wheel drive automobiles

| Displacement (cc) | HUB I | | HUB II | | HUB III | |
|---|---|---|---|---|---|---|
| | Front wheels | Rear wheels | Front wheels | Rear wheels | Front wheels | Rear wheels |
| 2000 ≀ 2500 | 32BWD05 | 43BWD06B | 30BWK18* | 43BWK07** | 49BWKH04A | 66BWKH02A |
| 2500 ≀ | 38BWD23A<br>38KWD04A | 43BWD06B<br>46KWD04 | ↑ | ☆ | 55BWKH01 | ↑ |

Notes: 1) Please contact NSK for products with the ☆ symbol.
2) In the columns under HUB II, * indicates outer ring rotation types, ** indicates inner ring rotation types.
3) All HUB III are inner ring rotation types.


www.bergab.ru Берг АБ bergab@ya.ru Тел. (495)-228-06-21, факс (495) 223-3071

www.bergab.ru Берг АБ bergab@ya.ru Тел. (495)-228-06-21, факс (495) 223-3071


# HUB I Dimension Table

**BWD type**

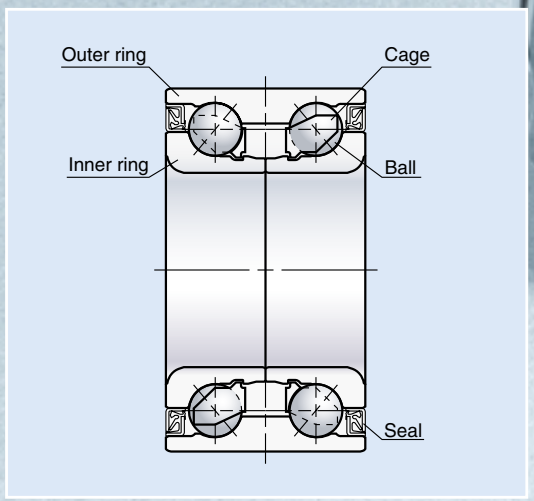


**KWD type**

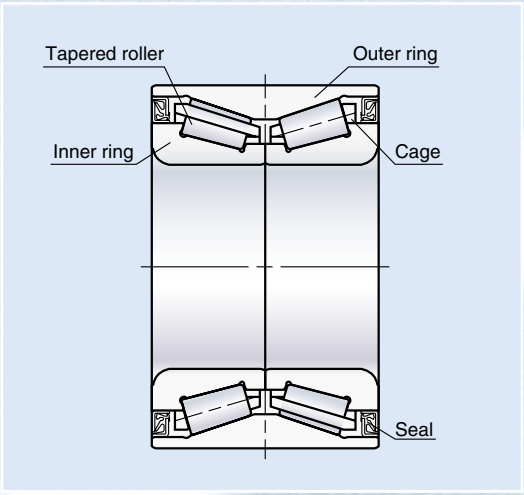


www.bergab.ru Берг АБ bergab@ya.ru Тел. (495)-228-06-21, факс (495) 223-3

www.bergab.ru Берг АБ bergab@ya.ru Тел. (495)-228-06-21, факс (495) 223-3071

## BWD type
## for driven/non-driven wheels

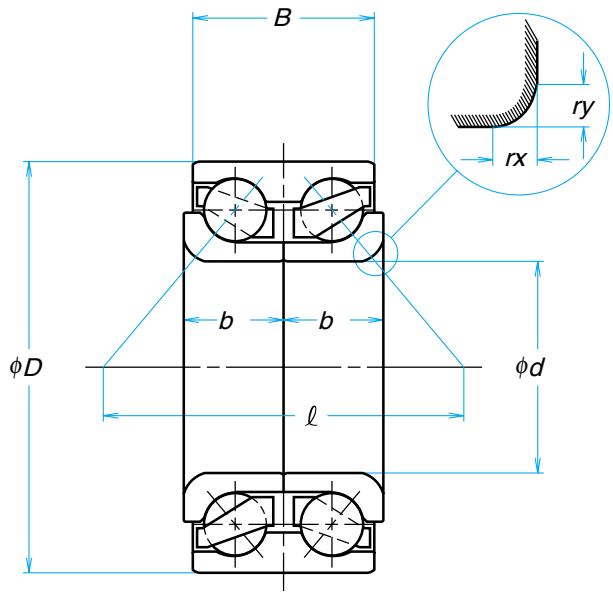


Standard type

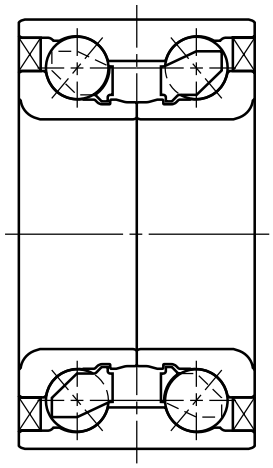

Seal integral type

| Boundary dimensions (mm) | | | | | | Distance between effective load centers ℓ (mm) | Bearing reference | Basic load ratings (N) | | Seal integral type | Mass (kg) (approx.) |
|---|---|---|---|---|---|---|---|---|---|---|---|
| | | | | | | | | Double row | | | |
| d | D | B | b | rx (Min.) | ry (Min.) | | | $C_r$ | $C_{or}$ | | |
| 25 | 52 | 42 | 21 | 2.6 | 2.6 | 52.0 | 25BWD01 | 28 500 | 21 400 | ○ | 0.36 |
| 27 | 60 | 50 | 25 | 3.6 | 3.6 | 52.8 | 27BWD01J | 42 500 | 32 500 | ○ | 0.36 |
| 28 | 58 | 42 | 21 | 2.8 | 2.8 | 54.1 | 28BWD03A | 33 500 | 25 700 | ○ | 0.40 |
| | 61 | 42 | 21 | 3.6 | 3.6 | 55.5 | 28BWD01A | 38 500 | 29 800 | – | 0.53 |
| 30 | 55 | 26 | 13 | 1.2 | 1.2 | 39.1 | 30BWD08 | 15 600 | 14 700 | ○ | 0.26 |
| | 63 | 42 | 21 | 3.6 | 3.6 | 57.3 | 30BWD01A | 40 500 | 33 000 | – | 0.55 |
| | 68 | 45 | 22.5 | 3.6 | 3.6 | 53.5 | 30BWD04 | 52 500 | 40 000 | ○ | 0.69 |
| 32 | 72 | 45 | 22.5 | 3.6 | 3.6 | 61.4 | 32BWD05 | 58 500 | 45 000 | ○ | 0.80 |
| 34 | 64 | 37 | 18.5 | 2 | 1.2 | 52.5 | 34BWD04B | 36 500 | 31 000 | ○ | 0.82 |
| | 64 | 37 | 18.5 | 3.3 | 2.4 | 50.7 | 34BWD11 | 36 500 | 31 000 | ○ | 0.46 |
| | 66 | 37 | 18.5 | 3.3 | 2.4 | 51.0 | 34BWD10B | 40 500 | 33 500 | ○ | 0.51 |
| | 68 | 42 | 21 | 3.5 | 2.5 | 55.7 | 34BWD09A | 44 000 | 35 000 | ○ | 0.64 |
| | 68 | 37 | 18.5 | 2 | 1.2 | 55.7 | 34BWD09A | 44 000 | 35 000 | ○ | 0.54 |
| 35 | 65 | 37 | 18.5 | 3 | 3 | 51.0 | 35BWD19E | 36 500 | 31 000 | ○ | 0.48 |
| | 68 | 30 | 16.5 | 3.5 | 3.5 | 52.4 | 35BWD07 | 42 500 | 36 500 | – | 0.48 |
| | 68 | 30 | 16.5 | 3.5 | 3.5 | 59.6 | 35BWD07A | 40 500 | 34 500 | – | 0.48 |
| | 68 | 36 | 19.5 | 3.5 | 3.5 | 58.4 | 35BWD16 | 42 500 | 36 500 | – | 0.48 |
| | 72 | 31 | 16.5 | 3.5 | 3.4 | 53.0 | 35BWD06A | 50 000 | 40 000 | – | 0.55 |
| 36 | 68 | 33 | 16.5 | 3.5 | 3.1 | 52.4 | 36BWD04 | 42 500 | 36 500 | – | 0.48 |
| | 72 | 42 | 21 | 3 | 3 | 61.1 | 36BWD03 | 50 000 | 40 000 | – | 0.68 |
| | 72.041 | 34 | 17 | 2.5 | 2 | 51.6 | 36BWD01B | 50 000 | 40 000 | – | 0.57 |
| 37 | 74 | 45 | 22.5 | 2.4 | 2.4 | 60.9 | 37BWD01 | 52 500 | 44 000 | ○ | 0.79 |


www.bergab.ru Берг АБ bergab@ya.ru Тел. (495)-228-06-21, факс (495) 223-3071

www.bergab.ru Берг АБ bergab@ya.ru Тел. (495)-228-06-21, факс (495) 223-3071



| Boundary dimensions (mm) | | | | | | Distance between effective load centers $\ell$ (mm) | Bearing reference | Basic load ratings (N) Double row | | Seal integral type | Mass (kg) (approx.) |
|---|---|---|---|---|---|---|---|---|---|---|---|
| $d$ | $D$ | $B$ | $b$ | $rx$ (Min.) | $ry$ (Min.) | | | $C_r$ | $C_{or}$ | | |
| 38 | 70 | 37 | 18.5 | 3 | 3 | 51.0 | 38BWD19 | 44 500 | 39 500 | ○ | 0.48 |
| | 70 | 38 | 19 | 4 | 3.5 | 55.2 | 38BWD21 | 44 500 | 39 500 | ○ | 0.57 |
| | 71 | 30 | 16.5 | 3.5 | 3.4 | 61.7 | 38BWD09A | 45 500 | 39 000 | — | 0.50 |
| | 71 | 39 | 19.5 | 3.5 | 3.4 | 65.9 | 38BWD22 | 42 000 | 37 500 | ○ | 0.62 |
| | 72 | 33 | 18 | 3.5 | 3.4 | 56.5 | 38BWD12 | 48 500 | 42 000 | — | 0.56 |
| | 72.041 | 34 | 17 | 2.5 | 2 | 55.9 | 38BWD04 | 47 500 | 41 000 | — | 0.55 |
| | 74 | 33 | 18 | 3.5 | 3.5 | 57.2 | 38BWD01A | 52 500 | 44 000 | — | 0.60 |
| | 74 | 50 | 25 | 4.5 | 3.6 | 57.2 | 38BWD06D | 52 500 | 44 000 | ○ | 0.82 |
| | 74 | 40 | 20 | 3.8 | 3.8 | 56.7 | 38BWD10B | 52 500 | 44 000 | ○ | 0.69 |
| | 74 | 33 | 18 | 4 | 3.5 | 57.2 | 38BWD15A | 52 500 | 44 000 | — | 0.61 |
| | 74 | 33 | 18 | 3.5 | 3.5 | 67.2 | 38BWD24 | 48 000 | 43 000 | — | 0.62 |
| | 76 | 43 | 21.5 | 4.8 | 3.8 | 71.9 | 38BWD23A | 48 000 | 43 500 | ○ | 0.82 |
| | 80 | 33 | 18 | 3.5 | 3.5 | 64.1 | 38BWD18 | 47 500 | 46 000 | — | 0.79 |
| 39 | 68 | 37 | 18.5 | 3.6 | 3.6 | 54.5 | 39BWD03 | 38 000 | 34 000 | ○ | 0.5 |
| | 72 | 37 | 18.5 | 3.3 | 2.4 | 53.9 | 39BWD01L | 47 500 | 41 000 | ○ | 0.60 |
| | 74 | 39 | 19.5 | 3.8 | 3.8 | 56.4 | 39BWD05 | 48 500 | 42 500 | ○ | 0.66 |
| 40 | 74 | 40 | 20 | 3.8 | 3.8 | 57.4 | 40BWD06D | 54 000 | 47 000 | ○ | 0.66 |
| | 74 | 42 | 21 | 3.5 | 3.5 | 70.1 | 40BWD12 | 48 000 | 43 000 | ○ | 0.71 |
| | 74 | 36 | 18 | 4.8 | 3.8 | 64.1 | 40BWD15A | 48 000 | 43 000 | ○ | 0.62 |
| | 74 | 34 | 18 | 2.6 | 2.6 | 58.8 | 40BWD16 | 50 500 | 45 500 | — | 0.59 |
| | 76 | 38 | 20.5 | 3 | 1.8 | 55.0 | 40BWD05 | 52 500 | 44 500 | ○ | 0.70 |
| | 76 | 33 | 16.5 | 3.6 | 3.6 | 54.3 | 40BWD08A | 51 500 | 48 000 | ○ | 0.61 |
| | 80 | 34 | 18 | 2.6 | 2.6 | 60.3 | 40BWD07A | 65 500 | 56 000 | — | 0.73 |
| | 80 | 34 | 18 | 3.5 | 3 | 57.8 | 40BWD14 | 47 500 | 46 000 | ○ | 0.77 |
| 42 | 76 | 33 | 16.5 | 3.6 | 3.6 | 54.3 | 42BWD12 | 46 000 | 43 000 | ○ | 0.65 |
| | 76 | 35 | 19 | 3.6 | 3.5 | 62.1 | 42BWD06 | 50 500 | 46 000 | — | 0.64 |
| | 78 | 38 | 19 | 3.5 | 2.5 | 57.0 | 42BWD09 | 55 000 | 48 500 | ○ | 0.72 |
| | 80 | 45 | 22.5 | 3.8 | 3.8 | 63.9 | 42BWD11 | 59 000 | 50 500 | ○ | 0.90 |
| | 80 | 34 | 18 | 3.5 | 3 | 57.8 | 42BWD13 | 47 500 | 46 000 | ○ | 0.76 |
| 43 | 76 | 43 | 21.5 | 4.8 | 3.8 | 71.9 | 43BWD12A | 48 000 | 43 500 | ○ | 0.71 |
| | 79 | 38 | 20.5 | 4 | 3 | 58.7 | 43BWD08 | 55 000 | 48 500 | ○ | 0.77 |
| | 79 | 45 | 22.5 | 4.8 | 3.1 | 76.4 | 43BWD13A | 49 500 | 47 000 | ○ | 0.87 |
| | 80 | 45 | 25 | 3.5 | 3 | 73.1 | 43BWD03 | 55 000 | 48 500 | — | 0.91 |
| | 82 | 45 | 22.5 | 3.5 | 3.4 | 65.5 | 43BWD06B | 62 000 | 54 500 | ○ | 0.94 |
| 45 | 83 | 45 | 22.5 | 3.8 | 3.8 | 66.8 | 45BWD06 | 57 500 | 52 500 | ○ | 0.95 |
| | 84 | 39 | 20.5 | 2.6 | 2.6 | 72.9 | 45BWD03 | 58 500 | 52 500 | ○ | 0.88 |
| | 84 | 40 | 21 | 4.5 | 3.5 | 62.8 | 45BWD07B | 69 000 | 61 000 | ○ | 0.89 |
| | 84 | 40 | 21 | 4.5 | 3.5 | 62.9 | 45BWD09 | 64 500 | 57 500 | ○ | 0.90 |
| | 84 | 45 | 22.5 | 3.5 | 3.35 | 76.8 | 45BWD10 | 58 500 | 52 500 | ○ | 0.98 |
| 46 | 79 | 45 | 22.5 | 4.8 | 3.1 | 76.4 | 46BWD01A | 49 500 | 47 000 | ○ | 0.79 |
| 48 | 89 | 42 | 22 | 4.5 | 3.5 | 67.2 | 48BWD01 | 69 000 | 62 000 | ○ | 0.9 |
| 49 | 84 | 50 | 25 | 3.5 | 2 | 87.1 | 49BWD02 | 46 000 | 47 000 | ○ | 1.00 |
| | 88 | 46 | 23 | 3.7 | 3.7 | 71.1 | 49BWD01B | 64 500 | 60 000 | ○ | 1.05 |

www.bergab.ru Берг АБ bergab@ya.ru Тел. (495)-228-06-21, факс (495) 223-3

www.bergab.ru Берг АБ bergab@ya.ru Тел. (495)-228-06-21, факс (495) 223-3071

## KWD type
## for driven/non-driven wheels

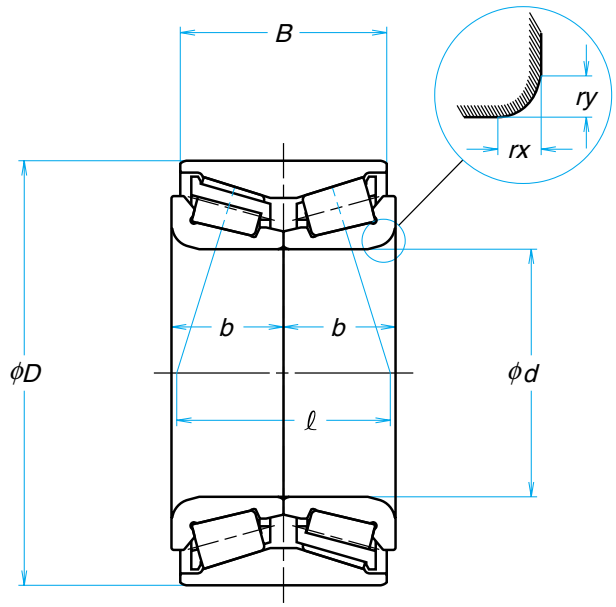


Standard type

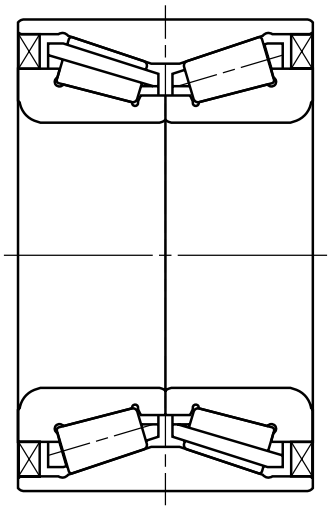

Seal integral type

| Boundary dimensions (mm) | | | | | | Distance between effective load centers ℓ (mm) | Bearing reference | Basic load ratings (N) Double row | | Seal integral type | Mass (kg) (approx.) |
|---|---|---|---|---|---|---|---|---|---|---|---|
| d | D | B | b | rx (Min.) | ry (Min.) | | | $C_r$ | $C_{or}$ | | |
| 27 | 52 | 43 | 21.5 | 3.3 | 3.3 | 36.9 | 27KWD02 | 53 000 | 73 500 | – | 0.41 |
| 30 | 58 | 42 | 21 | 3.3 | 3.3 | 31.8 | 30KWD01A | 62 000 | 89 000 | ○ | 0.50 |
| 34 | 67.8 | 43 | 21.5 | 5 | 3.6 | 37.4 | 34KWD03D | 89 500 | 120 000 | – | 0.73 |
| 35 | 60 | 32.4 | 16.2 | 2.5 | 2.5 | 27.6 | 35KWD02 | 60 000 | 93 500 | – | 0.38 |
| 37 | 74 | 45 | 22.5 | 2.4 | 2.4 | 36.9 | 37KWD01 | 89 000 | 123 000 | ○ | 0.84 |
| 38 | 64 | 37 | 18.5 | 3 | 3 | 31.2 | 38KWD01A | 60 500 | 88 000 | ○ | 0.46 |
| | 68 | 37 | 18.5 | 3 | 3 | 31.2 | 38KWD02 | 63 000 | 92 500 | – | 0.56 |
| | 76 | 43 | 21.5 | 5 | 4 | 38.1 | 38KWD04A | 92 500 | 138 000 | – | 0.94 |
| 38.993 | 72.011 | 37 | 18.5 | 3.3 | 2.4 | 32.5 | 39KWD02 | 68 500 | 92 500 | ○ | 0.63 |
| 42 | 72 | 38 | 19 | 4.75 | 3.6 | 36.3 | 42KWD02A | 76 500 | 108 000 | – | 0.58 |
| | 72 | 38 | 19 | 4.7 | 3.6 | 36.3 | 42KWD02D | 76 500 | 108 000 | – | 0.58 |
| | 80 | 38 | 19 | 3.5 | 3.5 | 32.8 | 42KWD08 | 95 000 | 128 000 | – | 0.82 |
| 43 | 76 | 43 | 21.5 | 3.6 | 3.5 | 38.3 | 43KWD02 | 94 000 | 138 000 | – | 0.82 |
| | 77 | 42 | 21 | 3.5 | 3.5 | 38.9 | 43KWD04 | 79 500 | 111 000 | – | 0.81 |
| 45 | 77 | 50 | 25 | 3.5 | 3.5 | 40.6 | 45KWD04 | 96 000 | 142 000 | – | 0.89 |
| | 78 | 40 | 20 | 3.5 | 3.5 | 37.3 | 45KWD03 | 91 000 | 130 000 | – | 0.73 |
| | 80 | 50 | 25 | 3.8 | 3.8 | 42.5 | 45KWD05 | 99 500 | 153 000 | ○ | 1.02 |
| 46 | 77 | 45 | 22.5 | 4.8 | 3.8 | 35.8 | 46KWD04 | 82 500 | 138 000 | – | 0.84 |
| | 78 | 49 | 24.5 | 5 | 4 | 35.8 | 46KWD03 | 82 500 | 138 000 | ○ | 0.97 |
| 47 | 82 | 57.5 | 28.75 | 3.5 | 3.5 | 57.5 | EP47KWD01 | 95 000 | 138 000 | ○ | 1.10 |


www.bergab.ru Берг АБ bergab@ya.ru Тел. (495)-228-06-21, факс (495) 223-3071

www.bergab.ru Берг АБ bergab@ya.ru Тел. (495)-228-06-21, факс (495) 223-3071


# HUB II Dimension Table

**BWK outer ring rotation type for non-driven wheels**

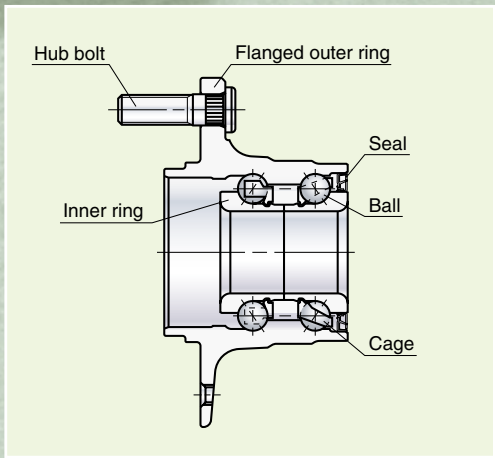


**BWK inner ring rotation type for non-driven wheels**

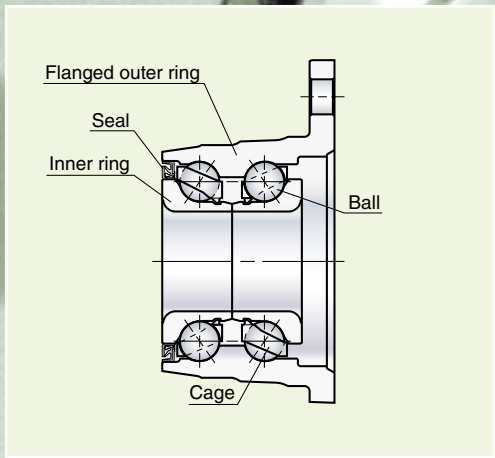


**BWK inner ring rotation type for driven wheels**

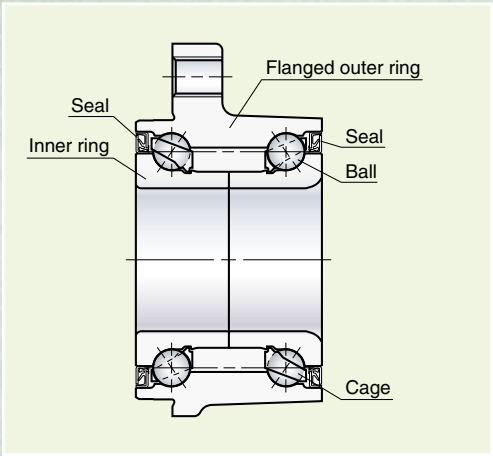


**KWH inner ring rotation type for driven/non-driven wheels**

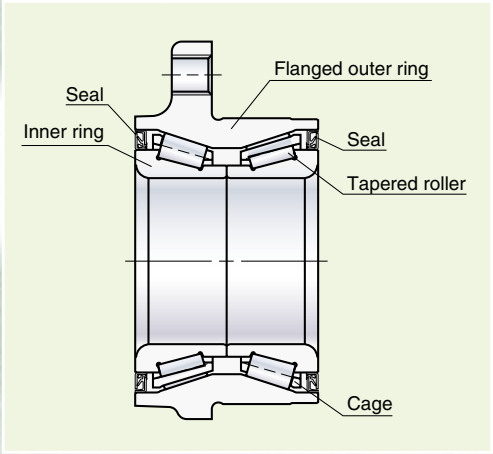


www.bergab.ru Берг АБ bergab@ya.ru Тел. (495)-228-06-21, факс (495) 223-3071

www.bergab.ru Берг АБ bergab@ya.ru Тел. (495)-228-06-21, факс (495) 223-3071

## BWK outer ring rotation type for non-driven wheels

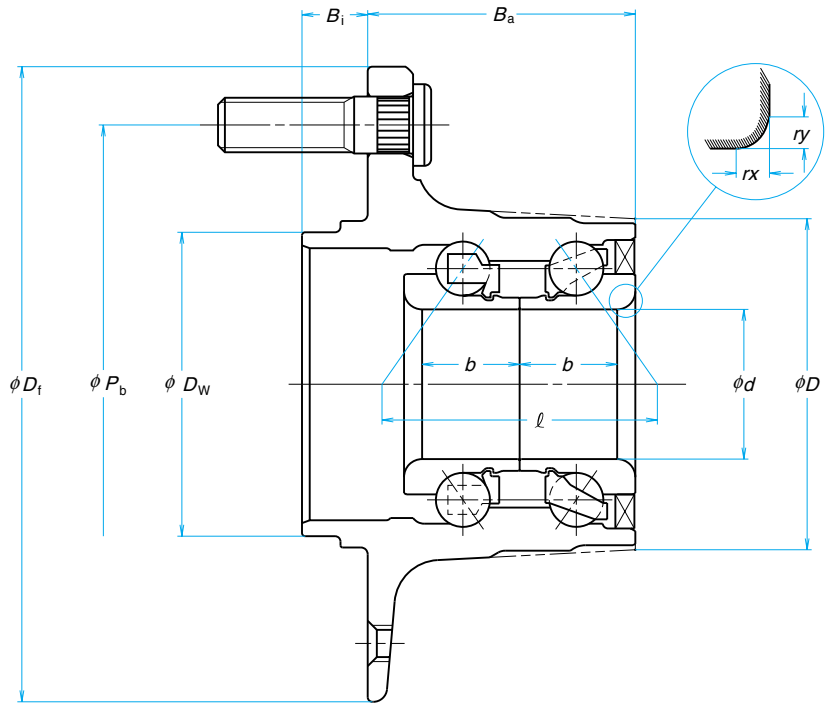


| Boundary dimensions (mm) | | | | | | | | | | Distance between effective load centers $\ell$ (mm) | Bearing reference | Basic load ratings (N) Double row | | No. of outer ring flange bolts | Mass (kg) (approx.) |
|---|---|---|---|---|---|---|---|---|---|---|---|---|---|---|---|
| $d$ | $D$ | $B_i$ | $b$ | $B_a$ | $D_f$ | $D_w$ | $P_b$ | $rx$ (Min.) | $ry$ (Min.) | | | $C_r$ | $C_{or}$ | | |
| 27 | 60 | 15 | 20 | 45 | 134 | 59 | 100 | 3.5 | 3.5 | 49.8 | 27BWK02A | 38 500 | 29 600 | 4 | 1.33 |
| | 63.2 | 15.5 | 27.5 | 57.5 | 148 | 66 | 114.3 | 4.5 | 3.6 | 61.8 | 27BWK03J | 41 500 | 30 500 | 4 | 1.9 |
| | 64.7 | 15 | 25 | 52.5 | 134 | 59 | 100 | 4.5 | 3.6 | 59.8 | 27BWK04D2a | 38 500 | 29 600 | 4 | 1.45 |
| | 65.4 | 15.5 | 25 | 52.5 | 148 | 66 | 114.3 | 4.5 | 3.6 | 59.8 | 27BWK06 | 38 500 | 29 600 | 4 | 1.9 |
| 28 | 63 | 14 | 24 | 56.5 | 125 | 56 | 100 | 4 | 3.3 | 56.8 | 28BWK08J | 41 500 | 30 500 | 4 | 1.75 |
| | 64 | 14 | 25.25 | 57 | 141 | 56 | 100 | 3.5 | 3.5 | 59.3 | 28BWK06D | 38 500 | 29 600 | 4 | 1.74 |
| | 64 | 6 | 20 | 49.5 | 120 | 60 | 100 | 3.5 | 2.5 | 49.8 | 28BWK15J | 38 500 | 29 600 | 4 | 1.38 |
| | 69 | 10.35 | 24 | 57.5 | 135 | 56.9 | 100 | 3.5 | 3.5 | 58.9 | 28BWK16 | 44 000 | 34 500 | 5 | 1.8 |
| 30 | 66.1 | 15.5 | 27.5 | 57.5 | 148 | 66 | 114.3 | 4.5 | 3.6 | 64.3 | 30BWK13A | 44 000 | 34 500 | 4 | 1.93 |
| | 67 | 11.5 | 20.5 | 55 | 136 | 56 | 100 | 3.5 | 2.5 | 51.2 | 30BWK02J | 41 500 | 31 000 | 4 | 1.8 |
| | 67 | 14 | 25 | 56.5 | 125 | 56 | 100 | 4 | 3.5 | 61.3 | 30BWK11 | 44 000 | 34 500 | 4 | 1.91 |
| | 73.8 | 15.5 | 24 | 49 | 148 | 66 | 114.3 | 4.5 | 3.6 | 59.7 | 30BWK18 | 55 000 | 40 000 | 4 | 1.98 |
| 33 | 73 | 14.5 | 25.5 | 59 | 140 | 67 | 114.3 | 4 | 4 | 60.7 | 33BWK02S | 50 000 | 39 500 | 5 | 2.17 |
| 41 | 86.5 | 17.5 | 20 | 37 | 170 | 105 | 139.7 | 3.6 | 3.6 | 71.0 | 41BWK03 | 52 000 | 46 500 | 5 | 2.69 |


www.bergab.ru Берг АБ bergab@ya.ru Тел. (495)-228-06-21, факс (495) 223-3071

www.bergab.ru Берг АБ bergab@ya.ru Тел. (495)-228-06-21, факс (495) 223-3071


## BWK inner ring rotation type for non-driven wheels

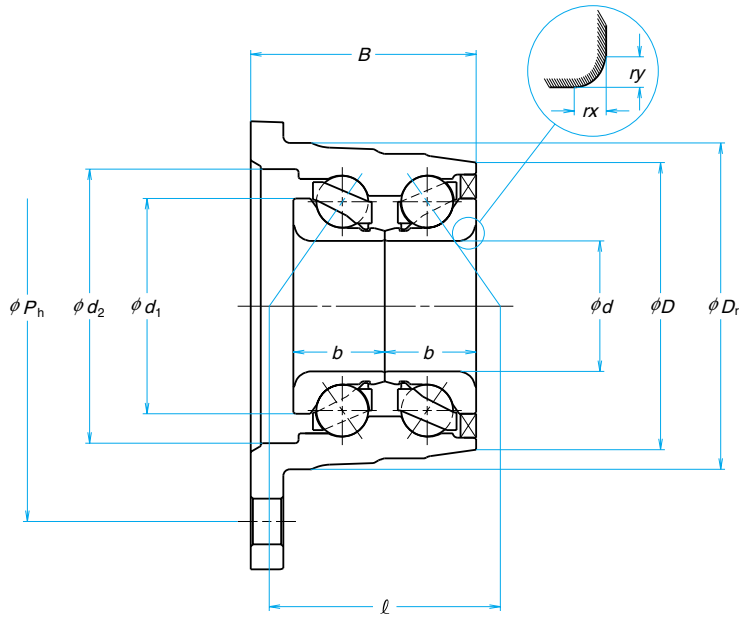


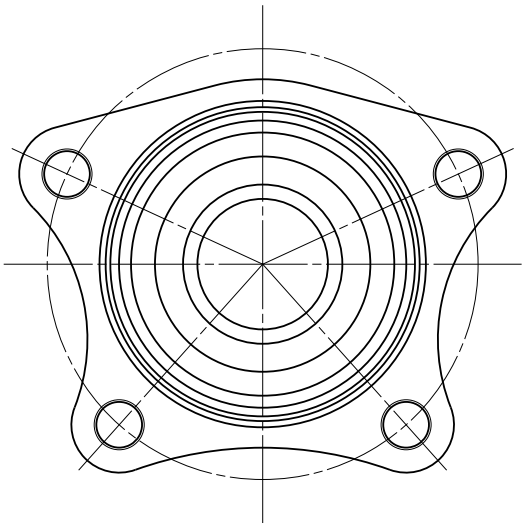

| Boundary dimensions (mm) | | | | | | | | | | Distance between effective load centers ℓ (mm) | Bearing reference | Basic load ratings (N) | | No. of outer ring flange bolts | Mass (kg) (approx.) |
|---|---|---|---|---|---|---|---|---|---|---|---|---|---|---|---|
| | | | | | | | | | | | | Double row | | | |
| d | B | b | D | $D_r$ | $d_1$ | $d_2$ | $P_h$ | rx (Min.) | ry (Min.) | | | $C_r$ | $C_{or}$ | | |
| 28 | 51.8 | 21 | 66 | 73 | 46.2 | 61 | 97 | 3.6 | 3.6 | 62.9 | 28BWK12 | 35 000 | 29 300 | 4 | 1.03 |
| 30 | 51.8 | 21 | 60.5 | 75 | 49.5 | 63 | 99 | 3.6 | 3.6 | 53.1 | EP30BWK16 | 47 000 | 35 500 | 4 | 1.06 |
| | 51.8 | 21 | 66 | 75 | 45.5 | 63 | 99 | 3.6 | 3.6 | 53.1 | 30BWK03B | 47 000 | 35 500 | 4 | 1.05 |
| | 51.8 | 21 | 66 | 75 | 49.5 | 63 | 99 | 3.6 | 3.6 | 63.7 | 30BWK17 | 38 500 | 31 500 | 4 | 1.15 |
| | 51.8 | 21 | 67 | 75 | 45.5 | 63 | 99 | 3.6 | 3.6 | 54.3 | 30BWK10 | 40 500 | 33 000 | 4 | 1.01 |
| | 46.3 | 21 | 67 | 80 | 49.5 | 71 | 106 | 3.6 | 3.6 | 53.1 | EP30BWK14 | 47 000 | 35 500 | 4 | 1.35 |

www.bergab.ru Берг АБ bergab@ya.ru Тел. (495)-228-06-21, факс (495) 223-3071

www.bergab.ru Берг АБ bergab@ya.ru Тел. (495)-228-06-21, факс (495) 223-3071

## BWK inner ring rotation type for driven wheels

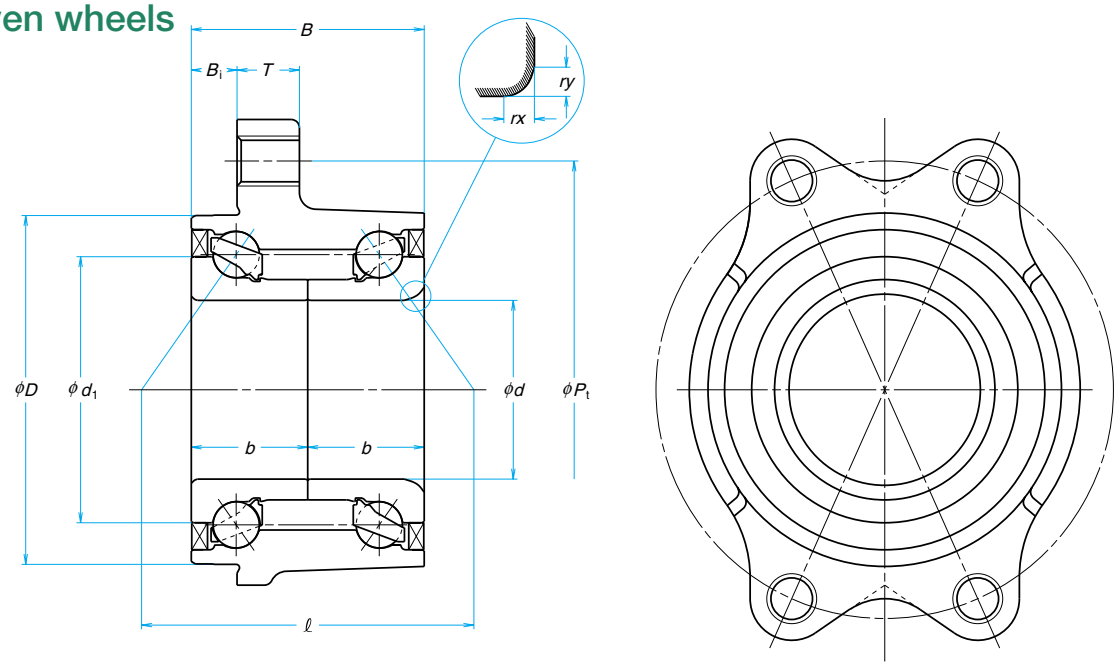


| Boundary dimensions (mm) | | | | | | | | | | Distance between effective load centers ℓ (mm) | Bearing reference | Basic load ratings (N) Double row | | No. of outer ring flange bolts | Mass (kg) (approx.) |
|---|---|---|---|---|---|---|---|---|---|---|---|---|---|---|---|
| d | D | B | b | $d_1$ | T | $B_i$ | $P_t$ | rx (Min.) | ry (Min.) | | | $C_r$ | $C_{or}$ | | |
| 38 | 87.4 | 54.8 | 18 | 55.2 | 10 | 3.2 | 106 | 3.5 | 3.5 | 57.3 | 38BWK01J | 59 000 | 49 500 | 4 | 1.25 |
| 43 | 83 | 42.5 | 22 | 58.6 | 14 | 16.5 | 102 | 5 | 3.5 | 58.7 | 43BWK03D | 55 000 | 48 500 | 4 | 1.22 |
| | 83 | 47.5 | 24.5 | 58.6 | 14 | 21.5 | 102 | 5 | 3.5 | 63.7 | 43BWK04 | 55 000 | 48 500 | 4 | 1.32 |
| | 84 | 56 | 28 | 64 | 15 | 11 | — | 4.8 | 3.1 | 79.9 | 43BWK07 | 52 500 | 50 000 | 4 | 1.67 |

## KWH inner ring rotation type for driven/ non-driven wheels

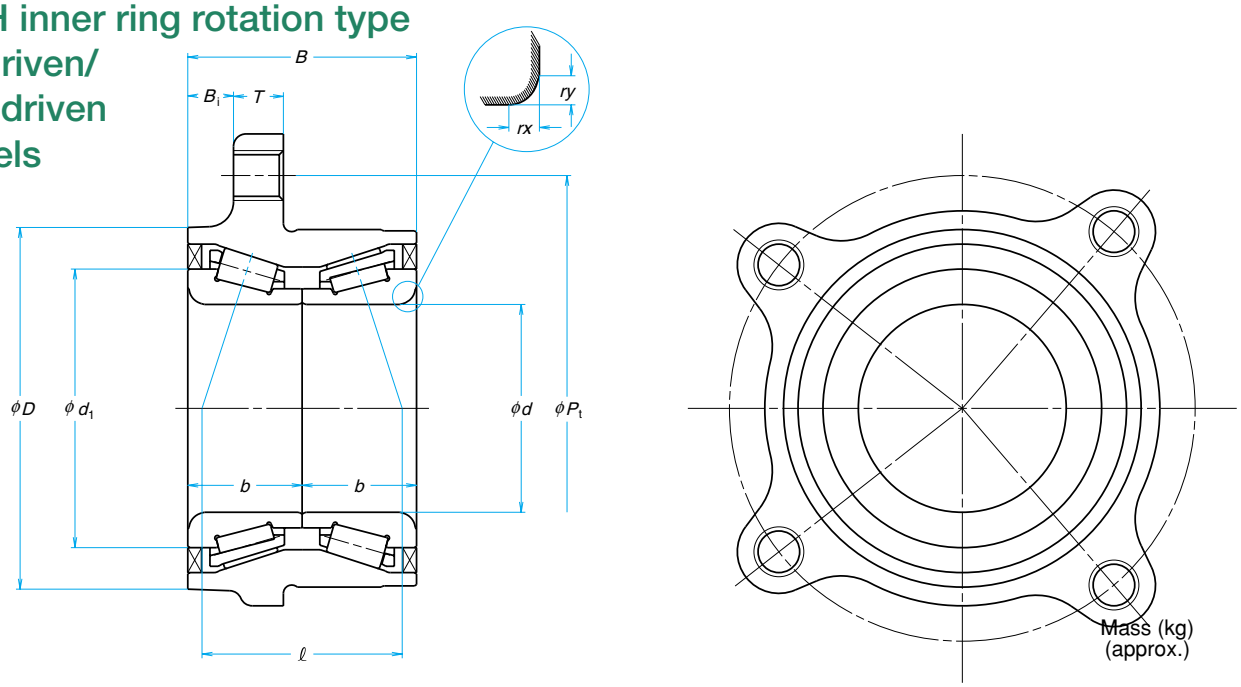


| Boundary dimensions (mm) | | | | | | | | | | Distance between effective load centers ℓ (mm) | Bearing reference | Basic load ratings (N) Double row | | No. of outer ring flange bolts | Mass (kg) (approx.) |
|---|---|---|---|---|---|---|---|---|---|---|---|---|---|---|---|
| d | D | B | b | $d_1$ | T | $B_i$ | $P_t$ | rx (Min.) | ry (Min.) | | | $C_r$ | $C_{or}$ | | |
| 50 | 86 | 55 | 27.5 | 67 | 12 | 32 | 112 | 5.5 | 5.5 | 49.2 | NTF50KWH01B | 98 000 | 157 000 | 4 | 1.488 |
| 51 | 87 | 55 | 27.5 | 68.4 | 15.5 | 19.5 | 112 | 5 | 5 | 50.0 | 51KWH01A | 101 000 | 164 000 | 4 | 1.533 |


www.bergab.ru Берг АБ bergab@ya.ru Тел. (495)-228-06-21, факс (495) 223-3071

www.bergab.ru Берг АБ bergab@ya.ru Тел. (495)-228-06-21, факс (495) 223-3071


# HUB III Dimension Table

**BWKH inner ring rotation type for non-driven wheels**

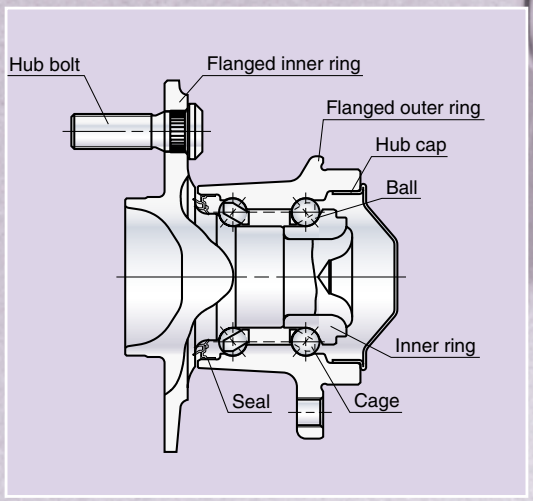


**BWKH inner ring rotation type for driven wheels**

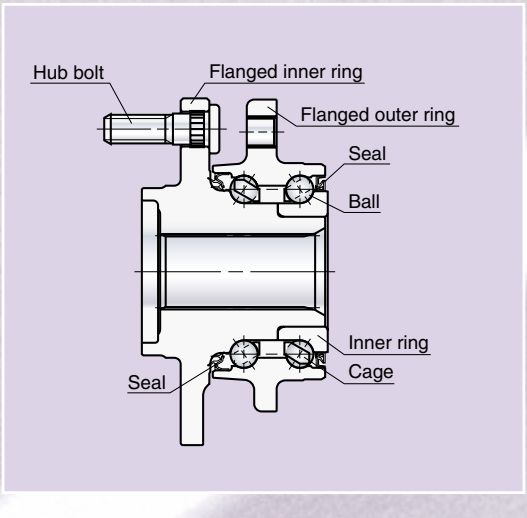


www.bergab.ru Берг АБ bergab@ya.ru Тел. (495)-228-06-21, факс (495) 223-3

www.bergab.ru Берг АБ bergab@ya.ru Тел. (495)-228-06-21, факс (495) 223-3071

## BWKH inner ring rotation type for non-driven wheels

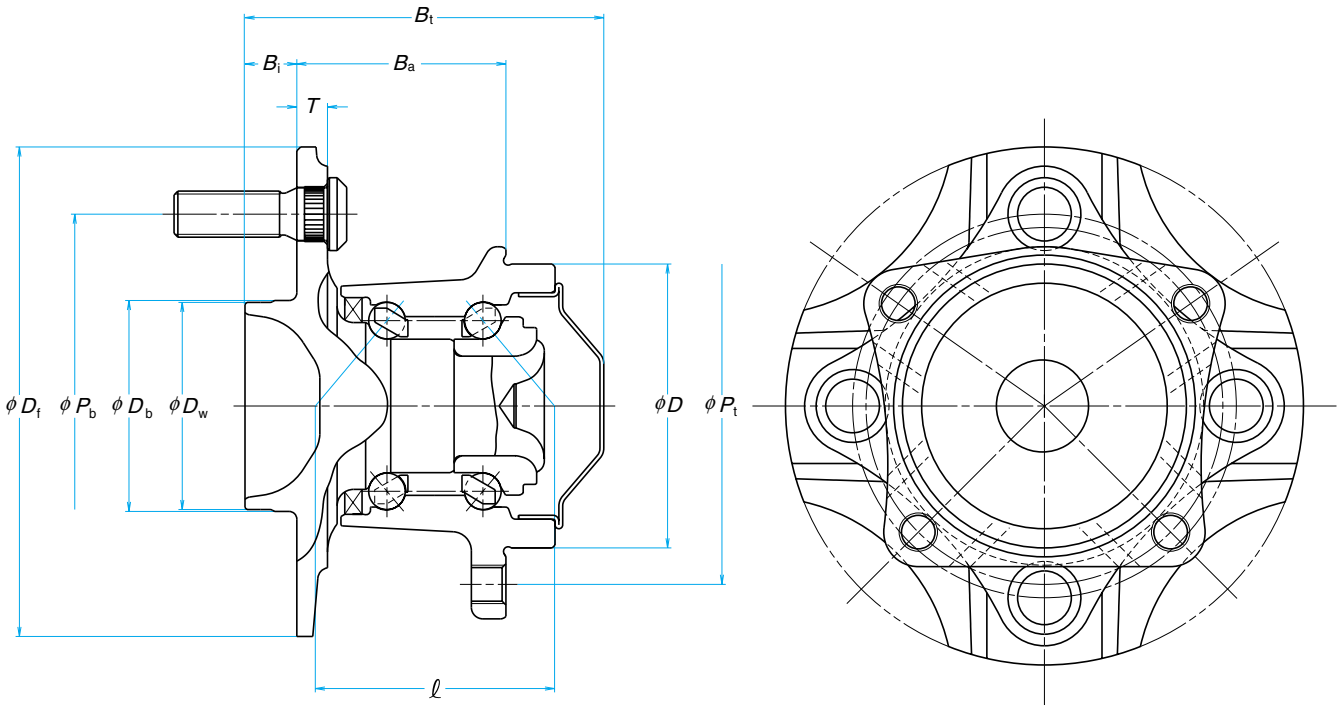


| Boundary dimensions (mm) | | | | | | | | | | Distance between effective load centers $\ell$ (mm) | Bearing reference | Basic load ratings (N) | | No. of flanged inner ring hub bolts | No. of outer ring flange tapped holes | Mass (kg) (approx.) | ABS Sensor integral type |
|---|---|---|---|---|---|---|---|---|---|---|---|---|---|---|---|---|---|
| | | | | | | | | | | | | Double row | | | | | |
| $D_w$ | $D$ | $D_b$ | $B_a$ | $T$ | $B_i$ | $B_t$ | $P_b$ | $P_t$ | $D_f$ | | | $C_r$ | $C_{or}$ | | | | |
| 54 | 67 | 55 | 54.5 | 8 | 13.5 | 93.5 | 100 | 92 | 135 | 62.3 | 44BWKH09 | 3 500 | 26 800 | 4 | 4 | 2.3 | ○ |
| 54 | 74 | 55 | 54.5 | 8 | 13.5 | 93.5 | 100 | 93 | 135 | 62.3 | 44BWKH10B | 33 500 | 26 800 | 4 | 4 | 2.34 | ○ |
| 54 | 74 | 55 | 54.5 | 10 | 13.5 | 93.3 | 100 | 93 | 135 | 66.1 | 49BWKH04A | 50 500 | 38 000 | 5 | 4 | 2.96 | ○ |
| 56.8 | 86 | 57.3 | 48 | 9 | 14.5 | 100.8 | 100 | – | 126 | 57.4 | 52BWKH01 | 61 000 | 44 500 | 5 | 4 | 3.4 | – |
| 60 | 74 | 62 | 74.5 | 11 | 13.5 | 100.8 | 114.3 | 99 | 152 | 66.1 | 49BWKH17 | 50 500 | 38 000 | 5 | 4 | 3.68 | ○ |
| 60 | 84 | 62 | 69 | 10 | 13.5 | 108.3 | 114.3 | 106 | 152 | 77.6 | 49BWKH11 | 50 500 | 38 000 | 5 | 4 | 3.94 | ○ |
| 69.5 | 76 | 71.5 | 43 | 10.4 | 25 | 86.1 | 120 | 108 | 140 | 63.0 | 55BWKH01 | 50 000 | 41 500 | 5 | 3 | 3.8 | ○ |
| 71.4 | 86 | 71.9 | 48 | 9 | 14.5 | 100.8 | 114.3 | – | 140 | 57.5 | 53BWKH01 | 66 500 | 49 000 | 5 | 4 | 3.6 | – |


www.bergab.ru Берг АБ bergab@ya.ru Тел. (495)-228-06-21, факс (495) 223-3071

www.bergab.ru Берг АБ bergab@ya.ru Тел. (495)-228-06-21, факс (495) 223-3071


## BWKH inner ring rotation type for driven wheels

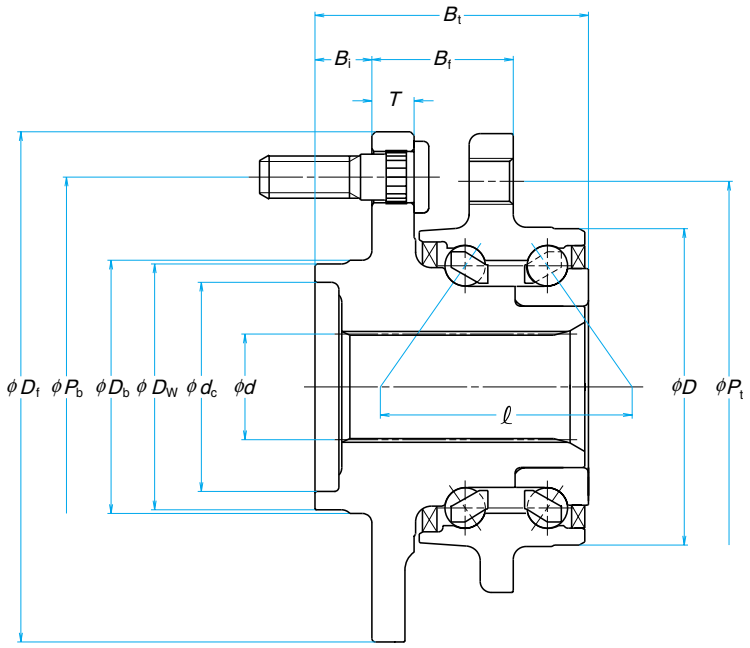


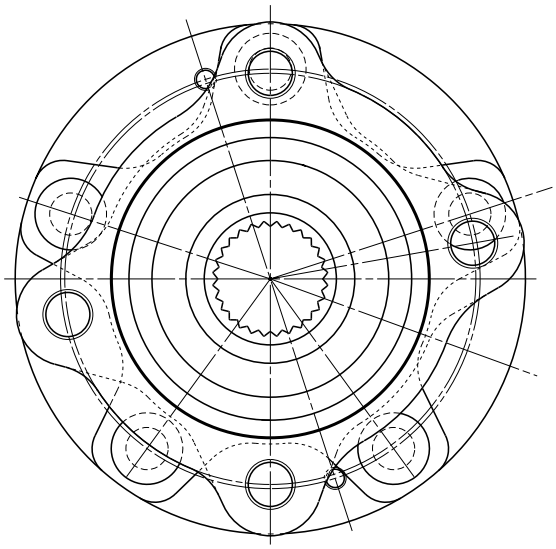

| Boundary dimensions (mm) | | | | | | | | | | | | Distance between effective load centers $\ell$ (mm) | Bearing reference | Basic load ratings (N) | | No. of flanged inner ring hub bolts | No. of outer ring flange tapped holes | Mass (kg) (approx.) |
|---|---|---|---|---|---|---|---|---|---|---|---|---|---|---|---|---|---|---|
| | | | | | | | | | | | | | | Double row | | | | |
| $d$ *1 | $D$ | $B_t$ | $B_f$ | $d_c$ | $D_w$ | $D_b$ | $T$ | $B_i$ | $P_b$ | $P_t$ | $D_f$ | | | $C_r$ | $C_{or}$ | | | |
| 26 | 74 | 81.5 | 54.5 | 45 | 54 | 55 | 10 | 13.5 | 100 | 93 | 135 | 80.6 | 55BWKH02A | 42 000 | 37 500 | 4 | 4 | 2.7 |
| 26 | 84 | 98.5 | 69 | 51 | 60 | 62 | 10 | 13.5 | 114.3 | 106 | 152 | 81.7 | 58BWKH03 | 48 000 | 43 500 | 5 | 4 | 3.32 |
| 27 | 87 | 74.5 | 38.5 | 57 | 67 | 69 | 11.5 | 15.5 | 114.3 | 112 | 139 | 68.6 | 66BWKH02A | 53 500 | 52 000 | 5 | 4 | 3.58 |
| 31.75 | 84 | 102.5 | 67.5 | 50 | 60 | 62 | 11 | 14 | 114.3 | 112 | 154 | 98.6 | 64BWKH02A | 46 500 | 46 500 | 5 | 4 | 3.84 |

*1: Pitch circle diameter of spline

www.bergab.ru Берг АБ bergab@ya.ru Тел. (495)-228-06-21, факс (495) 223-3071

www.bergab.ru Берг АБ bergab@ya.ru Тел. (495)-228-06-21, факс (495) 223-3071

# Appendix Table

Table 1 Tolerances for shaft diameters

| Diameter classification (mm) | | Single plane mean bore diameter deviation (class normal) | e7 | e8 | e9 | f6 | f7 | f8 | g5 | g6 | h5 |
|---|---|---|---|---|---|---|---|---|---|---|---|
| Over | Incl. | | | | | | | | | | |
| 10 | 18 | 0 | –32 | – 32 | – 32 | –16 | –16 | –16 | – 6 | – 6 | 0 |
| | | – 8 | –50 | – 59 | – 75 | –27 | –34 | –43 | –14 | –17 | – 8 |
| 18 | 30 | 0 | –40 | – 40 | – 40 | –20 | –20 | –20 | – 7 | – 7 | 0 |
| | | –10 | –61 | – 73 | – 92 | –33 | –41 | –53 | –16 | –20 | – 9 |
| 30 | 50 | 0 | –50 | – 50 | – 50 | –25 | –25 | –25 | – 9 | – 9 | 0 |
| | | –12 | –75 | – 89 | –112 | –41 | –50 | –64 | –20 | –25 | –11 |
| 50 | 65 | 0 | –60 | – 60 | – 60 | –30 | –30 | –30 | –10 | –10 | 0 |
| 65 | 80 | –15 | –90 | –106 | –134 | –49 | –60 | –76 | –23 | –29 | –13 |

Table 2 Tolerances for housing bore diameters

| Diameter classification (mm) | | Single plane mean outside diameter deviation (class normal) | F6 | F7 | F8 | G6 | G7 | H6 | H7 | H8 | JS6 |
|---|---|---|---|---|---|---|---|---|---|---|---|
| Over | Incl. | | | | | | | | | | |
| 18 | 24 | 0 | +33 | +41 | +53 | +20 | +28 | +13 | +21 | +33 | ±6.5 |
| 24 | 30 | – 9 | +20 | +20 | +20 | + 7 | + 7 | 0 | 0 | 0 | |
| 30 | 40 | 0 | +41 | +50 | +64 | +25 | +34 | +16 | +25 | +39 | ± 8 |
| 40 | 50 | –11 | +25 | +25 | +25 | + 9 | + 9 | 0 | 0 | 0 | |
| 50 | 65 | 0 | +49 | +60 | +76 | +29 | +40 | +19 | +30 | +46 | ±9.5 |
| 65 | 80 | –13 | +30 | +30 | +30 | +10 | +10 | 0 | 0 | 0 | |
| 80 | 100 | 0 | +58 | +71 | +90 | +34 | +47 | +22 | +35 | +54 | ±11 |
| 100 | 120 | –15 | +36 | +36 | +36 | +12 | +12 | 0 | 0 | 0 | |


www.bergab.ru Берг АБ bergab@ya.ru Тел. (495)-228-06-21, факс (495) 223-3071

www.bergab.ru Берг АБ bergab@ya.ru Тел. (495)-228-06-21, факс (495) 223-3071


Unit : $\mu$m

| h6 | h7 | h8 | h9 | js5 | js6 | js7 | k5 | k6 | m5 | m6 | n6 | p6 | r6 |
|---|---|---|---|---|---|---|---|---|---|---|---|---|---|
| 0 | 0 | 0 | 0 | ±4 | ±5.5 | ± 9 | + 9 | +12 | +15 | +18 | +23 | +29 | +34 |
| –11 | –18 | –27 | –43 | | | | + 1 | + 1 | + 7 | + 7 | +12 | +18 | +23 |
| 0 | 0 | 0 | 0 | ±4.5 | ±6.5 | ±10.5 | +11 | +15 | +17 | +21 | +28 | +35 | +41 |
| –13 | –21 | –33 | –52 | | | | + 2 | + 2 | + 8 | + 8 | +15 | +22 | +28 |
| 0 | 0 | 0 | 0 | ±5.5 | ±8 | ±12.5 | +13 | +18 | +20 | +25 | +33 | +42 | +50 |
| –16 | –25 | –39 | –62 | | | | + 2 | + 2 | + 9 | + 9 | +17 | +26 | +34 |
| 0 | 0 | 0 | 0 | ±6.5 | ±9.5 | ±15 | +15 | +21 | +24 | +30 | +39 | +51 | +60<br>+41 |
| –19 | –30 | –46 | –74 | | | | + 2 | + 2 | +11 | +11 | +20 | +32 | +62<br>+43 |

Unit : $\mu$m

| JS7 | K6 | K7 | M6 | M7 | N6 | N7 | P6 | P7 | R7 | S7 | T7 | U7 |
|---|---|---|---|---|---|---|---|---|---|---|---|---|
| ±10.5 | + 2 | + 6 | – 4 | 0 | –11 | – 7 | –18 | –14 | –20 | – 27 | – | – 33<br>– 54 |
| | –11 | –15 | –17 | –21 | –24 | –28 | –31 | –35 | –41 | – 48 | – 33<br>– 54 | – 40<br>– 61 |
| ±12.5 | + 3 | + 7 | – 4 | 0 | –12 | – 8 | –21 | –17 | –25 | – 34 | – 39<br>– 64 | – 51<br>– 76 |
| | –13 | –18 | –20 | –25 | –28 | –33 | –37 | –42 | –50 | – 59 | – 45<br>– 70 | – 61<br>– 86 |
| ±15 | + 4 | + 9 | – 5 | 0 | –14 | – 9 | –26 | –21 | –30<br>–60 | – 42<br>– 72 | – 55<br>– 85 | – 76<br>–106 |
| | –15 | –21 | –24 | –30 | –33 | –39 | –45 | –51 | –32<br>–62 | – 48<br>– 78 | – 64<br>– 94 | – 91<br>–121 |
| ±17.5 | + 4 | +10 | – 6 | 0 | –16 | –10 | –30 | –24 | –38<br>–73 | – 58<br>– 93 | – 78<br>–113 | –111<br>–146 |
| | –18 | –25 | –28 | –35 | –38 | –45 | –52 | –59 | –41<br>–76 | – 66<br>–101 | – 91<br>–126 | –131<br>–166 |

www.bergab.ru Берг АБ bergab@ya.ru Тел. (495)-228-06-21, факс (495) 223-3