www.bergab.ru Берг АБ bergab@ya.ru Тел. (495)-228-06-21, факс (495) 223-3071

HepcoMotion®

SBD
Sealed Belt Drive

HEPCO®
www.HepcoMotion.com

www.bergab.ru Берг АБ bergab@ya.ru Тел. (495)-228-06-21, факс (495) 223-3071

www.bergab.ru Берг АБ bergab@ya.ru Тел. (495)-228-06-21, факс (495) 223-3071

Introduction

The HepcoMotion SBD is an exceptionally rugged, quiet and precise linear unit. It uses super-smooth Hepco LBG caged linear ball guides having such high load capacity that system life is rarely an issue. Drive is provided by a new high strength tooth belt. The unit is housed in an anodised aluminium beam and is completely enclosed with a stainless steel cover to provide excellent protection from dirt and debris. A corrosion resistant version with all external components made in stainless steel or anodised aluminium is an option. A version for use in high specification cleanrooms is also available 🕮 5-6.

Stainless Steel Cover
- Helps protect internal mechanism from ingress of debris
- Effective in any orientation
- Enhances safety and appearance

Removable Carriage Plate
- Easily detachable for customising
- Can be rotated 180° to change handing of switch cam

Mounting Platform
- Tapped holes for ease of component attachment
- Direct fixing of mutli-axis mounting brackets

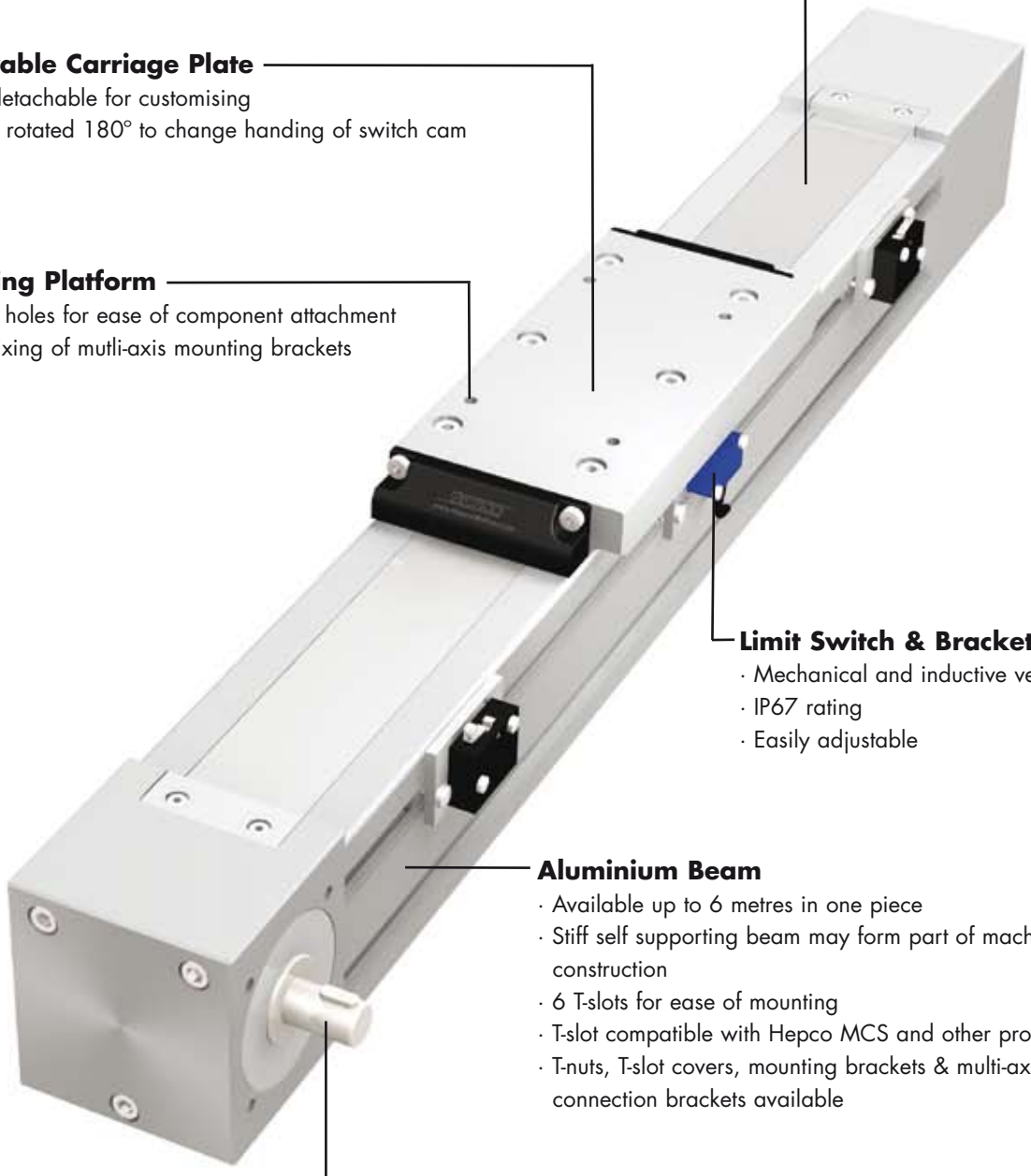

Limit Switch & Bracket
- Mechanical and inductive versions
- IP67 rating
- Easily adjustable

Aluminium Beam
- Available up to 6 metres in one piece
- Stiff self supporting beam may form part of machine construction
- 6 T-slots for ease of mounting
- T-slot compatible with Hepco MCS and other profiles
- T-nuts, T-slot covers, mounting brackets & multi-axis connection brackets available

Drive Shaft
- Supplied with fitted key
- Right, left, double & hollow shaft options (right hand shown)
- Motor connection kits available

www.bergab.ru Берг АБ bergab@ya.ru Тел. (495)-228-06-21, факс (495) 223-3071

www.bergab.ru Берг АБ bergab@ya.ru Тел. (495)-228-06-21, факс (495) 223-3071

System Composition

SBD units are available in lengths up to 6m in one piece and unlimited lengths can be achieved with joined beams. Units are factory adjusted and lubricated. Re-lubrication of the linear ball guide is easily achieved via an access hole in the beam. SBD units are suitable for single or multi-axis applications and can be supplied with a wide range of gearboxes, motors and drives. The beam profiles and T-slots are compatible with Hepco's MCS frame building system and its extensive range of accessories, allowing complete machines to be built.

Drive End
- Compact modular design
- Integrated drive pulley and input shaft
- Pre-tapped holes for ease of customer motor mounting
- Comprehensive range of gearboxes & motors available

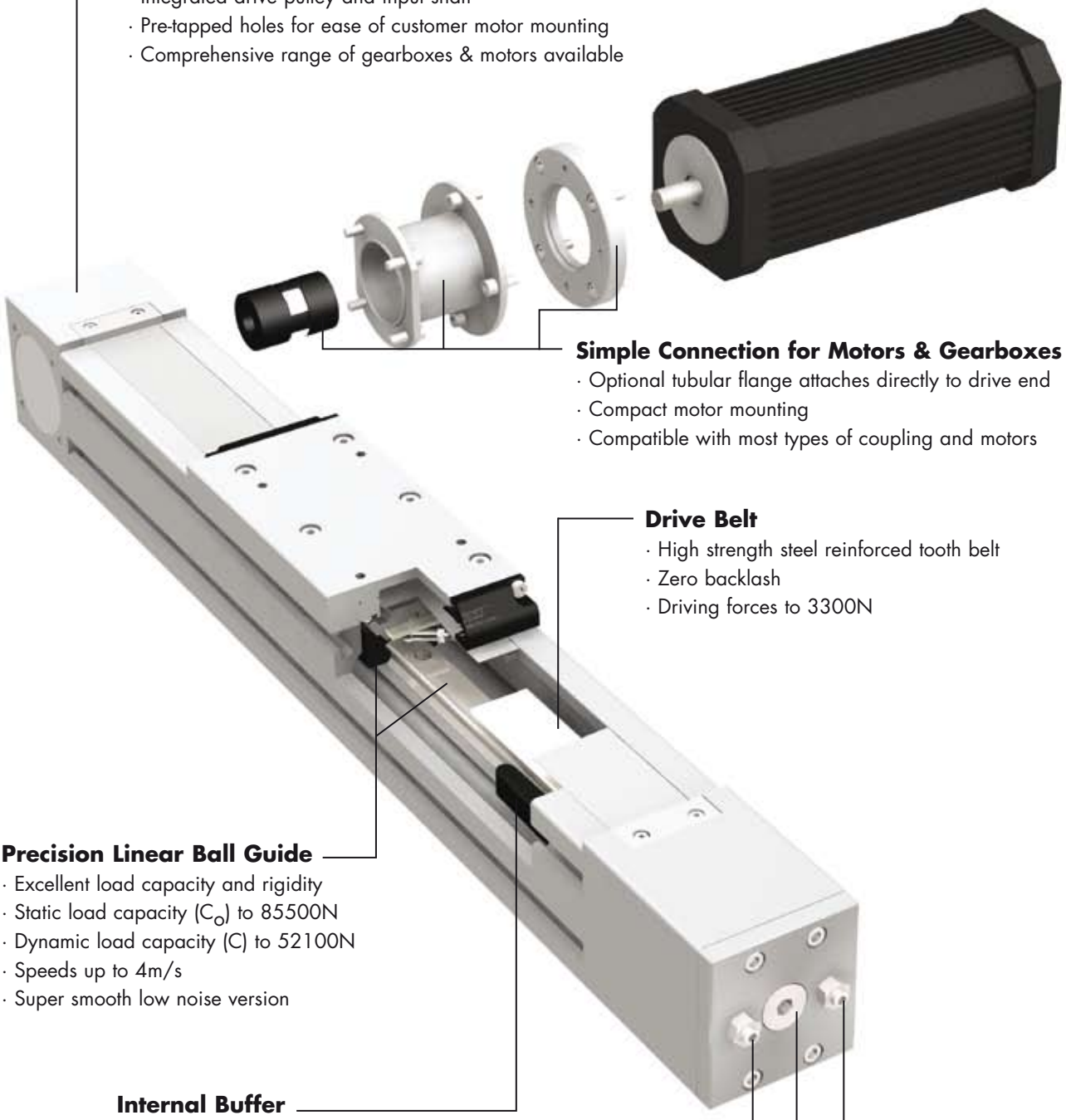

Simple Connection for Motors & Gearboxes
- Optional tubular flange attaches directly to drive end
- Compact motor mounting
- Compatible with most types of coupling and motors

Drive Belt
- High strength steel reinforced tooth belt
- Zero backlash
- Driving forces to 3300N

Precision Linear Ball Guide
- Excellent load capacity and rigidity
- Static load capacity (C_o) to 85500N
- Dynamic load capacity (C) to 52100N
- Speeds up to 4m/s
- Super smooth low noise version

Internal Buffer
- End of stroke protection at both ends

Simple Belt Adjustment
- Quick & easy to adjust
- Externally accessible

www.bergab.ru Берг АБ bergab@ya.ru Тел. (495)-228-06-21, факс (495) 223-3071

www.bergab.ru Берг АБ bergab@ya.ru Тел. (495)-228-06-21, факс (495) 223-3071

Data & Dimensions

The main dimensions of the SBD unit are shown below. Further details can be obtained from the 3D CAD files available from Hepco's technical department or at www.HepcoMotion.com. Units are supplied in increments of 60mm (SBD20-80) and 80mm (SBD30-100) up to 6000mm in one piece 📖10. Longer units are made from more than one piece. The nominal stroke length is calculated with the carriage against the internal buffers. In practice a clearance should be provided to allow for overrun.

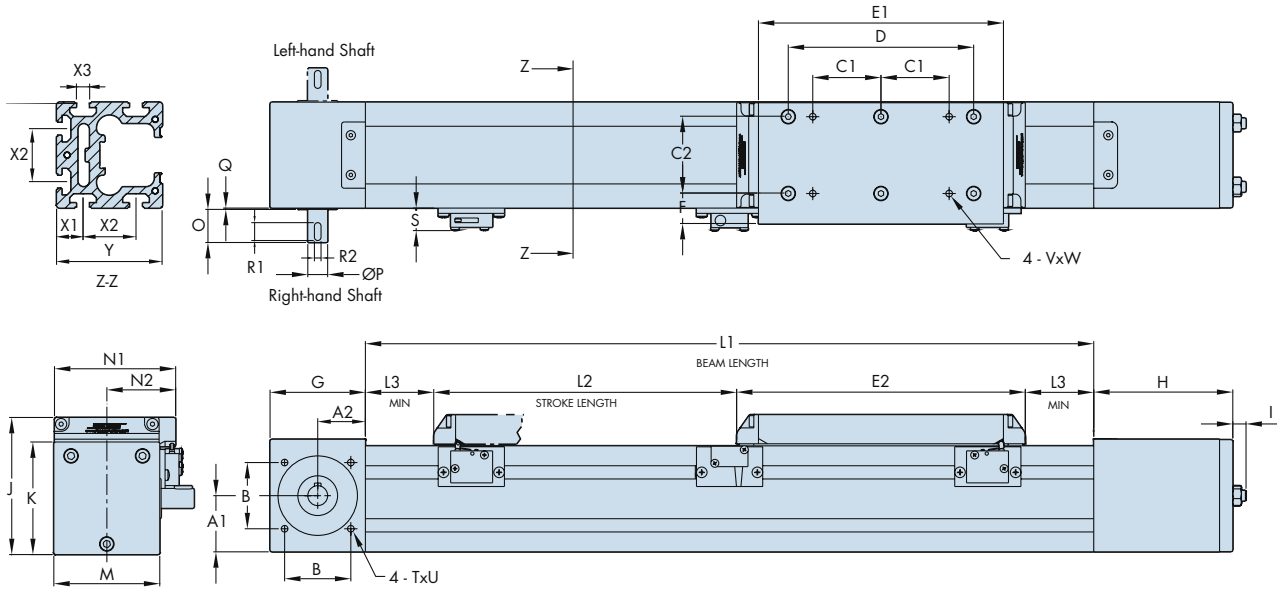

SBD Unit	A1	A2	B	C1	C2	D	E1	E2	F	G	H	I	J	K	L1 (min)	L2 Nominal Stroke	L3 (min)
SBD20-80	42.4	36	50	51.5	58	140	185	218	23	72	105	12	103.5	85	550	L1 - 300	41
SBD30-100	51.6	48	65	65	76	180	235	268	24.5	96	145.5	13	123.5	105	580	L1 - 365	48.5

SBD Unit	M	N1	N2	O	P	Q	R1	R2	S	TxU	VxW	X1	X2	X3	Y
SBD20-80	80	91.5	52	25	15	1	13.5	5	17	M6 x 15	M6 x 9.5	20	40	10	80
SBD30-100	100	112	62.5	36	20	1	22	6	17	M6 x 15	M8 x 9.5	30	40	10	100

All dimensions in mm

Re-lubrication of the ball guide carriage block is via an access point in the side of the beam (see below), which is closed off with a threaded plug. The lubrication interval depends on length of stroke, speed and duty. Contact Hepco's technical department for further details.

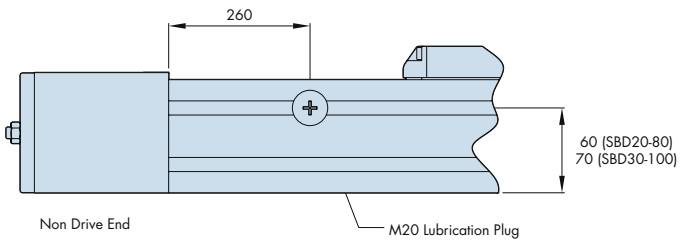

www.bergab.ru Берг АБ bergab@ya.ru Тел. (495)-228-06-21, факс (495) 223-3071

www.bergab.ru Берг АБ bergab@ya.ru Тел. (495)-228-06-21, факс (495) 223-3071

Drive Connections

The HepcoMotion SBD can be supplied with a fitted motor or gearbox to suit many different applications. Connection to other motors and gearboxes is quick and simple using one of the fixing kits. Standard kits to suit a range of servo motor frame sizes 036, 056 & 071 are stock items. Hepco can offer a fast service on special connection kits for attachment of customer's motors and gearboxes. Hepco can supply AC motors, stepper and servo systems including braked motors, encoders and inverter drives for power and control. Please contact Hepco for full details and application advice. A typical servo motor arrangement is shown in the illustration below.

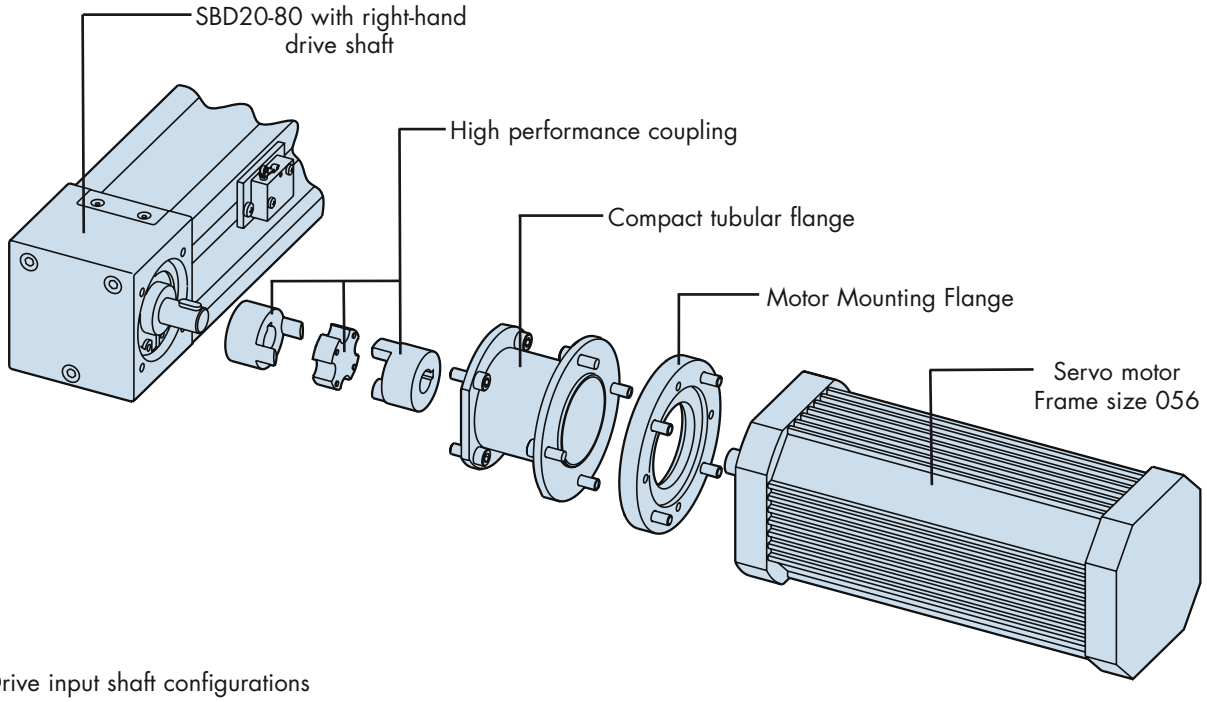

Drive input shaft configurations

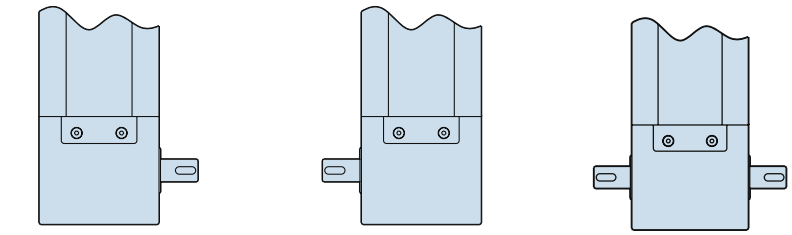

The hollow shafted arrangement may offer a more compact and lower cost means of retro-fitting a motor and/or gearbox onto an SBD. For further details of motor connections please visit www.HepcoMotion.com/sbddatauk and select datasheet No. 1 SBD motor connections.

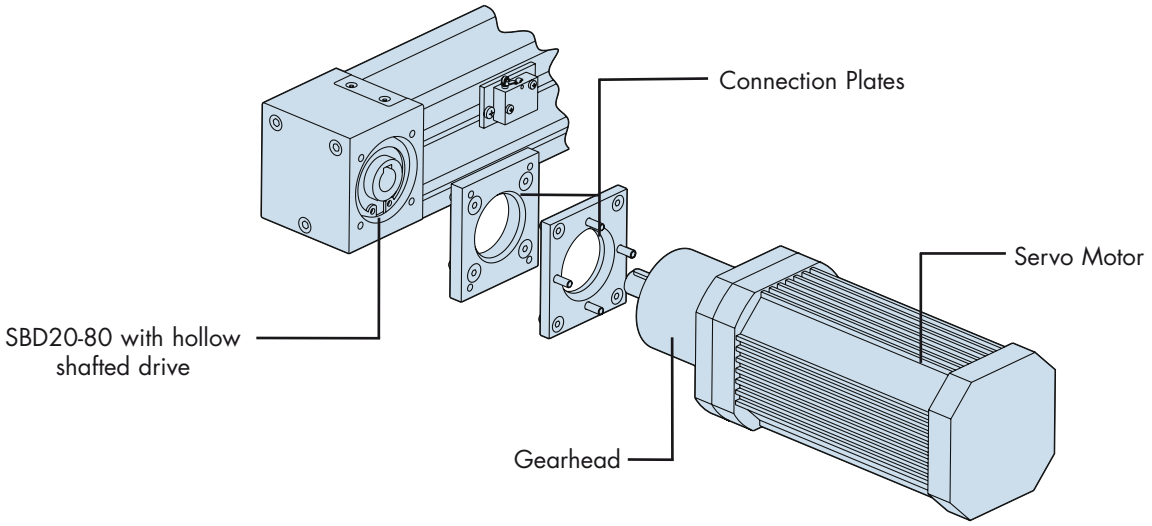

www.bergab.ru Берг АБ bergab@ya.ru Тел. (495)-228-06-21, факс (495) 223-3071

www.bergab.ru Берг АБ bergab@ya.ru Тел. (495)-228-06-21, факс (495) 223-3071

Cleanroom Version

The cleanroom version of the SBD unit has been designed to meet an increasing demand for clean manufacturing processes and environments. This version of the SBD unit is ready for connection to vacuum extraction which minimises particle emissions. All external parts are made from anodised aluminium or stainless steel. This SBD cleanroom unit is certified by the Fraunhofer IPA Institute for use in cleanroon environments and meets air cleanliness class 3 according to ISO 14644-1. For further details please visit www.HepcoMotion.com/sbddatauk and select datasheet No. 5 cleanroom qualification.

IPA Fraunhofer TESTED® DEVICE
HepcoMotion SBD30-100 linear drive unit Report No. HE 0607-357

Drive Shaft
· Stainless steel shaft with fitted key
· Right, left, double and hollow shaft options
· Motor connection kits available

Stainless Steel Cover
· Effective in any orientation
· Enhances safety and appearance

Removable Carriage Plate
· Easily detachable for customising
· Can be rotated 180° to change handing of switch cam

Mounting Platform
· Tapped holes for ease of component attachment
· Direct fixing of mutli-axis mounting brackets

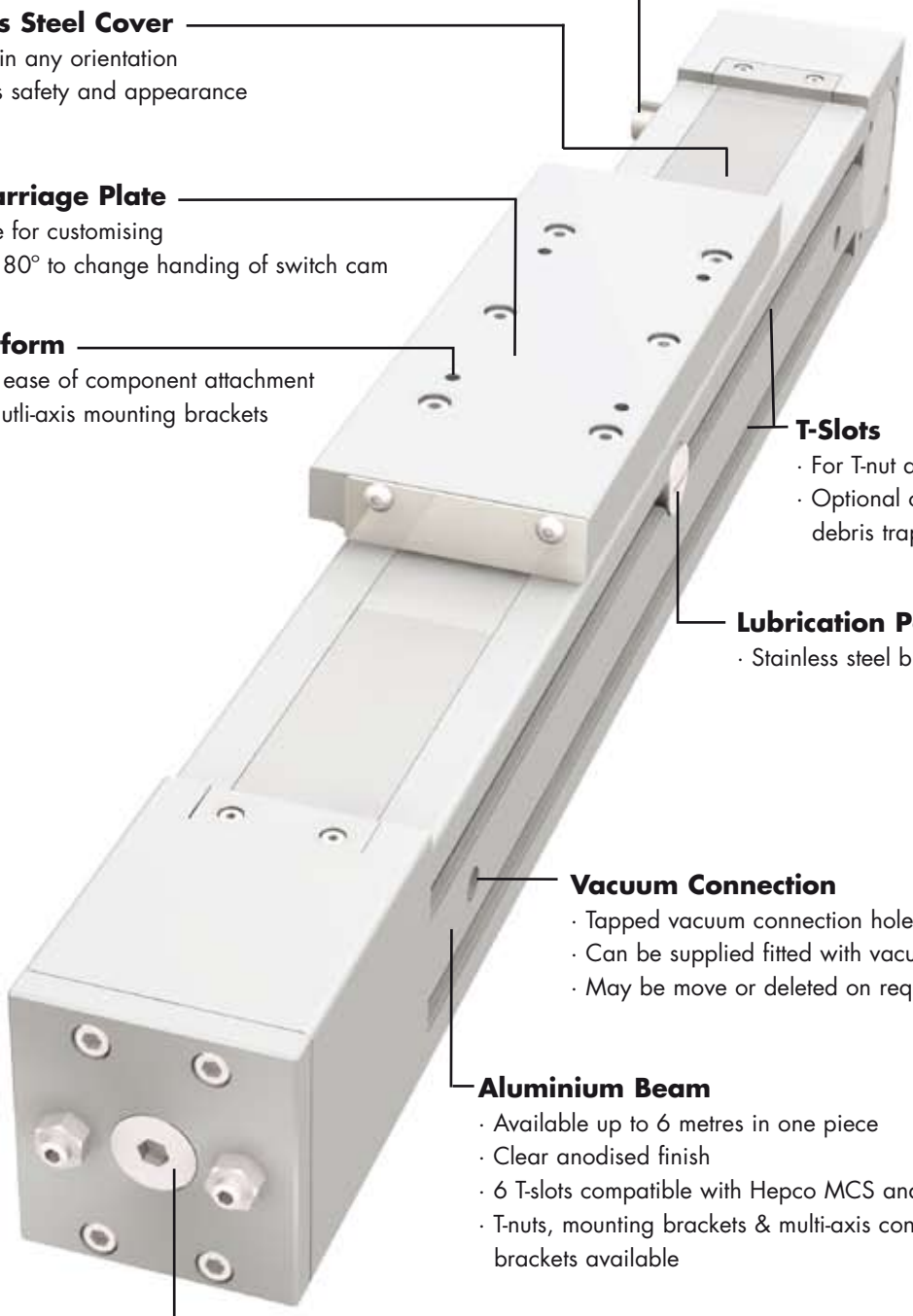

T-Slots
· For T-nut attachment
· Optional covers prevent debris traps

Lubrication Point
· Stainless steel blanking plug

Vacuum Connection
· Tapped vacuum connection holes
· Can be supplied fitted with vacuum connectors
· May be move or deleted on request

Aluminium Beam
· Available up to 6 metres in one piece
· Clear anodised finish
· 6 T-slots compatible with Hepco MCS and other profiles
· T-nuts, mounting brackets & multi-axis connection brackets available

Stainless Steel Fasteners
· All external fasteners are stainless steel

www.bergab.ru Берг АБ bergab@ya.ru Тел. (495)-228-06-21, факс (495) 223-3071

www.bergab.ru Берг АБ bergab@ya.ru Тел. (495)-228-06-21, факс (495) 223-3071

Data & Dimensions

The main dimensions of the SBD cleanroom version are shown in the table below. Further details can be obtained from the 3D CAD files available from Hepco's technical department or at www.HepcoMotion.com. Units are supplied in increments of 60mm (SBD20-80) and 80mm (SBD30-100) up to 6000mm in one piece 🕮10. Longer units are made from more than one piece. The nominal stroke length is calculated with the carriage against the internal buffers. In practice a clearance should be provided to allow for overrun.

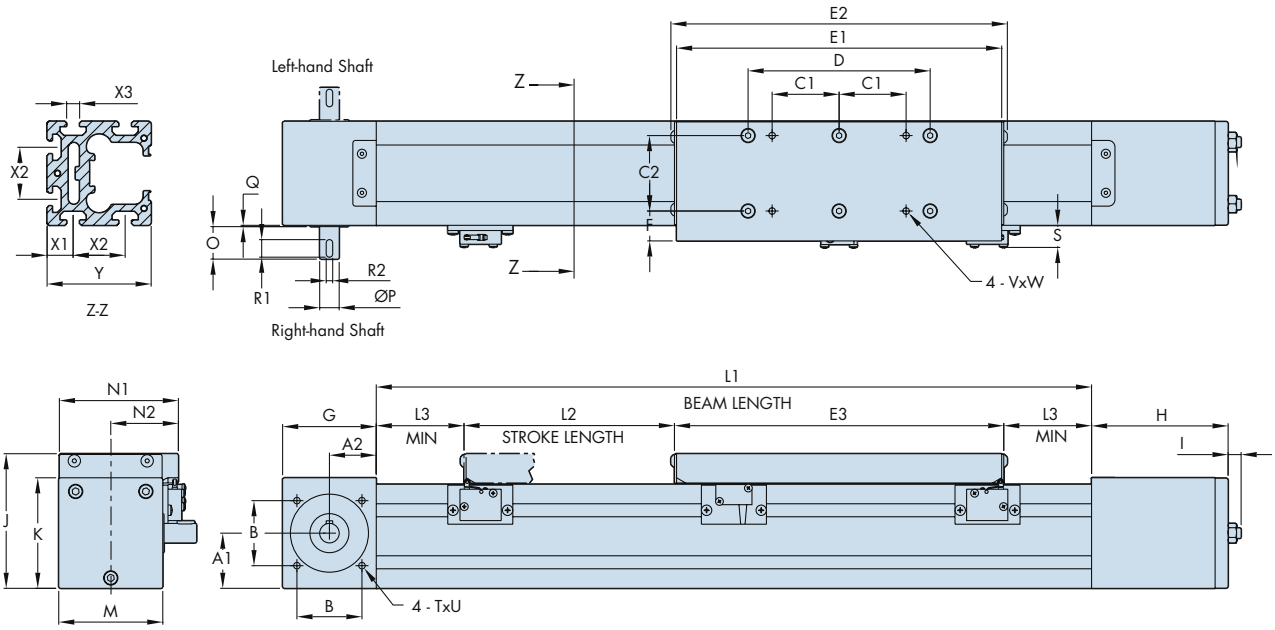

SBD Unit	A1	A2	B	C1	C2	D	E1	E2	E3	F	G	H	I	J	K	L1 (min)	L2 Nominal Stroke	L3 (min)
SBD20-80	42.4	36	50	51.5	58	140	250	259	253	23	72	105	12	103.5	85	550	L1 - 300	23.5
SBD30-100	51.6	48	65	65	76	180	300	309	303	24.5	96	145.5	13	123.5	105	580	L1 - 365	31

SBD Unit	M	N1	N2	O	P	Q	R1	R2	S	TxU	VxW	X1	X2	X3	Y
SBD20-80	80	91.5	52	25	15	1	13.5	5	17	M6 x 15	M6 x 9.5	20	40	10	80
SBD30-100	100	112	62.5	36	20	1	22	6	17	M6 x 15	M8 x 9.5	30	40	10	100

All dimensions in mm

The vacuum extraction connection hole positions together with the lubrication access plug are shown below. Hepco can supply vacuum connections pre-fitted on request. Vacuum holes can be repositioned to suit customer requirements or deleted.

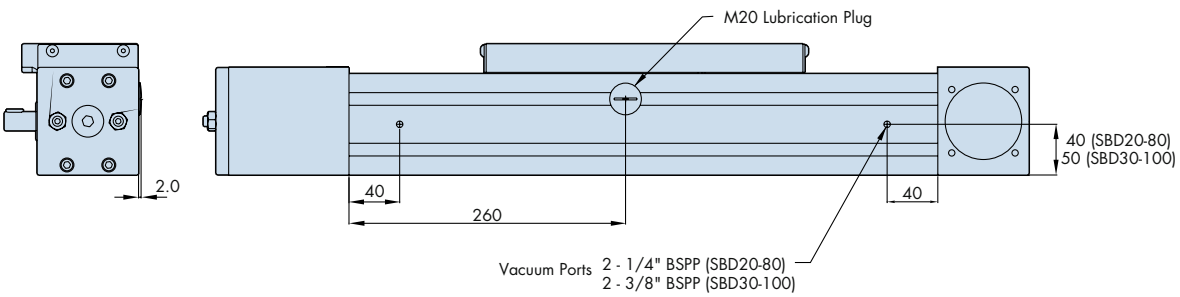

www.bergab.ru Берг АБ bergab@ya.ru Тел. (495)-228-06-21, факс (495) 223-3071

www.bergab.ru Берг АБ bergab@ya.ru Тел. (495)-228-06-21, факс (495) 223-3071

Axis Connections

The HepcoMotion SBD design allows for easy construction of multi-axis systems onto Hepco MCS and other frames and machine elements. A comprehensive range of mounting kits and accessories is available. Some typical system configurations are shown below to illustrate the versatility of the SBD design. Connection components have been identified together with their part numbers for ease of selection. Hepco's technical department can assist with application enquiries or undertake the design of multi-axis systems.

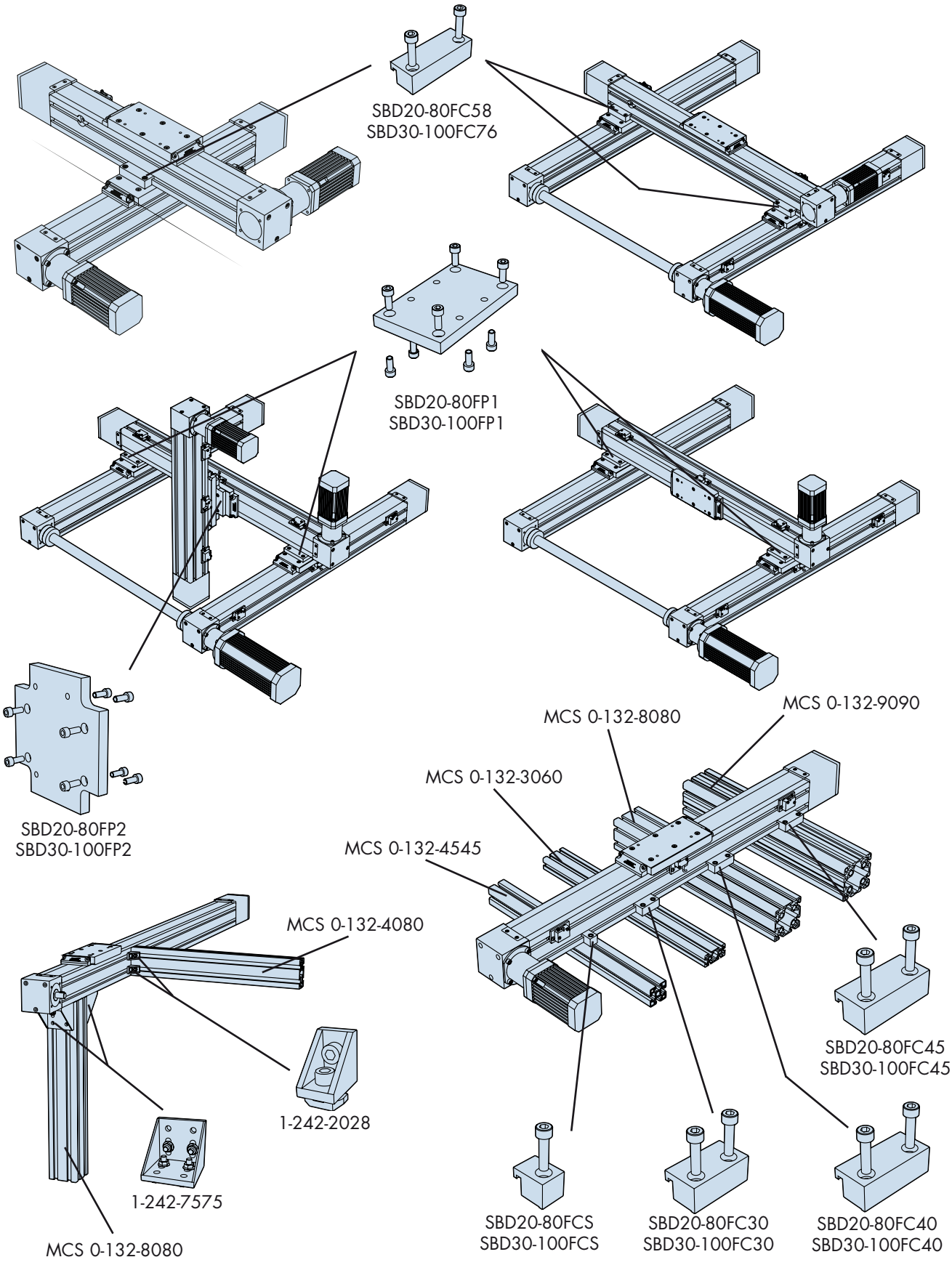

www.bergab.ru Берг АБ bergab@ya.ru Тел. (495)-228-06-21, факс (495) 223-3071

www.bergab.ru Берг АБ bergab@ya.ru Тел. (495)-228-06-21, факс (495) 223-3071

Load & Life Calculations

The nominal load capacities for the SBD (based on LBG ball guide dynamic load capacity) and a typical load corresponding to 10 000km* travel are included in the table below for each of the 5 direct and moment loading directions.

SBD Unit	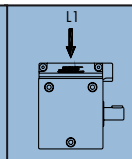	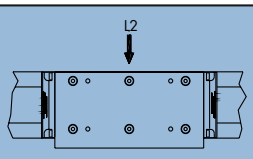	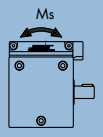	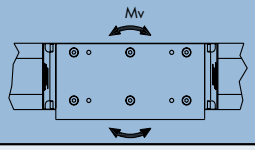	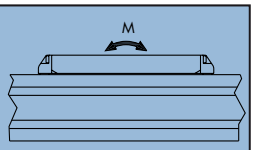
SBD20-80	21200N nominal 1813N @ 10 000km	21200N nominal 1813N @ 10 000km	189Nm nominal 16.2Nm @ 10 000km	175Nm nominal 14.9Nm @ 10 000km	175Nm nominal 14.9Nm @ 10 000km
SBD30-100	52100N nominal 4455N @ 10 000km	52100N nominal 4455N @ 10 000km	639Nm nominal 54Nm @ 10 000km	755Nm nominal 64Nm @ 10 000km	755Nm nominal 64Nm @ 10 000km

* The tabulated load figures above for 10 000km assume a value for variable load factor f_v = 2 which is suitable for most applications.

To calculate the life of an SBD unit, first calculate the load factor L_F using the equation below:

$$L_F = \frac{L_1}{L_{1(max)}} + \frac{L_2}{L_{2(max)}} + \frac{M_S}{M_{S(max)}} + \frac{M}{M_{(max)}} + \frac{M_V}{M_{V(max)}} \leq 0.2$$

The life of the system is then calculated using the equation below:

$$\text{System Life (km)} = 50 \times \left(\frac{1}{L_F \times f_v}\right)^3$$

Note: f_v is the variable load factor which takes account of speed and vibration/impact conditions. A value of 2 is appropriate for typical SBD applications, but consult Hepco for specific advice. For further guidance on load life calculations please visit www.HepcoMotion.com/sbddatauk and select datasheet No. 2 SBD load life calculations.

Technical Data

The table below includes the parameters necessary to calculate the performance and duty of an SBD system.

Parameter			SBD20-80		SBD30-100	
			Standard	Cleanroom	Standard	Cleanroom
Mass of carriage	Mc	kg	1.4	1.6	3.6	3.9
Mass of belt per m	Mb	kg/m	0.12		0.34	
Mass of SBD unit	Mu	kg	9.7 x L + 6.0	9.7 x L + 6.2	15.7 x L + 12.2	15.7 x L +12.5
Pulley radius	r	cm	2.39		3.5	
Drive efficiency			0.9		0.9	
Break away friction	Fba	N	25	10	35	25
Coefficient of friction	μ		0.01		0.01	
Beam moment of inertia*	I_{x-x}	mm^4	1500000		3700000	
	I_{y-y}		1800000		4600000	
Max linear force (belt)	Fmax	N	1000		3300	
Linear movement per shaft rev		mm	150		220	
Belt tooth pitch		mm	5		10	
LBG carriage basic load rating (dynamic)	C	N	21200		52100	

* The beam moment of inertia figure is used in the calculation of beam deflection, with a high figure corresponding to a stiff beam. For further guidance on beam deflection calculations please visit www.HepcoMotion.com/sbddatauk and select datasheet No. 3 SBD beam deflection calculations.

www.bergab.ru Берг АБ bergab@ya.ru Тел. (495)-228-06-21, факс (495) 223-3071

www.bergab.ru Берг АБ bergab@ya.ru Тел. (495)-228-06-21, факс (495) 223-3071

Limit switch assembly includes mechanical switch, bracket, fixing screws and T-nuts.

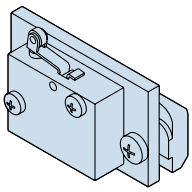

SBD20-80-V3SWA-M
SBD30-100-V3SWA-M

Limit switch assembly includes inductive switch, bracket, fixing screws and T-nuts.

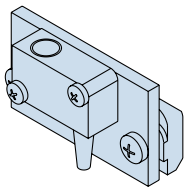

SBD20-80-V3SWA-I
SBD30-100-V3SWA-I

Plastic T-slot cover supplied fitted in each of the T-slots in the beam.

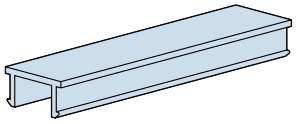

1-242-1016

The quick fit type T-nut can be inserted into T-slot and rotated through 90° to engage. T-nuts are available threaded M4, M5, M6 and M8.

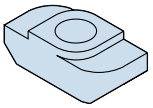

M4 = 1-242-1029
M5 = 1-242-1030
M6 = 1-242-1001
M8 = 1-242-1002

Drive shafts in a number of sizes and designs are available. Contact Hepco for details.

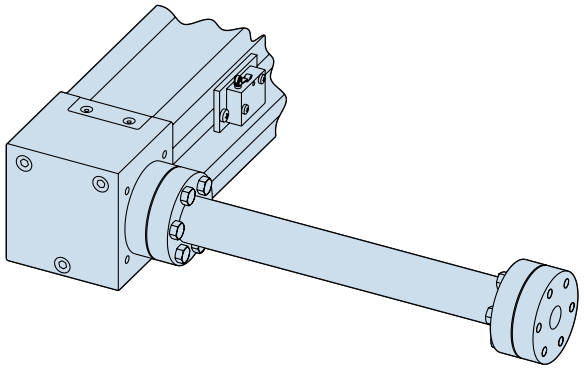

www.bergab.ru Берг АБ bergab@ya.ru Тел. (495)-228-06-21, факс (495) 223-3071

www.bergab.ru Берг АБ bergab@ya.ru Тел. (495)-228-06-21, факс (495) 223-3071

Ordering Details

The ordering information below is given to assist communication, but you are recommended to discuss your application with Hepco first so that we can help to specify the best unit configuration to suit your needs. A step-by-step SBD enquiry form is available please visit www.HepcoMotion.com/sbddatauk and select datasheet No. 4 SBD enquiry form.

Main Unit

SBD 20-80 L1750 C2 RS

SBD = product range

Size of unit : Choose **20-80** or **30-100**

Beam Length. Beam lengths are available in increments of 60mm from 550mm for SBD20-80 and increments of 80mm from 580mm for SBD30-100, 🕮3 & 6

Unit Type: **C1** = corrosion resistant 🕮1; **C2** = cleanroom 🕮5; leave **blank** for standard units 🕮1

Drive shaft: **LS** for left-hand; **RS** for right-hand; **DS** for double shaft 🕮4

Notes

www.HepcoMotion.com

www.bergab.ru Берг АБ bergab@ya.ru Тел. (495)-228-06-21, факс (495) 223-3071

www.bergab.ru Берг АБ bergab@ya.ru Тел. (495)-228-06-21, факс (495) 223-3071

HepcoMotion® Product Range

GV3
Linear Guidance and Transmission System

HDS
Heavy Duty Slide System

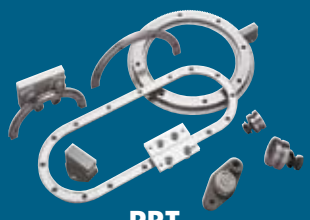

PRT
Ring Slides and Track System

SL2
Stainless Steel Based Slide System

LBG
Linear Ball Guides

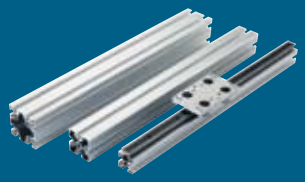

MCS
Aluminium Frame and Machine Construction System

HPS
Powerslide-2 Guided Rodless Cylinder

HDLS
Heavy Duty Driven Linear System

DLS
Linear Transmission and Positioning System

HTS
Telescopic Ball Bearing Slides

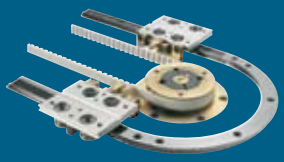

DTS
Driven Track System

BSP
Ballscrew Premier

Simple Select®
Vee Slide Linear Guidance Systems

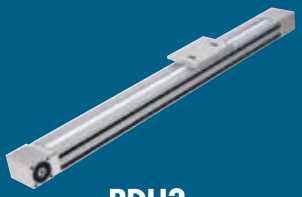

PDU2
Profile Driven Unit

PSD120
Profile Screw Driven Unit

BishopWisecarver Product Range

HepcoMotion® – Exclusive European partners and distributors for Bishop-Wisecarver since 1984.

DUALVEE
Single Edge Slide System

LoPro
Aluminium Based Slide System

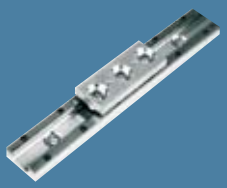

Utilitrak
Lightweight U Channel Guideway

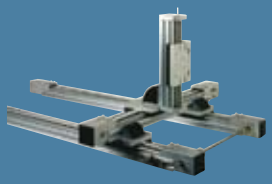

QuickTrak
Linear Motion System

For further information on HepcoMotion® products – please request our leaflet 'FPL'

HEPCO®
www.HepcoMotion.com

HepcoMotion®
Lower Moor Business Park, Tiverton Way, Tiverton, Devon, England EX16 6TG
Tel: +44 (0)1884 257000 Fax: +44 (0)1884 243500
Email: sales@hepcomotion.com

CATALOGUE No. SBD 01 UK © 2006 Hepco Slide Systems Ltd.
Reproduction in whole or part without prior authorisation from Hepco is prohibited. Although every effort has been made to ensure the accuracy of the information in this catalogue, Hepco cannot accept liability for any omissions or errors. Hepco reserves the right to make alterations to the product resulting from technical developments.
Many Hepco products are protected by: Patents, Copyright, Design Right or Registered Design. Infringement is strictly prohibited and may be challenged in law. The Customer's attention is drawn to the following clause in Hepco's conditions of sale:
'It shall be the Customer's sole responsibility to ensure that goods supplied by Hepco will be suitable or fit for any particular application or purpose of the Customer, whether or not such application or purpose is known to Hepco. The Customer will be solely responsible for any errors in, or omissions from, any specifications or information the Customer provides. Hepco will not be obliged to verify whether any such specifications or information are correct or sufficient for any application or purpose.'
Hepco's full conditions of sale are available on request and will apply to all quotations and contracts for the supply of items detailed in this catalogue.
HepcoMotion® is a trading name of Hepco Slide Systems Ltd.

INVESTOR IN PEOPLE

www.bergab.ru Берг АБ bergab@ya.ru Тел. (495)-228-06-21, факс (495) 223-3071