www.bergab.ru Берг АБ bergab@ya.ru Тел. (495)-228-06-21, факс (495) 223-3071

redi-rail®

Low Profile Slide - RRL Series

Low profile linear solution for automation, packaging and material handling!

NEW!

Compatible t-slot components with 3 carriage options!

SAVE TIME & MONEY

MADE IN THE USA

FEATURES & BENEFITS

- >> Cost Effective
- >> High Load Capacity
- >> Versatile Mounting Systems
- >> Rail Lengths up to 12 ft. (3600mm)

For more product information visit
www.pacific-bearing.com

SMOOTH & QUIET LINEAR MOTION™

Pacific® Bearing

www.bergab.ru - Берг АБ bergab@ya.ru Тел. (495)-228-06-21, факс (495) 223-3071

TECHNICAL INFORMATION

Materials:
Hardened steel shafting (stainless steel optional)
Gothic arch steel bearing with seals
Anodized aluminum rail and slider body
Stainless steel stud shaft

Max. Working Temperatures: -180°F (80°C)

Applications
Automation
Material Handling
Assembly
Packaging

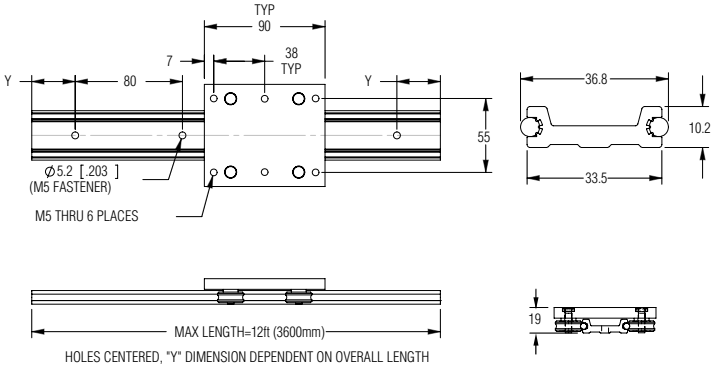

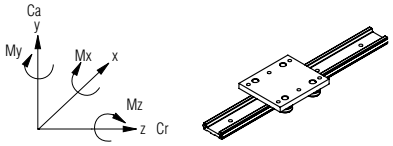

LOAD RATING					
AXIAL LOAD	Ca	115	LBS	510	N
RADIAL LOAD	Cr	275	LBS	1,225	N
MOMENT	Mx	125	LBS-IN	14	N-M
	My	275	LBS-IN	31	N-M
	Mz	115	LBS-IN	13	N-M

CARRIAGE STYLE

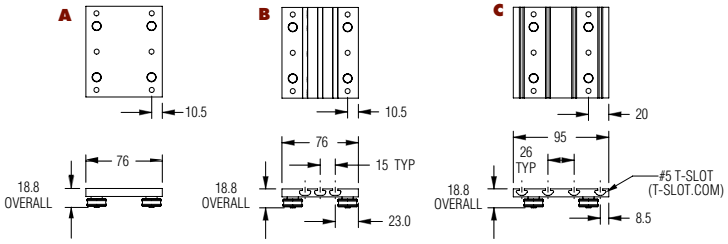

ORDERING INFORMATION

RAIL

RRL 14 R - XXXX - CO

EXAMPLE: RRL14R-0500-C1

- **Low Profile Redi-Rail** — RRL
- **Size 14** — 14
- **Rail (R)** — R
- **Length in mm** — XXXX
- **Corrosion Resistance** — CO
  - **Standard**
    - **CO** = Steel Rods, Clear Anodize
  - **Optional**
    - **C1** = Stainless Rods, Clear Anodize
    - **C2** = Stainless Rods, Electroless Nickel Plate
    - **C3** = Stainless Rods, FDA Approved Anti-microbial White Powder Coat

CARRIAGE

RRL 14 C X 19 X - CO

EXAMPLE: RRL14CA19F-C1

- **Low Profile Redi-Rail** — RRL
- **Size 14** — 14
- **Carriage** — C
- **Carriage Style** — X
  - **A** = (4) Roller
  - **B** = (4) Roller with T-Slots
  - **C** = (4) Roller wide with T-Slots
- **System Height** — 19
  - 19mm Standard
  - (Consult factory for other heights)
- **Preload** — X
  - **F** = Standard - Both Sides Fixed
  - **A** = Optional - 1-Side Adjustable
- **Corrosion Resistance** — CO
  - **Standard**
    - **CO** = Steel Rollers, Clear Anodize
  - **Optional**
    - **C1** = Stainless Rollers, Clear Anodize
    - **C2** = Stainless Rollers, Electroless Nickel Plate
    - **C3** = Stainless Rollers, FDA Approved Anti-microbial White Powder Coat

The data and specifications in this publication have been carefully compiled and are believed to be accurate and correct. However, it is the responsibility of the user to determine and ensure the suitability of Pacific Bearing® products for a specific application. Pacific Bearing's only obligation will be to repair or replace without charge, any defective components if returned promptly. No liability is assumed beyond such replacement. *Consult www.pacific-bearing.com for the latest technical updates. Specifications are subject to change without notice.

simplicity®

mini rail®

redi-rail®

Hevi-Rail® Heavy Duty Bearing Systems

dolphin guides®

1.800.962.8979 • www.pacific-bearing.com
FAX: 815.389.5790 • 6402 Rockton Road • Roscoe, IL 61073
SMOOTH & QUIET LINEAR MOTION™
Pacific® bearing