www.bergab.ru Берг АБ bergab@ya.ru Тел. (495)-228-06-21, факс (495) 223-3071

MOTION & CONTROL
NSK

NSK S1™ Series Precision Linear Guides

Series of interchangeable products enables fast delivery.
A new guide way system for machinery ensures environmental compatibility and high performance. Its quiet, smooth operation is friendly to both the workplace and the environment.

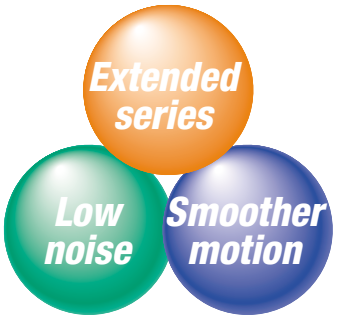

Patent Pending

www.bergab.ru Берг АБ bergab@ya.ru Тел. (495)-228-06-21, факс (495) 223-3071

www.bergab.ru Берг АБ bergab@ya.ru Тел. (495)-228-06-21, факс (495) 223-3071

The NSK S1™ Series meets the demand for smoother, silent motion

The popular series has been updated and expanded into a complete lineup with a new series of interchangeable products!

The NSK S1™ Series Linear Guide features resin retainers between the balls to prevent collision and rubbing.
Ball groove construction is standard in the LH and LS Series.

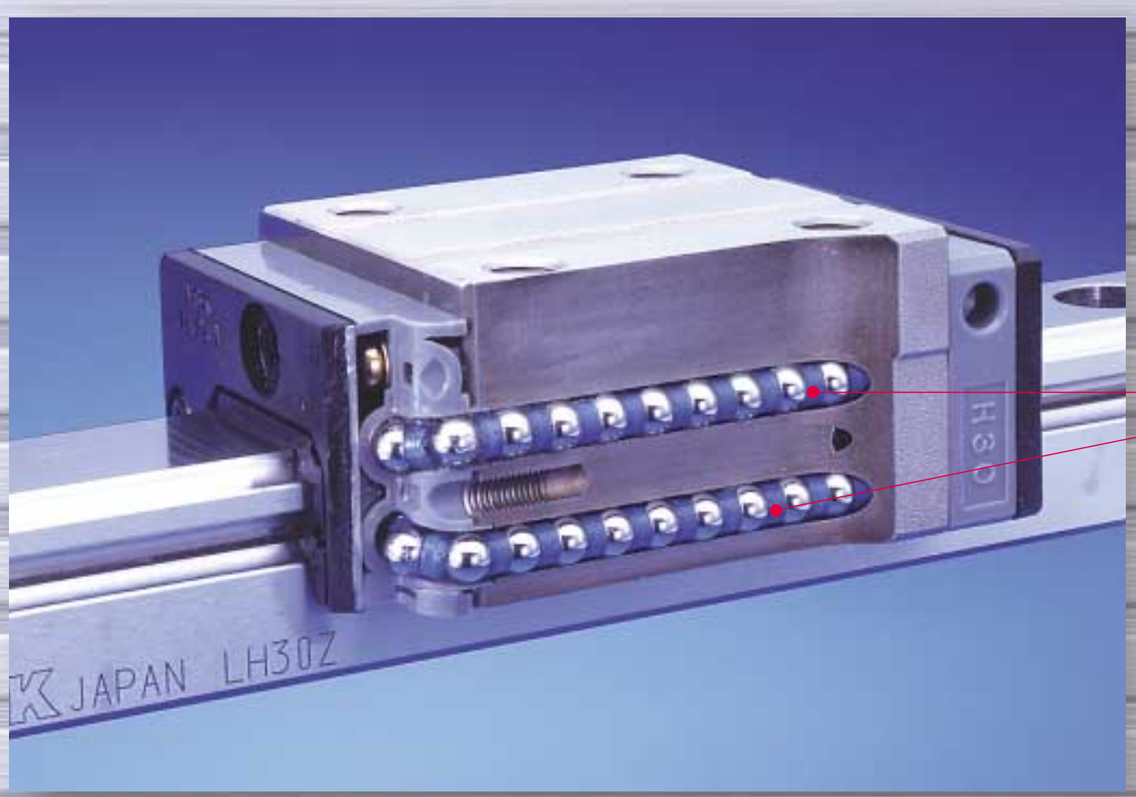

Feature 1 Lower noise and gentler tone

Incorporating a retainer piece and optimizing the circulation path enables steel ball circulation stability and the prevention of ball collision, resulting in noise reduction by 5 dB (A) or more than that of conventional NSK products. In addition, contributing to sound improvement (human-friendly sound quality) with lower noise levels, especially in the high-frequency range.

Lower noise and gentler tone

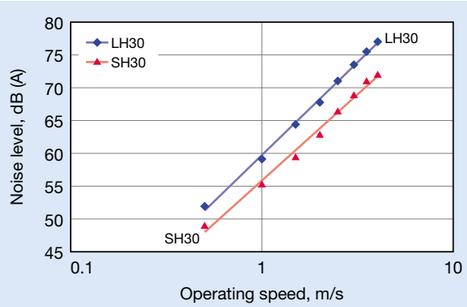

Fig. 1 Noise level comparison between LH30 and SH30

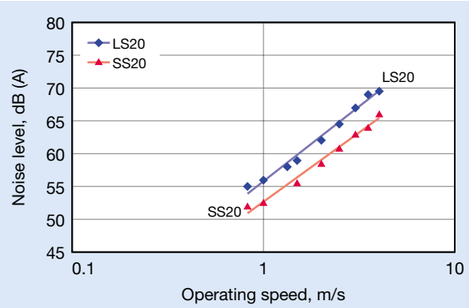

Fig. 2 Noise level comparison between LS20 and SS20

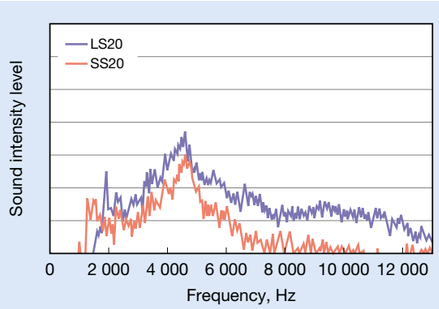

Fig. 3 Noise level comparison between LS20 and SS20

Test conditions: Oil lubrication (VG68)
Locate a microphone at 500 mm above the sample (both for LH30 and LS20)

✻Noise level depends on the microphone location.
Noise level drops by approximately 6 dB (A) when the distance from the microphone is doubled.

www.bergab.ru Берг АБ bergab@ya.ru Тел. (495)-228-06-21, факс (495) 223-3071

www.bergab.ru Берг АБ bergab@ya.ru Тел. (495)-228-06-21, факс (495) 223-3071

Feature 2 Smoother motion

Improved steel ball circulation stability, free of interference between the balls improves dynamic friction characteristics, resulting in smooth and stable motion, which is especially effective for low speed motion.

Smoother motion

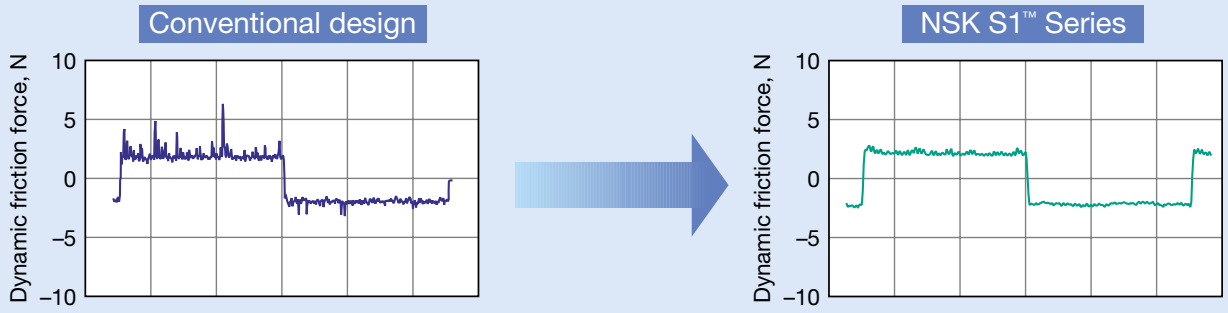

Test model: NSK LH30 slight preload
Evaluation conditions: Grease lubrication, Operating speed of 1 m/min

Fig. 4 Comparison in smooth motion between LH30 and SH30

Feature 3 Low dust generation

A resin retaining piece, which prevents steel balls collision, features effective low dust generation characteristics compared to conventional products.

Remarkable low dust generation

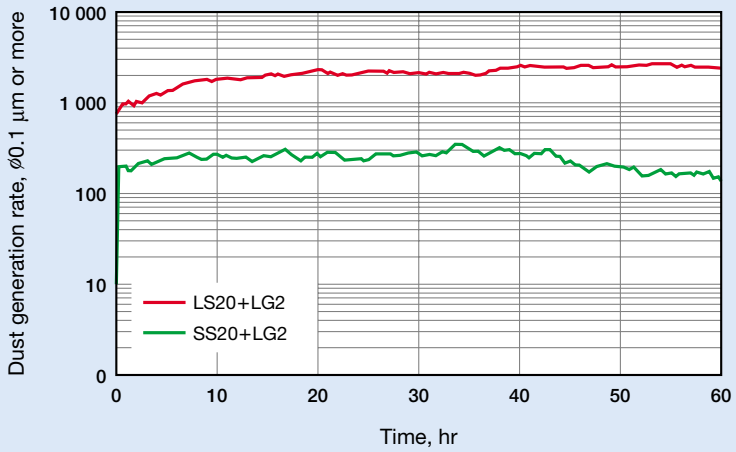

Fig. 5 Comparison of dust generation

Feature 4 Fast delivery

Lineup of interchangeable rails and ball slides in the series supports random matching and facilitates fast delivery.

www.bergab.ru Берг АБ bergab@ya.ru Тел. (495)-228-06-21, факс (495) 223-3071

1. Accuracy

The preloaded assembly types products have four accuracy grades; Ultra precision P3, Super precision P4, High precision P5 and Precision P6, while the interchangeable types have a regular class PC.

Table 1 shows the accuracy standard for the preloaded assembly type of the SH Series and SS Series, while Table 2 shows the accuracy standard for the interchangeable types.

Table 1 Accuracy grade for the preloaded assembly type

Unit: μm

Item \ Accuracy grade	Ultra precision P3	Super precision P4	High precision P5	Precision P6
Mounting height: H	±10	±10	±20	±40
Variation of mounting height: H (All slides on a pair or rails)	3	5	7	15
Mounting width dimension: W_2 or: W_3	±15	±15	±25	±50
Variation of mounting width dimension: W_2(s) or: W_3(s) (All slides on datum rails)	3	7	10	20
Running parallelism of face C against face A Running parallelism of face D against face B	Shown in Table 3			

Table 2 Accuracy grade for the interchangeable type

Item \ Accuracy grade	Normal interchangeable types PC
Mounting height: H	±20
Variation of mounting height: H (one rail)	15
Variation of mounting height: H (multiple rails)	30
Assembly width dimension: W_2 or : W_3	±30
Variation of assembly width dimension: W_2(s) or: W_3(s) (All slides on datum rails)	25
Running parallelism of face C against face A Running parallelism of face D against face B	Shown in Table 3

Table 3 Running parallelism tolerance

Rail length (mm) over	Rail length (mm) or less	Preload assembly types: Ultra precision P3	Super precision P4	High precision P5	Precision P6	Interchangeable types: Normal interchangeable type PC
	50	2	2	2	4.5	6
50	80	2	2	3	5	6
80	125	2	2	3.5	5.5	6.5
125	200	2	2	4	6	7
200	250	2	2.5	5	7	8
250	315	2	2.5	5	8	9
315	400	2	3	6	9	11
400	500	2	3	6	10	12
500	630	2	3.5	7	12	14
630	800	2	4.5	8	14	16
800	1 000	2.5	5	9	16	18
1 000	1 250	3	6	10	17	20
1 250	1 600	4	7	11	19	23
1 600	2 000	4.5	8	13	21	26
2 000	2 500	5	10	15	22	29
2 500	3 150	6	11	17	25	32
3 150	4 000	9	16	23	30	34

www.bergab.ru Берг АБ bergab@ya.ru Тел. (495)-228-06-21, факс (495) 223-3071

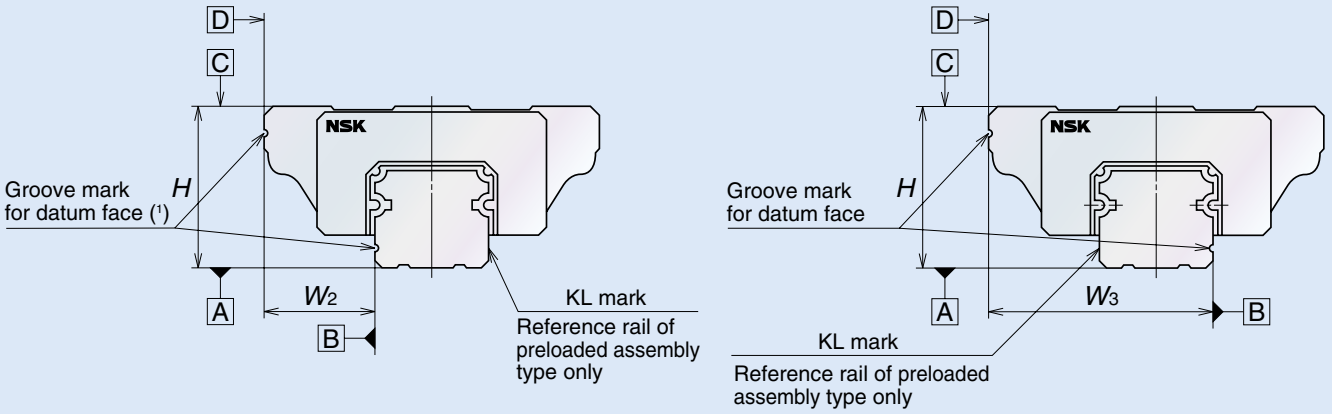

Fig. 6 Assembly dimentions

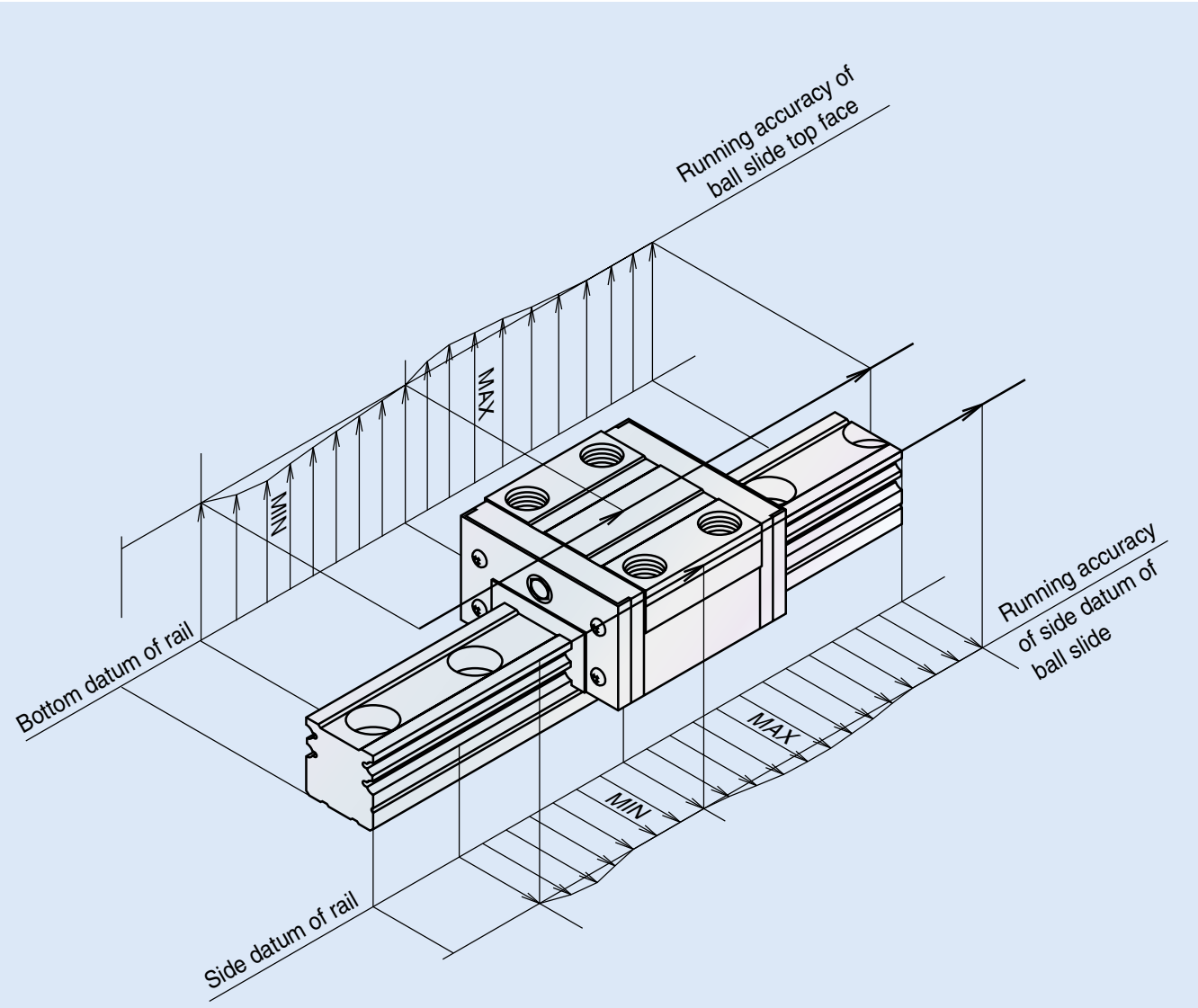

Fig. 7 Running parallelism

www.bergab.ru Берг АБ bergab@ya.ru Тел. (495)-228-06-21, факс (495) 223-3071

www.bergab.ru Берг АБ bergab@ya.ru Тел. (495)-228-06-21, факс (495) 223-3071

2. Preload and ridigity

We offer three levels of preload: Medium preload (Z3), Slight preload (Z1) and Fine clearance (Z0), along with interchangeable types of Fine clearance (ZZ). Values for preload and rigidity of the SH and SS Series are shown in Tables 4 and 5.

Table 4 Preload and rigidity of the SH Series

Model		Preload (N)		Rigidity (N/μm)			
				Vertical direction		Lateral direction	
		Slight preload (Z1)	Medium preload (Z3)	Slight preload (Z1)	Medium preload (Z3)	Slight preload (Z1)	Medium preload (Z3)
High load capacity type	SH15 AN, EL, FL	78	441	127	215	88	166
	SH20 AN, EL, FL	147	784	157	274	127	225
	SH25 AN, AL, EL, FL	196	1 180	186	343	137	255
	SH30 AN, AL	245	1 470	196	363	137	265
	SH30 EL, FL	294	1 670	245	441	176	323
	SH35 AN, AL, EL, FL	390	2 160	294	529	205	382
Ultra high load capacity type	SH15 BN, GL, HL	98	637	186	333	137	264
	SH20 BN, GL, HL	196	1 080	235	421	186	343
	SH25 BN, BL, GL, HL	245	1 570	284	529	196	382
	SH30 BN, BL, GL, HL	343	2 160	333	627	235	451
	SH35 BN, BL, GL, HL	490	2 840	411	755	284	529

Note: Because the clearance value for Fine clearance (Z0) is 0—3μm, the preload value is zero.

Table 5 Preload and rigidity of the SS Series

Model		Preload (N)		Rigidity (N/μm)			
				Vertical direction		Lateral direction	
		Slight preload (Z1)	Medium preload (Z3)	Slight preload (Z1)	Medium preload (Z3)	Slight preload (Z1)	Medium preload (Z3)
High load capacity type	SS15 AL, EL, FL	69	392	118	216	88	157
	SS20 AL, EL, FL	88	490	147	255	108	186
	SS25 AL, EL, FL	147	833	196	353	137	255
	SS30 AL, EL, FL	245	1 370	245	441	176	323
	SS35 AL, EL, FL	294	1 860	284	539	205	392
Medium load capacity type	SS15 CL, JL, KL	39	245	69	127	49	88
	SS20 CL, JL, KL	59	343	88	157	59	118
	SS25 CL ,JL, KL	98	588	108	206	78	147
	SS30 CL, JL, KL	147	882	127	235	98	176
	SS35 CL, JL, KL	196	1 180	166	304	117	225

Note: Because the clearance value for Fine clearance (Z0) is 0—3μm, the preload value is zero.

Preload value of SH and SH Series interchangeable types are shown in Table 6.

Table 6 Preload and rigidity of the interchangeable types

unit: μm

Model	Slight preload ZZ
SH15	-4–0
SH20	-5–0
SH25	-5–0
SH30	-7–0
SH35	-7–0

Model	Slight preload ZZ
SS15	-4–0
SS20	-4–0
SS25	-5–0
SS30	-5–0
SS35	-8–0

Negative values indicate preload volume (elastic deformation of balls).

www.bergab.ru Берг АБ bergab@ya.ru Тел. (495)-228-06-21, факс (495) 223-3071

www.bergab.ru Берг АБ bergab@ya.ru Тел. (495)-228-06-21, факс (495) 223-3071

3. Reference number

This number comprises codes and numbers which indicate key specifications, and is generated when the customer and NSK have defined specifications.

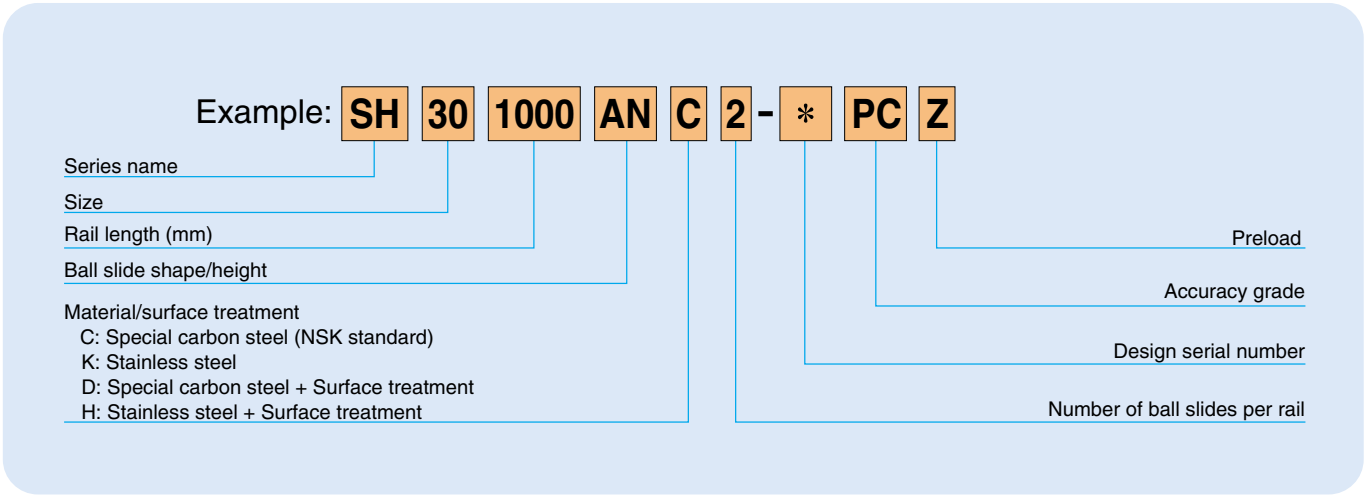

3.1 Combination of accuracy and preload

		Accuracy grade				
		Ultra super precision	Super precision	Precision	High	Normal interchangeable type
Without NSK K1 lubrication unit		P3	P4	P5	P6	PC
With NSK K1 lubrication unit		K3	K4	K5	K6	KC
Preload	Fine clearance Z0	○	○	○	○	—
	Slight preload Z1	○	○	○	○	—
	Medium preload Z3	○	○	○	○	—
	Interchangeable preload ZZ	—	—	—	—	○

○: Available

3.2 Reference number for single bearing of interchangeable types

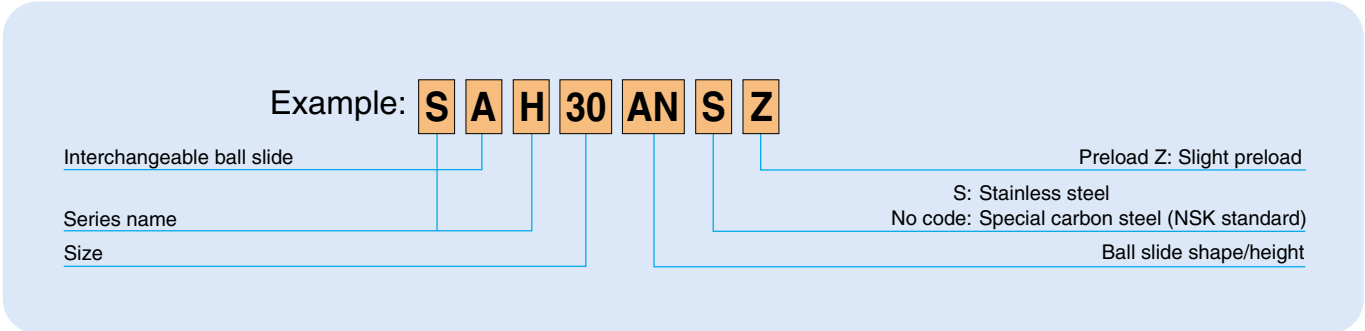

www.bergab.ru Берг АБ bergab@ya.ru Тел. (495)-228-06-21, факс (495) 223-3071

www.bergab.ru Берг АБ bergab@ya.ru Тел. (495)-228-06-21, факс (495) 223-3071

3.3 Reference number for single rail of interchangeable types

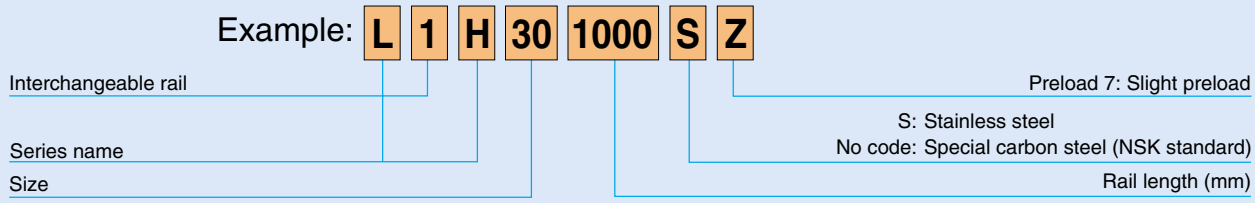

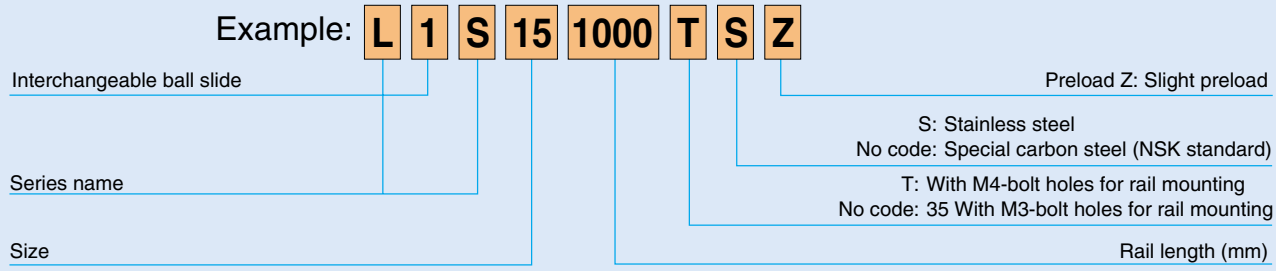

4. Application examples

- Applications that require lower noise levels and a lower level of vibration

  Instruments, printers, medical equipment, office machines, etc.

- Applications that require smoother motion

  Electric wire cutting discharge machines, scanners and pattern generators and steppers.

Handling Precautions

1. Temperature range ····· Maximum operating temperature: 50°C
   Maximum momentary temperature: 80°C
2. Usage conditions ····· We recommend using "NSK S1™ Series" products in a clean environment in order to utilize their full range of capabilities.
3. Handling of interchangeable types
   ① Interchangeable ball slide will be delivered with a provisional rail (inserting fixture).
   ② Do not remove the ball slide from provisional rail until inserting into a rail.
   ③ Be sure to use the provisional rail when removing ball slide(s) form a rail.

www.bergab.ru Берг АБ bergab@ya.ru Тел. (495)-228-06-21, факс (495) 223-3071

SH-AN (High load type) / **SH-BN** (Super high load type)

Reference number

Example: SH 30 1000 AN C 2 - * PC Z

- Series name: SH
- Size: 30
- Rail length (mm): 1000
- Ball slide shape/height: AN
- Material/surface treatment: C: Special carbon steel (NSK standard); K: Stainless steel (LH15 to LH30 only)
- Number of ball slides per rail: 2
- Design serial number: *
- Accuracy grade: PC
- Preload: Z

Front view of AN and BN types

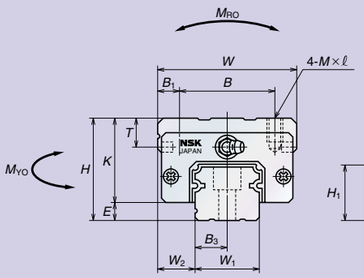

Side view of AN type

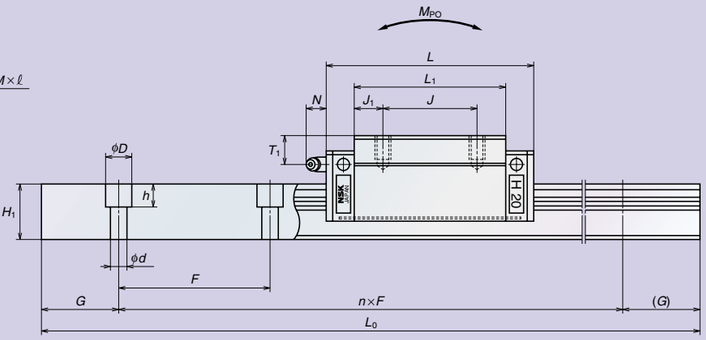

Side view of BN type

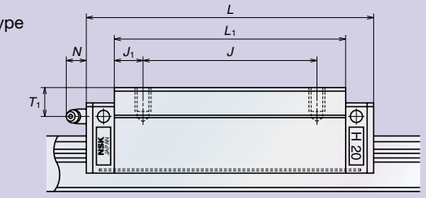

Reference number for rail of interchangeable types

For regular rails (non-jointed rail)

Example: L 1 H 30 1000 S Z

- Interchangeable ball slide: L
- Series name: 1H
- Size: 30
- Rail length (mm): 1000
- S: Stainless steel; No code: Special carbon steel (NSK standard): S
- Z: Slight Preload: Z

For more details regarding joint rails, please contact us.

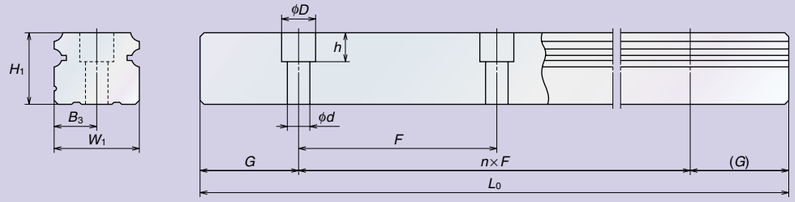

Reference number for ball slide of interchangeable types

Example: S A H 30 AN S Z

- Interchangeable ball slide: SA
- Series name: H
- Size: 30
- Ball slide shape/height: AN
- S: Stainless steel; No code: Special carbon steel (NSK standard): S
- Preload Z: Slight preload: Z

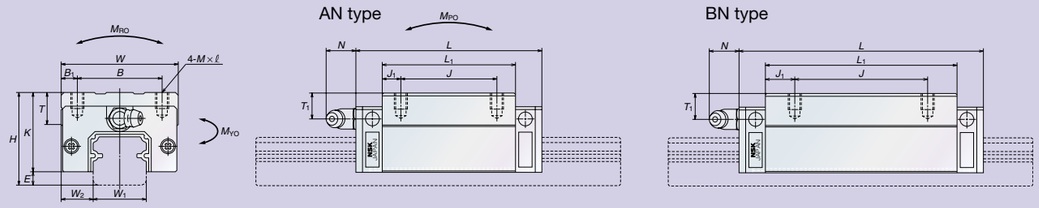

Model No.		Assembly			Ball slide										Rail							Basic load rating					Ball diameter	Weight	
		Height			Width	Length	Mounting tap hole						Grease fitting			Width	Height	Pitch	Mounting bolt hole			Max. length	Dynamic	Static	Static moment				Ball slide	Rail
		H	E	W_2	W	L	B	J	M×pitch×ℓ	B_1	L_1	J_1	K	T	Hole size	T_1	N	W_1	H_1	F	d×D×h	B_3	G (recommended)	L_{omax} ( )for stainless	C (N)	C_0 (N)	M_{RO} (N•m)	M_{PO} (N•m)	M_{YO} (N•m)	D_W	(kg)	(kg/m)
SH15AN	SAH15AN	28	4.6	9.5	34	55	26	26	M4×0.7×6	4	39	6.5	23.4	8	ø3	8.5	3.3	15	15	60	4.5×7.5×5.3	7.5	20	2 000	7 800	14 700	89	65	65	3.175	0.18	1.6
SH15BN	SAH15BN					74					58	16												(1 800)	10 900	23 500	143	158	157		0.26	
SH20AN	SAH20AN	30	5	12	44	69.8	32	36	M5×0.8×6	6	50	7	25	12	M6×0.75	5	11	20	18	60	6×9.5×8.5	10	20	3 960	13 400	22 800	196	157	157	3.968	0.33	2.6
SH20BN	SAH20BN					91.8		50			72	11												(3 500)	17 500	37 000	284	323	323		0.48	
SH25AN	SAH25AN	40	7	12.5	48	79	35	35	M6×1×9	6.5	58	11.5	33	12	M6×0.75	10	11	23	22	60	7×11×9	11.5	20	3 960	19 800	36 000	333	284	284	4.762	0.55	3.6
SH25BN	SAH25BN					107		50			86	18												(3 500)	25 800	49 100	451	519	510		0.82	
SH30AN	SAH30AN	45	9	16	60	85.6	40	40	M8×1.25×10	10	59	9.5	36	14	M6×0.75	10	11	28	26	80	9×14×12	14	20	4 000	23 900	40 300	451	304	304	5.556	0.77	5.2
SH30BN	SAH30BN					124.6		60			98	19												(3 500)	35 800	67 200	745	794	784		1.3	
SH35AN	SAH35AN	55	9.5	18	70	109	50	50	M8×1.25×12	10	80	15	45.5	15	M6×0.75	15	11	34	29	80	9×14×12	17	20	4 000	36 600	63 100	868	624	614	6.35	1.5	7.2
SH35BN	SAH35BN					143		72			114	21													47 600	91 800	1 260	1 265	1 235		2.1	

SH-AL (High load type) / **SH-BL** (Super high load type)

Reference number

Example: **SH 30 1000 AL C 2 - ✻ PC Z**

- Series name
- Size
- Rail length (mm)
- Ball slide shape/height
- Material/surface treatment
  - C: Special carbon steel (NSK standard)
  - K: Stainless steel (LH15 to LH30 only)
- Number of ball slides per rail
- Design serial number
- Accuracy grade
- Preload

Front view of AL and BL types

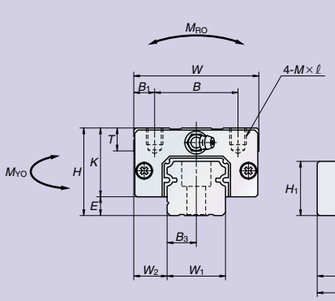

Side view of AL type

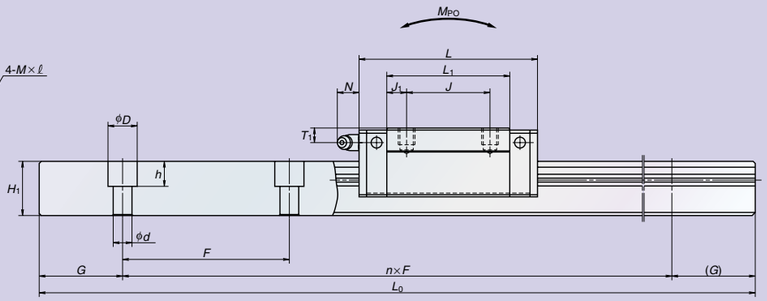

Side view of BL type

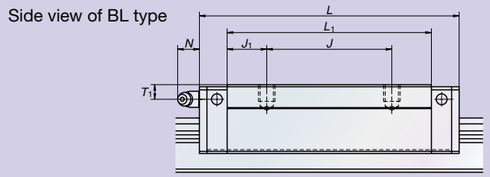

Reference number for rail of interchangeable types

For regular rails (non-jointed rail)

Example: **L 1 H 30 1000 S Z**

- Interchangeable ball slide
- Series name
- Size
- Rail length (mm)
- S: Stainless steel
  No code: Special carbon steel (NSK standard)
- Z: Slight Preload

For more details regarding joint rails, please contact us.

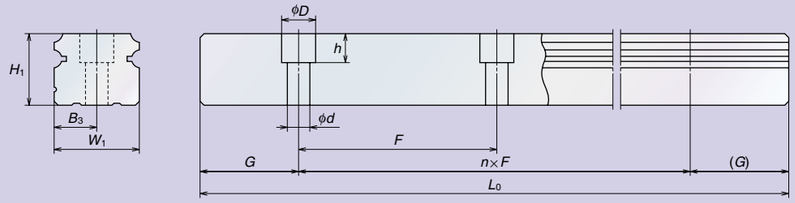

Reference number for ball slide of interchangeable types

Example: **S A H 30 AL S Z**

- Interchangeable bearing
- Series name
- Size
- Ball slide shape/height
- S: Stainless steel
  No code: Special carbon steel (NSK standard)
- Preload Z: Slight preload

AL type

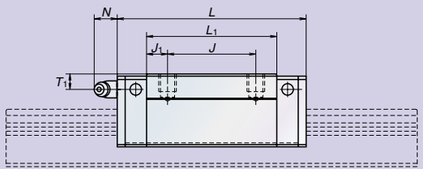

BL type

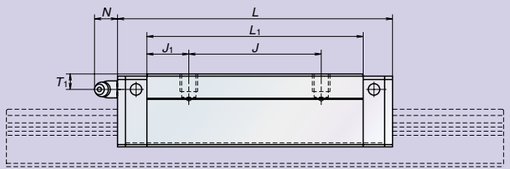

Model No.		Assembly			Ball slide											Rail							Basic load rating					Ball diameter	Weight	
		Height			Width	Length	Mounting tap hole			B_1	L_1	J_1	K	T	Grease fitting			Width	Height	Pitch	Mounting bolt hole		G	Max. length	Dynamic	Static	Static moment				Ball slide	Rail
		H	E	W_2	W	L	B	J	M×pitch×ℓ						Hole size	T_1	N	W_1	H_1	F	d×D×h	B_3	(recommended)	L_{omax} ( )for stainless	C (N)	C_0 (N)	M_{RO} (N•m)	M_{PO} (N•m)	M_{YO} (N•m)	D_W	(kg)	(kg/m)
SH25AL	SAH25AL	36	7	12.5	48	79	35	35	M6×1×6	6.5	58	11.5	29	12	M6×0.75	6	11	23	22	60	7×11×9	11.5	20	3 960	19 800	36 000	333	284	284	4.762	0.55	3.6
SH25BL	SAH25BL					107		50			86	18												(3 500)	25 800	49 100	451	519	510		0.82	
SH30AL	SAH30AL	42	9	16	60	85.6	40	40	M8×1.25×8	10	59	9.5	33	14	M6×0.75	7	11	28	26	80	9×14×12	14	20	4 000	23 900	40 300	451	304	304	5.556	0.77	5.2
SH30BL	SAH30BL					124.6		60			98	19												(3 500)	35 800	67 200	745	794	784		1.3	
SH35AL	SAH35AL	48	9.5	18	70	109	50	50	M8×1.25×8	10	80	15	38.5	15	M6×0.75	8	11	34	29	80	9×14×12	17	20	4 000	36 600	63 100	868	624	614	6.35	1.5	7.2
SH35BL	SAH35BL					143		72			114	21													47 600	91 800	1 260	1 265	1 235		2.1	

SH-EL (High load type) / **SH-GL** (Super high load type)

Reference number

Example: **SH 30 1000 EL C [ ] - * PC Z**

- Series name
- Size
- Rail length (mm)
- Ball slide shape/height
- Material/surface treatment
  - C: Special carbon steel (NSK standard)
  - K: Stainless steel (LH15 to LH30 only)
- Number of ball slides per rail
- Design serial number
- Accuracy grade
- Preload

Front view of EL and GL types

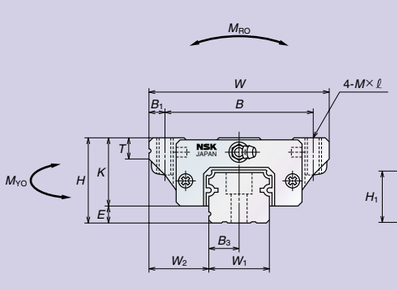

Side view of EL type

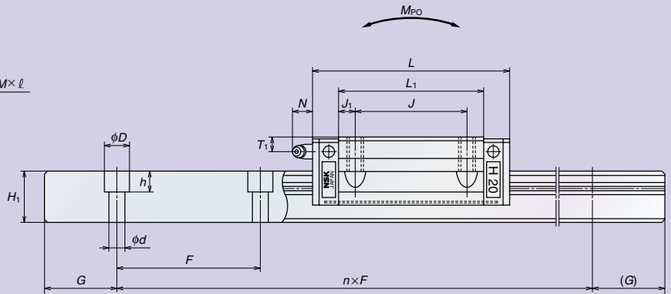

Side view of GL type

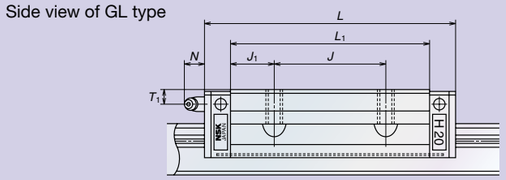

Reference number for rail of interchangeable types

For regular rails (non-jointed rail)

Example: **L 1 H 30 1000 S Z**

- Interchangeable ball slide
- Series name
- Size
- Rail length (mm)
- S: Stainless steel / No code: Special carbon steel (NSK standard)
- Z: Slight Preload

For more details regarding joint rails, please contact us.

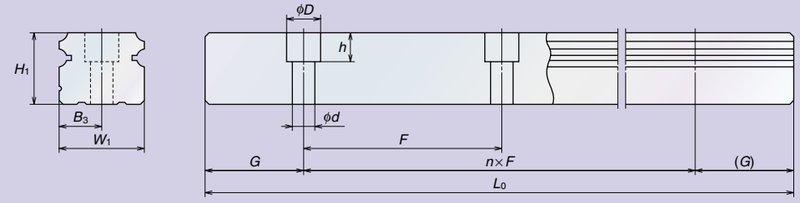

Reference number for ball slide of interchangeable types

Example: **S A H 30 EL S Z**

- Interchangeable bearing
- Series name
- Size
- Ball slide shape/height
- S: Stainless steel / No code: Special carbon steel (NSK standard)
- Preload Z: Slight preload

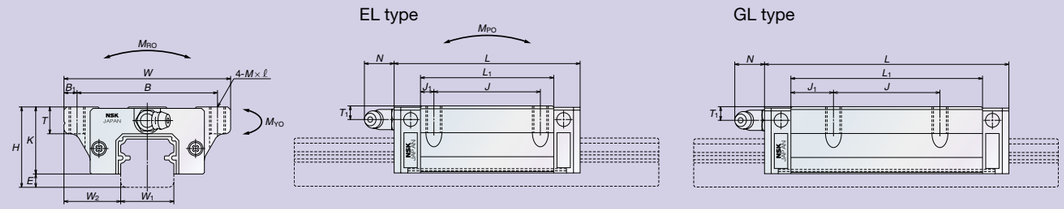

Model No.		Assembly			Ball slide										Rail							Basic load rating					Ball diameter	Weight	
		Height			Width	Length	Mounting tap hole							Grease fitting			Width	Height	Pitch	Mounting bolt hole			Max. length	Dynamic	Static	Static moment				Ball slide	Rail
		H	E	W_2	W	L	B	J	M×pitch×ℓ	B_1	L_1	J_1	K	T	Hole size	T_1	N	W_1	H_1	F	d×D×h	B_3	G (recommended)	L_{omax} ( ) for stainless	C (N)	C_0 (N)	M_{RO} (N•m)	M_{PO} (N•m)	M_{YO} (N•m)	D_W	(kg)	(kg/m)
SH15EL	SAH15EL	24	4.6	16	47	55	38	30	M5×0.8×8	4.5	39	4.5	19.4	8	ø3	4.5	3.3	15	15	60	4.5×7.5×5.3	7.5	20	2 000	7 800	14 700	89	65	65	3.175	0.17	1.6
SH15GL	SAH15GL					74					58	14												(1 800)	10 900	23 500	143	158	157		0.25	
SH20EL	SAH20EL	30	5	21.5	63	69.8	53	40	M6×1×10	5	50	5	25	10	M6×0.75	5	11	20	18	60	6×9.5×8.5	10	20	3 960	13 400	22 800	196	157	157	3.968	0.45	2.6
SH20GL	SAH20GL					91.8					72	16												(3 500)	17 500	37 000	284	323	323		0.65	
SH25EL	SAH25EL	36	7	23.5	70	79	57	45	M8×1.25×16	6.5	58	6.5	29	11	M6×0.75	6	11	23	22	60	7×11×9	11.5	20	3 960	19 800	36 000	333	284	284	4.762	0.63	3.6
SH25GL	SAH25GL					107			(M8×1.25×12)		86	20.5		(12)										(3 500)	25 800	49 100	451	519	510		0.93	
SH30EL	SAH30EL	42	9	31	90	98.6	72	52	M10×1.5×18	9	72	10	33	11	M6×0.75	7	11	28	26	80	9×14×12	14	20	4 000	27 600	49 300	549	441	441	5.556	1.2	5.2
SH30GL	SAH30GL					124.6			(M10×1.5×15)		98	23		(15)										(3 500)	35 800	67 200	745	794	784		1.6	
SH35EL	SAH35EL	48	9.5	33	100	109	82	62	M10×1.5×20	9	80	9	38.5	12	M6×0.75	8	11	34	29	80	9×14×12	17	20	4 000	36 600	63 100	868	624	614	6.35	1.7	7.2
SH35GL	SAH35GL					143					114	26													47 600	91 800	1 260	1 265	1 235		2.4	

Dimensions in ( ) are applicable to stainless steel products.

www.bergab.ru Берг АБ bergab@ya.ru Тел. (495)-228-06-21, факс (495) 223-3071

SH-FL (High load type) / **SH-HL** (Super high load type)

Reference number

Example: **SH 30 1000 FL C 2 - * PC Z**

- Series name
- Size
- Rail length (mm)
- Ball slide shape/height
- Material/surface treatment
  - C: Special carbon steel (NSK standard)
  - K: Stainless steel (LH15 to LH30 only)
- Number of ball slides per rail
- Design serial number
- Accuracy grade
- Preload

Reference number for rail of interchangeable types

For regular rails (non-jointed rail)

Example: **L 1 H 30 1000 S Z**

- Interchangeable ball slide
- Series name
- Size
- Rail length (mm)
- S: Stainless steel
  No code: Special carbon steel (NSK standard)
- Z: Slight Preload

For more details regarding joint rails, please contact us.

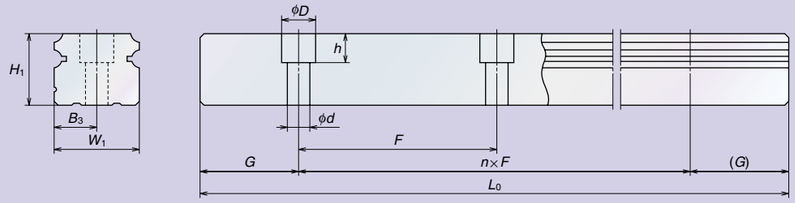

Reference number for ball slide of interchangeable types

Example: **S A H 30 FL S Z**

- Interchangeable bearing
- Series name
- Size
- Ball slide shape/height
- S: Stainless steel
  No code: Special carbon steel (NSK standard)
- Z: Slight preload

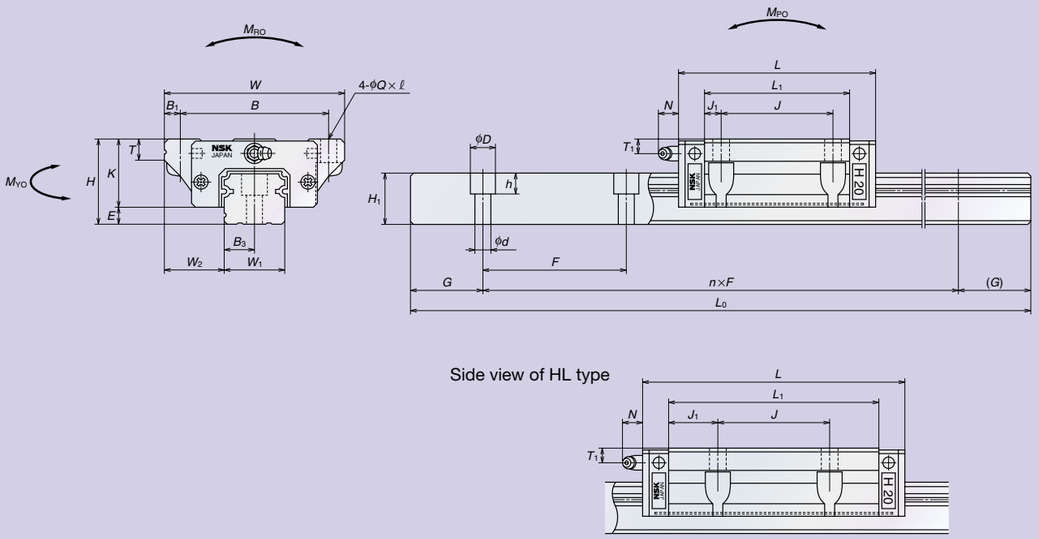

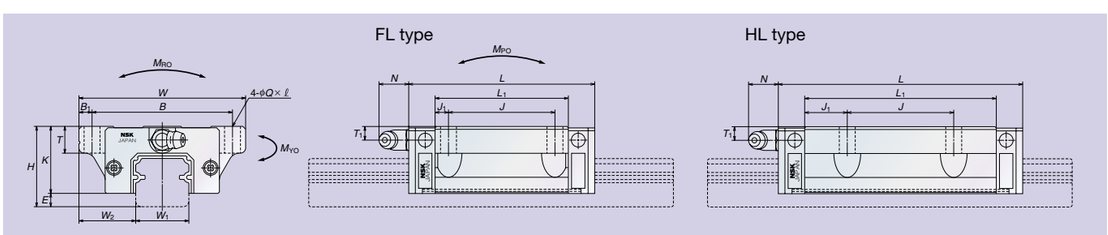

Model No.		Assembly			Ball slide										Rail							Basic load rating					Ball diameter	Weight	
		Height			Width	Length	Mounting tap hole							Grease fitting			Width	Height	Pitch	Mounting bolt hole			Max. length	Dynamic	Static	Static moment				Ball slide	Rail
		H	E	W2	W	L	B	J	Q×ℓ	B1	L1	J1	K	T	Hole size	T1	N	W1	H1	F	d×D×h	B3	G (recommended)	Lomax ( )for stainless	C (N)	C0 (N)	MRO (N•m)	MPO (N•m)	MYO (N•m)	DW	(kg)	(kg/m)
SH15FL	SAH15FL	24	4.6	16	47	55	38	30	4.5×7	4.5	39	4.5	19.4	8	ø3	4.5	3.3	15	15	60	4.5×7.5×5.3	7.5	20	2 000	7 800	14 700	89	65	65	3.175	0.17	1.6
SH15HL	SAH15HL					74					58	14												(1 800)	10 900	23 500	143	158	157		0.25	
SH20FL	SAH20FL	30	5	21.5	63	69.8	53	40	6×10	5	50	5	25	10	M6×0.75	5	11	20	18	60	6×9.5× 8.5	10	20	3 960	13 400	22 800	196	157	157	3.968	0.45	2.6
SH20HL	SAH20HL					91.8					72	16												(3 500)	17 500	37 000	284	323	323		0.65	
SH25FL	SAH25FL	36	7	23.5	70	79	57	45	7×10	6.5	58	6.5	29	11	M6×0.75	6	11	23	22	60	7×11×9	11.5	20	3 960	19 800	36 000	333	284	284	4.762	0.63	3.6
SH25HL	SAH25HL					107			(7×11.5)		86	20.5		(12)										(3 500)	25 800	49 100	451	519	510		0.93	
SH30FL	SAH30FL	42	9	31	90	98.6	72	52	9×12	9	72	10	33	11	M6×0.75	7	11	28	26	80	9×14×12	14	20	4 000	27 600	49 300	549	441	441	5.556	1.2	5.2
SH30HL	SAH30HL					124.6			(9×14.5)		98	23		(15)										(3 500)	35 800	67 200	745	794	784		1.6	
SH35FL	SAH35FL	48	9.5	33	100	109	82	62	9×13	9	80	9	38.5	12	M6×0.75	8	11	34	29	80	9×14×12	17	20	4 000	36 600	63 100	868	624	614	6.35	1.7	7.2
SH35HL	SAH35HL					143					114	26													47 600	91 800	1 260	1 265	1 235		2.4	

Dimensions in ( ) are applicable to stainless steel products.

www.bergab.ru Берг АБ bergab@ya.ru Тел. (495)-228-06-21, факс (495) 223-3071

SS-AL (High load type) / **SS-CL** (medium load type)

Reference number

Example: **SS 30 1000 AL C 2 - * PC Z**

- Series name
- Size
- Rail length (mm)
- Ball slide shape/height
- Material/surface treatment
  - C: Special carbon steel (NSK standard)
  - K: Stainless steel
- Number of ball slides per rail
- Design serial number
- Accuracy grade
- Preload

Front view of AL and CL types

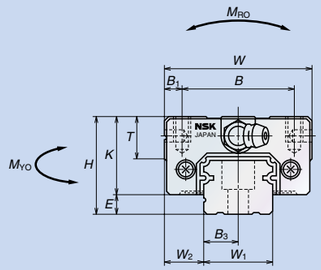

Side view of AL type

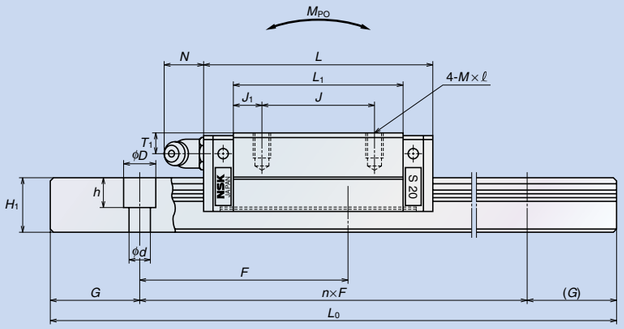

Side view of CL type

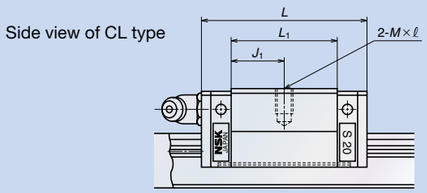

Reference number for rail of interchangeable types

For regular rails (non-jointed rail)

Example: **L 1 S 15 1000 T S Z**

- Interchangeable rail
- Series name
- Size
- Rail length (mm)
- Applicable only to L1S15 (no code for other sizes)
  - T: With M4-bolt holes for rail mounting
  - No code: With M3-bolt holes for rail mounting
- S: Stainless steel
  - No code: Special carbon steel (NSK standard)
- Z: Preload

For more details regarding joint rails, please contact us.

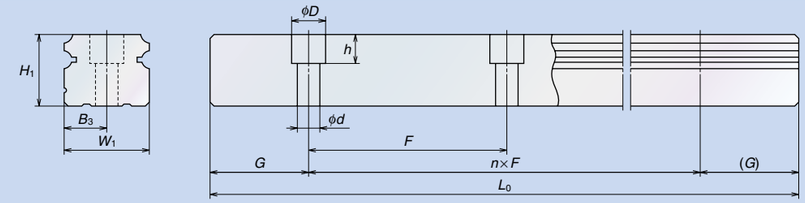

Reference number for ball slide of interchangeable types

Example: **S A S 30 AL S Z**

- Interchangeable bearing
- Series name
- Size
- Preload Z: Slight preload
- S: Stainless steel
  - No code: Special carbon steel (NSK standard)
- Ball slide shape/height

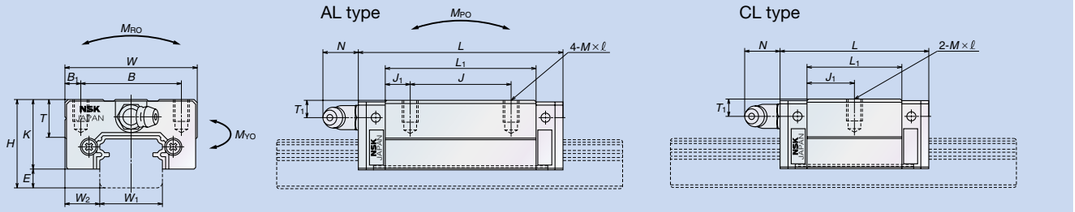

Model No.		Assembly			Ball slide										Rail							Basic load rating					Ball diameter	Weight	
		Height			Width	Length	Mounting tap hole							Grease fitting			Width	Height	Pitch	Mounting bolt hole			Max. length	Dynamic	Static	Static moment				Ball slide	Rail
		H	E	W_2	W	L	B	J	M×pitch×ℓ	B_1	L_1	J_1	K	T	Hole size	T_1	N	W_1	H_1	F	d×D×h	B_3	G (recommended)	L_{omax} ( ) for stainless	C (N)	C_0 (N)	M_{RO} (N•m)	M_{PO} (N•m)	M_{YO} (N•m)	D_W		
SS15CL	SAS15CL	24	4.6	9.5	34	40.4	26	—	M4×0.7×6	4	23.6	11.8	19.4	10	ø3	6	3	15	12.5	60	* 3.5×6×4.5	7.5	20	2 000	4 150	7 250	39	20	20	2.778	0.14	1.4
SS15AL	SAS15AL					56.8		26			40	7									4.5×7.5×5.3			(1 700)	6 350	11 400	69	49	49		0.2	
SS20CL	SAS20CL	28	6	11	42	47.2	32	—	M5×0.8×7	5	30	15	22	12	M6×0.75	5.5	11	20	15.5	60	6×9.5×8.5	10	20	3 960	6 050	10 700	69	29	29	3.175	0.19	2.3
SS20AL	SAS20AL					65.2		32			48	8												(3 500)	8 500	16 100	118	88	88		0.28	
SS25CL	SAS25CL	33	7	12.5	48	59.6	35	—	M6×1×9	6.5	38	19	26	12	M6×0.75	7	11	23	18	60	7×11×9	11.5	20	3 960	9 750	16 600	127	59	59	3.968	0.34	3.1
SS25AL	SAS25AL					81.6		35			60	12.5												(3 500)	13 700	27 000	235	196	186		0.51	
SS30CL	SAS30CL	42	9	16	60	67.4	40	—	M8×1.25×12	10	42	21	33	13	M6×0.75	8	11	28	23	80	7×11×9	14	20	4 000	14 500	22 900	216	98	98	4.762	0.58	4.8
SS30AL	SAS30AL					96.4		40			71	15.5												(3 500)	22 300	39 200	441	323	323		0.85	
SS35CL	SAS35CL	48	10.5	18	70	77	50	—	M8×1.25×12	10	49	24.5	37.5	14	M6×0.75	8.5	11	34	27.5	80	9×14×12	17	20	4 000	20 200	31 400	362	139	139	5.556	0.86	7
SS35AL	SAS35AL					108		50			80	15												(3 500)	31 000	53 800	724	492	487		1.3	

* SS15 mounting bolt hole is applicable to M3 (3.5×6×4.5) and M4 (4.5×7.5×5.3).

www.bergab.ru Берг АБ bergab@ya.ru Тел. (495)-228-06-21, факс (495) 223-3071

SS-EL (High load type) / **SS-JL** (Medium load type)

Reference number

Example: SS 30 1000 EL C 2 - * PC Z

- SS: Series name
- 30: Size
- 1000: Rail length (mm)
- EL: Ball slide shape/height
- C: Material/surface treatment — C: Special carbon steel (NSK standard); K: Stainless steel
- 2: Number of ball slides per rail
- *: Design serial number
- PC: Accuracy grade
- Z: Preload

Front view of EL and JL types

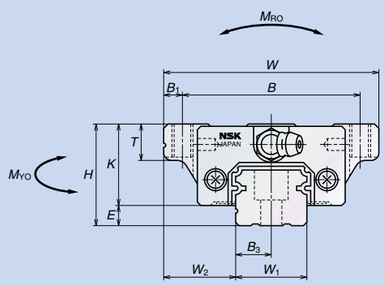

Side view of EL type

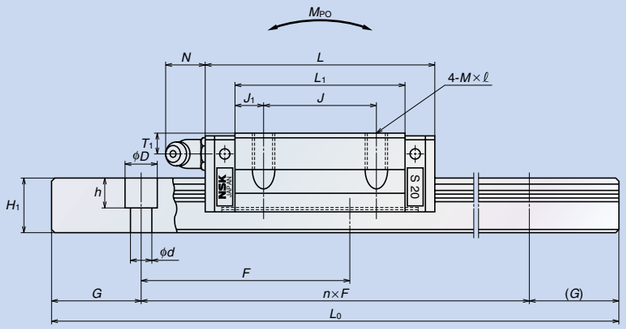

Side view of JL type

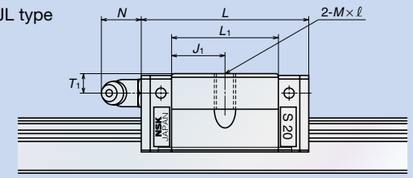

Reference number for rail of interchangeable types

For regular rails (non-jointed rail)

Example: L 1 S 15 1000 T S Z

- L1: Interchangeable rail
- S15: Series name
- 15: Size
- 1000: Rail length (mm)
- T: Applicable only to L1S15 (no code for other sizes); T: With M4-bolt holes for rail mounting; No code: With M3-bolt holes for rail mounting
- S: Stainless steel; No code: Special carbon steel (NSK standard)
- Z: Preload

For more details regarding joint rails, please contact us.

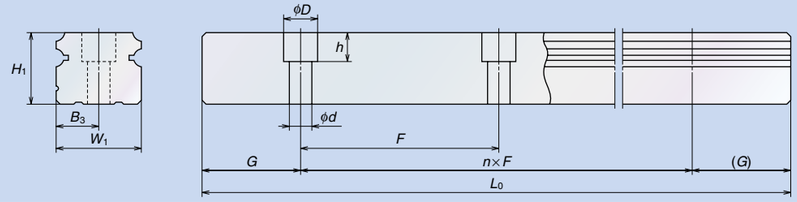

Reference number for ball slide of interchangeable types

Example: S A S 30 EL S Z

- SAS: Interchangeable bearing
- S15: Series name
- 15: Size
- EL: Ball slide shape/height
- S: Stainless steel; No code: Special carbon steel (NSK standard)
- Z: Preload Z: Slight preload

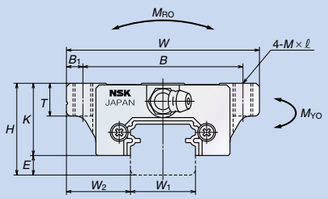

EL type

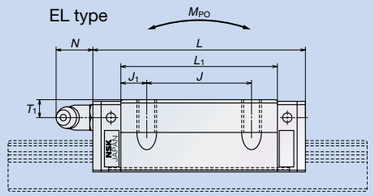

Model No.	Assembly			Ball slide										Rail							Basic load rating					Ball diameter	Weight	
	Height			Width	Length	Mounting tap hole							Grease fitting			Width	Height	Pitch	Mounting bolt hole			Max. length	Dynamic	Static	Static moment				Ball slide	Rail
	H	E	W_2	W	L	B	J	M×pitch×ℓ	B_1	L_1	J_1	K	T	Hole size	T_1	N	W_1	H_1	F	d×D×h	B_3	G (recommended)	L_{omax} ( )for stainless	C (N)	C_0 (N)	M_{RO} (N•m)	M_{PO} (N•m)	M_{YO} (N•m)	D_W	(kg)	(kg/m)
SS15JL	24	4.6	18.5	52	40.4	41	—	M5×0.8×6	5.5	23.6	11.8	19.4	8	ø3	6	3	15	12.5	60	*3.5×6×4.5	7.5	20	2 000	4 150	7 250	39	20	20	2.778	0.17	1.4
SS15EL SAS15EL					56.8		26			40	7									4.5×7.5×5.3			(1 700)	6 350	11 400	69	49	49		0.26	
SS20JL	28	6	19.5	59	47.2	49	—	M6×1×10	5	30	15	22	10	M6×0.75	5.5	11	20	15.5	60	6×9.5×8.5	10	20	3 960	6 050	10 700	69	29	29	3.175	0.24	2.3
SS20EL SAS20EL					65.2		32			48	8												(3 500)	8 500	16 100	118	88	88		0.35	
SS25JL	33	7	25	73	59.6	60	—	M8×1.25×12	6.5	38	19	26	11	M6×0.75	7	11	23	18	60	7×11×9	11.5	20	3 960	9 750	16 600	127	59	59	3.968	0.44	3.1
SS25EL SAS25EL					81.6		35			60	12.5		(12)										(3 500)	13 700	27 000	235	196	186		0.66	
SS30JL	42	9	31	90	67.4	72	—	M10×1.5×18	9	42	21	33	11	M6×0.75	8	11	28	23	80	7×11×9	14	20	4 000	14 500	22 900	216	98	98	4.762	0.76	4.8
SS30EL SAS30EL					96.4		40	(M10×1.5×15)		71	15.5		(15)										(3 500)	22 300	39 200	441	323	323		1.2	
SS35JL	48	10.5	33	100	77	82	—	M10×1.5×20	9	49	24.5	37.5	12	M6×0.75	8.5	11	34	27.5	80	9×14×12	17	20	4 000	20 200	31 400	362	139	139	5.556	1.2	7
SS35EL SAS35EL					108		50	(M10×1.5×15)		80	15		(15)										(3 500)	31 000	53 800	724	492	487		1.7	

* SS15 mounting bolt hole is applicable to M3 (3.5×6×4.5) and M4 (4.5×7.5×5.3).

Dimensions in ( ) are applicable to stainless steel products.

www.bergab.ru Берг АБ bergab@ya.ru Тел. (495)-228-06-21, факс (495) 223-3071

SS-FL (High load type) / **SS-KL** (Medium load type)

Reference number

Example: SS 30 1000 FL C 2 - * PC Z

- Series name: SS
- Size: 30
- Rail length (mm): 1000
- Ball slide shape/height: FL
- Material/surface treatment: C
  - C: Special carbon steel (NSK standard)
  - K: Stainless steel
- Number of ball slides per rail: 2
- Design serial number: *
- Accuracy grade: PC
- Preload: Z

Front view of FL and KL types

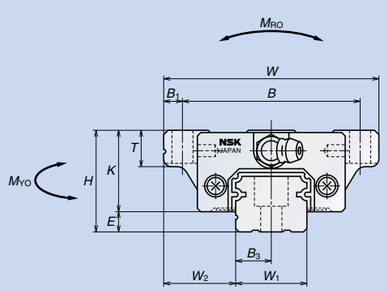

Side view of FL type

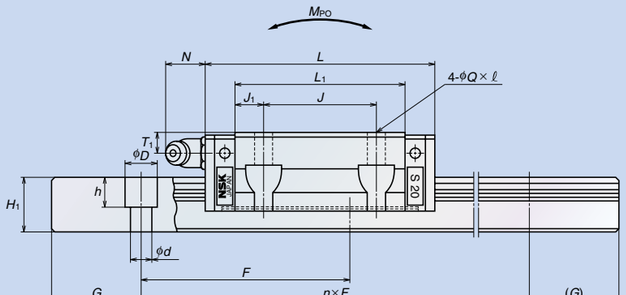

Side view of KL type

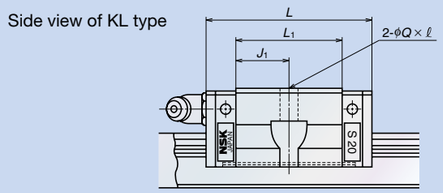

Reference number for rail of interchangeable types

For regular rails (non-jointed rail)

Example: L 1 S 15 1000 T S Z

- Interchangeable rail: L
- Series name: 1
- Size: S
- Rail length (mm): 15 1000
- Applicable only to L1S15 (no code for other sizes)
  - T: With M4-bolt holes for rail mounting
  - No code: With M3-bolt holes for rail mounting
- Material/surface treatment
  - S: Stainless steel
  - No code: Special carbon steel (NSK standard)
- Preload: Z

For more details regarding joint rails, please contact us.

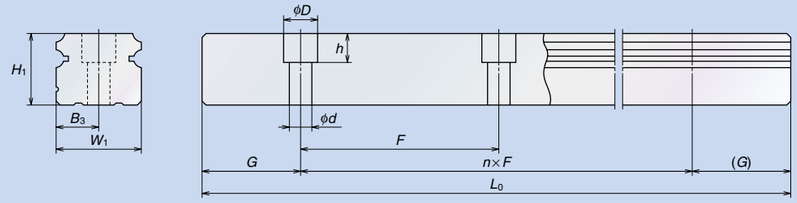

Reference number for ball slide of interchangeable types

Example: S A S 30 FL S Z

- Interchangeable bearing: S
- Series name: A
- Size: S
- Ball slide shape/height: 30 FL
- Material/surface treatment
  - S: Stainless steel
  - No code: Special carbon steel (NSK standard)
- Preload Z: Slight preload

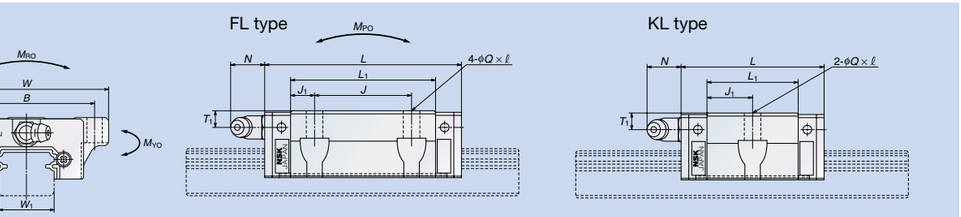

Model No.		Assembly			Ball slide									Grease fitting			Rail						Basic load rating					Ball diameter	Weight	
		Height			Width	Length	Mounting tap hole										Width	Height	Pitch	Mounting bolt hole		G	Max. length	Dynamic	Static	Static moment				Ball slide	Rail
		H	E	W_2	W	L	B	J	$Q\times\ell$	B_1	L_1	J_1	K	T	Hole size	T_1	N	W_1	H_1	F	$d\times D\times h$	B_3	(recommended)	L_{omax} ( )for stainless	C (N)	C_0 (N)	M_{RO} (N•m)	M_{PO} (N•m)	M_{YO} (N•m)	D_W	(kg)	(kg/m)
SS15KL	SAS15KL	24	4.6	18.5	52	40.4	41	—	4.5×7	5.5	23.6	11.8	19.4	8	ø3	6	3	15	12.5	60	*3.5×6×4.5	7.5	20	2 000	4 150	7 250	39	20	20	2.778	0.17	1.4
SS15FL	SAS15FL					56.8		26			40	7									4.5×7.5×5.3			(1 700)	6 350	11 400	69	49	49		0.26	
SS20KL	SAS20KL	28	6	19.5	59	47.2	49	—	5.5×9	5	30	15	22	10	M6×0.75	5.5	11	20	15.5	60	6×9.5×8.5	10	20	3 960	6 050	10 700	69	29	29	3.175	0.24	2.3
SS20FL	SAS20FL					65.2		32	(5.5×9.5)		48	8												(3 500)	8 500	16 100	118	88	88		0.35	
SS25KL	SAS25KL	33	7	25	73	59.6	60	—	7×10	6.5	38	19	26	11	M6×0.75	7	11	23	18	60	7×11×9	11.5	20	3 960	9 750	16 600	127	59	59	3.968	0.44	3.1
SS25FL	SAS25FL					81.6		35	(7×11.5)		60	12.5		(12)										(3 500)	13 700	27 000	235	196	186		0.66	
SS30KL	SAS30KL	42	9	31	90	67.4	72	—	9×12	9	42	21	33	11	M6×0.75	8	11	28	23	80	7×11×9	14	20	4 000	14 500	22 900	216	98	98	4.762	0.76	4.8
SS30FL	SAS30FL					96.4		40	(9×14.5)		71	15.5		(15)										(3 500)	22 300	39 200	441	323	323		1.2	
SS35KL	SAS35KL	48	10.5	33	100	77	82	—	9×13	9	49	24.5	37.5	12	M6×0.75	8.5	11	34	27.5	80	9×14×12	17	20	4 000	20 200	31 400	362	139	139	5.556	1.2	7
SS35FL	SAS35FL					108		50	(9×14.5)		80	15		(15)										(3 500)	31 000	53 800	724	492	487		1.7	

* SS15 mounting bolt hole is applicable to M3 (3.5×6×4.5) and M4 (4.5×7.5×5.3).

Dimensions in ( ) are applicable to stainless steel products.

www.bergab.ru Берг АБ bergab@ya.ru Тел. (495)-228-06-21, факс (495) 223-3071