CONTENTS

Trapezoidal rolled threaded bars RPTS of steel C35E / C45E according to ISO 2901/2903 and DIN 103 tolerance 7e.

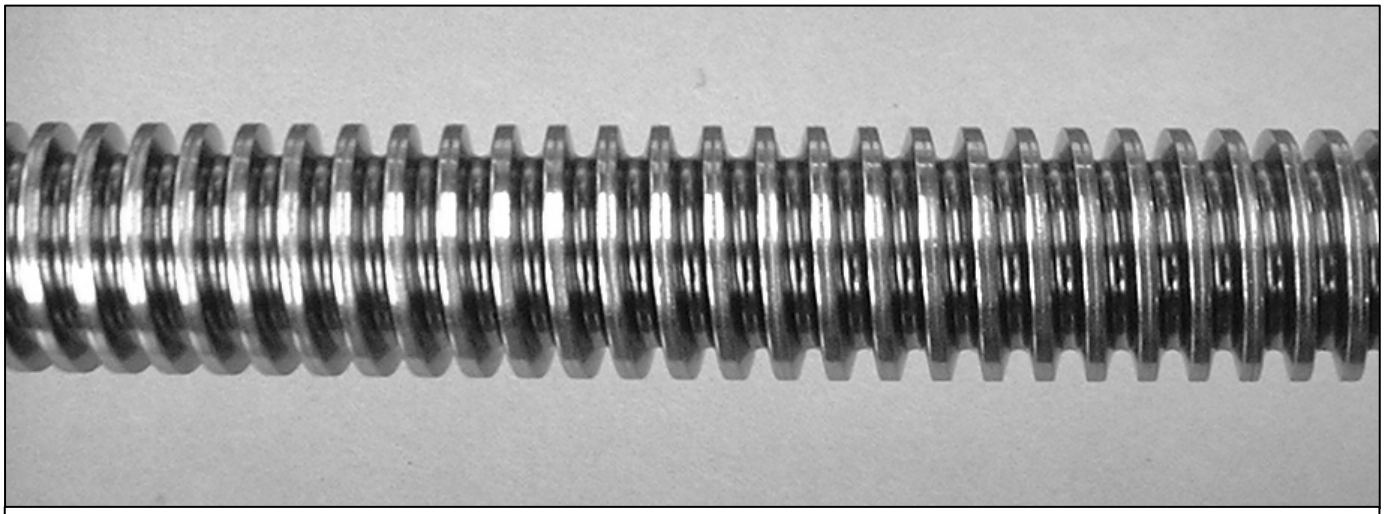

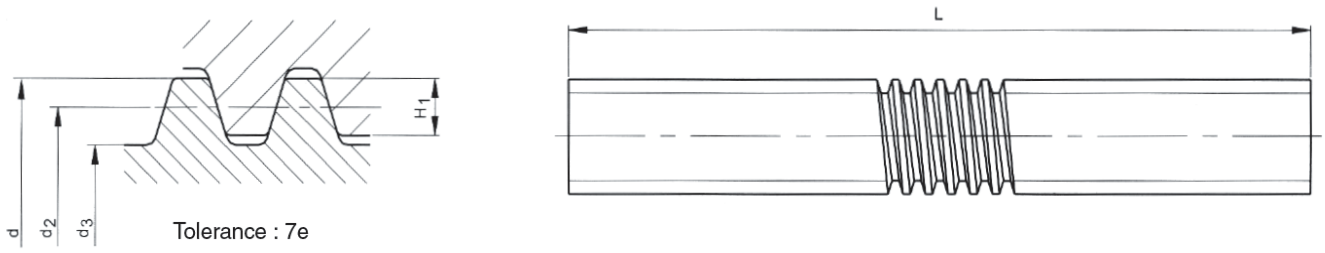

These **precision threaded bars** are for mechanical applications for transmission.

They are made of C35E/C45E which makes it possible to obtain better performances in use and also better machining conditions.

Type of thread: Trapezoidal thread obtained by rolling according to ISO 2901/2903 and DIN 103 tolerance 7e.

All these products are available in lengths of 1000 mm or 3000 mm up to Ø 28 inclusive and in lengths of 1000 mm, 3000 mm, 6000 mm beyond.

On request we can supply bars cut to length and also machined according to your drawings.

Our bars are carefully packed in wooden boxes to protect them during transport and thus preserve their quality.

Trapezoidal rolled threaded bars RPTS of steel C35E / C45E according to ISO 2901/2903 and DIN 103 tolerance 7e.

Reference	Tolerance 7e						Pitch	Straightness	Lead	Weight
	d maxi	d mini	d2 maxi	d2 mini	d3 maxi	d3 mini	accuracy	mm	angle	/ m
	mm	mm	mm	mm	mm	mm	µ/300mm	/300mm		(Kg)
RPTS TR10x2*	10	9.820	8.929	8.739	7.500	6.891	200	0.5	4°07'	0 .482
RPTS TR10x4-P2	10	9.820	8.929	8.716	7.500	6.891	300	0.5	8°12 '	0.482
RPTS TR12x3*	12	11.764	10.415	10.191	8.500	7.685	200	0.5	5°1 7'	0.653
RPTS TR12x6-P3	12	11.764	10.415	10.164	8.500	7.685	300	0.5	10°30'	0.653
RPTS TR14x3*	14	13.764	12.415	12.191	10.500	9.685	200	0.5	4°26'	0.932
RPTS TR14x6-P3	14	13.764	12.415	12.164	10.500	9.685	300	0.5	8°49'	0.932
RPTS TR16x4*	16	15.700	13.905	13.640	11.500	10.474	50	0.5	5°16'	1.173
RPTS TR16x8-P4	16	15.700	13.905	13.608	11.500	10.474	100	0.5	10°29'	1.173
RPTS TR18x4*	18	17.700	15.905	15.640	13.500	12.474	50	0.5	4°36'	1.528
RPTS TR18x8-P4	18	17.700	15.905	15.608	13.500	12.474	100	0.5	9°20'	1.528
RPTS TR20x4*	20	19.700	17.905	17.640	15.500	14.474	50	0.5	4°05'	1.940
RPTS TR20x8-P4	20	19.700	17.905	17.608	15.500	14.474	100	0.5	8°09'	1.940
RPTS TR22x5*	22	21.665	19.394	19.114	16.500	15.294	50	0.2	4°43'	2.294
RPTS TR22x10-P5	22	21.665	19.394	19.058	16.500	15.294	200	0.3	9°23'	2.294
RPTS TR24x5*	24	23.665	21.394	21.094	18.500	17.269	50	0.2	4°17'	2.781
RPTS TR24x10-P5	24	23.665	21.394	21.058	18.500	17.269	200	0.3	8°31'	2.781
RPTS TR26x5*	26	25.665	23.394	23.094	20.500	19.269	50	0.2	3°55'	3.329
RPTS TR26x10-P5	26	25.665	23.394	23.058	20.500	19.269	200	0.3	7°48'	3.329
RPTS TR28x5*	28	27.665	25.394	25.094	22.500	21.269	50	0.2	3°36'	3.905
RPTS TR28x10-P5	28	27.665	25.394	25.058	22.500	21.269	200	0.3	7°12'	3.905
RPTS TR30x6*	30	29.625	26.882	26.547	23.000	21.563	70	0.2	4°05'	4.358
RPTS TR30x12-P6	30	29.625	26.882	26.507	23.000	21.563	200	0.3	8°08'	4.358
RPTS TR32x6*	32	31.625	28.882	28.547	25.000	23.563	70	0.2	3°48'	5.038
RPTS TR32x12-P6	32	31.625	28.882	28.507	25.000	23.563	200	0.3	7°34'	5.038
RPTS TR36x6*	36	35.625	32.882	32.547	29.000	27.563	70	0.2	3°20'	6.546
RPTS TR36x12-P6	36	35.625	32.882	32.507	29.000	27.563	200	0.3	6°39'	6.546
RPTS TR40x7*	40	39.575	36.375	36.020	32.000	30.381	80	0.2	3°31'	7.983
RPTS TR40x14-P7	40	39.575	36.375	35.977	32.000	30.381	200	0.3	7°01'	7.983
RPTS TR44x7*	44	43.575	40.375	40.020	36.000	34.381	80	0.2	3°10'	9.856
RPTS TR44x14-P7	44	43.575	40.375	39.977	36.000	34.381	200	0.3	6°20'	9.856
RPTS TR50x8*	50	49.550	45.868	45.468	41.000	39.168	100	0.2	3°11'	12.696
RPTS TR55x9	55	54.500	50.360	49.935	45.000	42.979	100	0.2	3°16'	15.400
RPTS TR60x9*	60	59.470	55.360	54.935	50.000	47.979	100	0.2	2°58'	18.498
RPTS TR70x10*	70	69.470	64.850	64.425	59.000	56.819	100	0.4	2°49'	25.627
RPTS TR80x10*	80	79.470	74.850	74.425	69.000	66.819	100	0.4	2°27'	34.189
RPTS TR90x12	90	89.400	83.840	83.365	77.000	74.446	200	0.5	2°36'	43.000
RPTS TR95x16	95	94.290	86.810	86.250	77.000	73.710	200	1	3°2 2'	45.600
RPTS TR100x16	100	99.290	91.810	91.250	82.000	78.710	200	1	3°11'	51.000
RPTS TR120x16	120	119.290	111.810	111.250	102.000	98.710	200	1	2°36'	76.000

*Available in left-hand

Trapezoidal rolled threaded bars RTS of steel C15E according to ISO 2901/2903 and DIN 103 tolerance 7e.

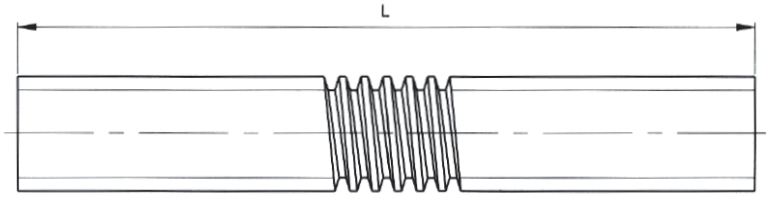

Reference	Tolerance 7e d maxi mm	d mini mm	d2 maxi mm	d2 mini mm	d3 maxi mm	d3 mini mm	Pitch accuracy µ/300mm	Straightness mm /300mm	Lead angle	Weight / m (Kg)
RTS TR10x2	10.000	9.820	8.929	8.739	7.500	6.891	300	1.5	4°07 '	0.482
RTS TR12x3	12.000	11.764	10.415	10.191	8.500	7.685	300	1.5	5°17'	0.653
RTS TR14x3	14.000	13.764	12.415	12.191	10.500	9.685	300	1.5	4°26'	0.932
RTS TR16x4	16.000	15.700	13.905	13.640	11.500	10.474	300	1.5	5°16'	1.173
RTS TR18x4	18.000	17.700	15.905	15.640	13.500	12.474	300	1.5	4°36'	1.528
RTS TR20x4	20.000	19.700	17.905	17.640	15.500	14.474	300	1.5	4°05'	1.940
RTS TR22x5	22.000	21.665	19.394	19.114	16.500	15.294	300	1.5	4°43'	2.294
RTS TR24x5	24.000	23.665	21.394	21.094	18.500	17.269	300	1.5	4°17'	2.781
RTS TR26x5	26.000	25.665	23.394	23.094	20.500	19.269	300	1.5	3°55'	3.329
RTS TR28x5	28.000	27.665	25.394	25.094	22.500	21.269	300	1.5	3°36'	3.905
RTS TR30x6	30.000	29.625	26.882	26.547	23.000	21.563	300	1.5	4°05'	4.358
RTS TR32x6	32.000	31.625	28.882	28.547	25.000	23.563	300	1.5	3°48'	5.038
RTS TR36x6	36.000	35.625	32.882	32.547	29.000	27.563	300	1.5	3°20'	6.546
RTS TR40x7	40.000	39.575	36.375	36.020	32.000	30.381	300	1.5	3°31'	7.983

These current quality threaded bars are for simple applications.

They are made of C15E which allows welding and crimping.

Type of thread: Trapezoidal thread obtained by **rolling** according to ISO 2901/2903 and DIN 103.

All these products are available in lengths of 1000 mm and 3000 mm.

On request we can supply bars cut to length and also machined according to your drawings.

Our bars are carefully packed in wooden boxes to protect them during transport and thus preserve their quality.

Trapezoidal rolled threaded bars RATS of stainless steel X2CrNiMo17.12.2 according to ISO 2901/2903 and DIN 103 tolerance 7e.

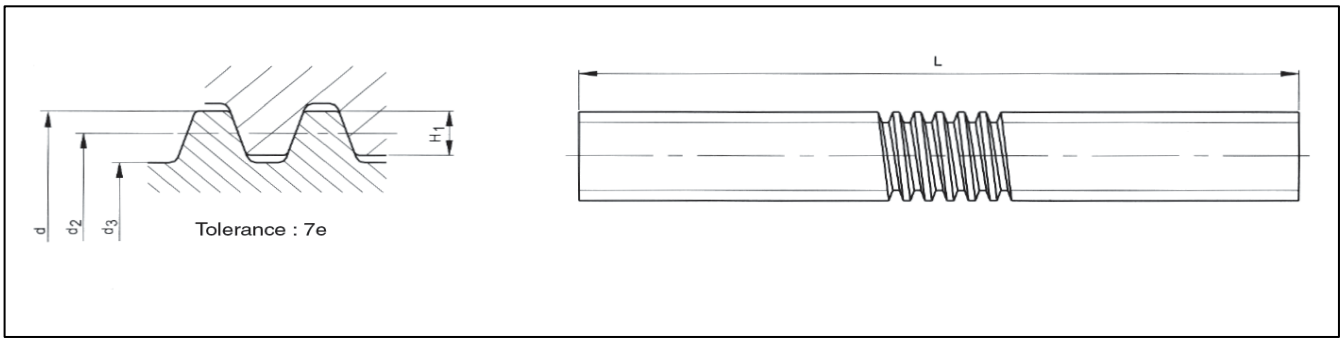

Reference	Tolerance 7e						Pitch	Straightness	Lead	Weight
	d maxi	d mini	d2 maxi	d2 mini	d3 maxi	d3 mini	accuracy	mm	angle	/ m
	mm	mm	mm	mm	mm	mm	µ/300mm	/300mm		(Kg)
RATS TR10x2	10.000	9.820	8.929	8.739	7.500	6.891	300	1.5	4°0 7'	0.482
RATS TR12x3*	12.000	11.764	10.415	10.191	8.500	7.685	300	1.5	5°17'	0.653
RATS TR14x3	14.000	13.764	12.415	12.191	10.500	9.685	300	1.5	4°26'	0.932
RATS TR16x4*	16.000	15.700	13.905	13.640	11.500	10.474	100	1.5	5°16'	1.173
RATS TR18x4	18.000	17.700	15.905	15.640	13.500	12.474	100	1.5	4°36'	1.528
RATS TR20x4*	20.000	19.700	17.905	17.640	15.500	14.474	100	1.5	4°05'	1.940
RATS TR22x5	22.000	21.665	19.394	19.114	16.500	15.294	100	1.5	4°43'	2.294
RATS TR24x5*	24.000	23.665	21.394	21.094	18.500	17.269	100	1.5	4°17'	2.781
RATS TR26x5	26.000	25.665	23.394	23.094	20.500	19.269	100	1.5	3°55'	3.329
RATS TR28x5	28.000	27.665	25.394	25.094	22.500	21.269	100	1.5	3°36'	3.905
RATS TR30x6*	30.000	29.625	26.882	26.547	23.000	21.563	100	1.5	4°05'	4.358
RATS TR32x6*	32.000	31.625	28.882	28.547	25.000	23.563	100	1.5	3°48'	5.038
RATS TR36x6*	36.000	35.625	32.882	32.547	29.000	27.563	100	1.5	3°20'	6.546
RATS TR40x7*	40.000	39.575	36.375	36.020	32.000	30.381	150	1.5	3°31'	7.983
RATS TR50x8*	50.000	49.550	45.868	45.468	41.000	39.168	150	2	3°11'	12.696
RATS TR60x9*	60.000	59.470	55.360	54.935	50.000	47.979	150	2	2°58'	18.498
RATS TR70x10*	70.000	69.470	64.850	64.425	59.000	56.819	150	2	2°49'	25.627

*Available in left-hand

These threaded bars are obtained by **rolling** and are meant to be used in wet or corrosive environment.

They are made of X2CrNiMo17.12.2 which ensures their resistance to nearly all types of corrosion.

Type of thread: Trapezoidal thread obtained by **rolling** according to ISO 2901/2903 and DIN 103.

All these products are available in lengths of 1000 mm or 3000 mm up to Ø 28 inclusive and in lengths of 1000 mm, 3000 mm, 6000 mm beyond.

On request we can supply bars cut to length and also machined according to your drawings.

Our bars are carefully packed in wooden boxes to protect them during transport and thus preserve their quality.

Trapezoidal cylindrical machined nuts LRM of bronze CC493K (CuSn7ZnPb) according to ISO 2901/2903 and DIN 103 tolerance 7H.

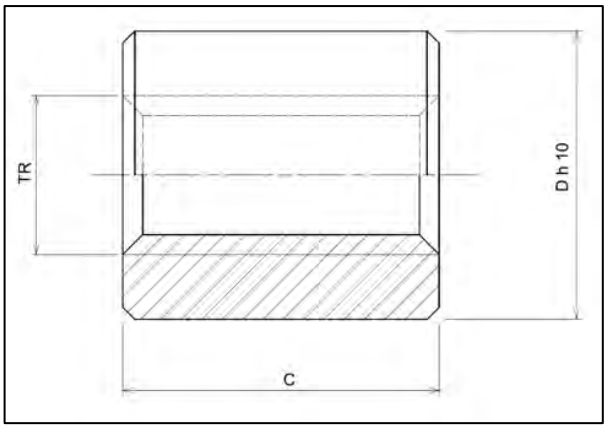

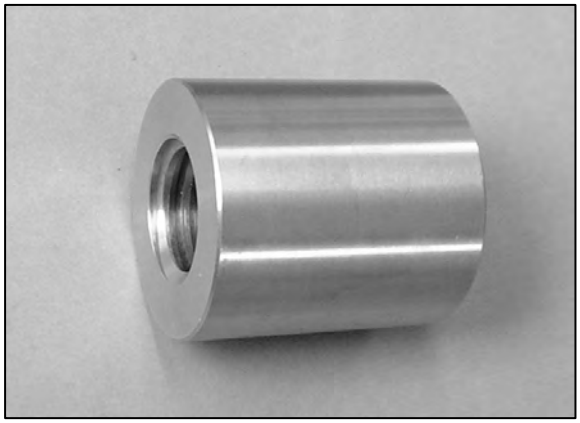

Use:
-For manual or powered control.
-For low and medium rotation speeds.
-For working under load.

The use with steel or stainless steel screws gives good results, especially if lubrication is correctly ensured.

SINGLE START

Reference	D	C	Contact surface	Weight
	mm	mm	mm²	Kg
ELRM10x2D/G	22	20	200	0.053
ELRM12x3D/G	26	24	280	0.083
ELRM14x3D/G	30	28	380	0.135
ELRM16x4D/G	36	32	490	0.232
ELRM18x4D/G	40	36	630	0.320
ELRM20x4D/G	45	40	790	0.455
ELRM22x5D/G	45	44	940	0.480
ELRM24x5D/G	50	48	1130	0.656
ELRM26x5D/G	50	52	1340	0.670
ELRM28x5D/G	60	56	1570	1.102
ELRM30x6D/G	60	60	1780	1.140
ELRM32x6D/G	60	64	1910	1.177
ELRM36x6D/G	75	72	2610	2.189
ELRM40x7D/G	80	80	3210	2.725
ELRM44x7D/G	80	88	3920	2.815
ELRM50x8D/G	90	100	5060	4.014
ELRM60x9D/G	100	120	7320	5.150
ELRM70x10D/G	110	140	10000	7.805
ELRM80x10D/G	120	160	12950	9.800

TWO STARTS

Reference	D	C	Contact surface	Weight
	mm	mm	mm²	Kg
ELRM10x4P2D*	22	20	200	0.053
ELRM12x6P3D	26	24	280	0.083
ELRM14x6P3D	30	28	380	0.135
ELRM16x8P4D	36	32	490	0.232
ELRM18x8P4D	40	36	630	0.320
ELRM20x8P4D	45	40	790	0.455
ELRM22x10P5D	45	44	940	0.480
ELRM24x10P5D	50	48	1130	0.656
ELRM26x10P5D*	50	52	1340	0.670
ELRM28x10P5D	60	56	1570	1.102
ELRM30x12P6D	60	60	1780	1.140
ELRM32x12P6D	60	64	1910	1.177
ELRM36x12P6D	75	72	2610	2.189
ELRM40x14P7D	80	80	3210	2.725

D = right-hand thread
G = left-hand thread
* = available in 8 days

Trapezoidal flanged machined nuts BFM of bronze CC493K (CuSn7ZnPb) according to ISO 2901/2903 and DIN 103 tolerance 7H.

Use:

-For manual or powered control.

-For low and medium rotation speeds.

-For working under load.

The use with steel or stainless steel screws gives good results, especially if lubrication is correctly ensured.

SINGLE START

Reference	D1	D4	D5	D6*	L1	L2	L3	Contact surface	Weight
	mm	mm	mm	mm	mm	mm	mm	mm²	Kg
EBFM10x2D/G	25	42	34	5*M4	25	10	6	250	0.016
EBFM12x3D/G	28	48	38	6*M5	35	12	8	400	0.266
EBFM14x3D/G	28	48	38	6*M5	35	12	8	460	0.258
EBFM16x4D/G	28	48	38	6*M5	35	12	8	530	0.244
EBFM18x4D/G	28	48	38	6*M5	35	12	8	610	0.228
EBFM20x4D/G	32	55	45	7*M6	44	12	8	870	0.346
EBFM22x5D/G	32	55	45	7*M6	44	12	8	1030	0.322
EBFM24x5D/G	32	55	45	7*M6	44	12	8	1040	0.304
EBFM26x5D/G	38	62	50	7*M6	46	14	8	1280	0.474
EBFM28x5D/G	38	62	50	7*M6	46	14	8	1200	0.442
EBFM30x6D/G	38	62	50	7*M6	46	14	8	1370	0.408
EBFM32x6D/G	45	70	58	7*M6	54	16	10	1710	0.706
EBFM36x6D/G	45	70	58	7*M6	54	16	10	1950	0.606
EBFM40x7D/G	63	95	78	9*M8	66	16	12	2650	1.700
EBFM44x7D/G	63	95	78	9*M8	66	16	12	2940	1.524
EBFM50x8D/G	72	110	90	11*M10	75	18	14	4540	2.324
EBFM60x9D/G	88	130	110	11*M12	90	20	16	5490	3.942
EBFM70x10D/G	95	140	120	11*M12	105	22	18	7500	4.465
EBFM80x10D/G	105	150	130	11*M12	120	24	20	9710	6.150

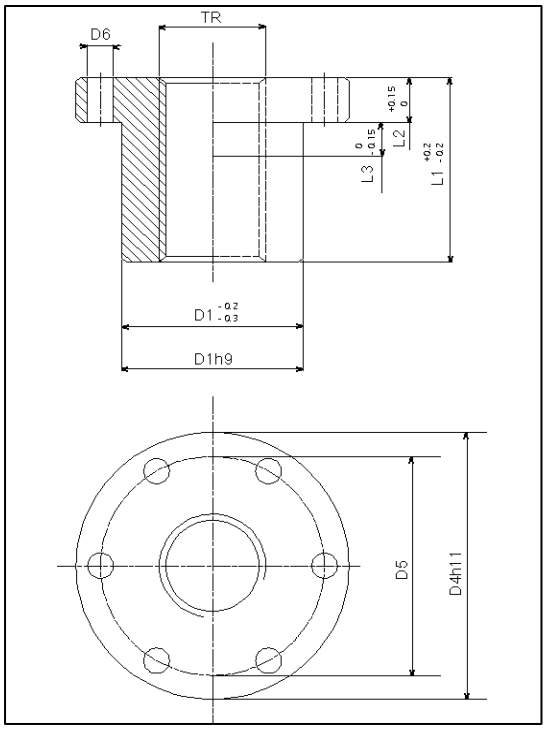

TWO STARTS

Reference	D1	D4	D5	D6*	L1	L2	L3	Contact surface	Weight
	mm	mm	mm	mm	mm	mm	mm	mm²	Kg
EBFM10x4P2D*	25	42	34	5*M5	25	10	6	250	0.016
EBFM12x6P3D	28	48	38	6*M5	35	12	8	400	0.266
EBFM14x6P3D	28	48	38	6*M5	35	12	8	460	0.258
EBFM16x8P4D	28	48	38	6*M5	35	12	8	530	0.244
EBFM18x8P4D	28	48	38	6*M5	35	12	8	610	0.228
EBFM20x8P4D	32	55	45	7*M6	44	12	8	870	0.346
EBFM22x10P5D	32	55	45	7*M6	44	12	8	1030	0.322
EBFM24x10P5D	32	55	45	7*M6	44	12	8	1040	0.304
EBFM26x10P5D*	32	62	50	7*M6	46	14	8	1280	0.474
EBFM28x10P5D	38	62	50	7*M6	46	14	8	1200	0.442
EBFM30x12P6D	38	62	50	7*M6	46	14	8	1370	0.408
EBFM32x12P6D	45	70	58	7*M6	54	16	10	1710	0.706
EBFM36x12P6D	45	70	58	7*M6	54	16	10	1950	0.606
EBFM40x14P7D	63	95	78	9*M8	66	16	12	2650	1.700

D=right-hand thread G=left-hand thread *=available in 8 days

Trapezoidal flanged machined nuts FMR of bronze CC493K (CuSn7ZnPb) according to ISO 2901/2903 and DIN 103 tolerance 7H.

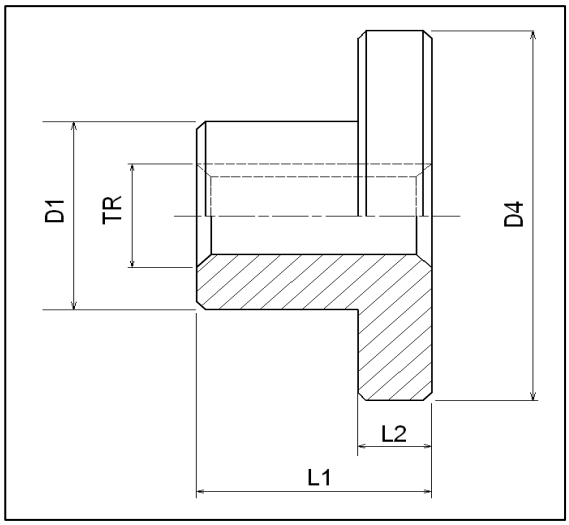

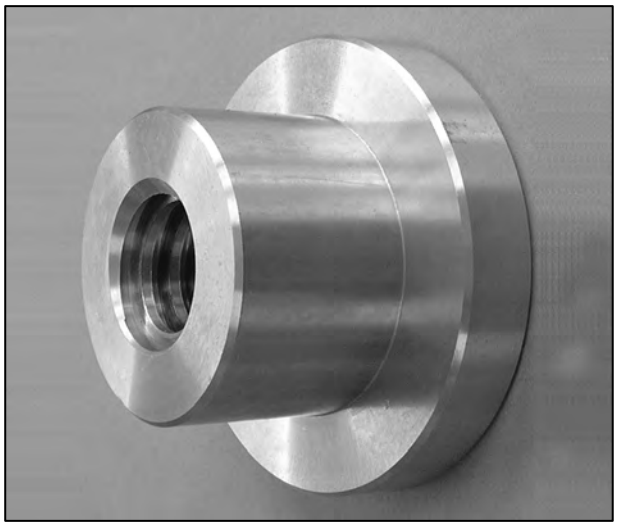

Use:
-For manual or powered control.
-For low and medium rotation speeds.
-For working under load.

The use with steel or stainless steel screws gives good results, especially if lubrication is correctly ensured.

SINGLE START

Reference	D1	D4	L1	L2	Contact surface	Weight
	mm	mm	mm	mm	mm²	Kg
EFMR10x2D/G	20	35	15	6	150	0.068
EFMR12x3D/G	24	42	20	7	228	0.120
EFMR14x3D/G	30	52	24	10	315	0.260
EFMR16x4D/G	30	52	24	10	363	0.250
EFMR20x4D/G	38	62	26	11	514	0.400
EFMR24x5D/G	50	77	33	13	780	0.750
EFMR30x6D/G	58	90	48	15	1430	1.400
EFMR36x6D/G	80	115	60	20	2166	3.200
EFMR40x7D/G	80	140	65	20	2610	4.100
EFMR50x8D/G	90	170	70	20	4237	5.900

TWO STARTS

Reference	D1	D4	L1	L2	Contact surface	Weight
	mm	mm	mm	mm	mm²	Kg
EFMR10x4P2D*	20	35	15	6	150	0.068
EFMR12x6P3D	24	42	20	7	262	0.120
EFMR16x8P4D	30	52	24	12	363	0.250
EFMR20x8P4D	38	62	26	12	514	0.400
EFMR24x10P5D	50	77	33	12	780	0.750
EFMR30x12P6D	58	90	48	14	1430	1.400
EFMR36x12P6D	80	115	60	16	2166	3.200
EFMR40x14P7D	80	140	65	16	2610	4.100

D = right-hand thread G = left-hand thread

* = available in 8 days

Trapezoidal cylindrical machined nuts LKM of Nylon PA 6.6 according to ISO 2901/2903 and DIN 103 tolerance 7H.

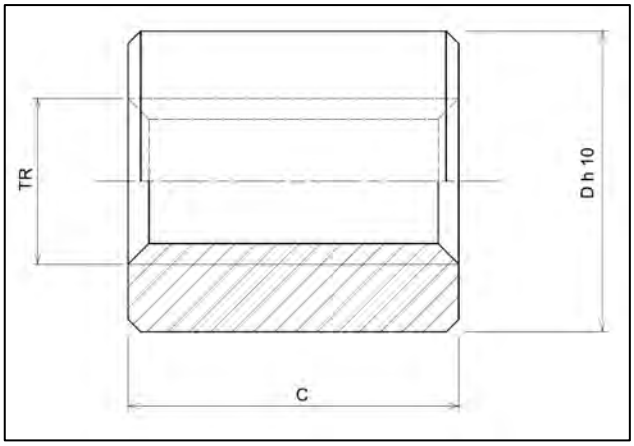

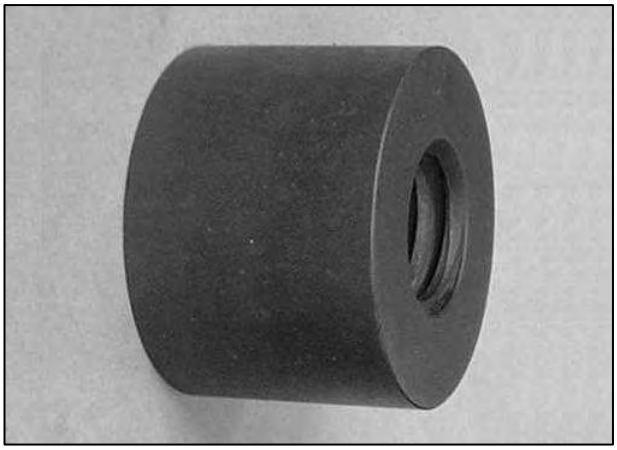

Use :
-For manual or powered control.
-For medium and high rotation speeds.
-For working under moderate load.
-Very low sound level.

The use with steel or stainless steel screws gives very good results.
Can be used without lubrication, but the service life will be reduced.

SINGLE START

Reference	D	C	Contact surface	Weight
	mm	mm	mm²	Kg
ELKM10x2D/G	22	20	200	0.009
ELKM12x3D/G	26	24	280	0.012
ELKM16x4D/G	36	32	490	0.032
ELKM20x4D/G	45	40	790	0.060
ELKM24x5D/G	50	48	1130	0.088
ELKM30x6D/G	60	60	1780	0.150
ELKM36x6D/G	75	72	2610	0.300
ELKM40x7D/G	80	80	3210	0.370

TWO STARTS

Reference	D	C	Contact surface	Weight
	mm	mm	mm²	Kg
ELKM10x4P2D*	22	20	200	0.009
ELKM12x6P3D	26	24	280	0.012
ELKM16x8P4D	36	32	490	0.032
ELKM20x8P4D	45	40	790	0.060
ELKM24x10P5D	50	48	1130	0.088
ELKM30x12P6D	60	60	1780	0.150
ELKM36x12P6D	75	72	2610	0.300
ELKM40x14P7D	80	80	3210	0.370

D = right-hand thread G = left-hand thread * = available in 8 days

Trapezoidal cylindrical machined nuts KSM of steel 11SMnPb37 according to ISO 2901/2903 and DIN 103.

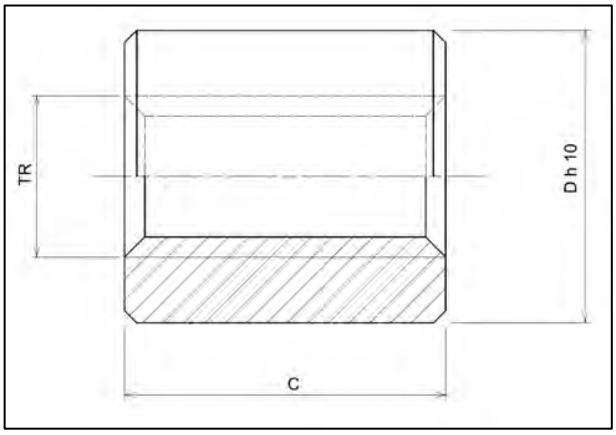

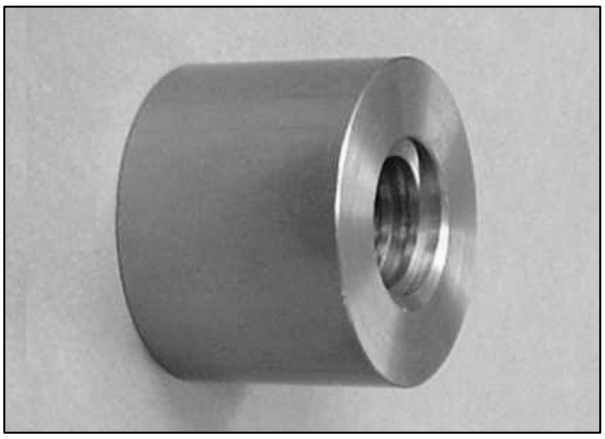

Use:
-For manual control.
-For low rotation speeds.
-For clamping or locking functions.
-For receiving dead weights.

The use of steel/steel contact surface is not recommended for motorised motions.

SINGLE START

Reference	D mm	C mm	Contact surface mm²	Weight Kg
EKSM10x2D/G	22	15	150	0.035
EKSM12x3D/G	26	18	210	0.055
EKSM14x3D/G	30	21	285	0.090
EKSM16x4D/G	36	24	365	0.155
EKSM18x4D/G	40	27	470	0.215
EKSM20x4D/G	45	30	590	0.305
EKSM22x5D/G	45	33	700	0.322
EKSM24x5D/G	50	36	845	0.440
EKSM26x5D/G	50	39	1005	0.450
EKSM28x5D/G	60	42	1175	0.740
EKSM30x6D/G	60	45	1335	0.765
EKSM32x6D/G	60	48	1430	0.790
EKSM36x6D/G	75	54	1950	1.470
EKSM40x7D/G	80	60	2400	1.830
EKSM44x7D/G	80	66	2940	1.890
EKSM50x8D/G	90	75	3790	2.695
EKSM60x9D/G	100	90	5490	3.865
EKSM70x10D/G	110	100	7140	5.115
EKSM80x10D/G	120	110	8900	6.000

TWO STARTS

Reference	D mm	C mm	Contact surface mm²	Weight Kg
EKSM10x4P2D*	22	15	150	0.035
EKSM12x6P3D	26	18	210	0.055
EKSM14x6P3D	30	21	285	0.090
EKSM16x8P4D	36	24	365	0.155
EKSM18x8P4D	40	27	470	0.215
EKSM20x8P4D	45	30	590	0.305
EKSM22x10P5D*	45	33	700	0.322
EKSM24x10P5D	50	36	845	0.440
EKSM26x10P5D*	50	39	1005	0.450
EKSM28x10P5D	60	42	1175	0.740
EKSM30x12P6D	60	45	1335	0.765
EKSM32x12P6D	60	48	1430	0.790
EKSM36x12P6D	75	54	1950	1.470
EKSM40x14P7D	80	60	2400	1.830

D = right-hand thread
G = left-hand thread
* = available in 8 days

Trapezoidal long cylindrical machined nuts LSM of steel 11SMnPb37 according to ISO 2901/2903 and DIN 103.

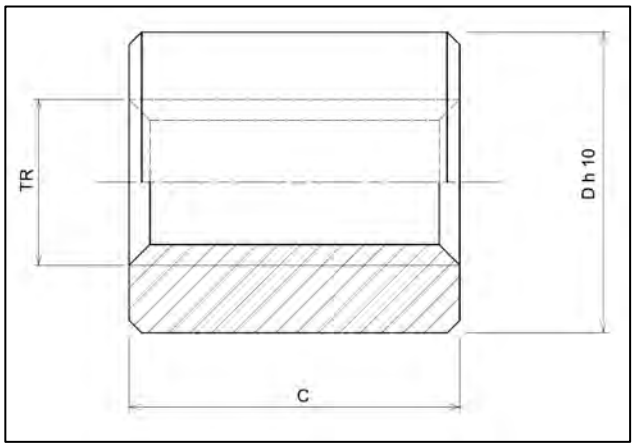

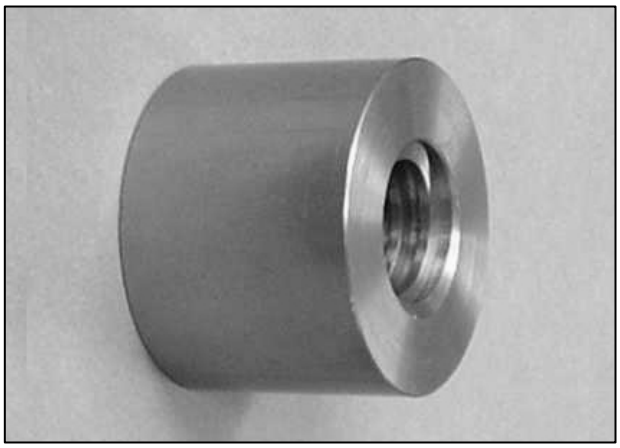

Use :
-For manual control.
-For low rotation speeds.
-For clamping or locking functions.
-For receiving dead weights.

The use of steel/steel contact surface is not recommended for motorised motions.

SINGLE START

Reference	D	C	Contact surface	Weight
	mm	mm	mm²	Kg
ELSM10x2D/G	22	20	200	0.047
ELSM12x3D/G	26	24	279	0.073
ELSM14x3D/G	30	28	379	0.120
ELSM16x4D/G	36	32	485	0.206
ELSM18x4D/G	40	36	625	0.286
ELSM20x4D/G	45	40	785	0.406
ELSM22x5D/G	45	44	931	0.428
ELSM24x5D/G	50	48	1124	0.585
ELSM26x5D/G	50	52	1337	0.599
ELSM28x5D/G	60	56	1563	0.984
ELSM30x6D/G	60	60	1776	1.017
ELSM32x6D/G	60	64	1902	1.051
ELSM36x6D/G	75	72	2594	1.955
ELSM40x7D/G	80	80	3192	2.434
ELSM44x7D/G	80	88	3910	2.514

TWO STARTS

Reference	D	C	Contact surface	Weight
	mm	mm	mm²	Kg
ELSM10x4P2D*	22	20	200	0.047
ELSM12x6P3D	26	24	279	0.073
ELSM14x6P3D	30	28	379	0.120
ELSM16x8P4D	36	32	485	0.206
ELSM18x8P4D	40	36	625	0.286
ELSM20x8P4D	45	40	785	0.406
ELSM22x10P5D*	45	44	931	0.428
ELSM24x10P5D	50	48	1124	0.585
ELSM26x10P5D*	50	52	1337	0.599
ELSM28x10P5D*	60	56	1563	0.984
ELSM30x12P6D	60	60	1776	1.017
ELSM32x12P6D*	60	64	1902	1.051
ELSM36x12P6D	75	72	2594	1.955
ELSM40x14P7D	80	80	3192	2.434

D = right-hand thread G = left-hand thread * = available in 8 days

Trapezoidal hexagonal machined nuts SKM of steel 11SMnPb37 according to ISO 2901/2903 and DIN 103

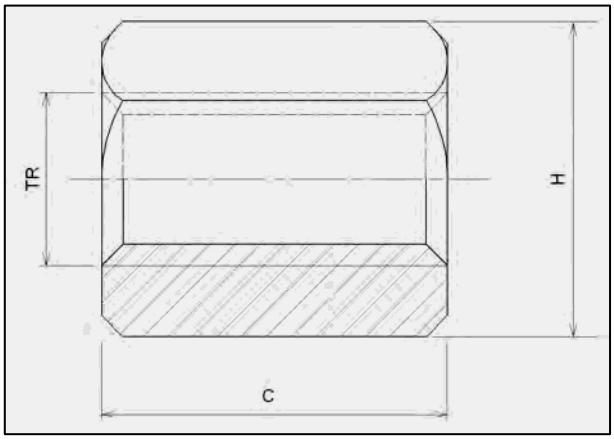

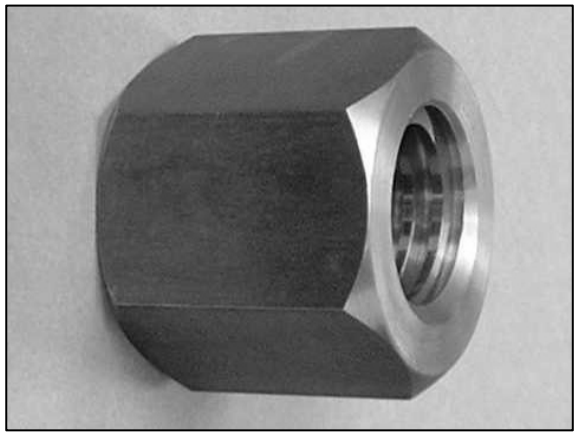

Use :
-For manual control.
-For low rotation speeds.
-For clamping or locking functions.
-For receiving dead weights.

The use of steel/steel contact surface is not recommended for motorised motions.

SINGLE START

Reference	H across flats mm	C mm	Contact surface mm²	Weight Kg
ESKM10x2D/G	17	15	150	0.022
ESKM12x3D/G	19	18	210	0.032
ESKM14x3D/G	22	21	285	0.049
ESKM16x4D/G	24	24	365	0.065
ESKM18x4D/G	27	27	470	0.091
ESKM20x4D/G	30	30	590	0.124
ESKM22x5D/G	30	33	700	0.125
ESKM24x5D/G	36	36	845	0.219
ESKM26x5D/G	36	39	1005	0.216
ESKM28x5D/G	41	42	1175	0.318
ESKM30x6D/G	46	45	1335	0.445
ESKM32x6D/G	50	48	1430	0.567
ESKM36x6D/G	55	54	1950	0.708
ESKM40x7D/G	60	60	2400	0.893
ESKM44x7D/G	65	66	2940	1.538
ESKM50x8D/G	75	75	3790	1.889
ESKM60x9D/G	90	90	5490	3.277

TWO STARTS

Reference	H across flats mm	C mm	Contact surface mm²	Weight Kg
ESKM10x4P2D*	17	15	150	0.022
ESKM12x6P3D	19	18	210	0.032
ESKM14x6P3D	22	21	285	0.049
ESKM16x8P4D	24	24	365	0.065
ESKM18x8P4D	27	27	470	0.091
ESKM20x8P4D	30	30	590	0.124
ESKM22x10P5D*	30	33	700	0.125
ESKM24x10P5D	36	36	845	0.219
ESKM26x10P5D*	36	39	1005	0.216
ESKM28x10P5D*	41	42	1175	0.318
ESKM30x12P6D	46	45	1335	0.445
ESKM32x12P6D*	50	48	1430	0.567
ESKM36x12P6D	55	54	1950	0.708
ESKM40x14P7D	60	60	2400	0.893

D = right-hand thread
G = left-hand thread
* = available in 8 days

Trapezoidal square machined nuts VKM of steel 11SMnPb37 according to ISO 2901/2903 and DIN 103

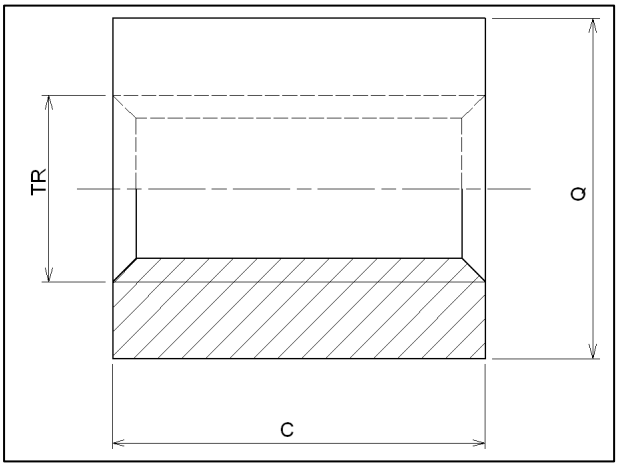

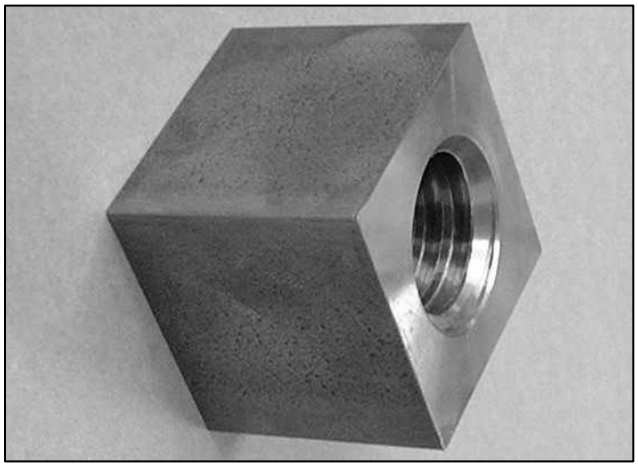

Use :
-For manual control.
-For low rotation speeds.
-For clamping or locking functions.
-For receiving dead weights.

The use of steel/steel contact surface is not recommended for motorised motions.

SINGLE START

Reference	Q across flats mm	C mm	Contact surface mm²	Weight Kg
EVKM10x2D/G	17	15	150	0.027
EVKM12x3D/G	25	18	210	0.076
EVKM14x3D/G	25	20	285	0.079
EVKM16x4D/G	28	24	365	0.119
EVKM18x4D/G	30	28	470	0.154
EVKM20x4D/G	35	30	590	0.259
EVKM22x5D/G	35	33	700	0.240
EVKM24x5D/G	40	36	845	0.354
EVKM26x5D/G	40	39	1005	0.363
EVKM28x5D/G	45	42	1175	0.506
EVKM30x6D/G	45	45	1335	0.513
EVKM32x6D/G	55	48	1430	0.891
EVKM36x6D/G	60	54	1950	1.163
EVKM40x7D/G	60	60	2400	1.216
EVKM44x7D/G	65	66	2940	1.538

TWO STARTS

Reference	Q across flats mm	C mm	Contact surface mm²	Weight Kg
EVKM10x4P2D*	17	15	150	0.027
EVKM12x6P3D	25	18	210	0.076
EVKM14x6P3D	25	20	285	0.079
EVKM16x8P4D	28	24	365	0.119
EVKM18x8P4D*	30	28	470	0.154
EVKM20x8P4D	35	30	590	0.259
EVKM22x10P5D*	35	33	700	0.240
EVKM24x10P5D	40	36	845	0.354
EVKM26x10P5D*	40	39	1005	0.363
EVKM28x10P5D*	45	42	1175	0.506
EVKM30x12P6D	45	45	1335	0.513
EVKM32x12P6D*	55	48	1430	0.891
EVKM36x12P6D	60	54	1950	1.163
EVKM40x14P7D	60	60	2400	1.216

D = right-hand thread G = left-hand thread * = available in 8 days

Rolled ball screws KGS

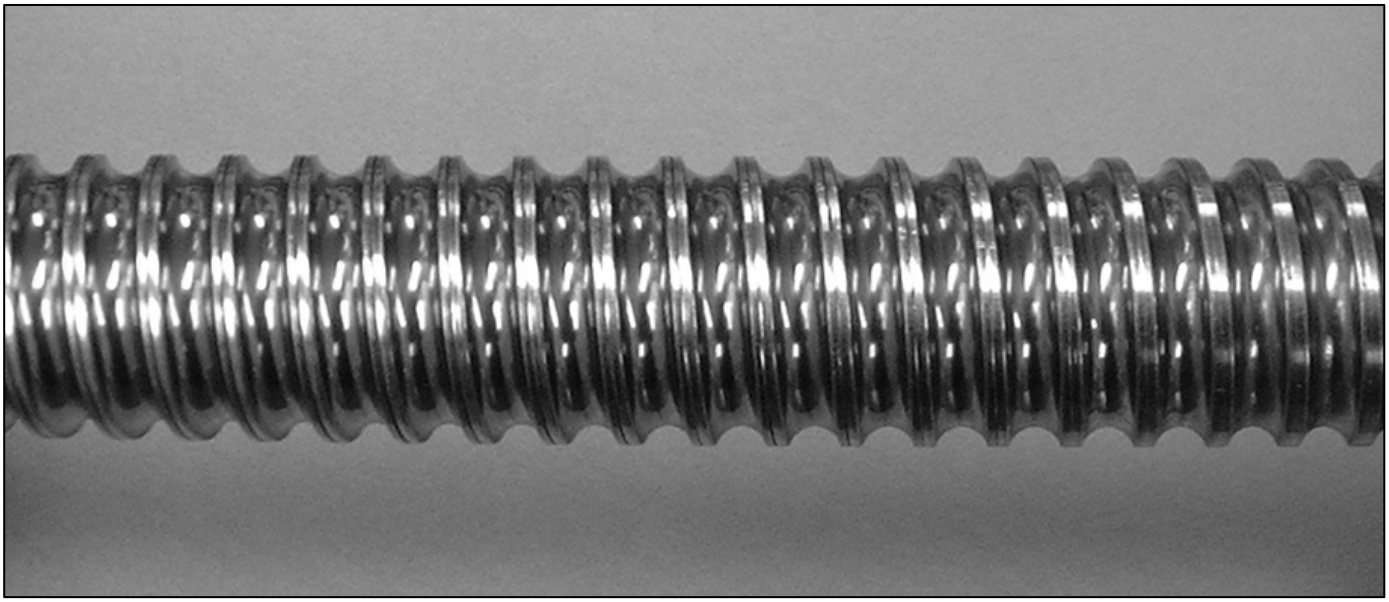

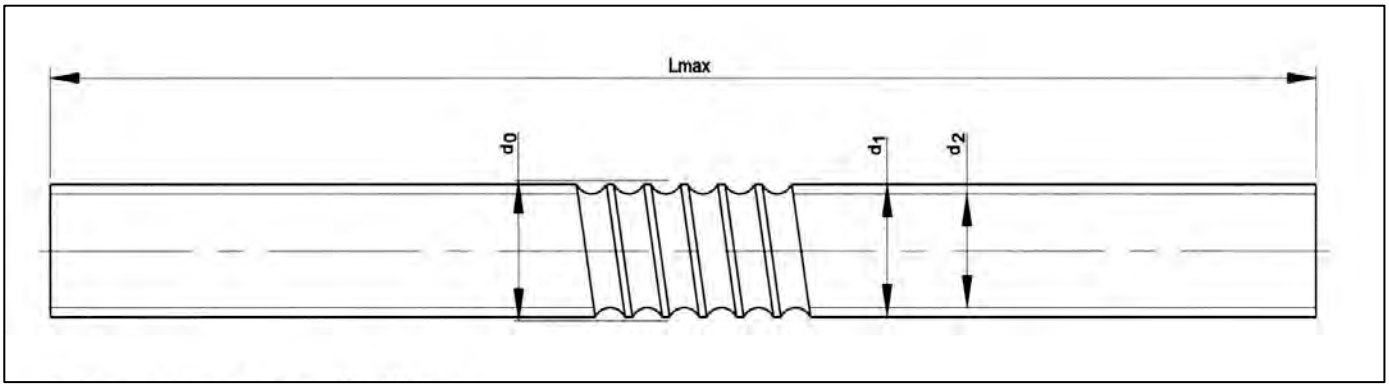

Class of tolerance: T5 = 23µ / 300 mm
T7 = 52µ / 300 mm
T9 = 130µ / 300 mm
T10 = 200µ / 300 mm

Rolled ball screws KGS

Profile: Gothic profile with 5 or 10 mm pitch.

Material: Cf 53 or C55R.

Running face: induction treated at 60+/- 2 HRC and polished

Precision: The screws are supplied with quality T7.

On request, we can supply quality T5, T9 or T10.

Reference	Planar moment of inertia	Section modulus	Mass moment of inertia	Dimensions				Ball Ø	Number of starts	Weight/m
				do	d1	d2	Lmax			
	[10^4 mm^4]	[10^3mm^3]	[kg*m²/m]	[mm]	[mm]	[mm]	[mm]	[mm]		[kg]
KGS16x05T7R	0.136	0.211	$3,14*10^{-5}$	16	15.5	12.9	3000	3.5	1	1.26
KGS16x10P5T7R	0.136	0.211	$3,14*10^{-5}$	16	15.5	12.9	3000	3.5	2	1.26
KGS20x05T7R + L	0.4	0.474	$8,28*10^{-5}$	20	19.5	16.9	6000	3.5	1	1.26
KGS20x20P5T7R	0.4	0.474	$8,28*10^{-5}$	20	19.5	16.9	6000	3.5	4	2.04
KGS20x50P10T7R	0.364	0.441	$7,92*10^{-5}$	20	19.1	16.5	6000	3.5	5	2.07
KGS25x5T7R	1.13	1.03	$2,23*10^{-4}$	25	24.5	21.9	6000	3.5	1	3.33
KGS25x10P5T7R	1.13	1.03	$2,23*10^{-4}$	25	24.5	21.9	6000	3.5	2	3.33
KGS25x25P5T7R	1.15	1.05	$2,25*10^{-4}$	25	24.5	22	6000	3.5	5	3.33
KGS32x5T7R + L	3.42	2.37	$6,39*10^{-4}$	32	31.5	28.9	6000	3.5	1	5.61
KGS32x10T7R	2.8	2.04	$6,09*10^{-4}$	32	32.1	27.5	6000	6.35	1	5.61
KGS32x20P5T7R	3.33	2.32	$6,3*10^{-4}$	32	31.4	28.7	6000	3.5	4	5.61
KGS32x40P5T7R	3.42	2.37	$6,89*10^{-4}$	32	32.6	28.9	6000	3.5	8	5.61
KGS40x5T7R	9.1	4.93	$1,64*10^{-3}$	40	39.5	36.9	6000	3.5	1	9.03
KGS40x10T7R	6.64	3.89	$1,52*10^{-3}$	40	39.5	34.1	6000	7.14	1	8.33
KGS40x20P10T7R	8.15	4.54	$1,64*10^{-3}$	40	39.7	35.9	6000	5	2	9.01
KGS50x10T7R	18.4	8.36	$3,69*10^{-3}$	50	49.2	44	6000	7.14	1	13.48
KGS50x20P10T7R	18.4	8.36	$3,71*10^{-3}$	50	49.4	44	6000	7.14	2	13.48
KGS63x10T7R	51.8	18.2	$9,9*10^{-3}$	63	62.2	57	6000	7.14	1	22.04
KGS80x10T7R	148	39.95	$2,69*10^{-2}$	80	79.5	74.1	6-7000	7.14	1	36.41

CYLINDRICAL BALL NUTS DIN

KGMDZ

Cylindrical type ball nut with lubrication hole and key-way.
Material : The nuts are made of steel 16MnCr5 or 100Cr6.

Ball transfer for single start nut: Recycling pins.

Ball transfer for multi-start nut: 2 deflectors and one tubular conduct located within the periphery of the nut or recycling pins.

Sealing rings to avoid lubricant leaks.

Axial play : Pitch of 5 = 0.05mm, pitch of 10 = 0.10mm, multiple threads = 0.20mm.

Reduction of play : It is made possible thanks to the gothic profile of the thread and the choice of the ball size.

Reference	Type	Number of tracks	Load rating		Ball Ø	Unit weight
			C dynamic [KN]	C_0 static [KN]	[mm]	[kg]
SINGLE START						
KGMDZ16x5D	DIN S	3	7.00	12.70	3.50	0.15
KGMDZ20x5D/G	DIN S	3	8.00	17.00	3.50	0.15
KGMDZ25x5D	DIN S	3	9.50	22.40	3.50	0.20
KGMDZ32x5D/G	DIN S	5	17.00	49.00	3.50	0.30
KGMDZ32x10D	DIN S	3	25.70	56.00	6.35	0.60
KGMDZ40x5D	DIN S	5	19.00	63.50	3.50	0.50
KGMDZ40x10D	DIN S	3	30.00	70.00	7.14	0.90
KGMDZ50x10D	DIN S	5	55.00	153.00	7.14	1.10
KGMDZ63x10D	DIN S	5	60.00	200.00	7.14	1.50
MULTI START						
KGMDZ16x10P5D	DIN S	4	7.60	8.30	3.50	0.15
KGMDZ25x10P5D	DIN M	2	16.50	42.90	3.50	0.25
KGMDZ25x25P5D	DIN M	5	12.80	32.60	3.50	0.20
KGMDZ40x20P10D	DIN M	2	30.50	87.50	5.00	1.20

DIN S

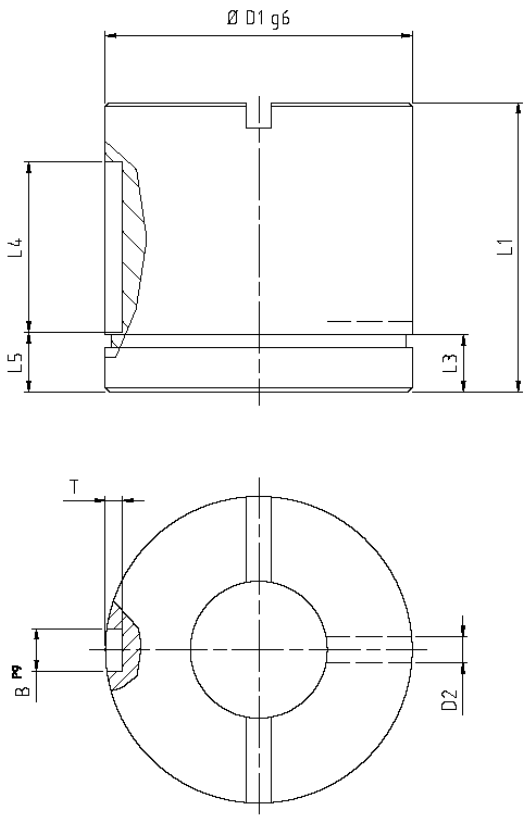

DIN M

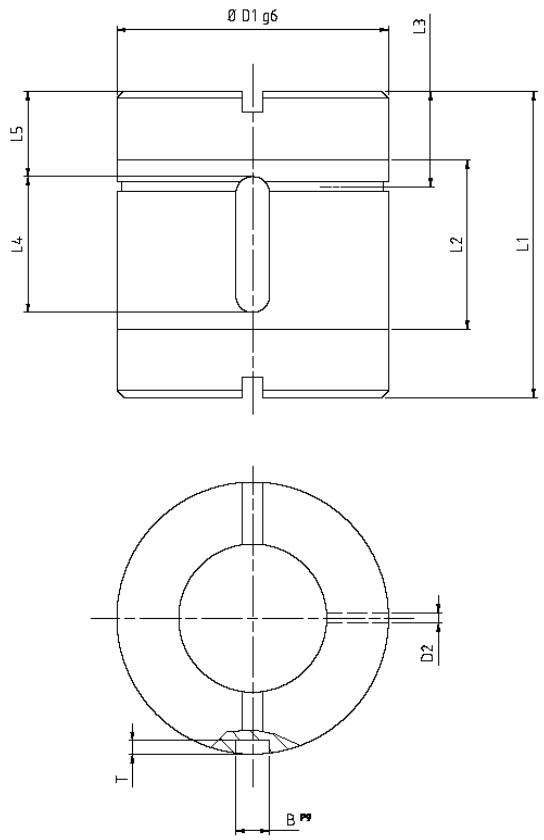

Reference	Dimensions in mm							
	D1 g6	D2	L1	L2	L3	L4	L5	BxT
SINGLE START								
KGMDZ16x5D	28	3	34	-	6.75	20	7	5x2
KGMDZ20x5D/G	36	3	34	-	6.75	20	7	5x2
KGMDZ25x5D	40	3	34	-	6.75	20	7	5x2
KGMDZ32x5D/G	50	3	45	-	7.25	30	7.5	6x2,5
KGMDZ32x10D	50	3	60	-	10	30	15	6x2,5
KGMDZ40x5D	63	3	45	-	7.25	30	7.5	6x2,5
KGMDZ40x10D	63	4	60	-	10	30	15	6x2,5
KGMDZ50x10D	75	4	82	-	11	36	23	6x2.5
KGMDZ63x10D	90	4	82	-	11	36	23	6x2.5
MULTI START								
KGMDZ16x10P5D	28	2.5	42	-	7.00	20	15	5x2
KGMDZ25x10P5D	40	1.5	45	25	13.5	20	12.5	5x2
KGMDZ25x25P5D	40	1.5	35	19	11.5	13	11	5x3
KGMDZ40x20P10D	63	1.5	70	50	15	30	20	6x2,5

CYLINDRICAL BALL NUTS

KGMGZ

Cylindrical type ball nut with lubrication hole and key-way.
Material : The nuts are made of steel 16MnCr5 or 100Cr6.

Ball transfer for single start nut : Recycling pins.

Ball transfer for multi-start nut : 2 deflectors and one tubular conduct located within the periphery of the nut or recycling pins.

Sealing rings to avoid lubricant leaks.

Axial play : Pitch of 5 = 0.05mm, pitch of 10 = 0.10mm, multiple threads = 0.20mm.

Reduction of play : It is made possible thanks to the gothic profile of the thread and the choice of the ball size.

Reference	Type	Number of tracks	Load rating		Ball Ø	Unit weight
			C dynamic [KN]	C_0 static [KN]	[mm]	[kg]
SINGLE START						
KGMGZ20x5D	GBS	3	8.00	17.00	3.50	0.15
KGMGZ25x5D	GBS	3	9.50	22.40	3.50	0.20
KGMGZ32x5D	GBS	5	17.00	49.00	3.50	0.30
KGMGZ32x10D	GBS	3	25.70	56.00	6.35	0.60
KGMGZ40x5D	GBS	5	19.00	63.50	3.50	0.50
KGMGZ50x10D	GBS	5	55.00	153.00	7.14	1.10
KGMGZ63x10D	GBS	5	60.00	200.00	7.14	1.50
KGMGZ80x10D	GBS	5	69.00	260.00	7.14	2.10
MULTI START						
KGMGZ20x20P5D	GBM	4	9.00	19.10	3.50	0.15
KGMGZ20x50P10D	GBM	5	7.90	19.00	3.50	0.30
KGMGZ32x20P5D	GBM	4	19.50	65.00	3.50	0.50
KGMGZ32x40P5D	GBM	4	11.50	33.50	3.50	0.45
KGMGZ50x20P10D	GBM	2	61.70	178.40	7.14	1.40

GBS

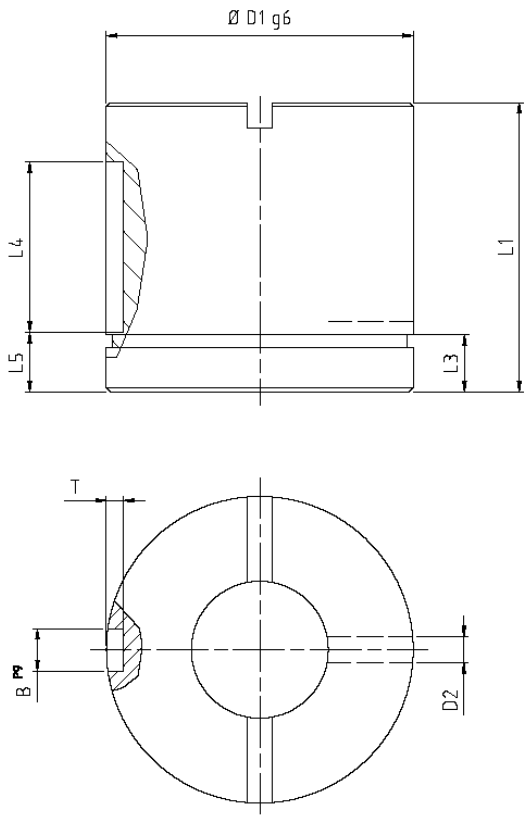

GBM

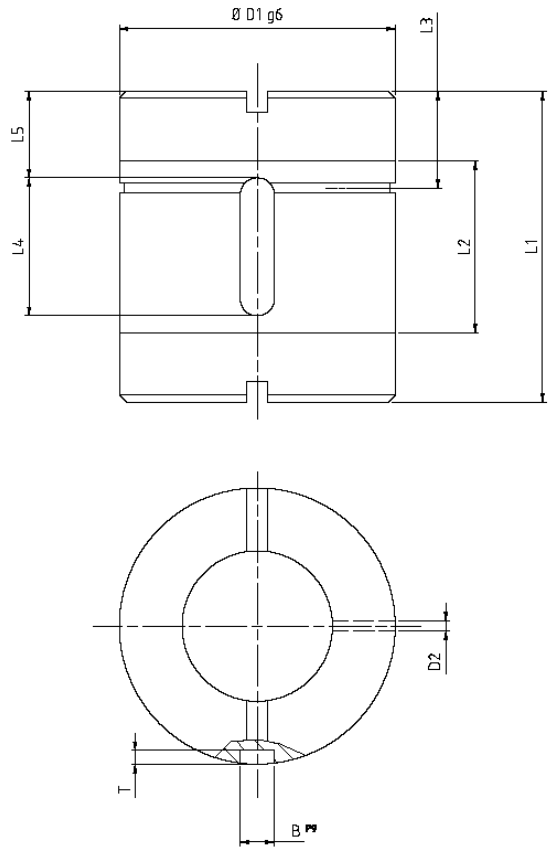

Reference	Dimensions in mm							
	D1 g6	D2	L1	L2	L3	L4	L5	BxT
SINGLE START								
KGMGZ20x5D	32	3	34	-	6.75	20	7	5x2
KGMGZ25x5D	38	3	34	-	6.75	20	7	5x2
KGMGZ32x5D	45	3	45	-	7.25	30	7.5	6x2,5
KGMGZ32x10D	53	3	60	-	10	30	15	6x2,5
KGMGZ40x5D	53	3	45	-	7.25	30	7.5	6x2,5
KGMGZ50x10D	72	4	82	-	11	36	23	6x2.5
KGMGZ63x10D	85	4	82	-	11	36	23	6x2.5
KGMGZ80x10D	105	4	82	-	11	36	23	8x3.1
MULTI START								
KGMGZ20x20P5D	35	1.5	30	14	11.5	12	9	5x3
KGMGZ20x50P10D	35	1.5	56	40	14	20	18	5x2
KGMGZ32x20P5D	53	1.5	55	35	16	20	17.5	6x4
KGMGZ32x40P5D	53	1.5	50	30	16	25	12.5	6x4
KGMGZ50x20P10D	85	1.5	73.5	50	16.75	30	22	6x2,5

FLANGED BALL NUTS DIN

KGMDF

Flanged type nut with lubrication and fixation holes.
Material: The nuts are made of steel 16MnCr5 or 100Cr6.

Ball transfer for single start nut: Recycling pins.

Ball transfer for multi-start nut: 2 deflectors and one tubular conduct located within the periphery of the nut or recycling pins.

Sealing rings to avoid lubricant leaks.

Axial play: Pitch of 5 = 0.05mm, pitch of 10 = 0.10mm, multiple threads = 0.20mm.

Reduction of play: It is made possible thanks to the gothic profile of the thread and the choice of the size of the balls.

Reference	Type	Hole pattern	Number of tracks	Load rating C dynamic [KN]	Load rating C_0 static [KN]	Ball Ø [mm]	Unit weight [kg]
SINGLE START							
KGMDF16x5D	DIN S	1	3	7.00	12.70	3.50	0.20
KGMDF20x5D/G	DIN S	1	3	8.00	17.00	3.50	0.25
KGMDF25x5D	DIN S	1	3	9.50	22.40	3.50	0.35
KGMDF32x5D/G	DIN S	1	5	17.00	49.00	3.50	0.55
KGMDF32x10D	DIN S	1	3	25.70	56.00	6.35	0.90
KGMDF40x5D	DIN S	2	5	19.00	63.50	3.50	0.80
KGMDF40x10D	DIN S	2	3	30.00	70.00	7.14	1.20
KGMDF50x10D	DIN S	2	5	55.00	153.00	7.14	2.00
KGMDF63x10D	DIN S	2	5	60.00	200.00	7.14	2.60
KGMDF80x10D	DIN S	2	5	69.00	260.00	7.14	3.70
MULTI START							
KGMDF16x10P5D	DIN S	1	4	7.60	8.30	3.50	0.25
KGMDF25x10P5D	DIN M	1	2	16.50	42.90	3.50	0.40
KGMDF25x25P5D	DIN M	1	5	12.80	32.60	3.50	0.40
KGMDF40x20P10D	DIN M	2	2	30.50	87.50	5.00	1.35

DIN S

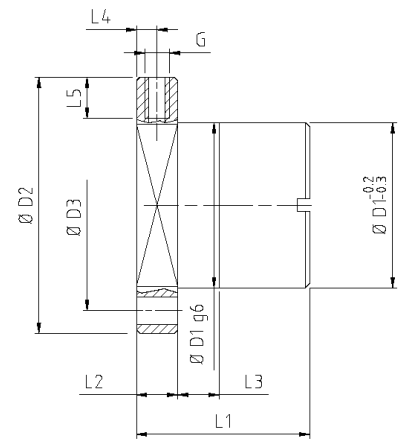

DIN M

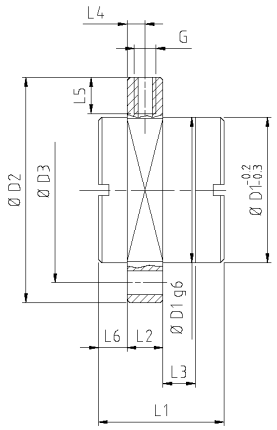

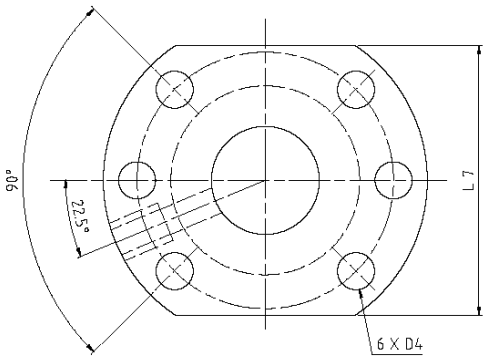

Hole pattern 1

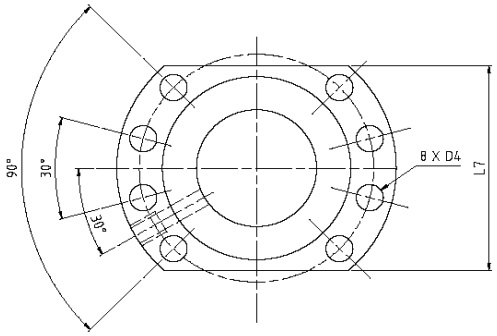

Hole pattern 2

Reference	Dimensions in mm											
	D1 g6	D2 h13	D3	D4	L1	L2	L3	L4	L5	L6	L7	G
SINGLE START												
KGMDF16x5D	28	48	38	5.5	42	10	10	5	8	-	40	M6
KGMDF20x5D/G	36	58	47	6.6	42	10	10	5	8	-	44	M6
KGMDF25x5D	40	62	51	6.6	42	10	10	5	8	-	48	M6
KGMDF32x5D/G	50	80	65	9	55	12	10	6	8	-	62	M6
KGMDF32x10D	50	80	65	9	69	12	16	6	8	-	62	M6
KGMDF40x5D	63	93	78	9	57	14	10	7	10	-	70	M8x1
KGMDF40x10D	63	93	78	9	71	14	10	7	10	-	70	M8x1
KGMDF50x10D	75	110	93	11	95	16	16	8	10	-	85	M8x1
KGMDF63x10D	90	125	108	11	97	18	16	9	10	-	95	M8x1
KGMDF80x10D	105	145	125	14	101	20	16	10	10	-	110	M8x1
MULTI START												
KGMDF16x10P5D	28	48	38	5.5	48	10	10	5	8	-	40	M6
KGMDF25x10P5D	40	62	51	6.6	45	10	15	5	10	10	48	M6
KGMDF25x25P5D	40	62	51	6.6	35	10	9	5	10	8	48	M6
KGMDF40x20P10D	63	93	78	9	70	14	40.25	7	10	5.75	70	M8x1

FLANGED BALL NUTS

KGMGF

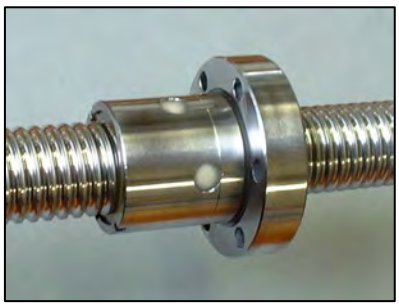

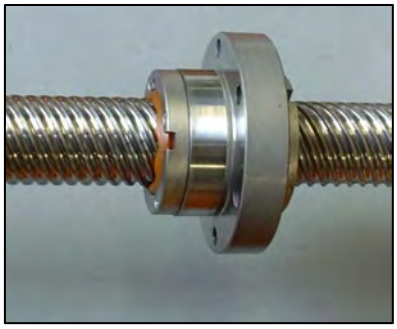

Flanged type nut with lubrication and fixation holes.
Material: The nuts are made of steel 16MnCr5 or 100Cr6.

Ball transfer for single start nut: Recycling pins.

Ball transfer for multi-start nut: 2 deflectors and one tubular conduct located within the periphery of the nut or recycling pins.

Sealing rings to avoid lubricant leaks.

Axial play: Pitch of 5 = 0.05mm, pitch of 10 = 0.10mm, multiple threads = 0.20mm.

Reduction of play: It is made possible thanks to the gothic profile of the thread and the choice of the size of the balls.

Reference	Type	Hole pattern	Number of tracks	Load rating C dynamic [KN]	Load rating C_0 static [KN]	Ball Ø [mm]	Unit weight [kg]
SINGLE START							
KGMGF16x5D	GBS	3	3	7.00	12.70	3.50	0.20
KGMGF20x5D	GBS	3	3	8.00	17.00	3.50	0.25
KGMGF25x5D	GBS	3	3	9.50	22.40	3.50	0.35
KGMGF32x5D	GBS	3	5	17.00	49.00	3.50	0.55
KGMGF32x10D	GBS	3	3	25.70	56.00	6.35	0.90
KGMGF40x5D	GBS	3	5	19.00	63.50	3.50	0.80
KGMGF40X10D	GBS	3	3	30.00	70.00	7.14	1.20
KGMGF50x10D	GBS	3	5	55.00	153.00	7.14	2.00
KGMGF63x10D	GBS	3	5	60.00	200.00	7.14	2.60
KGMGF80x10D	GBS	3	5	69.00	260.00	7.14	3.70
MULTI START							
KGMGF20x20P5D	GBM	3	4	9.00	19.10	3.50	0.25
KGMGF20x50P10D	GBM	3	5	7.90	19.00	3.50	0.40
KGMGF32x20P5D	GBM	3	4	19.50	65.00	3.50	0.50
KGMGF32x40P5D	GBM	3	4	11.50	33.50	3.50	0.50
KGMGF50x20P10D	GBM	2	2	61.70	178.40	7.14	2.00

GBS

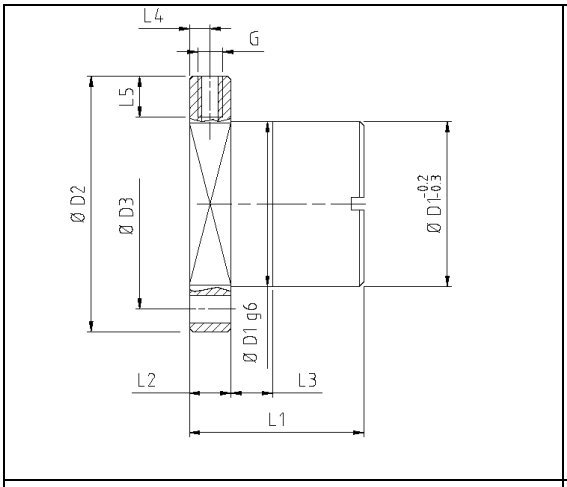

GBM

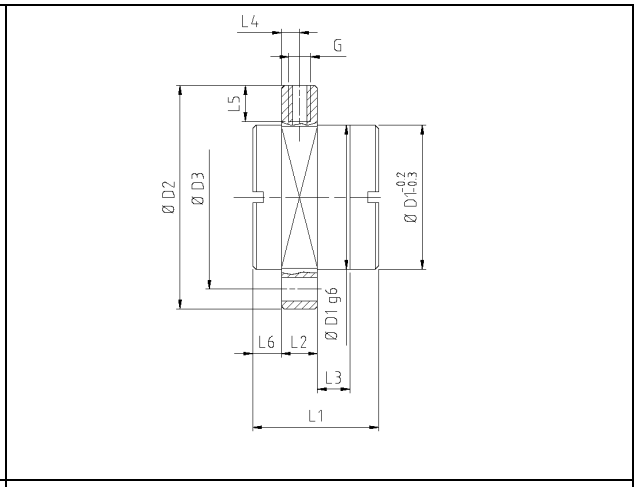

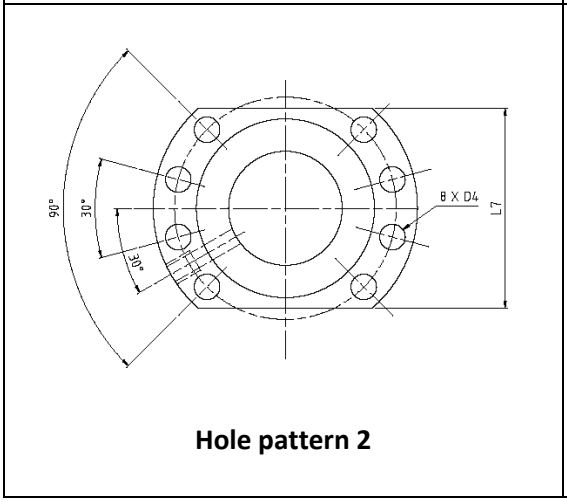

Hole pattern 2

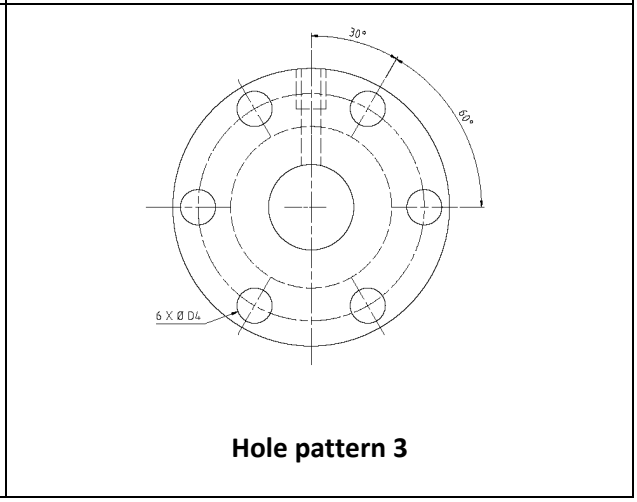

Hole pattern 3

Reference	Dimensions in mm											
	D1 g6	D2 h13	D3	D4	L1	L2	L3	L4	L5	L6	L7	G
SINGLE START												
KGMGF16x5D	28	48	38	5.5	44	12	8	6	8	-	-	M6
KGMGF20x5D	32	55	45	7	44	12	8	6	8	-	-	M6
KGMGF25x5D	38	62	50	7	46	14	8	7	8	-	-	M6
KGMGF32x5D	45	70	58	7	59	16	10	8	8	-	-	M6
KGMGF32x10D	53	80	68	7	73	16	10	8	8	-	-	M8x1
KGMGF40x5D	53	80	68	7	59	16	10	8	8	-	-	M6
KGMGF40X10D	63	95	78	9	73	16	10	8	8	-	-	M8x1
KGMGF50x10D	72	110	90	11	97	18	10	9	8	-	-	M8x1
KGMGF63x10D	85	125	105	11	99	20	10	10	8	-	-	M8x1
KGMGF80x10D	105	145	125	14	101	22	10	11	10	-	-	M8x1
MULTI START												
KGMGF20x20P5D	35	62	50	7	30	10	4	5	8	8	-	M6
KGMGF20x50P10D	35	62	50	7	56	10	30	5	8	8	-	M6
KGMGF32x20P5D	53	80	68	7	55	16	19	8	10	10	-	M6
KGMGF32x40P5D	53	80	68	7	50	16	14	8	10	10	-	M6
KGMGF50x20P10D	85	125	103	11	80	18	38.75	9	10	5	95	M8x1

We started our activities in 1955 as a local supplier of threaded bars for the bar-turning industry. And today we are the leading supplier of screw-drives for transmission industry.

One of the reasons explaining our leading position on the market is our will to focus on our main activity: **cold-formed threading**. We also owe this position to our customers' confidence and to the commitment of our staff. Thus we use our knowledge, know-how and energy for the benefit of the development of one product: **threaded spindles !**

With an extensive range of tools, we offer a very broad variety of rolled threads on the market, such as: trapezoidal, ball-screw, worm, metric, UN, and special profile, multi-start, right-hand, left-hand and knurling.

We possess **the most powerful machine in the world** for cold-formed threading which allows us to offer a wide range from Ø 1.5mm up to Ø 430mm, and pitches from 0.35mm up to 24mm (or Module 7), in lengths beyond 12m.
Our possibilities in the field of machining in relation with our production of threaded bars allow us to ensure the optimal manufacture of machined threaded spindles. Of course, we manufacture nuts according to your drawings and specifications.

OUR PROCESS

Cold-formed threading, more commonly called **rolling**, consist of forming of metal bars by pressing during rotation with tools called dies in order to obtain a thread or a knurling.

Thanks to this performing process, we manufacture amongst others metric, trapezoidal threads, ball screws and worms, using different materials such as current and special steels, stainless steel, brass and numerous alloys.

ECONOMIC EFFICIENCY

The process of rolling allows a high production and an important saving in material as the diameter used is below nominal and unlike cutting it has no chips, thus no material loss.

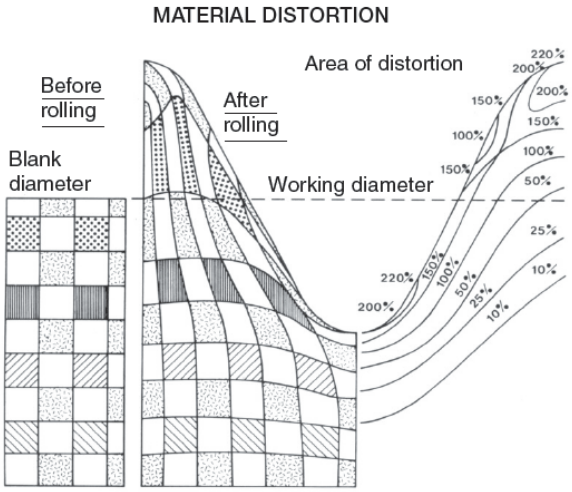

Improvement of the mechanical properties :

Gain reaching 30% on hardness and 12% on Breaking strength,in fact the fibers of the material Are formed but not cut as in case of cutting.

The roller finishing on the surface considerably increases the life time of the screw or of the nut, improves fatigue strength and eliminates the starting points of fracture.

COMPARISONS