www.bergab.ru Тел. (495)-228-06-21, факс (495) 223-3071

SKF

WWW.SKF.UA

SKF

Water pumps

2003/2004

SKF

Водяные помпы

2003/2004

www.bergab.ru Тел. (495)-228-06-21, факс (495) 223-3071

Обозначения

Обозначения разделов каталога

	Применение к автомобил.		Содержание наборов VKMC
	Иллюстрации		Перевод обозн. произв. к обозн. СКФ
	Ссылка от помп к мод. авт.		Перевод обозн. других марок в СКФ

Общие обозначения

	Год модели		Легкий грузовик
	Марки и модели автомоб.		Вал без резьбы
	Тип двигателя		Вал с резьбой
	Заметки и примечания	4	Количество дверей
	Пассажирский автомобиль		Усилитель руля
	кузов типа "универсал" / "комби"		

Сокращения

|→	От	**HCS**	Тип двигателя HCS
→|	До	**Injec**	Впрыск
/	Исключая	**L.H.D**	Руль с левой стороны
AC	Кондиционер воздуха	**Man. GBX**	Ручная КПП
Alu	Алюминиевый корпус	**Man. GBX 6**	6-скоростная КПП
Auto. fan	Автоматический вентилятор	**Mod.**	Для модели ..
Auto. GBX	Автоматическая КПП	**Mot.**	Для двигателя ..
Carbu	Карбюратор	**OHC**	Тип двигателя OHC
Cast.	Корпус из литого чугуна	**OHV**	Тип двигателя OHV
CH	Для автомобиля с шасси ..	**R.H.D**	Руль с правой стороны
CH	Модели для Швейцарии	**SOHC**	Тип двигателя SOHC
Comp	С турбонадувом	**THT**	Термостат
CVH	Тип двигателя CVH	**THW**	Температурн. переключатель
DOHC	Тип двиг. с 2-мя распрвал.	**VKPA/C XXXX**	В производстве
Fix. fan	Стационарн. вентилятор	VKPA/C XXXX	Более не производится

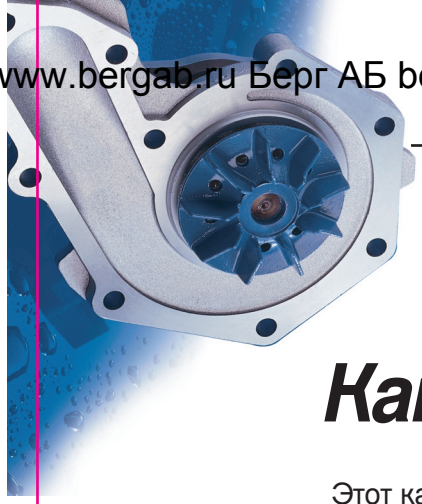

Как пользоваться каталогом.

Этот каталог поможет Вам подобрать тот автокомплект, который Вам нужен. В упаковке набора Вы найдете водяные помпы и дополнительные детали необходимые для ремонта.

Поиск подходящего комплекта

Используя список разделов Вы можете легко найти нужную страницу в каталоге и выбрать правильный комплект.

Марки и модели автомобилей

Тип двигателя
Показаны обозначения двигателя.

Год моделей

Замечания

Обозначение помпы
Набор содержит все необходимые детали для замены помпы.

Пример
Найдя Альфа-Ромео Альпетта, продолжайте поиск, пока не найдете модель с двигателем 2.0 GTV

После проверки ограничений касательно типа или года модели, Вы найдете обозначение набора VKPC

ALFA ROMEO

ALFASUD			
1.2	AS 30100/02/04 - 1186 cc	72 → 76	VKPC 82200
1.2	AS 30100/02/04 - 1186 cc	76 → 84	VKPC 82201
1.3	AS 30156/30164/30168 - 1351 cc	76 → 84	VKPC 82201
1.5	AS 30124/26/28/33/98 - 1490 cc	76 → 84	VKPC 82201
1.5	AR 30146/82/98 - 1490 cc	79 → 89	VKPC 82201
1.5	AR 30520/26 - 1490 cc	79 → 89	VKPC 82201
1.7	AR 30550/58 - 1712 cc	79 → 89	VKPC 82201
ALFETTA			
1.6	AR 01600 - 1570 cc	70 → 85	VKPC 82621
1.8	AR 01678 - 1779 cc	70 → 85	VKPC 82621
2.0	AR 01334 - 1962 cc	70 → 85	VKPC 82621
2.0 GTV	AR 06212 - 1962 cc	70 → 85	VKPC 82621
2.4 TURBO DIESEL (116B30)	VM4HT/2.4 - 2393 cc	70 → 85	VKPC 82623
ARNA			
1.2 (920 A)	AR 31000/AR [illegible]	87	VKPC 82201
1.3 (920 A)	AR 3100[illegible]		[illegible] 82201
1.5 (920 A)	[illegible]		

Визуальная идентификация
Иллюстрации обеспечивают дальнейшую проверку соответствия найденной помпы.

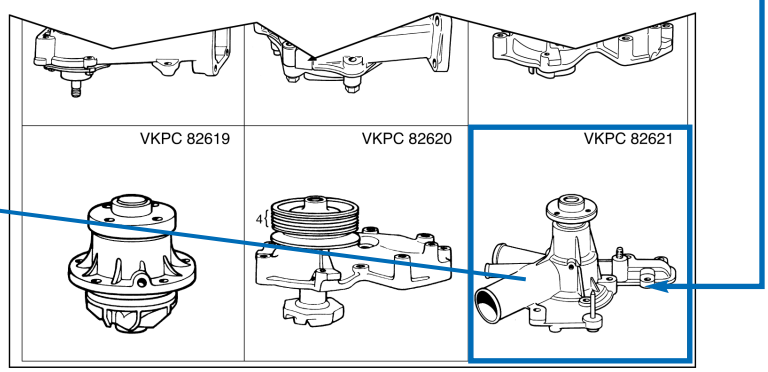

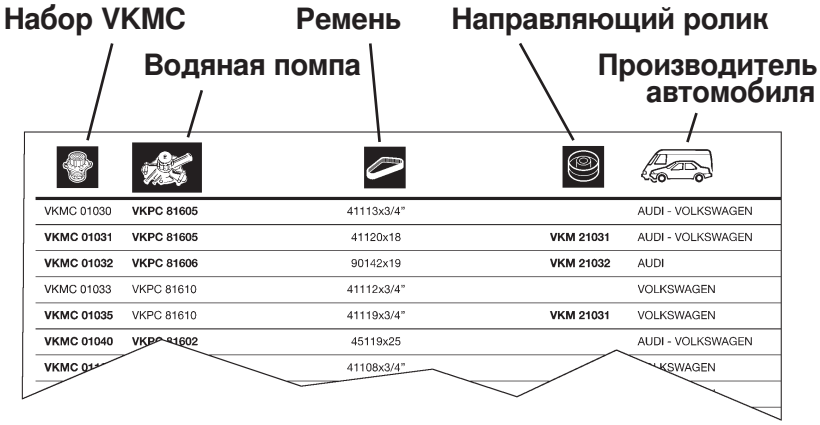

VKMC 01030	**VKPC 81605**	41113x3/4"		AUDI - VOLKSWAGEN
VKMC 01031	**VKPC 81605**	41120x18	**VKM 21031**	AUDI - VOLKSWAGEN
VKMC 01032	**VKPC 81606**	90142x19	**VKM 21032**	AUDI
VKMC 01033	VKPC 81610	41112x3/4"		VOLKSWAGEN
VKMC 01035	VKPC 81610	41119x3/4"	**VKM 21031**	VOLKSWAGEN
VKMC 01040	**VKPC 81602**	45119x25		AUDI - VOLKSWAGEN
VKMC 01[illegible]		41108x3/4"		[illegible]KSWAGEN

Содержимое наборов VKMC

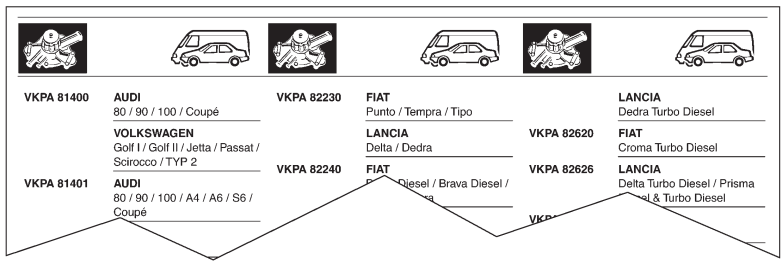

VKPA 81400	**AUDI** 80 / 90 / 100 / Coupé	**VKPA 82230**	**FIAT** Punto / Tempra / Tipo		**LANCIA** Dedra Turbo Diesel
	VOLKSWAGEN Golf I / Golf II / Jetta / Passat / Scirocco / TYP 2		**LANCIA** Delta / Dedra	**VKPA 82620**	**FIAT** Croma Turbo Diesel
VKPA 81401	**AUDI** 80 / 90 / 100 / A4 / A6 / S6 / Coupé	**VKPA 82240**	**FIAT** [illegible] Diesel / Brava Diesel / [illegible]	**VKPA 82626**	**LANCIA** Delta Turbo Diesel / Prisma [illegible]el & Turbo Diesel
					VKP[illegible]

Применение помпы к модели автомобиля

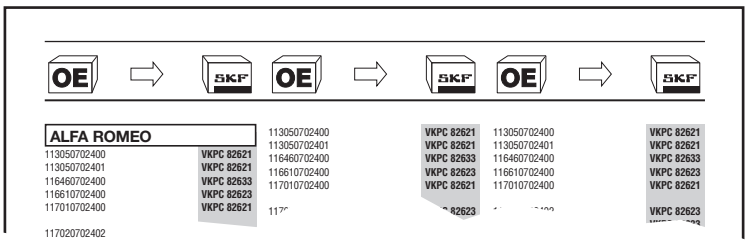

OE	SKF	OE	SKF	OE	SKF
ALFA ROMEO					
113050702400	VKPC 82621	113050702400	VKPC 82621	113050702400	VKPC 82621
113050702401	VKPC 82621	113050702401	VKPC 82621	113050702401	VKPC 82621
116460702400	VKPC 82633	116460702400	VKPC 82633	116460702400	VKPC 82633
116610702400	VKPC 82623	116610702400	VKPC 82623	116610702400	VKPC 82623
117010702400	VKPC 82621	117010702400	VKPC 82621	117010702400	VKPC 82621
117020702402		117[illegible]	[illegible] 82623	[illegible]	VKPC 82623

Перевод обозначений производителя автомобилей к обозначениям VKPA или VKPC

Здесь Вы найдете набор соответствующий обозначению производителя автомобиля (OE).

Как пользоваться каталогом

Содержимое наборов

Для некоторых марок СКФ предлагает разные типы наборов:

Набор VKPC включает полностью помпу и дополнительные детали.

Набор VKPA содержит водяную помпу пристраеваемый корпус и ролик, а также необходимые для их монтажа детали.

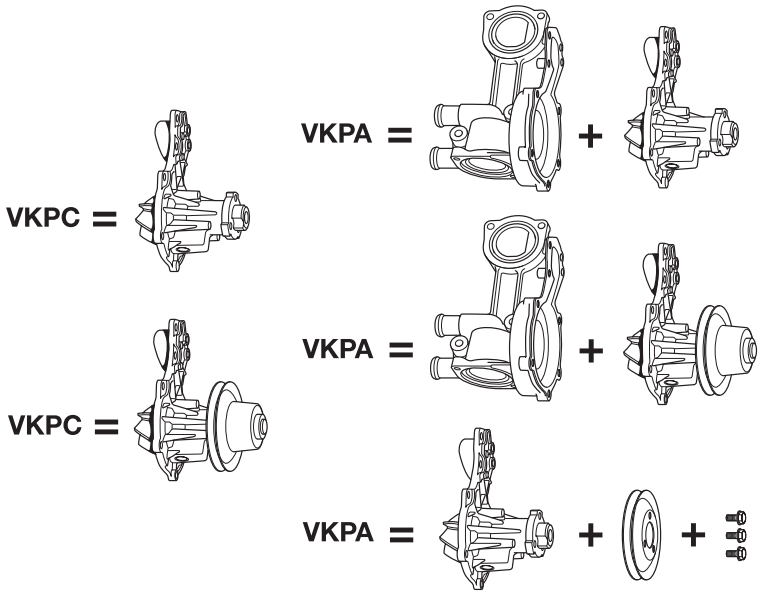

Наборы с зубчатыми ремнями

Когда водяная помпа приводится зубчатым ремнем, VKMC включает как помпу, так и ремень и, если требуется, ролик.

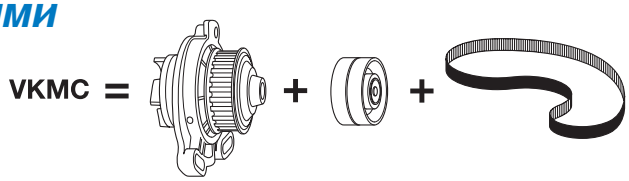

www.bergab.ru Берг АБ bergab@ya.ru Тел. (495)-228-06-21, факс (495) 223-3071

Index

Symbols & Abbreviations

How to use the catalogue

New kits. 10

Index of Manufacturers 11

Application list by type. 12

Illustrations. 121

VKMC composition list 167

Reference list. 171

Conversion list – OE to SKF 185

Conversion list – other brands to SKF . 197

Expo Challenge. 223

www.bergab.ru Берг АБ bergab@ya.ru Тел. (495)-228-06-21, факс (495) 223-3071

Install Confidence.

SKF *AquaMax*

Before we put our name on them ...

We put our technology in them.

Maximum flow under all driving conditions. A high-tech impeller coating for added corrosion resistance. And a unitized seal design to eliminate vapor leakage and extend pump life. For more information about SKF AquaMax, the quality standard for replacement pumps, talk to your SKF Automotive Parts Distributor or visit our website: **www.vsm.skf.com**

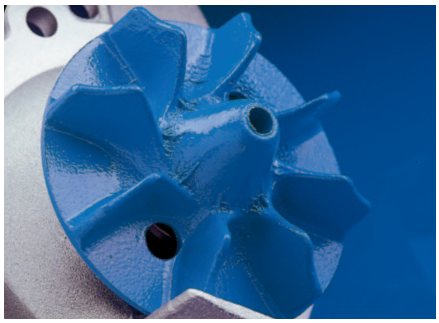

Optimized Hydraulics

Impeller design and material selection assure maximum flow and pressure. A high-tech blue coating, used in the aerospace industry, minimizes problems with inferior coolants, preventing small particles of cooling liquid from sticking to the impeller for maximum corrosion resistance.

Superior Materials

High quality bearings and case-hardened spindles provide high load capacity, including both axial and radial stresses. Unitized mechanical seals virtually eliminate premature leaks, the cause of 90% of all water pump replacements.

Precision Engineered

Unlike inferior rebuilt aftermarket pumps that can fail prematurely, SKF Water Pumps are all new, and manufactured to meet or exceed all O.E. specifications. Precise manufacturing of all components assures proper fit, easier installation, and superior performance.

Superior performance and endurance, under every driving condition.

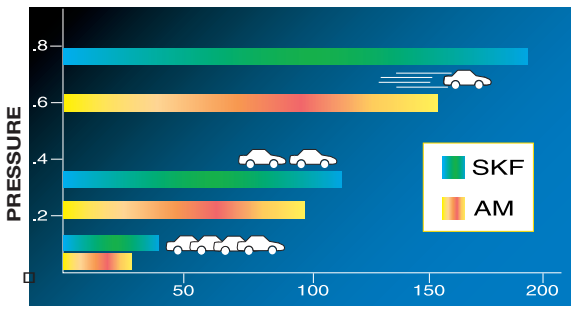

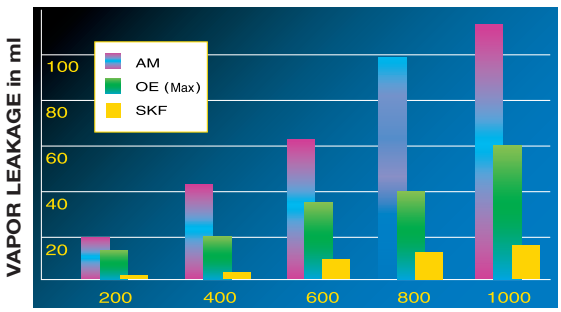

Superior Sealing Technology
SKF Water Pumps are subjected to rigorous testing to assure superior performance and endurance. When run for 1000 hours at average car speeds of 100 km/h, vapor leakage is well below acceptable O.E. standards and far below that common with typical aftermarket replacement units.

Superior Flow
Rigorous bench testing shows that at all speeds up to 1000 rpms, flow exceeds O.E. standards, as compared to typical aftermarket water pumps. SKF Water Pumps achieve superior hydraulic performance not only under normal driving conditions, but in stalled and high-speed traffic as well. Typical aftermarket brands fall far short of SKF flow standards.

www.bergab.ru Берг АБ bergab@ya.ru Тел. (495)-228-06-21, факс (495) 223-3071

Product support.

Building the brand through advertising

SKF maintains a strong presence in automotive trade journals that reach your customers and your customers' customers. These ads inform garage owners of the benefits of installing SKF Aquamax water pumps.

Point-of-sale materials

Point-of-sale materials like these posters for SKF water pump kits help to build sales by reminding your customers and your customers' customers that SKF is the most trusted brand of water pumps in the world.

www.bergab.ru Берг АБ bergab@ya.ru Тел. (495)-228-06-21, факс (495) 223-3071

www.bergab.ru Берг АБ bergab@ya.ru Тел. (495)-228-06-21, факс (495) 223-3071

Promotional flyers and pamphlets

SKF products are introduced and shown to your customers with flyers and pamphlets. Those shown here were produced to introduce SKF's line of Aquamax water pump kits.

The high visibility of Formula One racing

For over 50 years, SKF products and expertise have helped make Ferrari a formidable force in Formula One racing. This year's Ferrari car has more than 150 SKF components!

Official Supplier

Scuderia Ferrari

www.bergab.ru Берг АБ bergab@ya.ru Тел. (495)-228-06-21, факс (495) 223-3071

Новые водяные помпы

VKPA 82248	FIAT	Cinquecento
VKPA 83431	CITROEN	Jumpy
	FIAT	Scudo
	PEUGEOT	Expert
VKPA 83432	CITROEN	Jumpy
	FIAT	Scudo
	PEUGEOT	Expert
VKPC 81412	SKODA	Felicia
VKPC 81416	SKODA	Fabia Diesel
VKPC 81417	AUDI	A2 Turbo Diesel
	SEAT	Arosa Turbo Diesel
	SKODA	Fabia Turbo Diesel
	VOLKSWAGEN	Lupo Turbo Diesel / Polo Turbo Diesel
VKPC 81419	VOLKSWAGEN	Bora / Golf IV / Lupo / Polo
VKPC 81622	SEAT	Toledo II
	VOLKSWAGEN	Bora / Golf IV / Golf Variant / Passat / Passat Syncro
VKPC 81623	AUDI	A3 Turbo Diesel
	SEAT	Cordoba / Cordoba Vario / Ibiza / Leon / Toledo II
	SKODA	Octavia Diesel & Turbo Diesel
	VOLKSWAGEN	Beetle / Bora / Golf IV / Golf Syncro / Golf Variant / Polo Classic / Polo Variant
VKPC 81626	AUDI	A3 / A3 Quattro / A4 / A4 Quattro / A4 Avant / A4 Avant Quattro / S4 / A6 / A6 Avant
	FORD	Galaxy Turbo Diesel
	SEAT	Alhambra Turbo Diesel
	VOLKSWAGEN	Bora / Golf IV / Passat / Passat Syncro / Sharan
VKPC 81806	AUDI	100 / V8
VKPC 81807	AUDI	A6 / S6 / A8 / S8
VKPC 81811	AUDI	A4 Quattro / A4 Avant Quattro / S4 / RS4 / A6 / A6 Avant / A6 Allroad
VKPC 82250	FIAT	Dolbo / Punto / Seicento / Strada
	LANCIA	Epsilon
VKPC 82810	CHRYSLER	Voyager Turbo Diesel / Grand Voyager Turbo Diesel
	FORD	Granada Diesel / Scorpio Diesel
	OPEL	Frontera Turbo Diesel
	RENAULT	Jeep Cherokee Turbo Diesel / Jeep Grand Cherokee Turbo Diesel
	VAUXHALL	Frontera Turbo Diesel
VKPC 83637	CITROEN	Xantia / XM
	PEUGEOT	406
VKPC 83639	CITROEN	C5 / Evasion / Jumpy / Xantia / Xsara
	FIAT	Scudo Diesel / Ulysse Turbo Diesel
	LANCIA	Zeta Turbo Diesel
	PEUGEOT	Partner / 206 / 306 / 307 / 406 / 607 / 806 / 807
VKPC 84216	FORD	Ka
	MAZDA	121
VKPC 84415	FORD	Cougar / Focus / Mondeo
VKPC 84416	FORD	Focus Turbo Diesel
VKPC 85220	OPEL	Astra / Corsa B / Tigra
VKPC 85410	OPEL	Corsa A / Corsa B / Tigra
	VAUXHALL	Corsa B Diesel & Turbo Diesel
VKPC 85623	OPEL	Astra II Turbo Diesel / Frontera Turbo Diesel / Omega B Turbo Diesel / Sintra Turbo Diesel / Vectra Turbo Diesel / Zafira Turbo Diesel
	SAAB	9-3 Turbo Diesel
VKPC 85624	OPEL	Astra / Vectra B / Zafira
VKPC 86416	RENAULT	Clio / Laguna
VKPC 88206	MERCEDES	Classe A / Classe A Turbo Diesel
VKPC 88631	MERCEDES	C200 / C230 / CLK 200 / CLK 230 / E 200 / ML E23 / SL 200 / SL 230
VKPC 88632	BMW	320 Turbo Diesel
VKPC 88842	MERCEDES	250 / 300 / C250 / E250 / E300 / G300 / GD350 / S300 / S350 / SD300
VKPC 88843	MERCEDES	C200 TURBO DIESEL / C220 TURBO DIESEL / C 270 TURBO DIESEL
VKPC 88844	MERCEDES	E200 / E230 / Vito
VKPC 88845	MERCEDES	E200 / E230 / Vito
VKPC 88846	MERCEDES	C240 / C280 / C430 / CLK320 / CLK430 / E240 / E280 / E320 / E430 / E550 / G320 / G500 / ML430 / SL500
VKPC 88848	SMART	600/800 Turbo-Diesel
VKPC 91442	TOYOTA	Celica
VKPC 93210	HONDA	Civic / Ballade

Удаленные наборы водяных помп

VKPA 82413	FIAT
VKPA 86209	RENAULT
VKPA 91404	TOYOTA
VKPA 91415	TOYOTA
VKPA 91612	TOYOTA
VKPC 86412	RENAULT
VKPC 88847	MERCEDES

Набор водяных помп VKPA содержит:

1 водяная помпа + 1 пристраев. корпус + доп. детали

Набор водяных помп VKPC содержит:

1 водяная помпа+ дополнительные детали

Набор водяных помп VKMC содержит:

1 зубч. ремень 0 или 1 направляющий ролик

1 водяная помпа Инструкции по монтажу

Прибор СКФ для проверки натяжения ремня TensiCheck ('Тензичек')

Цифровой прибор СКФ дает информацию по следующим важным характеристикам:

- Измерение натяжения как зубчатого так и поликлинового ремней
- Индикация точного натяжения ремня
- Подтверждение, что натяжение правильно для нового ремня, смонтированного на двигателе.

www.bergab.ru Берг АБ bergab@ya.ru Тел. (495)-228-06-21, факс (495) 223-3071

Разделы каталога по маркам автомобилей

ALFA ROMEO 12
AUDI 14
BEDFORD 20
BMW 20
CHRYSLER 24
CITROEN 24
CITROEN 27
DACIA 28
DAEWOO. 28
DAIHATSU 28
FIAT 29
FIAT 35
FORD 37
FORD 41
HONDA 42
HYUNDAI. 44
INNOCENTI 45
ISUZU 45
IVECO 46
KIA. 46
LADA 46
LANCIA 47
LOTUS. 49
MAZDA 49
MAZDA 51
MERCEDES-BENZ 51
MERCEDES-BENZ 60
MITSUBISHI 62
MITSUBISHI 64
NISSAN 65
NISSAN 68
OPEL 68
PEUGEOT 75
PEUGEOT 79
POLSKI 80
PORSCHE 80
PROTON 80
RENAULT 80
RENAULT 87
ROVER 88
SAAB 90
SEAT 91
SEAT 94
SKODA 94
SMART 95
SUBARU 95
SUZUKI 96
TALBOT 97
TOYOTA 98
TOYOTA 103
VAUXHALL 105
VOLKSWAGEN 109
VOLKSWAGEN 115
VOLVO. 116
ZASTAVA/YUGO 118

www.bergab.ru Берг АБ bergab@ya.ru Тел. (495)-228-06-21, факс (495) 223-3071

www.bergab.ru Берг АБ bergab@ya.ru Тел. (495)-228-06-21, факс (495) 223-3071

ALFA ROMEO

ALFASUD

1.2	AS 30100/02/04 - 1186 cc	72 → 76	VKPC 82200
1.2	AS 30100/02/04 - 1186 cc	76 → 84	**VKPC 82201**
1.3	AS 30156/30164/30168 - 1351 cc	76 → 84	**VKPC 82201**
1.5	AS 30124/26/28/33/98 - 1490 cc	76 → 84	**VKPC 82201**
1.5	AR 30146/82/98 - 1490 cc	79 → 89	**VKPC 82201**
1.5	AR 30520/26 - 1490 cc	79 → 89	**VKPC 82201**
1.7	AR 30550/58 - 1712 cc	79 → 89	**VKPC 82201**

ALFETTA

1.6	AR 01600 - 1570 cc	70 → 85	**VKPC 82621**
1.8	AR 01678 - 1779 cc	70 → 85	**VKPC 82621**
2.0	AR 01334 - 1962 cc	70 → 85	**VKPC 82621**
2.0 GTV	016 / 017 - 1962 cc	82 → 85	**VKPC 82621**
2.0 GTV	AR 06212 - 1962 cc	70 → 85	**VKPC 82621**
2.5 GTV 6 (116C00)	AR 01646/01911 - 2492 cc	81 → 87	VKPC 82633
2.4 TURBO DIESEL (116B30)	VM4HT/2.4 - 2393 cc	70 → 85	**VKPC 82623**

ARNA

1.2 (920 A)	AR 31000/AR 20500 - 1186 cc	83 → 87	**VKPC 82201**
1.3 (920 A)	AR 31006/10/512 - 1351 cc	83 → 87	**VKPC 82201**
1.5 (920 A)	AR 31016 - 1490 cc	83 → 87	**VKPC 82201**

GIULIETTA

1.3	AR 01644 - 1357 cc	80 → 86	**VKPC 82621**
1.6	AR 01600 - 1570 cc	80 → 86	**VKPC 82621**
1.8	AR 01608/78 - 1779 cc	80 → 86	**VKPC 82621**
2.0	AR 01655 - 1962 cc	84 → 86	**VKPC 82621**
2.0 TURBO	AR 01699 - 1962 cc	78 → 86	**VKPC 82621**
2.0 TURBO DIESEL	VM488HT - 1962 cc	83 → 86	**VKPC 82623**
2.0 TURBO DIESEL	VM4HT/2 - 1995 cc	83 → 86	VKPC 82635

GTV

1.6 (11605)	016 - 1570 cc	77 → 83	**VKPC 82621**
1.8 (116540)	016 - 1779 cc	77 → 83	**VKPC 82621**
1.8 16V (916C3)	AR 32201 - 1779 cc	98 →	**VKPC 82645**
2.0 (11317, 11318, 11659, 11660)	AR 01623/AR 01655/AR 06212 - 1962 cc	81 → 87	**VKPC 82621**
2.0 16V (916C2)	AR 16201 - 1998 cc	95 →	**VKPC 82645**
2.0 TURBO (116360, 116370, 116900)	016/017/6212 - 1962 cc	77 → 87	**VKPC 82621**
2.5 (11315, 11316, 11646, 11673)	AR 01646 - 2492 cc	81 → 87	VKPC 82633
2.5 (11368)	AR 01911 - 2492 cc	81 → 87	VKPC 82633

35 AR

AR6 2.5 TURBO DIESEL	8144.21 - 2445 cc	87 →	**VKPC 82600**
AR8 2.5 TURBO DIESEL	8144.61 - 2445 cc	78 →	**VKPC 82630**

ALFA 6

2.0	AR 01932 - 1996 cc	79 → 87	VKPC 82633
2.5	AR 01913/28 - 2492 cc	79 → 87	VKPC 82633
2.5 TURBO DIESEL	VM5HT/2.5 - 2494 cc	79 → 87	**VKPC 82623**

ALFA 33

1.2 (905A0)	AR 30585/00 - 1186 cc	83 → 89	**VKPC 82201**

www.bergab.ru Берг АБ bergab@ya.ru Тел. (495)-228-06-21, факс (495) 223-3071

www.bergab.ru Берг АБ bergab@ya.ru Тел. (495)-228-06-21, факс (495) 223-3071

1.3 (905A1)	AR 30502/86/87/AS 30168-1350 cc	83 → 89		**VKPC 82201**	
1.5 (905A2)	AR 30504/08/14/20/88 - 1490 cc	83 → 89		**VKPC 82201**	
1.7 (905A3)	AR 30550/58 - 1712 cc	83 → 89		**VKPC 82201**	
1.8 TURBO DIESEL (905A4)	VM 82A - 1779 cc	07/88 → 10/89		VKPC 82423	
ALFA NUOVA 33					
1.2 (907A4)	AR 30743 - 1186 cc	89 → 92		**VKPC 82201**	
1.3 (907A3, 907B3)	AR 30732 - 1351 cc	89 → 94		**VKPC 82201**	
1.3 i.e (907A3A, 907A3B, 907B3A)	AR 30753/55 - 1351 cc	90 → 95		**VKPC 82201**	
1.5 (907A2)	AR 30734 - 1490 cc	89 → 94		**VKPC 82201**	
1.5 i.e (907A2A, 907A2B, 907B2A)	AR 30738/50/51 - 1490 cc	90 → 94		**VKPC 82201**	
1.7 i.e (907A1, 907B1)	AR 30736/37/40/46/47 - 1712 cc	90 → 94		**VKPC 82201**	
1.8 TURBO DIESEL (907A5, 907B5)	VM 96A - 1779 cc	10/89 → 94		**VKPC 82642**	
ALFA 75					
1.6 i.e (162B2D, 162B2E)	AR 61101/61102 - 1570 cc	85 → 92		**VKPC 82621**	
1.8 i.e (162B1H, 162B1L)	AR 61201/6122 - 1779 cc	89 → 92		**VKPC 82621**	
2.0 TWS (162B4)	AR 06224 - 1962 cc	87 → 92		**VKPC 82621**	
2.5 (162B3)	AR 01911/01646 - 2492 cc	85 → 87		VKPC 82633	
3.0 (162B6)	AR 06120/4 - 2997 cc	87 → 89		VKPC 82633	
3.0 (16200)	AR 61503 - 2997 cc	89 → 92		**VKPC 82800**	
2.0 TURBO DIESEL	VM 488 HT - 1995 cc	85 →		**VKPC 82623**	
2.0 TURBO DIESEL (162B)	VM 80A - 1995 cc	88 → 92		VKPC 82635	
2.4 TURBO DIESEL (162B5)	VM 81A - 2393 cc	88 → 92		VKPC 82635	
ALFA 90					
1.8	AR 06202 - 1779 cc	84 → 87		**VKPC 82621**	
2.0	AR 06218/19/26 - 1962 cc	84 → 87		**VKPC 82621**	
2.0	AR 06210 - 1962 cc	84 → 87		VKPC 82633	
2.0 i.e	AR 01713/01/01789 - 1962 cc	84 → 87		**VKPC 82621**	
2.5	AR 01646 - 2492 cc	84 → 87		VKPC 82633	
2.4 TURBO DIESEL (162A30)	VM 06206/VM81A - 2393 cc	84 → 87		VKPC 82633	
2.4 TURBO DIESEL (162A30)	VM 06206/VM81A - 2393 cc	87 →		VKPC 82635	
ALFA 145					
1.3 (930A3)	AR 33501 - 1351 cc	94 → 10/96		**VKPC 82201**	
1.4 16V (930A3)	AR 33503 - 1370 cc	11/96 →		**VKPC 82645**	
1.6 (930A2)	AR 33201 - 1596 cc	94 → 10/96		**VKPC 82201**	
1.6 16V (930A2B)	AR 67601 - 1598 cc	10/96 →		VKPC 82451	
1.7 16V (930A1)	AR 33401 - 1712 cc	94 → 10/96		**VKPC 82201**	
1.8 16V (930A1)	AR 67106 - 1747 cc	10/96 →		**VKPC 82645**	
1.8 16V (930A1)	AR 32201 - 1747 cc	10/96 →		**VKPC 82645**	
1.9 16V (930A1A)	AR 67199 - 1900 cc	10/96 →	BR	**VKPC 82645**	
2.0 16V (930A5)	AR 32301/AR 67204 - 1998 cc	10/96 →		**VKPC 82645**	
1.9 TURBO DIESEL (930A4)	AR 67501 - 1929 cc	94 → 09/96		**VKPC 82618**	**VKPA 82618**
1.9 TURBO DIESEL (930A4)	AR 33601/AR 67501 - 1929 cc	10/96 → 99			**VKPA 82666**
1.9 JTD TURBO DIESEL (930)	AR 32302 - 1929 cc	99 →		**VKPC 82665**	
ALFA 146					
1.3 (930B3)	AR 33501 - 1351 cc	94 → 10/96		**VKPC 82201**	
1.4 16V (930B3)	AR 33503 - 1370 cc	10/96 →		**VKPC 82645**	
1.6 (930B2)	AR 33201 - 1596 cc	94 → 10/96		**VKPC 82201**	
1.6 16V (930B3A)	AR 67601 - 1598 cc	10/96 →		VKPC 82451	
1.7 16V (930B1)	AR 33401 - 1712 cc	94 → 10/96		**VKPC 82201**	
1.8 16V (930B1)	AR 67106 - 1747 cc	10/96 →		**VKPC 82645**	
1.8 16V (930B1)	AR 32201 - 1747 cc	10/96 →		**VKPC 82645**	
1.9 16V (930B1A)	AR 67199 - 1900 cc	10/96 →	BR	**VKPC 82645**	
2.0 16V (930B5)	AR 67204 - 1998 cc	10/96 →		**VKPC 82645**	
2.0 16V (930B5)	AR 32301 - 1998 cc	10/96 →		**VKPC 82645**	
1.9 TURBO DIESEL (930B4)	AR 67501 - 1929 cc	94 → 09/96		**VKPC 82618**	**VKPA 82618**

www.bergab.ru Берг АБ bergab@ya.ru Тел. (495)-228-06-21, факс (495) 223-3071

www.bergab.ru Берг АБ bergab@ya.ru Тел. (495)-228-06-21, факс (495) 223-3071

ALFA ROMEO .../...

1.9 TURBO DIESEL (930B4)	AR 33601/AR 67501 - 1929 cc	10/96 → 99		VKPA 82666
1.9 JTD TURBO DIESEL (930)	AR 32302 - 1929 cc	99 →	VKPC 82665	

ALFA 147

1.6 16V (937AX)	AR 32104/AR 37203 - 1598 cc	00 →	VKPC 82645	
2.0 16V (937AX)	AR 32310 - 1998 cc	00 →	VKPC 82645	
1.9 JTD TURBO DIESEL (937AX)	AR 37101 - 1929 cc	00 →	VKPC 82665	

ALFA 155

1.6 16V (167A6A)	AR 67601 - 1598 cc	96 →	VKPC 82451	
1.7 (167A4H, 167A4B)	AR 67103/105 - 1748 cc	87 → 96	VKPC 82436	
1.8 TWS (167A4)	AR 67101/102 - 1773 cc	87 → 96	VKPC 82436	
1.8 TWS (167A4)	AR 67106 - 1773 cc	96 →	VKPC 82645	
2.0 TWS (167A2)	AR 67201/202 - 1995 cc	87 → 96	VKPC 82436	
2.0 T.S 16V (167A2G)	AR 67204 - 1998 cc	96 →	VKPC 82645	
2.0 TURBO 4x4 (167A2)	AR 67203 - 1995 cc	02/92 → 04/96	VKPC 82660	
1.9 TURBO DIESEL (167A3)	AR 67501 - 1929 cc	09/92 → 96	VKPC 82618	VKPA 82618
1.9 TURBO DIESEL (167A3)	AR 33601/AR 67501 - 1929 cc	96 → 97		VKPA 82666
2.5 TURBO DIESEL (167A1A, 167A1G)	VM07B / VM31B - 2499 cc	09/92 → 95	VKPC 82642	

ALFA 156

1.6 16V (932A4)	AR 32101 - 1598 cc	07/97 →	VKPC 82451	
1.8 16V (932A3)	AR 32201 - 1747 cc	07/97 →	VKPC 82645	
2.0 16V (932A2)	AR 32301 - 1970 cc	07/97 →	VKPC 82645	
1.9 JTD TURBO DIESEL	AR 32302 - 1929 cc	07/97 →	VKPC 82665	
2.4 JTD TURBO DIESEL (932A1)	AR 32501 - 2387 cc	07/97 →	VKPC 82665	

ALFA 164

2.0 i.e TWS (164A2)	AR 06420 / AR 06416 - 1962 cc	87 → 92	VKPC 82632	
2.0 i.e TWS (164H3)	AR 06103 - 1962 cc	87 →	VKPC 82436	
2.0 TURBO 4Cyl (164A2B)	AR 06476 - 1996 cc	88 → 92	VKPC 82614	
2.0 TURBO (164A2F, 164A2G, 164K3)	AR 64101 / AR 64102 - 1996 cc	90 → 95	VKPC 82800	
2.0 TURBO (164K3)	AR 64102 - 1996 cc	95 →	VKPC 82800	
3.0 (164K1B)	AR 06410/12 - 2959 cc	87 → 92	VKPC 82800	
3.0 (164A00, 164H1A, 164H1B)	AR 64301/ AR 64305 - 2959 cc	88 → 93	VKPC 82800	
3.0 12V (164H1)	AR 64305 - 2959 cc	95 →	VKPC 82800	
3.0 12V (164K1)	AR 66303 - 2959 cc	95 →	VKPC 82800	
2.5 TURBO DIESEL (164A10)	VM84A - 2445 cc	→ 10/89	VKPC 82636	
2.5 TURBO DIESEL (164A10)	VM84A - 2445 cc	10/89 →	VKPC 82642	
2.5 TURBO DIESEL (167K2A, 164K2B)	VM08B / VM32B - 2499 cc	10/89 → 03/95	VKPC 82642	
2.5 TURBO DIESEL (167A1A)	VM07B / VM31B - 2499 cc	10/89 → 09/92 ...→CH 0012320	VKPC 82642	

ALFA 166

2.0 16V (936A3)	AR 34103 - 1962 cc	98 →	VKPC 82645	
2.4 JTD TURBO DIESEL (936A2)	AR 34202 - 2387 cc	98 →	VKPC 82665	

AUDI

AUDI 50

1.1	HB/HC/HD - 1093 cc	74 → 83	VKPC 81200	VKMC 01100
1.3	HH/HJ - 1272 cc	77 → 83	VKPC 81200	VKMC 01100

www.bergab.ru Берг АБ bergab@ya.ru Тел. (495)-228-06-21, факс (495) 223-3071

www.bergab.ru Берг АБ bergab@ya.ru Тел. (495)-228-06-21, факс (495) 223-3071

AUDI 80				
1.3	EP - 1297 cc	72 → 08/78	**VKPC 81400**	**VKPA 81400**
1.3	FY/FZ - 1297 cc	09/78 → 07/81	**VKPC 81200**	**VKMC 01100**
1.3	EP - 1297 cc	08/81 → 84	**VKPC 81401**	**VKPA 81401**
1.6	YG/YH/YK/YN/YP/YS/YT/YY/WP/WY/ WZ - 1588/1595 cc	72 → 78	**VKPC 81400**	**VKPA 81400**
1.6	YG/YH/YK/YN/YP/YS/YT/YY/WP/WY/ WZ - 1588/1595 cc	78 → 88	**VKPC 81401**	**VKPA 81401**
1.6	DT/JK/JU/PP/RN/RNA/SA/WV/YP/YZ - 1588/1595 cc	78 → 91	**VKPC 81401**	**VKPA 81401**
1.6	AAB - 1595 cc	90 → 91	**VKPC 81401**	**VKPA 81401**
1.6	ABB/ABM/ADA - 1595 cc	91 → 07/95	**VKPC 81401**	**VKPA 81401**
1.7	WT-1700 cc	80 → 81	**VKPC 81400**	**VKPA 81400**
1.7	WT-1700 cc	81 → 83	**VKPC 81401**	**VKPA 81401**
1.8	DS/DZ/JN/JV/MU/NE/PM/PV/RU/SF - 1781 cc	82 → 91	**VKPC 81401**	**VKPA 81401**
1.9 E	WN - 1921 cc	82 → 84	**VKPC 81605**	VKMC 01030
1.9 E	SD - 1921 cc	86 → 88	**VKPC 81401**	**VKPA 81401**
2.0 16V	3A/AAD/6A - 1984 cc	88 → 91	**VKPC 81401**	**VKPA 81401**
2.0	HP/JL/JS/SK/PS - 1994 cc	82 → 89	**VKPC 81605**	**VKMC 01031**
2.0	HP/JL/JS/SK/PS - 1994 cc	90 → 91	**VKPC 81606**	**VKMC 01032**
2.0 16V	ABK/ABT/ACE/6A - 1984 cc	91 → 07/95	**VKPC 81401**	**VKPA 81401**
2.2	WE - 2144 cc	→ 84	**VKPC 81605**	
2.2	HY/KV/KX - 2226 cc	84 → 91	**VKPC 81605**	**VKMC 01031**
2.2	NG - 2226 cc	87 → 10/88	**VKPC 81605**	**VKMC 01031**
2.2	NG/7A - 2226 cc	10/88 → 91	**VKPC 81606**	**VKMC 01032**
2.3	NG - 2309 cc	91 → 11/94	**VKPC 81612**	
2.6	ABC/ACZ - 2598 cc	91 → 07/95	**VKPC 81800**	
2.8	AAH - 2771 cc	91 → 07/95	**VKPC 81800**	
1.6 DIESEL	CR - 1588 cc	80 → 81	**VKPC 81400**	**VKPA 81400**
1.6 DIESEL	CR - 1588 cc	81 → 82	**VKPC 81401**	**VKPA 81401**
1.6 DIESEL	CT/JK/JKA - 1588 cc	82 → 89	**VKPC 81401**	**VKPA 81401**
1.6 TURBO DIESEL	CY/RA/SB - 1588 cc	84 → 91	**VKPC 81401**	**VKPA 81401**
1.9 DIESEL	1Y - 1896 cc	89 → 91	**VKPC 81401**	**VKPA 81401**
1.9 TURBO DIESEL	AAZ/1Z - 1896 cc	91 → 07/95	**VKPC 81401**	**VKPA 81401**
AUDI 80 QUATTRO				
1.8	DZ/JN/JV/MU/NE/PM/PV/SF - 1781 cc	08/84 → 09/91	**VKPC 81401**	**VKPA 81401**
1.9 E	SD - 1921 cc	09/86 → 07/88	**VKPC 81401**	**VKPA 81401**
2.0 16V	3A/AAD/6A - 1984 cc	08/88 → 09/91	**VKPC 81401**	**VKPA 81401**
2.0 16V	ABK/ACE/ADW/6A - 1984 cc	09/91 → 07/95	**VKPC 81401**	**VKPA 81401**
2.0 20V	NM - 1984 cc	01/88 → 09/91	**VKPC 81606**	
2.2	KK/KL - 2144 cc	82 → 84	**VKPC 81605**	
2.2	HY/JT/KV - 2226 cc	08/84 → 03/87	**VKPC 81605**	**VKMC 01031**
2.2 20V	NG/KV - 2226 cc	04/87 → 88	**VKPC 81605**	**VKMC 01031**
2.2 20V	NG/KV/7A - 2226 cc	88 → 09/91	**VKPC 81606**	**VKMC 01032**
2.2	ABY - 2226 cc	02/93 → 07/95	**VKPC 81612**	
2.3	NG - 2309 cc	09/91 → 11/94	**VKPC 81612**	
2.6	ABC/ACZ - 2598 cc	07/92 → 06/94	**VKPC 81800**	
2.6	ABC/ACZ - 2598 cc	07/94 → 07/95	**VKPC 81802**	
2.8	AAH - 2771 cc	09/91 → 06/94	**VKPC 81800**	
2.8	AAH - 2771 cc	07/94 → 07/95	**VKPC 81802**	
AUDI 90				
1.3	EP - 1297 cc	72 → 08/78	**VKPC 81400**	**VKPA 81400**
1.3	FY/FZ - 1297 cc	09/78 → 07/81	**VKPC 81200**	**VKMC 01100**
1.3	EP - 1297 cc	08/81 → 84	**VKPC 81401**	**VKPA 81401**
1.6	YG/YH/YK/YN/YP/YS/YT/YY/WP/WY/ WZ - 1588/1595 cc	72 → 78	**VKPC 81400**	**VKPA 81400**
1.6	YG/YH/YK/YN/YP/YS/YT/YY/WP/WY/ WZ - 1588/1595 cc	78 → 88	**VKPC 81401**	**VKPA 81401**
1.6	DT/JK/JU/PP/RN/RNA/SA/WV/YP/YZ - 1588/1595 cc	78 → 91	**VKPC 81401**	**VKPA 81401**
1.6	AAB - 1595 cc	90 → 91	**VKPC 81401**	**VKPA 81401**
1.6	ABB/ABM/ADA - 1595 cc	91 →	**VKPC 81401**	**VKPA 81401**

www.bergab.ru Берг АБ bergab@ya.ru Тел. (495)-228-06-21, факс (495) 223-3071

AUDI .../...

1.7	WT-1700 cc	80 → 81	**VKPC 81400**	**VKPA 81400**
1.7	WT-1700 cc	81 → 83	**VKPC 81401**	**VKPA 81401**
1.8	DS/DZ/JN/JV/MU/NE/PM/PV/RU/SF - 1781 cc	82 → 91	**VKPC 81401**	**VKPA 81401**
1.9 E	WN - 1921 cc	82 → 84	**VKPC 81605**	VKMC 01030
1.9 E	SD - 1921 cc	86 → 88	**VKPC 81401**	**VKPA 81401**
2.0	HP/JL/JS/SK/PS - 1994 cc	82 → 89	**VKPC 81605**	**VKMC 01031**
2.0	HP/JL/JS/SK/PS - 1994 cc	90 → 91	**VKPC 81606**	**VKMC 01032**
2.0 16V	3A/AAD/6A - 1984 cc	88 → 91	**VKPC 81401**	**VKPA 81401**
2.2	WE - 2144 cc	→ 84	**VKPC 81605**	
2.2	HY/KV/KX - 2226 cc	84 → 91	**VKPC 81605**	**VKMC 01031**
2.2	NG - 2226 cc	87 → 10/88	**VKPC 81605**	**VKMC 01031**
2.2	NG/7A - 2226 cc	10/88 → 91	**VKPC 81606**	**VKMC 01032**
1.6 DIESEL	CR - 1588 cc	80 → 81	**VKPC 81400**	**VKPA 81400**
1.6 DIESEL	CR - 1588 cc	81 → 82	**VKPC 81401**	**VKPA 81401**
1.6 DIESEL	CT/JK/JKA - 1588 cc	82 → 89	**VKPC 81401**	**VKPA 81401**
1.6 TURBO DIESEL	CY/RA/SB - 1588 cc	84 → 91	**VKPC 81401**	**VKPA 81401**
1.9 DIESEL	1Y - 1896 cc	89 → 91	**VKPC 81401**	**VKPA 81401**
1.9 TURBO DIESEL	AAZ/1Z - 1896 cc	91 →	**VKPC 81401**	**VKPA 81401**

AUDI 90 QUATTRO

1.8	DZ/JN/JV/MU/NE/PV/SF - 1781 cc	82 → 91	**VKPC 81401**	**VKPA 81401**
1.9 E	SD - 1921 cc	86 → 07/88	**VKPC 81401**	**VKPA 81401**
2.0 16V	3A/AAD/6A - 1984 cc	88 → 91	**VKPC 81401**	**VKPA 81401**
2.0 20V	NM - 1984 cc	88 → 91	**VKPC 81606**	
2.2	KK/KL - 2144 cc	82 → 84	**VKPC 81605**	
2.2	HY/JT - 2226 cc	84 → 87	**VKPC 81605**	**VKMC 01031**
2.2 20V	NG/KV/7A - 2226 cc	86 → 88	**VKPC 81605**	**VKMC 01031**
2.2 20V	NG/KV/7A - 2226 cc	88 → 91	**VKPC 81606**	**VKMC 01032**
2.3	NG - 2309 cc	91 →	**VKPC 81612**	

AUDI 100 / 100 AVANT

1.6	YV - 1588 cc	76 → 03/81	**VKPC 81400**	**VKPA 81400**
1.6	YV - 1588 cc	04/81 →	**VKPC 81401**	**VKPA 81401**
1.6	ABB - 1588 cc	03/92 →	**VKPC 81401**	**VKPA 81401**
1.8	4B/DR/DS/JW/NP/PH/RS/SH - 1781cc	83 →	**VKPC 81401**	**VKPA 81401**
1.9	WH - 1921 cc	→ 08/82	**VKPC 81605**	VKMC 01030
2.0	WA/WF - 1984 cc	76 → 78	**VKPC 81601**	
2.0	RT - 1994 cc	84 → 88	**VKPC 81605**	**VKMC 01031**
2.0	RT - 1994 cc	88 → 11/90	**VKPC 81606**	**VKMC 01032**
2.0	AAD/AAE/ABK/ACE - 1984 cc	12/90 → 07/94	**VKPC 81401**	**VKPA 81401**
2.0	ADW - 1984 cc	12/93 → 07/94	**VKPC 81401**	**VKPA 81401**
2.1	WB/WC/WE/WU/WG - 2144 cc	82 → 84	**VKPC 81605**	VKMC 01030
2.1	WB/WC/WE/WU/WG - 2144 cc	84 → 88	**VKPC 81605**	**VKMC 01031**
2.2	HX/KU/KZ - 2226 cc	10/86 → 07/88	**VKPC 81605**	**VKMC 01031**
2.2	HX/KU/KZ - 2226 cc	08/88 →	**VKPC 81606**	**VKMC 01032**
2.2	ANN - 2226 cc	91 →	**VKPC 81612**	
2.3 (AAR2/AAR4)	AAR - 2309 cc	12/90 → 07/94	**VKPC 81612**	
2.3 TURBO	NF/MC - 2309 cc	10/86 → 07/88	**VKPC 81605**	**VKMC 01031**
2.3 TURBO	NF/MC - 2309 cc	08/88 →	**VKPC 81606**	**VKMC 01032**
2.6 (ABC2)	ABC/ACZ - 2598 cc	04/92 → 07/94	**VKPC 81800**	
2.8 (AAH2/AAH4)	AAH - 2771cc	12/90 → 07/94	**VKPC 81800**	
4.2 32V	ABH - 4172 cc	91 → 94	**VKPC 81806**	
2.0 DIESEL	CN - 1986 cc	78 → 88	**VKPC 81602**	**VKMC 01040**
2.0 TURBO DIESEL	DE - 1986 cc	81 → 87	**VKPC 81602**	**VKMC 01040**
2.0 TURBO DIESEL	NC - 1986 cc	→ 90	**VKPC 81602**	**VKMC 01040**
2.0 TURBO DIESEL	NC - 1986 cc	90 →	**VKPC 81603**	
2.4 DIESEL	3D - 2370 cc	→ 90	**VKPC 81602**	
2.4 DIESEL	3D - 2370 cc	90 →	**VKPC 81603**	
2.5 TURBO DIESEL	1T/AAT/ABP - 2460 cc	06/91 → 07/94	**VKPC 81805**	

www.bergab.ru Берг АБ bergab@ya.ru Тел. (495)-228-06-21, факс (495) 223-3071

AUDI 100 QUATTRO					
1.8	4B/JW/NP/PH/SH - 1781 cc	85 → 94		**VKPC 81401**	**VKPA 81401**
2.0	AAD - 1984 cc	91 → 94		**VKPC 81401**	**VKPA 81401**
2.2	MC/HX/KU/PX - 2226 cc	85 → 03/88		**VKPC 81605**	**VKMC 01031**
2.2	MC/HX/KU/PX - 2226 cc	04/88 → 94		**VKPC 81606**	**VKMC 01032**
2.3	NF - 2309 cc	85 → 03/88		**VKPC 81605**	**VKMC 01031**
2.3	NF - 2309 cc	04/88 → 94		**VKPC 81606**	**VKMC 01032**
AUDI 200					
2.1	JY/KG/KH/KJ/WC/WJ/WK/WS - 2144 cc	→ 85	→|CH 44-E-012000	**VKPC 81605**	VKMC 01030
2.1	JY/KG/KH/KJ/WC/WJ/WK/WS - 2144 cc	→ 85	|→CH 44-E-012001	**VKPC 81605**	**VKMC 01031**
2.2	KU - 2226 cc	84 → 85		**VKPC 81605**	**VKMC 01031**
2.2	1B/2B/MC - 2226 cc	→ 04/88		**VKPC 81605**	**VKMC 01031**
2.2	1B/2B/MC - 2226 cc	05/88 → 91		**VKPC 81606**	**VKMC 01032**
AUDI 200 QUATTRO					
2.1	JY/KG - 2144 cc	84 → 87		**VKPC 81605**	
2.2	1B/MC - 2226 cc	→ 04/88		**VKPC 81605**	**VKMC 01031**
2.2	1B/MC - 2226 cc	05/88 → 91		**VKPC 81606**	**VKMC 01032**
2.3	3B - 2309 cc	→ 04/88		**VKPC 81605**	**VKMC 01031**
2.3	3B - 2309 cc	05/88 → 91		**VKPC 81606**	**VKMC 01032**
AUDI CABRIOLET					
1.8	ADR - 1781 cc	08/91 →		**VKPC 81402**	**VKPA 81402**
2.0	ABK/ACE - 1984 cc	08/91 →		**VKPC 81401**	**VKPA 81401**
2.3	NG - 2300 cc	08/91 →		**VKPC 81612**	
2.6	ABC/ACZ - 2598 cc	08/91 →	→|CH 8G-S-001302	**VKPC 81800**	
2.6	ABC/ACZ - 2598 cc	08/91 →	|→CH 8G-S-001303	**VKPC 81802**	
2.8	AAH - 2771 cc	08/91 →	→|CH 8G-S-001302	**VKPC 81800**	
2.8	AAH - 2771 cc	08/91 →	|→CH 8G-S-001303	**VKPC 81802**	
1.9 TURBO DIESEL	1Z/AHU - 1896 cc	08/91 →		**VKPC 81401**	**VKPA 81401**
AUDI COUPE / COUPE QUATTRO					
1.6	YN - 1588 cc	75 → 81		**VKPC 81400**	**VKPA 81400**
1.8	DS/DZ/DD/JN/JV/PV/SF - 1781 cc	75 →		**VKPC 81401**	**VKPA 81401**
1.9	WN - 1921 cc	81 → 88		**VKPC 81605**	
1.9	WN - 1921 cc	81 → 83			VKMC 01030
2.0	HP/JL/JS/SK - 1994 cc	81 → 88		**VKPC 81605**	
2.0	HP/JL/JS/SK - 1994 cc	81 → 83			VKMC 01030
2.0	HP/JL/JS/SK - 1994 cc	84 → 88			**VKMC 01031**
2.0	NM - 1994 cc	89 →		**VKPC 81606**	
2.0	3A/AAD - 1984 cc	89 →		**VKPC 81401**	**VKPA 81401**
2.0	ABK/ACE - 1984 cc	90 →		**VKPC 81401**	**VKPA 81401**
2.1	KE/KL/WE - 2144 cc	81 → 88		**VKPC 81605**	
2.2	HY/KV/KX - 2226 cc	81 → 04/88		**VKPC 81605**	
2.2	HY/KV/KX - 2226 cc	81 → 83			VKMC 01030
2.2	HY/KV/KX - 2226 cc	84 → 04/88			**VKMC 01031**
2.2	HY/KV/KX/7A - 2226 cc	05/88 →		**VKPC 81606**	**VKMC 01032**
2.2	ABY - 2226 cc	10/88 →		**VKPC 81612**	
2.3	NG - 2300 cc	10/88 →	→|CH 8B-M-033000	**VKPC 81606**	
2.3	NG - 2300 cc	10/88 →	|→CH 8B-M-033001	**VKPC 81612**	
2.3	3B - 2300 cc	10/88 →		**VKPC 81606**	
2.6	ABC - 2598 cc	91 → 06/94		**VKPC 81800**	
2.6	ABC - 2598 cc	07/94 →		**VKPC 81802**	
2.8	AAH - 2771 cc	91 → 06/94		**VKPC 81800**	
2.8	AAH - 2771 cc	07/94 →		**VKPC 81802**	
AUDI SPORT QUATTRO					
2.1	WR - 2144 cc	81 → 04/88		**VKPC 81605**	**VKMC 01031**

www.bergab.ru Берг АБ bergab@ya.ru Тел. (495)-228-06-21, факс (495) 223-3071

AUDI .../...

2.1	WR - 2144 cc	05/88 →	VKPC 81606	VKMC 01032
2.2	GV/MB/WX - 2226 cc	80 → 04/88	VKPC 81605	VKMC 01031
2.2	GV/MB/WX - 2226 cc	05/88 →	VKPC 81606	VKMC 01032
2.2	KW/RR - 2226 cc	89 →	VKPC 81606	VKMC 01032

AUDI TT COUPE / ROADSTER

1.8	AJQ/APP/APX - 1781 cc	99 →	VKPC 81620	

AUDI A2

1.4	AUA - 1390 cc	01 →	VKPC 81407	
1.4 TDI	AMF - 1422 cc	01 →	VKPC 81417	

AUDI A3 / A3 QUATTRO / S3

1.6	AEH/AKL - 1598 cc	09/96 →	VKPC 81408	
1.6	APF/AVU - 1598 cc	07/99 →	VKPC 81408	
1.8	AGN/AGU - 1781 cc	09/96 →	VKPC 81620	
1.8	AJQ/APG/APP/AQA/ARZ - 1781 cc	08/98 →	VKPC 81620	
1.8	ARX/ARY/AUM/AUQ - 1781 cc	01 →	VKPC 81620	
1.8	AMK/APY - 1781 cc	11/98 →	VKPC 81620	
1.9 TDI	AGR/ASV - 1896 cc	09/96 →	VKPC 81623	
1.9 TDI	AHF/ALH - 1896 cc	10/97 →	VKPC 81623	
1.9 TDI	ASZ - 1896 cc	01 →	VKPC 81623	
1.9 TDI	ATD - 1896 cc	01 →	VKPC 81626	

AUDI A4 / A4 AVANT

1.6	ADP - 1598 cc	11/94 →	VKPC 81402	VKPA 81402
1.6	AHL - 1598 cc	95 →	VKPC 81408	
1.6	ANA/ARM - 1598 cc	99 →	VKPC 81408	
1.6	AEH/AKL - 1598 cc	09/96 →	VKPC 81408	
1.8	ADR/AFY - 1781 cc	11/94 →	VKPC 81402	VKPA 81402
1.8	AEB/AJL - 1781 cc	02/95 →	VKPC 81402	VKPA 81402
1.8	APT/APU/ARG/ARK - 1781 cc	99 →	VKPC 81402	VKPA 81402
2.4	AGA/AJG/ALF - 2400 cc	95 →	VKPC 81802	
2.4	AML/AMM/APS/APZ/ARJ - 2400 cc	99 →	VKPC 81802	
2.6 V6	ABC/ACZ - 2598 cc	11/94 →	VKPC 81802	
2.8 V6	AAH - 2771 cc	11/94 → 07/96	VKPC 81802	
2.8 V6	ACK/ALG - 2771 cc	03/96 →	VKPC 81802	
2.8 V6	AMX/APR/AQD/ATQ/ATX - 2771 cc	99 →	VKPC 81802	
1.9 DIESEL/DI	AFF - 1896 cc	03/96 →	VKPC 81615	
1.9 DIESEL/DI	AHH - 1896 cc	98 →	VKPC 81615	
1.9 TDI	1Z - 1896 cc	01/95 → 07/96	VKPC 81615	
1.9 TDI	AFN - 1896 cc	02/96 →	VKPC 81615	
1.9 TDI	AHU - 1896 cc	08/96 →	VKPC 81615	
1.9 TDI	AJM - 1896 cc	99 →	VKPC 81626	
1.9 TDI	AVG - 1896 cc	99 →	VKPC 81615	
2.5 24V TDI	AFB/AKN - 2496 cc	97 →	VKPC 81625	

AUDI A4 QUATTRO / AVANT QUATTRO / S4

1.8	ADR/AFY - 1781 cc	11/94 →	VKPC 81402	VKPA 81402
1.8	AEB/AJL - 1781 cc	02/95 →	VKPC 81402	VKPA 81402
1.8	APT/APU/ARK - 1781 cc	99 →	VKPC 81402	VKPA 81402
2.4	AGA/AJG/ALF - 2400 cc	95 →	VKPC 81802	
2.4	AML/APS/APZ/ARJ - 2400 cc	99 →	VKPC 81802	
2.6 V6	ABC/ACZ - 2598 cc	11/94 →	VKPC 81802	
2.7	AGB/AJK - 2700 cc	98 →	VKPC 81811	
2.8 V6	AAH - 2771 cc	11/94 → 07/96	VKPC 81802	
2.8 V6	ACK/ALG - 2771 cc	03/96 →	VKPC 81802	
2.8 V6	AMX/APR/AQD/ATX - 2771 cc	99 →	VKPC 81802	
1.9 TDI	AFN - 1896 cc	02/96 →	VKPC 81615	

www.bergab.ru Берг АБ bergab@ya.ru Тел. (495)-228-06-21, факс (495) 223-3071

www.bergab.ru Берг АБ bergab@ya.ru Тел. (495)-228-06-21, факс (495) 223-3071

1.9 TDI	AVG - 1896 cc	99 →	VKPC 81615	
1.9 TDI	ATJ - 1896 cc	99 →	VKPC 81626	
2.5 24V TDI	AFB/AKN - 2496 cc	97 →	VKPC 81625	

AUDI A4 AVANT RS4 QUATTRO

2.7	ASJ - 2700 cc	01 →	VKPC 81811	

AUDI A6 / A6 AVANT

1.8	ADR/AFY - 1781 cc	07/95 →	VKPC 81402	VKPA 81402
1.8	AEB/AJL - 1781 cc	04/97 →	VKPC 81402	VKPA 81402
1.8	AJP/AQE/ARH - 1781 cc	12/97 →	VKPC 81408	
1.8	ANB/APU/ARK - 1781 cc	01/99 →	VKPC 81402	VKPA 81402
1.8	AWT - 1781 cc	01/99 →	VKPC 81620	
2.0	AAE - 1985 cc	11/94 →	VKPC 81401	VKPA 81401
2.0	ABK - 1985 cc	06/94 →	VKPC 81401	VKPA 81401
2.0	ADW - 1984 cc	06/94 →	VKPC 81401	VKPA 81401
2.0 16V	ACE - 1984 cc	06/94 →	VKPC 81401	VKPA 81401
2.2	AAN - 2226 cc	06/94 →	VKPC 81612	
2.3	AAR - 2309 cc	06/94 →	VKPC 81612	
2.4 V6	AGA/AJG/ALF/ALW - 2400 cc	04/97 →	VKPC 81802	
2.4 V6	APC/APS/ARJ/APZ - 2400 cc	04/98 →	VKPC 81802	
2.6	ABC/ACZ - 2598 cc	→ 06/94	VKPC 81800	
2.6	ABC/ACZ - 2598 cc	07/94 →	VKPC 81802	
2.7	AJK - 2700 cc	98 →	VKPC 81811	
2.8	AAH/AFC - 2771 cc	→ 06/94	VKPC 81800	
2.8	AAH/AFC - 2771 cc	07/94 →	VKPC 81802	
2.8	AEJ/AFM - 2771 cc	07/95 →	VKPC 81802	
2.8 V6	ACK/ALG/AGE/AQD/APR - 2771 cc	97 →	VKPC 81802	
4.2	AEC - 4172 cc	09/94 →	VKPC 81807	
1.9 TDI	AHU - 1896 cc	07/96 → 10/97	VKPC 81401	VKPA 81401
1.9 TDI	AFN/AVG - 1896 cc	04/97 →	VKPC 81615	
1.9 TDI	AJM - 1896 cc	99 →	VKPC 81626	
2.5 TDI	AAT - 2461 cc	06/94 →	VKPC 86619	
2.5 TDI	AEL - 2461 cc	07/95 → 97	VKPC 86619	
2.5 24V TDI	AFB/AKE/AKN - 2496 cc	04/97 →	VKPC 81625	

AUDI A6 QUATTRO / AVANT QUATTRO

1.8	ADR - 1781 cc	07/95 →	VKPC 81402	VKPA 81402
1.8	AFY - 1781 cc	07/95 →	VKPC 81402	VKPA 81402
1.8 20V TURBO	AEB/AJL - 1781 cc	02/95 →	VKPC 81402	VKPA 81402
2.0 16V	ACE - 1984 cc	06/94 →	VKPC 81401	VKPA 81401
2.3	AAR - 2309 cc	06/94 →	VKPC 81612	
2.6	ABC/ACZ - 2598 cc	→ 06/94	VKPC 81800	
2.6	ABC/ACZ - 2598 cc	07/94 →	VKPC 81802	
2.8	AAH/AFC - 2771 cc	→ 06/94	VKPC 81800	
2.8	AAH/AFC - 2771 cc	07/94 →	VKPC 81802	
2.8	ACK/AEJ/AFM - 2771 cc	07/95 →	VKPC 81802	
2.5 TDI	AEL - 2461 cc	94 → 97	VKPC 86619	
2.5 24V TDI	AFB/AKN - 2496 cc	97 →	VKPC 81625	

AUDI A6 ALLROAD QUATTRO

2.7	ARE - 2700 cc	01 →	VKPC 81811	
2.5 24V TDI	AKE - 2496 cc	01 →	VKPC 81625	

AUDI S6 / S6 PLUS QUATTRO

2.2	AAN - 2226 cc	06/94 →	VKPC 81612	
4.2 32V	AEC/AHK - 4172 cc	06/96 →	VKPC 81807	

www.bergab.ru Берг АБ bergab@ya.ru Тел. (495)-228-06-21, факс (495) 223-3071

AUDI .../...

AUDI S6 / S6 PLUS AVANT QUATTRO

4.2 32V	AEC/AHK - 4172 cc	06/96 →		VKPC 81807	

AUDI A8 / A8 QUATTRO / S8

2.8	AAH/AEJ - 2771 cc	07/94 → 99	→|CH 4D-S-000496	VKPC 81800	
2.8	AAH/AEJ - 2771 cc	07/94 → 99	|→CH 4D-S-000497	VKPC 81802	
2.8	ACK/ALG - 2771 cc	04/96 →		VKPC 81802	
2.8	AMX/AQD/APR - 2771 cc	00 →		VKPC 81802	
3.7 32V	AEW/AKJ - 3697 cc	07/95 →		VKPC 81807	
4.2 32V	ABZ/AEM/AGH/AHC/AKG/AKH - 4172 cc	06/94 →		VKPC 81807	
4.2 32V	AHK - 4172 cc	97 →		VKPC 81807	
2.5 24V TDI	AFB/AKN - 2496 cc	97 →		VKPC 81625	
2.5 24V TDI	AKE - 2496 cc	00 →		VKPC 81625	

AUDI V8

3.6 32V	PT - 3608 cc	89 → 94		VKPC 81806	
4.2 32V	ABH - 4172 cc	89 → 94		VKPC 81806	

BEDFORD

ASTRAVAN / ASTRAMAX

1.2	12S - 1196 cc	80 →	OHV	VKPC 85201	
1.2	12ST - 1196 cc	82 → 84	OHC	VKPC 85206	
1.3	13S - 1297 cc	80 → 84	OHC	VKPC 85202	
1.6	16SH - 1598 cc	83 → 85	OHC	VKPC 85400	
1.6	16SV/C16NZ/E16NZ - 1598 cc	86 →		VKPC 85401	
1.8	18E - 1796 cc	85 → 86	OHC	VKPC 85400	
1.8	18SH - 1796 cc	87 →	OHC	VKPC 85407	
1.6 DIESEL	16D - 1598 cc	80 → 86		VKPC 85406	
1.6 DIESEL	16DA - 1598 cc	87 →		VKPC 85408	

CF

2.0 (CF97-500)	20N - 1979 cc	84 → 87		VKPC 85600	VKPA 85608
2.1 DIESEL (CF 18/CF 22/CF 35)	21D - 2068 cc	76 → 83		VKPC 85600	VKPA 85605
2.3 DIESEL (CF 180/CF 220/ CF 230/CF 250)	23D - 2260 cc	80 → 83		VKPC 85600	VKPA 85605

RASCAL

1.0	F10A - 970 cc	11/84 → 04/94		VKPC 96204	

BMW

1500 / 1600 / 1800 / 2000

1.5 1500 / 1502	M10B15 - 1499 cc	62 → 77		VKPC 88600	
1.6 1600 / 1602	M10B16 - 1573 cc	64 → 75		VKPC 88600	
1.8 1800 / 1802	M10B18 - 1773 cc	64 → 76		VKPC 88600	
2.0 2000 / 2002	M10B20 - 1990 cc	66 → 76		VKPC 88600	

315

1.6 E21	M10B16 - 1573 cc	75 → 07/83		VKPC 88609	

www.bergab.ru Берг АБ bergab@ya.ru Тел. (495)-228-06-21, факс (495) 223-3071

316			
1.6 E21	M10B16 - 1573 cc	80 → 07/83	**VKPC 88609**
1.6 E30	M40B16 - 1596 cc	→ 09/88	**VKPC 88610**
1.6 E30	M40B16 - 1596 cc	10/88 → 06/94	**VKPC 88611**
1.6 E36	M40B16 - 1596 cc	12/90 →	**VKPC 88616**
1.6 E36	M43B16 - 1596 cc	02/93 →	**VKPC 88615**
1.6 E36	M43B16 - 1596 cc	06/95 →	**VKPC 88615**
318			
1.8 E21	M10B18 - 1773 cc	75 → 07/83	**VKPC 88609**
1.8 E30	M40B18 - 1796 cc	→ 09/88	**VKPC 88610**
1.8 E30	M40B18 - 1796 cc	10/88 → 06/94	**VKPC 88611**
1.8 E30	M42B18 - 1795 cc	10/89 → 08/91	**VKPC 88615**
1.8 E36	M42B18 - 1795 cc	03/93 → 12/96	**VKPC 88615**
1.8 E36	M40B18 - 1796 cc	11/90 → 12/94	**VKPC 88616**
1.8 E36	M42B18 - 1796 cc	04/94 → 12/96	**VKPC 88615**
1.8 E36	M43B18 - 1796 cc	02/93 → 02/00	**VKPC 88615**
1.8 E36	M44B18 - 1796 cc	94 →	**VKPC 88615**
1.8 TURBO DIESEL E36	M41D17 - 1665 cc	03/94 →	**VKPC 88826**
2.0 TURBO DIESEL E46	1951 cc	1 →	**VKPC 88632**
320			
2.0 E21	M10B20 - 1990 cc	75 → 07/79	**VKPC 88609**
2.0 E21	M20B20 - 1990 cc	77 → 02/81	VKPC 88603
2.0 E21	M20B20 - 1990 cc	03/81 → 08/82	**VKPC 88605**
2.0 E30	M20B20 - 1990 cc	→ 09/87	**VKPC 88605**
2.0 E30	M20B20 - 1990 cc	10/87 → 10/93	**VKPC 88607**
2.0 E30/E35	M20B20 - 1990 cc	82 → 88	**VKPC 88605**
2.0 E36	M50B20 - 1995 cc	09/90 → 03/95	**VKPC 88617**
2.0 COUPE E36	M50B20 - 1995 cc	12/92 → 03/95	**VKPC 88617**
2.0 E36	M52B20 - 1995 cc	12/93 → 02/00	**VKPC 88617**
2.0 COUPE E36	M52B20 - 1995 cc	07/94 → 02/00	**VKPC 88617**
2.0 TURBO DIESEL E46	M47D20 - 1951 cc	98 →	**VKPC 88632**
323			
2.3 E21	M20B23 - 2316 cc	78 → 02/81	VKPC 88603
2.3 E21	M20B23 - 2316 cc	03/81 → 08/82	**VKPC 88605**
2.3 E30	M20B23 - 2316 cc	→ 09/87	**VKPC 88605**
2.3 E30	M20B23 - 2316 cc	10/87 →	**VKPC 88607**
2.3 E36	M52B23 - 2315 cc	07/94 →	**VKPC 88617**
2.3 COUPE E36	M52B23 - 2315 cc	03/95 →	**VKPC 88617**
324			
2.4 E30 DIESEL	M21D24 - 2443 cc	09/85 → 08/91	**VKPC 88614**
2.4 E30 TURBO DIESEL	M21D24 - 2443 cc	09/87 → 06/93	**VKPC 88614**
325			
2.5 E30/5	M50B25 - 2494 cc	→ 09/87	**VKPC 88605**
2.5 E30/5	M50B25 - 2494 cc	10/87 →	**VKPC 88607**
2.5 E36	M50B25 - 2494 cc	11/89 → 10/95	**VKPC 88617**
2.5 COUPE E36	M50B25 - 2494 cc	08/92 → 10/95	**VKPC 88617**
2.5 TURBO DIESEL E36	M51D25 - 2499 cc	91 → 04/99	**VKPC 88826**
328			
2.8 E36	M52B28 - 2793 cc	07/94 → 02/00	**VKPC 88617**
2.8 COUPE E36	M52B28 - 2793 cc	11/94 → 02/00	**VKPC 88617**

www.bergab.ru Берг АБ bergab@ya.ru Тел. (495)-228-06-21, факс (495) 223-3071

www.bergab.ru Берг АБ bergab@ya.ru Тел. (495)-228-06-21, факс (495) 223-3071

BMW .../...

518

1.8 E12	M10B18 - 1766 cc	74 → 05/81	VKPC 88609
1.8 E12	M10B18 - 1766 cc	05/81 →	VKPC 88610
1.8 E28	M10B18 - 1766 cc	→ 04/82	VKPC 88609
1.8 E28	M10B18 - 1766 cc	05/82 → 12/87	VKPC 88610
1.8 E34	M40B18 - 1796 cc	88 → 09/91	VKPC 88611
1.8 E34	M40B18 - 1796 cc	10/91 → 09/95	VKPC 88616
1.8 E34	M43B18 - 1796 cc	03/90 → 09/95	VKPC 88615

520

2.0 E12	M10B20 - 1990 cc	11/75 → 08/77	VKPC 88609
2.0 E12	M20B20 - 1990 cc	09/77 → 02/81	VKPC 88603
2.0 E12	M20B20 - 1990 cc	03/81 → 05/81	VKPC 88605
2.0 E28	M20B20 - 1990 cc	06/81 → 09/87	VKPC 88605
2.0 E28	M20B20 - 1990 cc	10/87 → 12/87	VKPC 88607
2.0 E34	M20B20 - 1990 cc	01/88 → 08/91	VKPC 88607
2.0 E34	M50B20 - 1990 cc	03/89 → 01/97	VKPC 88617
2.0 E39	M52B20 - 1991 cc	95 →	VKPC 88617

523

2.3 E39	M52B23 - 2226 cc	02/95 →	VKPC 88617

524

2.4 E28 DIESEL	M21D24 - 2443 cc	83 → 88	VKPC 88614
2.4 E28 TURBO DIESEL	M21D24 - 2443 cc	83 → 88	VKPC 88614
2.4 E34 TURBO DIESEL	M21D24 - 2443 cc	07/87 → 09/95	VKPC 88612

525

2.5 E28	M20B25 - 2675 cc	05/83 → 12/87	VKPC 88605
2.5 E28	M20B25 - 2494 cc	09/81 → 12/87	VKPC 88802
2.5 E34	M20B25 - 2494 cc	06/87 → 08/91	VKPC 88607
2.5 E34	M50B25 - 2494 cc	03/88 → 90	VKPC 88802
2.5 E34	M50B25 - 2494 cc	01/90 → 01/97	VKPC 88617
2.5 TURBO DIESEL E34	M51D25 - 2498 cc	02/90 → 01/97	VKPC 88826
2.5 TURBO DIESEL E39	M51D25 - 2498 cc	04/95 →	VKPC 88826

528

2.8 E12	M30B28 - 2788 cc	03/78 → 05/81	VKPC 88802
2.8 E28	M30B28 - 2788 cc	06/81 → 12/87	VKPC 88802
2.8 E39	M52B28 - 2793 cc	11/95 →	VKPC 88617

530

3.0 E34	M30B30 - 2986 cc	06/87 → 08/91	VKPC 88802
3.0 E34	M60B30 - 2997 cc	03/92 → 01/97	VKPC 88831

535

3.4 E12	S38B34 - 3453 cc	03/78 → 08/81	VKPC 88802
3.4 E28	M30B34 - 3430 cc	01/85 → 12/87	VKPC 88802
3.4 E34	M30B34 - 3430 cc	01/88 → 09/95	VKPC 88802
3.5 E39	M62B35 - 3498 cc	04/96 →	VKPC 88829

540

4.0 E34	M60B40 - 3982 cc	09/92 → 01/97	VKPC 88831

www.bergab.ru Берг АБ bergab@ya.ru Тел. (495)-228-06-21, факс (495) 223-3071

www.bergab.ru Берг АБ bergab@ya.ru Тел. (495)-228-06-21, факс (495) 223-3071

4.0 E39	M62B44 - 3982 cc	04/96 →	VKPC 88829
628			
2.8 E24	M30B28 - 2788 cc	09/79 → 08/87	VKPC 88802
633			
3.2 E24	M30B33 - 3210 cc	09/79 → 08/84	VKPC 88802
635			
3.4 E24	M30B35 - 3430 cc	09/79 → 05/89	VKPC 88802
725			
2.5 TURBO DIESEL E38	M51D25 - 2498 cc	04/96 →	VKPC 88826
728			
2.8 E23	M30B28 - 2788 cc	07/78 → 08/86	VKPC 88802
2.8 E38	M52B28 - 2793 cc	08/95 →	VKPC 88617
730			
2.8 E23	M30B28 - 2788 cc	09/79 →	VKPC 88802
3.0 E32	M30B30 - 2986 cc	09/86 → 09/94	VKPC 88802
3.0 E32	M60B30 - 2997 cc	04/92 → 09/94	VKPC 88831
3.0 E38	M60B30 - 2997 cc	07/93 → 12/95	VKPC 88830
732			
3.2 E23	M30B33 - 3210 cc	05/77 → 08/86	VKPC 88802
735			
3.4 E23/E32	M30B34 - 3430 cc	09/79 → 09/92	VKPC 88802
3.5 E23	M30B35 - 3453 cc	09/86 → 09/92	VKPC 88802
3.5 E38	M60B40 - 3498 cc	94 → 95	VKPC 88830
3.5 E38	M62B35 - 3498 cc	96 →	VKPC 88829
740			
4.0 E32	M60B40 - 3982 cc	92 →	VKPC 88831
4.0 E38	M60B40 - 3982 cc	94 → 95	VKPC 88830
4.4 E38	M62 - 4398 cc	01/96 →	VKPC 88829
745			
3.2 E23	M30B33 - 3210 cc	04/80 → 04/83	VKPC 88802
3.4 E23	M30B34 - 3430 cc	05/83 → 08/86	VKPC 88802
840			
4.0 E31	M60B40 - 3982 cc	02/93 → 02/96	VKPC 88830
4.4 E31	M62 - 4398 cc	01/96 →	VKPC 88829
Z1			
2.5	M20B25 - 2493 cc	11/88 → 06/91	VKPC 88607

www.bergab.ru Берг АБ bergab@ya.ru Тел. (495)-228-06-21, факс (495) 223-3071

www.bergab.ru Берг АБ bergab@ya.ru Тел. (495)-228-06-21, факс (495) 223-3071

BMW .../...

Z3

1.8	M43B18 - 1796 cc	10/95 → 10/98	VKPC 88615	
1.9	M44B19 - 1895 cc	10/95 →	VKPC 88615	
2.8	M52B28 - 2793 cc	03/97 →	VKPC 88617	

CHRYSLER

VOYAGER / GRAND VOYAGER

2.5 TURBO DIESEL	VM425 - 2499 cc	92 → 93	VKPC 82642	
2.5 TURBO DIESEL	VM425 - 2499 cc	94 →	VKPC 82810	

CITROEN

LNA

1.0	XV8 - 954 cc	07/82 →	VKPC 83200	VKPA 83200
1.1	XW7 - 1124 cc	07/82 →	VKPC 83200	VKPA 83200

AX

1.0 (ZA-ZA/ZH/LJ/LH)	TU9 - 954 cc	86 →	VKPC 83205	
1.1 (ZA-ZB/ZJ)	TU1 - 1124 cc	86 →	VKPC 83205	
1.1 i.e (ZA-DA/DB)	TU1M - 1124 cc	93 →	VKPC 83205	
1.3 (ZA-ZL)	TU24 - 1294 cc	04/87 → 91	VKPC 83205	
1.4 (ZA-ZC/ZK)	TU3 - 1360 cc	→ 93	VKPC 83205	
1.4 (ZA-ZC/ZK)	TU3 - 1360 cc	93 →	VKPC 83428	
1.4 i.e (ZA-DD/DE/LF/LG)	TU3FM - 1360 cc	93 →	VKPC 83428	
1.4 (ZA-DH/DJ)	TU3S - 1360 cc	→ 93	VKPC 83205	
1.4 (ZA-DH/DJ)	TU3S - 1360 cc	93 →	VKPC 83428	
1.4 (ZA-ZH/ZJ)	TU3F2K - 1360 cc	92 → 93	VKPC 83428	
1.4 i.e GTI (ZA-DN)	TU3FJ2 - 1360 cc	92 → 93	VKPC 83428	
1.4 i.e GTI (ZA-DM)	TU3J2 - 1360 cc	93 →	VKPC 83428	
1.4 4x4 (ZA-LB/LC)	TU3F2K - 1360 cc	→ 93	VKPC 83205	
1.4 4x4 (ZA-LB/LC)	TU3F2K - 1360 cc	93 →	VKPC 83428	
1.4 DIESEL (ZA-ZT/ZU)	K9A/TUD3 - 1360 cc	88 →	VKPC 83205	
1.5 DIESEL	TUD5 - 1527 cc	94 →	VKPC 83428	

BX

1.1	XW7 - 1124 cc	→ 05/88	VKPC 83200	VKPA 83200
1.1	TU1 - 1124 cc	05/88 →	VKPC 83205	
1.4	XY - 1360 cc	→ 05/88	VKPC 83200	VKPA 83200
1.4	TU3 - 1360 cc	05/88 → 09/91	VKPC 83205	
1.4	TU3F - 1360 cc	09/91 →	VKPC 83428	
1.6	XU5 - 1580 cc	82 → 08/91	VKPC 83401	
1.6	XU5 - 1580 cc	09/91 →	VKPC 83615	
1.9	XU9 - 1905 cc	82 → 08/91	VKPC 83401	
1.9	XU9 - 1905 cc	09/91 →	VKPC 83615	
1.9 GTI 16V	XU9J4 - 1905 cc	09/82 →	VKPC 83615	
1.8 DIESEL	XUD7 - 1769 cc	→ 08/86	VKPC 83401	
1.8 DIESEL	XUD7 - 1769 cc	09/86 → 94	VKPC 83424	
1.8 TURBO DIESEL	XUD7TE - 1769 cc	09/86 → 94	VKPC 83424	
1.9 DIESEL	XUD9 - 1905 cc	→ 08/86	VKPC 83401	
1.9 DIESEL	XUD9 - 1905 cc	09/86 → 94	VKPC 83424	

C3

1.6 16V	TU5JP4 - 1587 cc	05/02 →	VKPC 83430	

www.bergab.ru Берг АБ bergab@ya.ru Тел. (495)-228-06-21, факс (495) 223-3071

www.bergab.ru Берг АБ bergab@ya.ru Тел. (495)-228-06-21, факс (495) 223-3071

C5					
2.0 HDI TURBO DIESEL	DW10ATED - 1997 cc	03/01 →		**VKPC 83639**	
CX					
2.0	X2L - 1985 cc	06/79 → 06/81	Man.GBX 4, AC	VKPC 83627	
2.0	X2L - 1985 cc	06/79 → 06/81	Man. GBX 5, AC	VKPC 83627	
2.0	X2L - 1985 cc	07/79 → 06/81	Man.GBX 4, ~~AC~~	VKPC 83627	
2.0	X2L - 1985 cc	06/80 → 06/81	Man.GBX 4, Auto.GBX, ~~AC~~	VKPC 83627	
2.0	X2L - 1985 cc	04/80 → 06/81	Man. GBX 5, ~~AC~~	VKPC 83627	
2.0	X2L - 1985 cc	06/81 →		**VKPC 83626**	
2.2	X2.2L - 2175 cc	06/79 → 07/85	Man.GBX 4, AC	VKPC 83627	
2.2	X2.2L - 2175 cc	03/79 → 06/85	Man. GBX 5, AC	VKPC 83627	
2.2	X2.2L - 2175 cc	06/79 → 06/80	Auto.GBX, AC	VKPC 83627	
2.2	X2.2L - 2175 cc	06/80 →	Man.GBX 4, Auto.GBX, ~~AC~~	VKPC 83627	
2.2	J6T - 2175 cc	06/85 →		**VKPC 83626**	
2.4	X2.35L - 2347 cc	06/79 → 06/83	Man.GBX 4, AC	VKPC 83627	
2.4	X2.35L - 2347 cc	03/79 → 06/83	Man. GBX 5, AC	VKPC 83627	
2.4	X2.35L - 2347 cc	06/79 → 06/80	Auto.GBX, AC	VKPC 83627	
2.4	X2.35L - 2347 cc	06/79 → 06/83	Man.GBX 4, ~~AC~~	VKPC 83627	
2.4	X2.35L - 2347 cc	04/80 → 06/83	Man. GBX 5, ~~AC~~	VKPC 83627	
2.5 i.e, 2.5 TURBO i.e	M25 - 2498 cc	06/81 →		**VKPC 83617**	
2.2 DIESEL	X2.2L - 2175 cc	11/75 → 06/79	Man.GBX 4	**VKPC 83617**	
2.2 DIESEL	X2.2L - 2175 cc	11/75 → 06/79	Man. GBX 5	**VKPC 83617**	
2.5 DIESEL / TURBO DIESEL	M25 - 2498 cc	02/78 →	Man.GBX 4, AC	**VKPC 83617**	
2.5 DIESEL / TURBO DIESEL	M25 - 2498 cc	02/78 →	Man. GBX 5, AC	**VKPC 83617**	
2.5 DIESEL / TURBO DIESEL	M25 - 2498 cc	01/80 →	Man.GBX 4, ~~AC~~	**VKPC 83617**	
2.5 DIESEL / TURBO DIESEL	M25 - 2498 cc	01/80 →	Man. GBX 5, ~~AC~~	**VKPC 83617**	
EVASION					
1.8 i.e	XU7JP - 1761 cc	06/94 →		**VKPC 83615**	
2.0	XU10J4R - 1998 cc	06/94 →		**VKPC 83636**	
2.0 i.e	XU10J2C - 1998 cc	06/94 →		**VKPC 83420**	
2.0 i.e TURBO	XU10J2CTE - 1998 cc	06/94 →		**VKPC 83420**	
1.9 TURBO DIESEL	XUD9TE - 1905cc	06/94 →		**VKPC 83420**	
2.0 HDI TURBO DIESEL	DW10TD - 1997 cc	98 →		**VKPC 83639**	
2.1 TURBO DIESEL	XUD11T - 2088 cc	06/94 →		**VKPC 83425**	
SAXO					
1.0	TU9 - 954 cc	02/96 →		**VKPC 83205**	
1.1	TU1 - 1124 cc	02/96 →		**VKPC 83205**	
1.4	TU3JP - 1360 cc	02/96 →		**VKPC 83205**	
1.6	TU5JP - 1587 cc	02/96 →		**VKPC 83428**	
1.6 16V	TU5JP4 - 1587 cc	02/96 →		**VKPC 83430**	
1.5 DIESEL	TUD5 - 1527 cc	02/96 →		**VKPC 83428**	
VISA					
1.1	XW - 1124 cc	→ 06/87		**VKPC 83200**	**VKPA 83200**
1.2	XZ - 1219 cc	→ 06/87		**VKPC 83200**	**VKPA 83200**
1.4	XY - 1360 cc	→ 06/87		**VKPC 83200**	**VKPA 83200**
1.6 GTI	XU5 - 1580 cc	→ 08/86		**VKPC 83401**	
1.6 GTI	XU5 - 1580 cc	08/86 → 10/88		**VKPC 83424**	
1.8 DIESEL	XUD7 - 1769 cc	→ 08/86		**VKPC 83401**	
1.8 DIESEL	XUD7 - 1769 cc	08/86 → 10/88		**VKPC 83424**	
XANTIA					
1.6 i.e	XU5JP - 1580 cc	03/93 →		**VKPC 83615**	
1.8 i.e	XU7JB/P - 1761 cc	03/93 →		**VKPC 83615**	
1.8 16V	XU7JP4 - 1761 cc	03/93 →		**VKPC 83635**	
2.0 i.e	XU10J2 - 1998 cc	03/93 →		**VKPC 83420**	

www.bergab.ru Берг АБ bergab@ya.ru Тел. (495)-228-06-21, факс (495) 223-3071

CITROEN .../...

2.0 i.e 16V	XU10J4 - 1998 cc	03/93 →	VKPC 83420
2.0 i.e 16V	XU10J4RS - 1998 cc	03/93 →	VKPC 83636
2.0 i.e TURBO	XU10J2T - 1998 cc	03/93 →	VKPC 83420
3.0 24V	ES9J4 - 2946 cc	97 →	VKPC 83637
1.9 DIESEL	XUD9 - 1905 cc	→ 12/93	VKPC 83424
1.9 DIESEL	XUD9 - 1905 cc	01/94 →	VKPC 83420
1.9 TURBO DIESEL	XUD9T - 1905 cc	→ 12/93	VKPC 83424
1.9 TURBO DIESEL	XUD9T - 1905 cc	01/94 →	VKPC 83420
2.0 HDI TURBO DIESEL	DW10TD - 1997 cc	98 →	VKPC 83639
2.1 TURBO DIESEL	XUD11BTE - 2088 cc	03/93 →	VKPC 83425

XM

2.0	XU10J2 - 1998 cc	05/89 →	VKPC 83420
2.0 i.e 16V	XU10J4RS - 1998 cc	07/94 →	VKPC 83636
2.0 TURBO	XU10J2TE - 1998 cc	05/89 →	VKPC 83420
3.0 24V	ES9J4 - 2946 cc	97 →	VKPC 83637
2.1 DIESEL	XUD11A - 2138 cc	05/89 → 03/96	VKPC 83420
2.1 TURBO DIESEL	XUD11ATE - 2088 cc	05/89 →	VKPC 83425
2.5 TURBO DIESEL	DK5ATE - 2446 cc	02/94 → 05/96	VKPC 83810
2.5 TURBO DIESEL	DK5ATE - 2446 cc	06/96 →	VKPC 83811

XSARA

1.4	TU3JP - 1360 cc	07/97 → 09/99	VKPC 83205
1.6	TU5JP - 1587 cc	07/97 → 09/99	VKPC 83428
1.6 16V	TU5JP4 - 1587 cc	09/00 →	VKPC 83430
1.8	XU7JP - 1761 cc	07/97 →	VKPC 83615
1.8	XU7JB - 1761 cc	07/97 →	VKPC 83615
1.8 16V	XU7JP4 - 1761 cc	07/97 →	VKPC 83635
2.0	XU10J4R - 1998 cc	07/97 →	VKPC 83636
2.0 16V	XU10J4RS - 1998 cc	07/97 →	VKPC 83636
1.5 DIESEL	TUD5 - 1527 cc	07/97 → 09/99	VKPC 83428
1.8 DIESEL	XUD7 - 1769 cc	07/97 →	VKPC 83420
1.8 DIESEL	DW8 - 1868 cc	98 →	VKPC 83639
1.9 DIESEL	XUD9A - 1905 cc	07/97 →	VKPC 83420
1.9 TURBO DIESEL	XUD9BSD - 1905 cc	07/97 →	VKPC 83420
1.9 TURBO DIESEL	XUD9TE - 1905 cc	07/97 →	VKPC 83420
2.0 HDI	DW10 TD-1997 cc	07/97 →	VKPC 83639

PICASSO

1.6	TU5JP - 1587 cc	01/00 →	VKPC 83428
2.0 HDI	DW10TD - 1997 cc	01/00 →	VKPC 83639

ZX

1.1	TU1 - 1124 cc	03/91 →	VKPC 83205
1.4	TU3M/JP - 1360 cc	03/91 →	VKPC 83205
1.4	TU3F - 1360 cc	93 →	VKPC 83428
1.6	TU5JP - 1587 cc	03/91 →	VKPC 83428
1.6	XU5JP/M - 1580 cc	→ 08/91	VKPC 83401
1.6	XU5JP/M - 1580 cc	09/91 →	VKPC 83615
1.8	XU7JP - 1761 cc	→ 08/91	VKPC 83401
1.8	XU7JP - 1761 cc	09/91 →	VKPC 83615
1.8 16V	XU7JP4 - 1761 cc	03/91 →	VKPC 83635
1.9	XU9 - 1905 cc	→ 08/91	VKPC 83401
1.9	XU9 - 1905 cc	09/91 →	VKPC 83615
2.0	XU10J2/J4 - 1998 cc	03/91 →	VKPC 83420
2.0 16V	XU10J4RS - 1998 cc	03/91 →	VKPC 83636
1.4 DIESEL	TUD3 - 1360 cc	03/91 →	VKPC 83205
1.5 DIESEL	TUD5 - 1527 cc	03/91 →	VKPC 83428
1.8 DIESEL	XUD7 - 1769 cc	→ 09/93	VKPC 83424
1.8 DIESEL	XUD7 - 1769 cc	10/93 →	VKPC 83420

www.bergab.ru Берг АБ bergab@ya.ru Тел. (495)-228-06-21, факс (495) 223-3071

1.9 DIESEL	XUD9 - 1905 cc	→ 09/93	VKPC 83424	
1.9 DIESEL	XUD9 - 1905 cc	10/93 →	VKPC 83420	
1.9 TURBO DIESEL	XUD9T - 1905 cc	→ 09/93	VKPC 83424	
1.9 TURBO DIESEL	XUD9T - 1905 cc	10/93 →	VKPC 83420	

CITROEN COMMERCIAL

C15

1.0	XV - 954 cc	→ 05/88	VKPC 83200	VKPA 83200
1.0	TU9 - 954 cc	05/88 →	VKPC 83205	
1.1	E1A - 1118 cc	→ 06/88	VKPC 83206	
1.1	XW - 1124 cc	→ 05/88	VKPC 83200	VKPA 83200
1.1	TU1 - 1124 cc	05/88 →	VKPC 83205	
1.3	G1A - 1294 cc	→ 06/88	VKPC 83206	
1.4	XY - 1360 cc	→ 05/88	VKPC 83200	VKPA 83200
1.4	TU3 - 1360 cc	05/88 →	VKPC 83205	
1.8 DIESEL	XUD7 - 1769 cc	→ 08/86	VKPC 83401	
1.8 DIESEL	XUD7 - 1769 cc	09/86 → 01/94	VKPC 83424	
1.8 DIESEL	XUD7 - 1769 cc	01/94 →	VKPC 83420	

C25

1.8	XM7T - 1796 cc	87 → 94	VKPC 83630	
2.0	XN1T - 1971 cc	88 → 94	VKPC 83630	
1.9 DIESEL	XUD9 - 1905 cc	11/81 → 94	VKPC 83424	
2.5 DIESEL / TURBO DIESEL	U25/661 - 2498 cc / 2.5 L - 2482 cc	11/81 → 94	VKPC 83617	

C32 / C35

2.2 DIESEL	B22/615 - 2195 cc	74 → 82	VKPC 83607	
2.5 DIESEL	B25/637 - 2499 cc	74 → 82	VKPC 83607	

BERLINGO

1.1 i.e	TU1M - 1124 cc	07/96 →	VKPC 83205	
1.4 i.e	TU3JP - 1360 cc	07/96 →	VKPC 83205	
1.6 16V	TU5JP4 - 1587 cc	01 →	VKPC 83430	
1.8i	XU7JB - 1761 cc	07/96 →	VKPC 83615	
1.8 DIESEL	XUD7 - 1769 cc	07/96 →	VKPC 83420	
1.9 DIESEL	XUD9A - 1905 cc	07/96 →	VKPC 83420	
1.9 TURBO DIESEL	XUD9TE - 1905 cc	07/96 →	VKPC 83420	
2.0 HDI	DW10TD - 1997 cc	98 →	VKPC 83639	

JUMPER

2.0	XU10J2 - 1998 cc	02/94 →	VKPC 83420	
1.9 DIESEL	XUD9A - 1905 cc	02/94 →	VKPC 83420	
1.9 TURBO DIESEL	XUD9TE - 1905 cc	02/94 →	VKPC 83420	
2.0 HDI	DW10TD - 1997 cc	98 →	VKPC 83639	
2.5 DIESEL	DJ5 - 2445 cc	02/94 → 05/96	VKPC 83810	
2.5 DIESEL	DJ5 - 2445 cc	06/96 →	VKPC 83811	
2.5 TURBO DIESEL	DJ5T - 2445 cc	02/94 → 05/96	VKPC 83810	
2.5 TURBO DIESEL	DJ5T - 2445 cc	06/96 →	VKPC 83811	

JUMPY

1.6i	1580SPi - 1580 cc	95 →		VKPA 83431
1.6i	1580SPi - 1580 cc	95 →		VKPA 83432
1.9 DIESEL	XUD9 - 1905 cc	10/95 → 04/98	VKPC 83420	
1.9 DIESEL	DW8 - 1868 cc	04/98 →	VKPC 83639	
1.9 TURBO DIESEL	XUD9T - 1905 cc	10/95 → 04/98	VKPC 83420	
2.0 HDI	DW10TD - 1997 cc	04/98 →	VKPC 83639	

www.bergab.ru Берг АБ bergab@ya.ru Тел. (495)-228-06-21, факс (495) 223-3071

www.bergab.ru Берг АБ bergab@ya.ru Тел. (495)-228-06-21, факс (495) 223-3071

DACIA

DUSTER

1.6 DIESEL	F8M - 1596 cc	90 →		VKPC 86413

SHIFTER

1.6 DIESEL	F8M - 1596 cc	90 →		VKPC 86413

DAEWOO

ESPERO

1.5	Y1.5L - 1498 cc	02/95 →		VKPC 85206
1.5 16V	V1.5L - 1498 cc	02/95 →	DOHC	VKPC 90200
1.8	81.8L - 1796 cc	02/95 → 10/95		VKPC 85407
1.8	81.8L - 1796 cc	11/95 →		VKPC 85400
2.0	Z2.0L - 1998 cc	02/95 → 10/95		VKPC 85407
2.0	Z2.0L - 1998 cc	11/95 →		VKPC 85400

LANOS

1.3 8V	C1.3L - 1349 cc	97 →		VKPC 90202
1.5 8V	Y1.5L - 1498 cc	97 →		VKPC 90202
1.6 16V	61.6L - 1598 cc	97 →		VKPC 90200

LEGANZA

2.0	Z2.0L - 1998 cc	97 →		VKPC 85611

NEXIA

1.5 8V	Y1.5L/G15MF - 1498 cc	02/95 →		VKPC 85206
1.5 16V	V1.5L/A15MF - 1498 cc	02/95 →		VKPC 90200
1.8	81.8L - 1796 cc	02/95 →		VKPC 85407

NUBIRA

1.5 16V	Y1.5L - 1498 cc	97 →		VKPC 90402
1.6 16V	61.6L - 1598 cc	97 →		VKPC 90402
1.8	81.8L - 1796 cc	97 →		VKPC 85611
2.0	Z2.0L - 1998 cc	97 →		VKPC 85611

DAIHATSU

APPLAUSE

1.6 (A101 / A111)	HD-E - 1589 cc	06/89 →		VKPC 97200

CHARADE

1.0 (G11)	CB 22 / CB 60 - 993 cc	83 → 85		VKPC 87203
1.0 (G11)	CB 22 - 993 cc	85 → 12/86		VKPC 97000
1.0 (G100)	CB 20 - 993 cc	87 → 93	SOHC	VKPC 97000
1.0 (G100)	CB 20 - 993 cc	87 → 93	DOHC	VKPC 97001
1.3 (G102 / G112)	HC-C / HC-E - 1295 cc	11/90 →		VKPC 97200
1.0 DIESEL (G30)	CL 60 - 993 cc	82 → 87		VKPC 87203
1.0 DIESEL (G101)	CL - 993 cc	11/90 →		VKPC 87203

www.bergab.ru Берг АБ bergab@ya.ru Тел. (495)-228-06-21, факс (495) 223-3071

www.bergab.ru Берг АБ bergab@ya.ru Тел. (495)-228-06-21, факс (495) 223-3071

CHARMANT					
1.3 (A30/35)	4K - 1290 cc	81 → 83		**VKPC 91402**	
FEROZA					
1.6 (F300/F310)	HD - 1589 cc	10/88 →		**VKPC 97201**	
GRAND MOVE					
1.5 16V (G303)	HE-EG - 1500 cc	97 →		**VKPC 97200**	
SPORTRAK					
1.6 (F300/F310)	HD - 1589 cc	10/88 →		**VKPC 97201**	
TERIOS					
1.3 (J100)	1300 cc	97 →		**VKPC 97201**	

FIAT

124					
1.2	124A/124FA - 1197 cc	→ 81		**VKPC 82404**	
1.6	132A9/AC9 - 1592 cc	72 → 74	I→Mot. 193014	**VKPC 82412**	
SPORT 1.6 (124CC/CS)	132AC.000 - 1592 cc	74 → 84		**VKPC 82412**	
SPORT 1.8 (124CC1/CS1)	132AC1/AC4 - 1756 cc	74 → 84		**VKPC 82412**	
2.0 (124DS)	132C3.031 - 1592 cc	82 → 86		**VKPC 82412**	
1.2 DIESEL (124A)	124A - 1197 cc	79 → 80		**VKPC 82404**	
127					
0.9	100 GL - 903 cc	71 → 83			**VKPA 82202**
1.05	127A.000 - 1049 cc	77 → 86		**VKPC 82208**	
1.3	127A3.000 - 1301 cc	82 → 83		**VKPC 82208**	
1.3 DIESEL	127A5.000 - 1301 cc	81 → 87		**VKPC 82208**	
128					
1.1	128A/128AC5/128BB - 1116 cc	69 → 80		**VKPC 82206**	VKPA 82206
1.3	128A1/128AC/128AR/128BB1 - 1290 cc	70 → 84		**VKPC 82206**	VKPA 82206
131					
1.3 (A/AF)	131B - 1301 cc	78 → 84		**VKPC 82412**	
1.6 (A1/AF1)	131B1 - 1585 cc	78 → 82	DOHC	**VKPC 82412**	
2.0 (AR/AK)	131B2 - 1995 cc	75 → 76		**VKPC 82412**	
2.0 DIESEL (A/AF)	8144.65 (SOFIM) - 1995 cc	79 → 84		**VKPC 82606**	
2.5 DIESEL (AZ/AFZ)	8144.61 (SOFIM) - 2445 cc	79 → 84		**VKPC 82606**	
132					
1.6	132A.000 - 1592 cc	74 → 81		**VKPC 82412**	
1.6	132A/B/C - 1585 cc / 1592 cc	74 → 81		**VKPC 82412**	
1.8	132A1/B1.000 - 1756 cc	74 → 81		**VKPC 82412**	
2.0	131B2 - 1995 cc	74 → 81		**VKPC 82412**	
2.0 DIESEL	8144.65 - 1995 cc	78 → 81		**VKPC 82606**	
2.5 DIESEL	8144.61 - 2445 cc	78 → 81		**VKPC 82606**	

www.bergab.ru Берг АБ bergab@ya.ru Тел. (495)-228-06-21, факс (495) 223-3071

www.bergab.ru Берг АБ bergab@ya.ru Тел. (495)-228-06-21, факс (495) 223-3071

FIAT .../...

147					
1.05	127AJ - 1049 cc	80 → 83		VKPC 82208	
600					
0.8	100 D - 767 cc	60 → 70		VKPC 82205	
ARGENTA					
1.6 (132 A)	133D.000 - 1585 cc	81 → 83	→|Mot. 1262903	VKPC 82412	
2.0 (132 A2)	132D1.000 - 1995 cc	→	→|Mot. 1262887	VKPC 82412	
2.0 i.e (132A3)	132C3 - 1995 cc	83 → 85		VKPC 82412	
2.5 DIESEL (132 A)	8144.61 - 2445 cc	81 → 83		VKPC 82606	
BARCHETTA					
1.8 16V (183SA)	182A1.000 - 1747 cc	95 →		VKPC 82645	
BRAVA					
1.4 (182BA, 182BG)	182A3/182A5 - 1370 cc	95 →	→|Mot. 705144	VKPC 82437	
1.4 (182BA, 182BG)	182A3/182A5 - 1370 cc	95 →	|→Mot. 705145	VKPC 82247	
1.6 16V (182BB, 182BH)	182A4/182A6.000 - 1581 cc	95 →		VKPC 82441	VKPA 82441
1.6 16V (182BO)	182A4.027 - 1581 cc	95 →		VKPC 82441	VKPA 82441
1.8 (182BC)	182A2.000 - 1747 cc	95 →		VKPC 82645	
1.9 DIESEL (182AE)	160A7.000 - 1929 cc	95 →			VKPA 82240
1.9 TURBO DIESEL (182BF, 182BI)	182A7/182A8.000 - 1910 cc	95 →		VKPC 82665	
1.9 JTD TURBO DIESEL (182BR)	182B4.000 - 1910 cc	98 →		VKPC 82665	
BRAVO					
1.4 (182AA, 182AG)	182A3/182A5 - 1370 cc	95 →	→|Mot. 705144	VKPC 82437	
1.4 (182AA, 182AG)	182A3/182A5 - 1370 cc	95 →	|→Mot. 705145	VKPC 82247	
1.6 16V (182AB, 182AH)	182A4/182A6.000 - 1581 cc	95 →		VKPC 82441	VKPA 82441
1.8 (182AC)	182A2.000 - 1747 cc	95 →		VKPC 82645	
2.0 20V (182AD, 182AQ)	182A1/182B7.000 - 1998 cc	95 →		VKPC 82646	
1.9 DIESEL (182AE)	160A7.000 - 1929 cc	95 →			VKPA 82240
1.9 TURBO DIESEL (182AF, 182AI)	182A7/182A8.000 - 1910 cc	95 →		VKPC 82665	
1.9 JTD TURBO DIESEL (182AR)	182B4.000 - 1910 cc	98 →		VKPC 82665	
CAMPAGNOLA					
2.4 DIESEL	8142.61 - 2445 cc	81 →		VKPC 82606	
CINQUECENTO					
0.9 (170)	1170A1 / 170A1 - 903 cc	94 →	AC		VKPA 82248
0.9 (170AF, 170BF, 170AG)	1170A1.046 - 898 cc	92 →			VKPA 82202
0.9 (170AB, 170AC)	170A/A1.000/046 - 903 cc	92 →			VKPA 82202
1.1 (170AH)	176B2.000 - 1108 cc	92 →		VKPC 82214	
COUPE					
1.8 16V	182A2.000 - 1747 cc	93 →		VKPC 82645	
1.8 16V (175AXA)	183A1.000 - 1747 cc	93 →		VKPC 82645	
2.0 16V (FACA)	836A3.000/011 - 1995 cc	93 →		VKPC 82660	
2.0 20V (175AXE)	182B3.000 - 1998 cc	96 →		VKPC 82646	
2.0 16V TURBO (FACB)	175A1.000 - 1995 cc	93 →		VKPC 82660	
2.0 20V TURBO (175AXC, 175AXD)	182A1.000/175A3.000 - 1998 cc	96 →		VKPC 82646	

www.bergab.ru Берг АБ bergab@ya.ru Тел. (495)-228-06-21, факс (495) 223-3071

www.bergab.ru Берг АБ bergab@ya.ru Тел. (495)-228-06-21, факс (495) 223-3071

CROMA					
1.6 (154AB)	154A4.048 - 1585 cc	85 → 90		**VKPC 82420**	
2.0 (154AC, 154AU)	154C2/A1.000 - 1995 cc	85 → 90		**VKPC 82614**	
CHT 2.0 (154LB)	154C5.000 - 1995 cc	91 → 92		**VKPC 82614**	
2.0 i.e (154AD)	834B.000 - 1995 cc	85 → 90		**VKPC 82614**	
2.0 i.e (154LC, 154NC)	154C3.000 - 1995 cc	91 →		**VKPC 82622**	
2.0 i.e (154LD)	154C3.046 - 1995 cc	91 →		**VKPC 82622**	
2.0 i.e (154LE, 154NE, 154ME)	154C4.000 - 1995 cc	91 →		**VKPC 82622**	
2.0 i.e (154LF, 154NF, 154PF)	154C4.046 - 1995 cc	91 →		**VKPC 82622**	
2.0 i.e (154LM)	834B.146 - 1995 cc	91 →		**VKPC 82622**	
2.0 i.e 16V (154LN, 154ON)	154E1.000 - 1995 cc	91 →		**VKPC 82629**	
2.0 i.e TURBO (154AG, 154DG)	834A2.000 - 1995 cc	85 → 90		**VKPC 82614**	
2.5 i.e V6 (154LP, 154NP)	834G.000 - 2445 cc	93 → 96		**VKPC 82800**	
1.9 TURBO DIESEL (154AE, 154AP)	154C6.000 - 1929 cc	85 → 90		**VKPC 82620**	VKPA 82620
1.9 TURBO DIESEL (154LG)	154C6.000 - 1929 cc	91 →		**VKPC 82620**	VKPA 82620
2.5 DIESEL (154AE)	8144.67 - 2499 cc	85 → 90		**VKPC 82616**	
2.5 TURBO DIESEL (154AE)	8144.91 - 2445 cc	85 → 90		**VKPC 82616**	
2.5 TURBO DIESEL (154LH, 154NH, 154LI, 154LL)	8144.97 - 2445 cc	91 →	→|Mot. 1340163	**VKPC 82616**	
2.5 TURBO DIESEL (154LH, 154NH, 154LI)	8144.97S - 2499 cc	→ 12/92	|→Mot. 1340164		**VKPA 82648**
2.5 TURBO DIESEL (154PL)	8144.97Y - 2445 cc	91 →		**VKPC 82638**	
DOBLO					
1.2 8V	223A5.000 - 1242 cc	00 →		**VKPC 82250**	
1.9 DIESEL (223AX, 223ZX)	223A6.000 - 1905 cc	00 →		**VKPC 82665**	
DUNA					
1.1 (146 A7)	146A6.000 - 1116 cc	86 → 90		**VKPC 82208**	
1.3 (146 AW)	146A5.000 - 1301 cc	86 → 90		**VKPC 82208**	
1.7 DIESEL (146 A)	146B3.000 - 1697 cc	86 → 90		**VKPC 82210**	**VKPA 82210**
MAREA					
1.4 (185AX, 185BX)	182A3.000 - 1370 cc	07/96 →	→|Mot. 705144	**VKPC 82437**	
1.4 (185AX, 185BX)	182A3.000 - 1370 cc	07/96 →	|→Mot. 705145	**VKPC 82247**	
1.6 16V (185AX, 185BX)	182A4/185A3.000 - 1581 cc	07/96 →		**VKPC 82441**	**VKPA 82441**
1.6 16V (185AX)	182B5.098 - 1581 cc	99 →		**VKPC 82441**	**VKPA 82441**
1.8 (185AX, 185BX)	182A2.000 - 1747 cc	07/96 →		**VKPC 82645**	
2.0 20V (185AX, 185BX)	182A1/B7.000 - 1998 cc	07/96 →		**VKPC 82646**	
1.9 TURBO DIESEL (185AX, 185BX)	182A7/A8.000 - 1910 cc	07/96 →		**VKPC 82665**	
1.9 JTD TURBO DIESEL (185AX, 185BX, 185CX)	182B4.000 - 1910 cc	99 →		**VKPC 82665**	
2.4 TURBO DIESEL (185AX, 185BX)	185A2.000 - 2387 cc	07/96 →		**VKPC 82665**	
2.4 JTD TURBO DIESEL (185AX, 185BX)	182A6.000 - 2387 cc	99 →		**VKPC 82665**	
MULTIPLA					
1.6 16V (186AM)	186A3/186A4.000 - 1581 cc	98 →		**VKPC 82441**	**VKPA 82441**
1.6 16V (186AXA)	182A4.000 - 1581 cc	98 →		**VKPC 82441**	**VKPA 82441**
1.9 JTD TURBO DIESEL (186AXB)	182B4.000 - 1910 cc	98 →		**VKPC 82665**	
PALIO WEEKEND					
1.2 (178DXG)	178B5.000 - 1242 cc	97 →		**VKPC 82214**	
1.6 (178DXD)	178B3.000 - 1581 cc	97 →		**VKPC 82441**	**VKPA 82441**
1.7 TURBO DIESEL (178DXH)	176A8.000 - 1697 cc	97 →			**VKPA 82653**
1.9D (178DYD)	223A6.000 - 1910 cc	03/01 →		**VKPC 82665**	

www.bergab.ru Берг АБ bergab@ya.ru Тел. (495)-228-06-21, факс (495) 223-3071

www.bergab.ru Берг АБ bergab@ya.ru Тел. (495)-228-06-21, факс (495) 223-3071

FIAT .../...

PANDA

0.6, 0.8, 0.9, 1.0	650 cc/850 cc/950 cc/965 cc	80 → 85			VKPA 82202
0.75 (141A)	141B.000 (ACB) - 750 cc	86 → 91			VKPA 82220
0.75 (141A)	156A4.000 (ACT) - 750 cc	86 → 91		VKPC 82214	
0.8 (141AI)	141B.000 - 769 cc	91 →			VKPA 82220
0.8 (141AA)	156A4.000 - 769 cc	91 →		VKPC 82214	
0.8 (141AM)	156A4.048 - 769 cc	91 →		VKPC 82214	
0.9 (141A)	(ACB) - 899 cc	86 → 91			VKPA 82220
0.9 (141AT)	1170A1.046 - 899 cc	91 →			VKPA 82202
0.9 (141AL)	146A.046 - 903 cc	91 →			VKPA 82220
1.0 (141AB, 141AF, 141AO)	156A2.000/100/246 - 999 cc	86 →		VKPC 82214	
1.0 (141AE)	156A3.000 - 999 cc	91 →		VKPC 82214	
1.0 (141AJ)	141C2.000 - 999 cc	91 →		VKPC 82214	
1.1 (141AS)	156C.046 - 1108 cc	86 →		VKPC 82214	
1.1 (141AK)	176B2.000 - 1108 cc	91 →		VKPC 82214	
1.3 DIESEL (141AD)	156A5.000 - 1301 cc	86 → 93		VKPC 82208	

PUNTO

1.1 (176AA, 176AH, 176AQ)	176A6/176B2.000 - 1108 cc	93 →		VKPC 82214	
1.2 (176BB, 176AR, 176AC, 176AP)	176A7/A8/B1.000 - 1242 cc	93 →		VKPC 82214	
1.2 CABRIOLET (176AB, 160BB)	176A7.000 - 1242 cc	94 →		VKPC 82214	
1.2 CABRIOLET (176AR)	176B4.000 - 1242 cc	97 →		VKPC 82214	
1.2 16V CABRIOLET (176AV, 176BV)	176B9.000 - 1242 cc	97 →		VKPC 82249	
1.2 8V (188AX, 188BX)	188A4.000 - 1242 cc	99 →		VKPC 82250	
1.2 16V (188AX, 188BX)	188A5.000 - 1242 cc	00 →		VKPC 82249	
1.4 TURBO (176AD)	176A4.000 - 1372 cc	93 →		VKPC 82230	VKPA 82230
1.6i (176AL, 176BL)	176A9.000 - 1581 cc	93 →		VKPC 82230	VKPA 82230
1.8 16V (188AX, 188BX)	183A1.000 - 1747 cc	99 →		VKPC 82645	
1.7 DIESEL L.H.D (176AI)	176B3.000 - 1697 cc	93 →			VKPA 82653
1.7 TURBO DIESEL (176AF)	176A5.000 - 1697 cc	93 →			VKPA 82653
1.7 TURBO DIESEL (176AG, 176CG)	176A3.000 - 1697 cc	93 →			VKPA 82653
1.9 DIESEL (188AX, 188BX)	188A3.000 - 1910 cc	99 →		VKPC 82665	
1.9 JTD TURBO DIESEL (188AX, 188BX)	188A2.000 - 1910 cc	99 →		VKPC 82665	

REGATA

1.1	138B.000 - 1116cc	83 → 89		VKPC 82206	VKPA 82222
1.3	149A3.000 - 1301 cc	83 → 89	~~AC~~	VKPC 82206	VKPA 82222
1.3 E.S	149A3.000 - 1301 cc	83 → 89		VKPC 82218	VKPA 82218
1.3	149A3.000 - 1301 cc	83 → 89	AC	VKPC 82216	
1.5	138B3/C3 - 1498 cc	83 → 86	~~AC~~	VKPC 82206	VKPA 82222
1.5	138B3/C3 - 1498 cc	86 → 87	~~AC~~	VKPC 82218	VKPA 82218
1.5 i.e SPI	138C2.000 - 1498 cc	86 → 89		VKPC 82218	VKPA 82218
1.5 i.e MPI	138C2.000 - 1498 cc	86 → 89		VKPC 82206	VKPA 82222
1.6	149A - 1585 cc	83 → 86	SOHC	VKPC 82418	
1.6	149A2 - 1585 cc	83 → 86	DOHC	VKPC 82424	
1.6	149A.000 - 1585 cc	86 → 89		VKPC 82418	
1.6	149C3.000 - 1585 cc	86 → 89		VKPC 82424	
1.7 DIESEL	149B3.000 - 1697 cc	83 → 89		VKPC 82604	
1.7 DIESEL	138B6.000 - 1714 cc	83 → 86		VKPC 82413	
1.9 DIESEL	149A1.000 - 1929 cc	83 → 86	→|Mot. 7056787, ~~AC~~	VKPC 82604	
1.9 DIESEL	149A1.000 - 1929 cc	83 → 86	→|Mot. 7380452, ~~AC~~	VKPC 82604	
1.9 DIESEL	149A1.000 - 1929 cc	83 → 86	|→Mot. 7056788, ~~AC~~	VKPC 82608	VKPA 82608
1.9 DIESEL	149A1.000 - 1929 cc	83 → 86	|→Mot. 7380452, ~~AC~~	VKPC 82608	VKPA 82608
1.9 DIESEL	149A1.000 - 1929 cc	86 → 89	→|Mot. 678617, Ø	VKPC 82604	
1.9 DIESEL	149A1.000 - 1929 cc	86 → 89	|→Mot. 678618, Ø	VKPC 82604	
1.9 DIESEL	149A1.000 - 1929 cc	86 → 89	0	VKPC 82608	VKPA 82608

www.bergab.ru Берг АБ bergab@ya.ru Тел. (495)-228-06-21, факс (495) 223-3071

www.bergab.ru Берг АБ bergab@ya.ru Тел. (495)-228-06-21, факс (495) 223-3071

1.9 TURBO DIESEL	831D1.000 - 1929 cc	86 → 89		**VKPC 82608**	**VKPA 82608**
RITMO/STRADA					
1.05	127AE - 1048 cc	79 → 83		**VKPC 82208**	
1.1	138A/B,146A - 1116 cc	78 → 88	~~AC~~	**VKPC 82206**	**VKPA 82222**
1.1	138A/B,146A - 1116 cc	78 → 88	AC	**VKPC 82216**	
1.1 ES	138B1 / C1 - 1116 cc	82 → 88		**VKPC 82218**	**VKPA 82218**
1.3	138A1/B2 ,128A3 ,149A7 - 1299 / 1301 cc	78 → 88	~~AC~~	**VKPC 82206**	**VKPA 82222**
1.3	138A1/B2 ,149A7 - 1301 cc	78 → 88	AC	**VKPC 82216**	
1.5	138A2 / A4 / B3 - 1498 cc	78 → 85	~~AC~~	**VKPC 82206**	**VKPA 82222**
1.5	138C2 / C3 , 149A5 - 1498 cc	85 → 88	~~AC~~	**VKPC 82218**	**VKPA 82218**
1.5	138A2/3/4/B3/C , 149A - 1498 cc	78 → 88	AC	**VKPC 82216**	
1.6	138AR - 1585 cc	→ 05/85		VKPC 82416	
1.6	138AR - 1585 cc	06/85 → 88		**VKPC 82424**	
2.0	138AR1.000 - 1995 cc	81 → 87		VKPC 82416	
1.7 DIESEL (138 A/D)	138B6.000 - 1714 cc	80 → 82		**VKPC 82410**	**VKPA 82410**
1.7 DIESEL (138 A, 138D)	138B6.000 - 1714 cc	82 → 85		VKPC 82413	
1. 7 DIESEL (138 A)	149B3.000 - 1697 cc	85 → 88		**VKPC 82604**	
1.9 TURBO DIESEL (138 A)	831D1.000 - 1929 cc	85 → 88		**VKPC 82608**	**VKPA 82608**
SEICENTO					
0.9 (187AXA)	1170A1.046 - 899 cc	98 →			**VKPA 82202**
1.1 (187AX, 187CX)	176B2.000 - 1108 cc	98 → 04/99		**VKPC 82214**	
1.1 (187AX, 187CX)	176B2.000 - 1108 cc	04/99 →	→|Mot. 9042883	**VKPC 82214**	
1.1 (187AX, 187CX)	176B2.000 - 1108 cc	04/99 →	|→Mot. 9042884	**VKPC 82250**	
STILO					
2.4 20V Abarth	192A2.000 - 2446 cc	10/01 →		**VKPC 82646**	
STRADA					
1.2 Mpi (178EX)	178B5.000 - 1242 cc	99 →	→|Mot. 9042883	**VKPC 82214**	
1.2 Mpi (178EX)	178B5.000 - 1242 cc	99 →	|→Mot. 9042884	**VKPC 82250**	
1.7 TURBO DIESEL (178EX)	176A3.000 - 1700 cc	99 → 10/99	→|Mot. 2427907		**VKPA 82653**
TEMPRA					
1.4 (159AA)	159A2.000 - 1372 cc	90 → 93		**VKPC 82224**	VKPA 82224
1.4 (159AA)	159A2.000 - 1372 cc	90 → 93	AC	**VKPC 82431**	**VKPA 82431**
1.4 (159AA)	159A2.000 - 1372 cc	90 → 93	Auto.GBX, ⊖		**VKPA 82240**
1.4 (159AA)	159A2.000 - 1372 cc	93 → 07/95	→|Mot. 9336692	**VKPC 82431**	**VKPA 82431**
1.4 (159AA)	159A2.000 - 1372 cc	07/95 →	|→Mot. 9336693	**VKPC 82246**	**VKPA 82246**
1.4 (159AC)	159A1.046 - 1372 cc	90 → 93		**VKPC 82431**	**VKPA 82431**
1.4 (159AC)	159A1.046 - 1372 cc	90 → 93	AC	**VKPC 82431**	**VKPA 82431**
1.4 (159AC)	160A1.046 - 1372 cc	93 →		**VKPC 82431**	**VKPA 82431**
1.4 (159AC)	160A1.046 - 1372 cc	93 →	→|Mot. 9336692, ⊖	**VKPC 82245**	
1.4 (159AX)	836A4.000 - 1372 cc	93 →	→|Mot. 9336692, ⊖	**VKPC 82245**	
1.4 (159AX)	836A4.000 - 1372 cc	93 →	|→Mot. 9336693, AC, ⊖	**VKPC 82230**	**VKPA 82230**
1.4 (159AX)	836A4.000 - 1372 cc	93 → 07/95	→|Mot. 9336692, ⊘	**VKPC 82431**	**VKPA 82431**
1.4 (159AX)	836A4.000 - 1372 cc	07/95 →	|→Mot. 9336693, ⊘	**VKPC 82246**	**VKPA 82246**
1.6 (159AD)	159A3.000 - 1581 cc	90 → 93		**VKPC 82224**	VKPA 82224
1.6 (159AD)	159A3.000 - 1581 cc	90 → 93	AC	**VKPC 82431**	**VKPA 82431**
1.6 (159AD)	159A3.000 - 1581 cc	90 → 93	Auto.GBX, ⊖		**VKPA 82240**
1.6 (159AD)	159A3.000 - 1581 cc	93 →	→|Mot. 9336692	**VKPC 82245**	
1.6 (159AD)	159A3.000 - 1581 cc	93 →	|→Mot. 9336693	**VKPC 82230**	**VKPA 82230**
1.6 (159AE, 159AT)	835C1.000 - 1581 cc	93 →	→|Mot. 9336692	**VKPC 82245**	
1.6 (159AE, 159AT)	835C1.000 - 1581 cc	93 →	|→Mot. 9336693	**VKPC 82230**	**VKPA 82230**
1.6 (159AE, 159AT)	835C1.000 - 1581 cc	93 →	|→Mot. 9336693, AC	**VKPC 82230**	**VKPA 82230**
1.6 (159AJ)	159B9.000 - 1581 cc	93 →		**VKPC 82230**	**VKPA 82230**
1.6 (159AT)	159A3.048 - 1581 cc	93 →		**VKPC 82450**	
1.6 (159A3)	159A3.098 - 1581 cc	93 →		**VKPC 82230**	**VKPA 82230**

www.bergab.ru Берг АБ bergab@ya.ru Тел. (495)-228-06-21, факс (495) 223-3071

www.bergab.ru Берг АБ bergab@ya.ru Тел. (495)-228-06-21, факс (495) 223-3071

FIAT .../...

1.8 (159AM)	159A4.000 - 1756 cc	90 → 93		VKPC 82432	
1.8 (159AN)	159A4.046 - 1756 cc	90 → 93		VKPC 82647	
1.8 (159AU)	835C2.000 - 1756 cc	93 →		VKPC 82647	
1.8 (159AZ)	835C4.000 - 1756 cc	93 →		VKPC 82647	
1.8 (159BY)	836A5.000 - 1756 cc	93 →		VKPC 82647	
2.0 (159AP)	159A6.046 - 1995 cc	→ 07/91		VKPC 82622	
2.0 (159AP)	159A6.046 - 1995 cc	07/91 →		VKPC 82647	
2.0 (159AK)	159A6.011 - 1995 cc	93 →		VKPC 82647	
1.9 DIESEL (159AG)	160A7.000 - 1929 cc	90 → 04/95		VKPC 82429	VKPA 82429
1.9 DIESEL (159AG)	160A7.000 - 1929 cc	04/95 →			VKPA 82429
1.9 DIESEL (159AU, 159CU)	160D1.000 - 1929 cc	93 →	→|Mot. 1730139	VKPC 82618	VKPA 82618
1.9 DIESEL (159AU, 159CU)	160D1.000 - 1929 cc	93 → 03/94	AC	VKPC 82618	VKPA 82618
1.9 TURBO DIESEL (159AI)	160A6.000 - 1929 cc	90 → 93	AC	VKPC 82618	VKPA 82618
1.9 TURBO DIESEL (159AI)	160A6.000 - 1929 cc	90 → 93		VKPC 82429	VKPA 82429
1.9 TURBO DIESEL (159AL, 159AQ)	160A6.046 / 160B6.046 - 1929 cc	90 → 93		VKPC 82618	VKPA 82618
1.9 TURBO DIESEL (159AI, 159BI)	160A6.000 - 1929 cc	93 → 97		VKPC 82618	VKPA 82618
1.9 TURBO DIESEL (159AI, 159BI)	160A6.000 - 1929 cc	93 → 03/94	AC	VKPC 82618	VKPA 82618

TIPO

1.1 (160 AA)	160A3.000 - 1108 cc	88 → 93		VKPC 82214	
1.1 (160 EO)	156C.046 - 1108 cc	93 →		VKPC 82214	
1.1 (160EA)	160A1.046 - 1108 cc	93 →		VKPC 82431	VKPA 82431
1.4 (160AB, 160AC)	160A1 - 1372 cc	88 → 93		VKPC 82224	VKPA 82224
1.4 (160AB, 160AC)	160A1 - 1372 cc	88 → 93	AC	VKPC 82431	VKPA 82431
1.4 (160AB, 160AC)	160A1 - 1372 cc	88 → 93	Auto.GBX, ⊖		VKPA 82240
1.4 (160AD)	160A1.046 - 1372 cc	88 → 93	→|Mot. 2125555	VKPC 82434	
1.4 (160AD)	160A1.046 - 1372 cc	88 → 93	|→Mot. 2125556	VKPC 82431	VKPA 82431
1.4 (160AD)	160A1.046 - 1372 cc	88 → 93	AC, ⊖	VKPC 82245	
1.4 (160AU)	159A2.000 - 1372 cc	88 →		VKPC 82224	VKPA 82224
1.4 (160AU)	159A2.000 - 1372 cc	93 →	AC, ⊖	VKPC 82424	
1.4 (160EA)	160A1.046 - 1372 cc	93 →	~~AC~~, ⊘	VKPC 82431	VKPA 82431
1.4 (160EA)	160A1.046 - 1372 cc	93 →	⊖	VKPC 82245	
1.4 (160AU)	159A2.000 - 1372 cc	93 →		VKPC 82224	VKPA 82224
1.4 (160EP)	836A4.000 - 1372 cc	93 →	⊘, ~~AC~~	VKPC 82431	VKPA 82431
1.4 (160EP)	836A4.000 - 1372 cc	93 →	⊖	VKPC 82245	
1.6 (160AE, 160AZ)	159A3.000 - 1581 cc	88 → 93		VKPC 82224	VKPA 82224
1.6 (160AE, 160AZ)	159A3.000 - 1581 cc	88 → 93	AC	VKPC 82431	VKPA 82431
1.6 (160AE, 160AZ)	159A3.000 - 1581 cc	88 → 93	Auto.GBX, ⊖		VKPA 82240
1.6 (160AF)	159A3.046 - 1581 cc	88 → 93	→|Mot. 2125555	VKPC 82434	
1.6 (160AF)	159A3.046 - 1581 cc	88 → 93	|→Mot. 2125556	VKPC 82431	VKPA 82431
1.6 (160AF)	159A3.046 - 1581 cc	88 → 93	AC, ⊖	VKPC 82245	
1.6 (160A1)	159A3.048 - 1581 cc	88 → 93		VKPC 82431	VKPA 82431
1.6 (160A1)	159A3.048 - 1581 cc	88 → 93	AC, ⊖	VKPC 82245	
1.6 (160AP)	1581 cc	88 → 91	DOHC	VKPC 82432	
1.6 (160EN)	160E2.011 - 1585 cc	93 →	~~AC~~	VKPC 82245	
1.6 (160EB)	835C1.000 - 1585 cc	93 →	~~AC~~	VKPC 82245	
1.6 (160AZ)	159A3.000 - 1585 cc	93 →		VKPC 82245	
1.6 (160EC)	159A3.048 - 1581 cc	93 →		VKPC 82450	
1.8 (160AY)	159A4.000 - 1756 cc	90 → 93		VKPC 82647	
1.8 (160ED, 160FD)	835C2.000 - 1756 cc	93 →		VKPC 82647	
1.8 (160EM)	835C4.000 - 1756 cc	93 →		VKPC 82647	
1.8 (160EQ)	836A5.000 - 1756 cc	93 →		VKPC 82647	
1.8 (160ER)	836A6.000 - 1756 cc	93 →		VKPC 82647	
1.8 i.e (160 AM)	159A4.000 - 1756 cc	90 → 93		VKPC 82432	
1.8 i.e sport 16V (160AN, 160AV)	159A4.000 - 1756 cc	89 → 93		VKPC 82432	
2.0 i.e 8V (160AJ, 160AT)	159A5.046 - 1995 cc	90 → 93	→|Mot. 1308142	VKPC 82622	
2.0 i.e 8V (160AJ, 160AT)	159A5.046 - 1995 cc	90 → 93	|→Mot. 1308143	VKPC 82647	
2.0 i.e 8V (160AJ, 160AT)	159A6.046 - 1998 cc	93 →		VKPC 82647	
2.0 i.e 8V (160ET)	159A6.011 - 1998 cc	93 →		VKPC 82647	
1.7 DIESEL (160 AG)	149B4.000 - 1697 cc	88 → 93	~~AC~~	VKPC 82429	VKPA 82429
1.7 DIESEL (160 EG)	149B4.000 - 1697 cc	93 → 04/95		VKPC 82429	VKPA 82429
1.7 DIESEL (160 EG)	149B4.000 - 1697 cc	04/95 →			VKPA 82429
1.9 DIESEL (160AH, 160EH)	160A7.000 - 1697 cc	88 → 04/95		VKPC 82429	VKPA 82429

www.bergab.ru Берг АБ bergab@ya.ru Тел. (495)-228-06-21, факс (495) 223-3071

www.bergab.ru Берг АБ bergab@ya.ru Тел. (495)-228-06-21, факс (495) 223-3071

1.9 DIESEL (160EH)	160A7.000 - 1929 cc	04/95 →			VKPA 82429
1.9 TURBO DIESEL (160AQ, 160AR)	160A6.000/046 - 1929 cc	88 → 93		VKPC 82618	VKPA 82618
1.9 TURBO DIESEL (160EL, 160GL)	160D1.000 - 1929 cc	93 →	→Mot. 1730139	VKPC 82618	VKPA 82618
1.9 TURBO DIESEL (160EI)	160A6.000 - 1929 cc	93 → 97		VKPC 82618	VKPA 82618
ULYSSE					
1.8 i.e (220BB5)	LFW - 1761 cc	07/94 →		VKPC 83615	
2.0 i.e 16V (220AL5/220AV5)	RFV - 1998 cc	07/94 →		VKPC 83636	
2.0 i.e TURBO (220AC5)	RFU - 1998 cc	07/94 →		VKPC 83420	
2.0 i.e TURBO (220AD5/220CD5)	RGX - 1998 cc	07/94 →		VKPC 83420	
1.9 TURBO DIESEL (220AE5/ 220AH5)	D8B/DHX - 1905 cc	07/94 →		VKPC 83420	
2.0 JTD TURBO DIESEL (220AN)	RHZ - 1997 cc	00 →		VKPC 83639	
2.1 TURBO DIESEL (220AJ5)	P8C - 2088 cc	07/94 →		VKPC 83425	
UNO					
0.9 (146A, 146E)	146A.048 - 903 cc	83 →			VKPA 82202
1.0 (146EB, 146FP)	146B4/146C7 - 994 cc	89 →		VKPC 82208	
1.0 (146A)	156A2.000 - 999 cc	83 → 89		VKPC 82214	
1.0 i.e (146EC, 146ED, 146EE, 146E5)	156A2 - 999 cc	89 →		VKPC 82214	
SX 1.1	160A3.000 - 1108 cc	83 → 89		VKPC 82206	VKPA 82222
SX 1.1 i.e	160A3.000 - 1108 cc	83 → 89		VKPC 82218	VKPA 82218
1.1 i.e (146EF, 146ET, 146EW)	146C3/160A3/156C.046 - 1108 cc	89 →		VKPC 82214	
1.1 (146A7, 146EJ)	146A6.000 - 1116 cc	88 →		VKPC 82208	
SX 1.3	138B2/149A7 - 1299 cc	83 → 89		VKPC 82206	VKPA 82222
SX 1.3 i.e	138B2/149A7 - 1299 cc	83 → 89		VKPC 82218	VKPA 82218
1.3 TURBO (146A, 146E)	146A2.246 - 1301 cc	89 → 93		VKPC 82218	VKPA 82218
1.4 (146EH, 146EI)	146C1/160A1.046 - 1372 cc	89 → 07/95		VKPC 82431	VKPA 82431
1.4 (146EH, 146EI)	146C1/160A1.046 - 1372 cc	07/95 →		VKPC 82246	VKPA 82246
1.4 (146EL)	160A1.048 - 1372 cc	89 →	~~AC~~	VKPC 82224	VKPA 82224
1.4 (146EL)	160A1.048 - 1372 cc	89 →	~~AC~~	VKPC 82431	VKPA 82431
1.4 (146EK)	146C2.028 - 1372 cc	89 → 07/95		VKPC 82431	VKPA 82431
1.4 (146EK)	146C2.028 - 1372 cc	07/95 →		VKPC 82246	VKPA 82246
1.4 TURBO i.e (146ER)	146A8/C1.000 - 1372 cc	89 → 93		VKPC 82206	VKPA 82222
1.4 TURBO i.e (146EQ)	146A2.246 - 1372 cc	89 → 93		VKPC 82218	VKPA 82218
1.4 TURBO (146EU)	146A8.046 - 1372 cc	89 → 93		VKPC 82431	
1.5 (146EM)	149C1.000 - 1498 cc	89 →	~~AC~~	VKPC 82218	VKPA 82218
1.5 (146EM)	149C1.000 - 1498 cc	89 →	AC	VKPC 82431	VKPA 82431
1.3 DIESEL	127A5.000 - 1301 cc	83 → 89		VKPC 82208	
1.3 DIESEL (146EN)	146B1.000 - 1301 cc	89 →		VKPC 82208	
1.7 DIESEL	149B3.000 - 1697 cc	83 → 89		VKPC 82428	VKPA 82428
CS 1.7 DIESEL (146AF, 146CI)	146B2/149B3 - 1697 cc	88 → 91			VKPA 82210
1.7 DIESEL (146EO)	146B2.000 - 1697 cc	89 →		VKPC 82428	VKPA 82428
1.9 DIESEL (146EP)	149B5.046 - 1929 cc	89 →		VKPC 82428	VKPA 82428
1.4 TURBO DIESEL	146B.000 - 1367 cc	83 → 89		VKPC 82426	VKPA 82426
1.4 TURBO DIESEL	146B3.000 - 1367 cc	89 →			VKPA 82440
X 1/9					
1.3 (128 AS)	128AS.000 - 1301 cc	78 → 87		VKPC 82206	VKPA 82206
1.5 (138 AS)	138AS/BS.000 - 1498 cc	78 → 87		VKPC 82206	VKPA 82222

FIAT COMMERCIAL

241					
1.4	124AZ2.000 - 1438 cc	67 → 76		VKPC 82404	
242					
2.2 DIESEL	B22-615 - 2175 cc	74 → 85		VKPC 83607	

www.bergab.ru Берг АБ bergab@ya.ru Тел. (495)-228-06-21, факс (495) 223-3071

FIAT COMMERCIAL .../...

2.5 DIESEL	B25-637 - 2500 cc	74 → 85		VKPC 83607	

850

0.9	100GF - 903 cc	68 → 73		VKPC 82204	
0.9	100GBC - 903 cc	68 → 74		VKPC 82204	

900

0.9	100GF - 903 cc	87 →		VKPC 82204	

DOBLO

1.2 8V (223AX, 223ZX)	223A5.000 - 1242 cc	00 →		VKPC 82250	
1.9 DIESEL (223AX, 223ZX)	223A6.000 - 1905 cc	00 →		VKPC 82665	

DUCATO

1.8	XM7T/169B - 1796 cc	82 → 93		VKPC 83630	
2.0	XN1T/170B/170C/170D - 1971 cc	82 → 93		VKPC 83630	
2.0 i.e (230)	R5B/RFW - 1998 cc	94 →		VKPC 83420	
1.9 DIESEL (290)	149B1.000 - 1930 cc	87 → 93			VKPA 82634
1.9 DIESEL (230)	DJY - 1930 cc	94 →		VKPC 83420	
1.9 DIESEL (230)	230A2 - 1929 cc	94 →			VKPA 82670
2.5 DIESEL (280)	8144 - 2445 cc	81 → 10/86		VKPC 82600	
2.5 DIESEL (280)	8144 - 2445 cc	10/86 → 90		VKPC 82643	
2.5 DIESEL	8144.67 - 2445 cc	90 → 94		VKPC 82643	
2.5 DIESEL	U25/651& U25/661 (CRD) - 2500 cc	81 → 90		VKPC 83617	
2.5 DIESEL (230)	8140.47R/67 - 2499 cc	94 →		VKPC 82652	
2.8 DIESEL (230)	8140.43/63 - 2800 cc	94 →		VKPC 82652	
1.9 TURBO DIESEL (290)	280/290A1.000 - 1930 cc	87 → 93			VKPA 82634
1.9 TURBO DIESEL (230)	DHX - 1930 cc	94 →		VKPC 83420	
1.9 TURBO DIESEL (230)	230A3 - 1929 cc	94 →	AC, ⊖		VKPA 82671
2.5 TURBO DIESEL (290)	8140.27 - 2445 cc	87 → 93		VKPC 82643	
2.5 TURBO DIESEL (230)	8140.47/47R - 2499 cc	94 →		VKPC 82652	
2.8 TURBO DIESEL (230)	8140.43 - 2800 cc	94 →		VKPC 82652	

FIORINO

0.9 (127A)	100 GL.000/100 GL.046 - 903 cc	78 → 81			VKPA 82202
1.05 (127A1, 147A)	127AB.0C0 - 1049 cc	78 → 88		VKPC 82208	
1.1 (146C4)	146A9.000 - 1116 cc	88 → 93		VKPC 82208	
1.3 (146AW, 146RA)	146A5.000 - 1301 cc	88 → 93		VKPC 82208	
1.3 (146RA)	146A5.000 - 1301 cc	93 →		VKPC 82208	
1.4 (146RB)	146C5.000 - 1372 cc	93 →		VKPC 82431	VKPA 82431
1.4 (146RE)	146D5.000 - 1372 cc	93 →		VKPC 82208	
1.5 i.e (146A9)	149C1.000 - 1498 cc	88 → 93		VKPC 82218	VKPA 82218
1.6 (146RC)	146C6.000 - 1581 cc	93 →		VKPC 82431	VKPA 82431
1.3 DIESEL (127A, 147A, 146CH)	127A5.000 - 1301 cc	81 → 93		VKPC 82208	
1.7 DIESEL (146AF, 146CI, 146CL)	146B2/149B3/146B4 - 1697 cc	88 → 93		VKPC 82210	VKPA 82210
1.7 DIESEL (146RD)	146B2.000 - 1697 cc	93 →	⊘	VKPC 82210	VKPA 82210

SCUDO

1.6i (220W, 220X, 220Y, 220Z)	220A2.000 - 1580 cc	95 →	⊘		VKPA 83431
1.6i (220W, 220X, 220Y, 220Z)	220A2.000 - 1580 cc	95 →	⊖		VKPA 83432
1.8 DIESEL (220)	DW8/WJZ - 1868 cc	98 →		VKPC 83639	
1.9 DIESEL (220)	D9B - 1905 cc	10/95 →		VKPC 83420	
1.9 TURBO DIESEL (220)	D8B/DHX - 1905 cc	10/95 →		VKPC 83420	
1.9 TURBO DIESEL (220)	220A2.000 - 1905 cc	10/95 →		VKPC 83420	
2.0 JTD TURBO DIESEL	RHX - 1997	99 →		VKPC 83639	

www.bergab.ru Берг АБ bergab@ya.ru Тел. (495)-228-06-21, факс (495) 223-3071

TALENTO					
2.0 (290U)	170B.000 - 1971 cc	88 →		**VKPC 83630**	
1.9 DIESEL (290U)	149B1.000 - 1930 cc	88 →			**VKPA 82634**

FORD

CAPRI					
1.3	JS/J1/J2/J3/KL13 - 1297 cc	12/68 → 08/70	OHV	**VKPC 84200**	
1.3	JS/J1/J2/J3/KL13 - 1297 cc	08/70 → 05/79	OHV	**VKPC 84201**	
1.3	JS/J1/J2/J3/KL13 - 1297 cc	05/79 → 07/80	OHV	VKPC 84202	
1.3	JA/TL13 - 1294 cc	12/68 → 11/79	OHC	**VKPC 84600**	
1.3	JA/TL13 - 1294 cc	11/79 → 02/87	OHC	**VKPC 84601**	
1.3 V4	JX/TV13 - 1305 cc	12/68 → 12/73		**VKPC 84400**	
1.5 V4	EX/EY/TV15 - 1498 cc	12/68 → 12/73		**VKPC 84400**	
1.6	LA/LC/LE/TL16 - 1593 cc	12/68 → 11/79	OHC	**VKPC 84600**	
1.6	LA/LC/LE/TL16 - 1593 cc	11/79 → 02/87	OHC	**VKPC 84601**	
1.7 V4	MY/TV17 - 1699 cc	12/68 → 12/71		**VKPC 84400**	
2.0	NE/TL20 - 1993 cc	12/68 → 11/79	OHC	**VKPC 84600**	
2.0	NE/TL20 - 1993 cc	11/79 → 02/87	OHC	**VKPC 84601**	
2.0 V6	NW/NX/NY/TV20 - 1999 cc	01/74 → 79	Fix.FAN	VKPC 84606	
2.0 V6	NW/NX/NY/TV20 - 1999 cc	01/74 → 79	Auto.FAN,	**VKPC 84607**	
2.0 V6	NW/NX/NY/TV20 - 1999 cc	79 → 04/86		**VKPC 84608**	
2.3 V6	YY/YZ/TV23 - 2294 cc	01/74 → 79	Fix.FAN	VKPC 84606	
2.3 V6	YY/YZ/TV23 - 2294 cc	01/74 → 79	Auto.FAN,	**VKPC 84607**	
2.3 V6	YY/YZ/TV23 - 2294 cc	79 → 04/86		**VKPC 84608**	
2.6 V6	OZ/UY/TV26 - 2551 cc	01/74 → 79	Fix.FAN	VKPC 84606	
2.6 V6	OZ/UY/TV26 - 2551 cc	01/74 → 79	Auto.FAN,	**VKPC 84607**	
2.6 V6	OZ/UY/TV26 - 2551 cc	79 → 04/86		**VKPC 84608**	
2.8 i.e V6	PR/PY/TV28 - 2792 cc	74 → 78		**VKPC 84607**	
2.8 i.e V6	PR/PY/TV28 - 2792 cc	79 → 04/85		**VKPC 84608**	
2.8 i.e V6	PR/PY/TV28 - 2792 cc	04/85 → 04/86		**VKPC 84609**	
CONSUL					
1.7 V6	MX/MY/TV17 - 1699 cc	12/68 → 12/73		**VKPC 84400**	
2.0	NE/TL20 - 1993 cc	02/72 → 08/77	OHC	**VKPC 84600**	
2.0 V6	NY/TV20 - 1999 cc	72 → 08/77	Fix.FAN	VKPC 84606	
2.0 V6	NY/TV20 - 1999 cc	74 → 01/79	Auto.FAN,	**VKPC 84607**	
2.3 V6	YY/TV23 - 2294 cc	72 → 08/77	Fix.FAN	VKPC 84606	
2.3 V6	YY/TV23 - 2294 cc	74 → 01/79	Auto.FAN,	**VKPC 84607**	
2.6 V6	UY/TV26 - 2551 cc	72 → 08/77	Fix.FAN	VKPC 84606	
2.6 V6	UY/TV26 - 2551 cc	74 → 01/79	Auto.FAN,	**VKPC 84607**	
CORSAIR					
1.5	A-KENT - 1498 cc	63 → 70	OHC	**VKPC 84200**	
1.7	D-V4 - 1699 cc	63 → 70		**VKPC 84400**	
2.0	D-V4 - 1998 cc	63 → 70		**VKPC 84400**	
CORTINA					
1.3	KL13 - 1297 cc	→ 70	OHV	**VKPC 84200**	
1.3	KL13 - 1297 cc	70 → 08/79	OHV	**VKPC 84201**	
1.3	KL13 - 1297 cc	09/79 → 82	OHV	VKPC 84202	
1.3	TL13 - 1294 cc	08/77 →	Fix.FAN, OHC	**VKPC 84600**	
1.3	TL13 - 1294 cc	08/77 →	Auto.FAN, OHC	**VKPC 84601**	
1.6	TL16 - 1593 cc	06/70 → 08/79	OHC	**VKPC 84600**	
1.6	TL16 - 1593 cc	08/79 → 08/82	OHC	**VKPC 84601**	
1.6	KL16 - 1598 cc	06/70 → 08/79	OHV	**VKPC 84201**	
2.0	TL20 - 1993 cc	06/70 → 08/79	OHC	**VKPC 84600**	
2.0	TL20 - 1993 cc	08/79 → 08/82	OHC	**VKPC 84601**	
2.3 V6	TV23 - 2294 cc	06/70 → 01/79		VKPC 84606	
2.3 V6	TV23 - 2294 cc	01/79 → 08/82	Auto.FAN,	**VKPC 84607**	

www.bergab.ru Берг АБ bergab@ya.ru Тел. (495)-228-06-21, факс (495) 223-3071

www.bergab.ru Берг АБ bergab@ya.ru Тел. (495)-228-06-21, факс (495) 223-3071

FORD .../...

2.3 V6	TV23 - 2294 cc	01/79 → 08/82	Auto.FAN,	**VKPC 84608**

COUGAR

2.0	ZH20 - 1989 cc	08/98 →		**VKPC 84415**

ESCORT

1.0	KL09 - 957 cc	67 → 08/70	OHV	**VKPC 84200**
1.0	KL09 - 957 cc	08/70 → 05/79	OHV	**VKPC 84201**
1.0	KL09 - 957 cc	05/79 → 08/80	OHV	VKPC 84202
1.1	G1/G2/KL11 - 1098 cc	67 → 08/70	OHV	**VKPC 84200**
1.1	G1/G2/KL11 - 1098 cc	08/70 → 05/79	OHV	**VKPC 84201**
1.1	G1/G2/KL11 - 1098 cc	05/79 → 08/80	OHV	VKPC 84202
1.1	GM/GP/HL11 - 1117 cc	08/80 → 01/86	CVH.	**VKPC 84207**
1.1	GM/GP/HL11 - 1117 cc	02/86 →	CVH.	**VKPC 84208**
1.1	GL/GS/GU/BL11 - 1118 cc	08/80 → 08/88	OHV	**VKPC 84205**
1.1	GL/GS/GU/BL11 - 1118 cc	08/88 → 05/91	OHV	**VKPC 84209**
1.1	GL/GS/GU/BL11 - 1118 cc	05/91 → 08/95	OHV	**VKPC 84210**
1.3	J1/J2/J3/KL13 - 1297 cc	67 → 08/70	OHV	**VKPC 84200**
1.3	J1/J2/J3/KL13 - 1297 cc	08/70 → 05/79	OHV	**VKPC 84201**
1.3	J1/J2/J3/KL13 - 1297 cc	05/79 → 07/80	OHV	VKPC 84202
1.3	JP/HL13 - 1296 cc	08/80 → 08/81	CVH.	VKPC 84206
1.3	JP/HL13 - 1296 cc	08/81 → 01/86	CVH.	**VKPC 84207**
1.3	JP/HL13 - 1296 cc	02/86 → 05/91	CVH.	**VKPC 84208**
1.3	JP/HL13 - 1296 cc	05/91 →	CVH.	**VKPC 84210**
1.3	JB/JL/J4/J6/BL13 - 1297 cc	01/86 → 08/88	OHV	**VKPC 84205**
1.3	JB/JL/J4/J6/BL13 - 1297 cc	08/88 → 05/91	OHV	**VKPC 84209**
1.3	JB/JL/J4/J6/BL13 - 1297 cc	05/91 → 01/95	OHV	**VKPC 84210**
1.4	FU/F6/HL14 - 1392 cc	08/80 → 01/86	CVH.	**VKPC 84207**
1.4	FU/F6/HL14 - 1392 cc	02/86 → 01/95	CVH.	**VKPC 84208**
1.6	LJ/LN/LP/LR/LU/L4/HL16 - 1597 cc	08/80 → 08/81	CVH.	VKPC 84206
1.6	LJ/LN/LP/LR/LU/L4/HL16 - 1597 cc	08/81 → 01/86	CVH.	**VKPC 84207**
1.6	LJ/LN/LP/LR/LU/L4/HL16 - 1597 cc	02/86 → 05/91	CVH.	**VKPC 84208**
1.6	TL16G - 1597 cc	01/75 → 08/80	OHC	**VKPC 84600**
1.6	TL16 - 1597 cc	08/83 →	OHC	**VKPC 84600**
1.6 i.e 16V	L1/ZH16 (zetec E) - 1597 cc	01/92 → 05/98		**VKPC 84406**
1.8 i.e 16V	RD/RK/RQ/ZH18 (zetec E) - 1796 cc	01/92 → 05/98		**VKPC 84406**
2.0	NE/TL20H - 1993 cc	01/75 → 08/80	OHC	**VKPC 84600**
2.0 i.e 16V	N5/N7/DH20 - 1993 cc	02/91 → 08/96	DOHC	**VKPC 84412**
1.6 DIESEL	LT - 1608 cc	02/84 → 12/88		**VKPC 84403**
1.8 DIESEL	RF/RT/RV//D18NA - 1753 cc	08/88 → 11/95		**VKPC 84620**
1.8 TURBO DIESEL	D18T - 1753 cc	06/90 → 04/93		**VKPC 84410**
1.8 TURBO DIESEL	D18TI - 1753 cc	06/93 →		**VKPC 84409**
1.8 TURBO DIESEL	D18TC - 1753 cc	08/95 →		**VKPC 84408**

FIESTA

1.0	TK/TL/BL09/KL09 - 957 cc	05/77 → 01/89	OHV	**VKPC 84205**
1.0	TK/TL/BL09/KL09 - 957 cc	01/89 → 05/91	OHV	**VKPC 84209**
1.0	TK/TL/BL09/KL09 - 957 cc	05/91 → 08/96	OHV	**VKPC 84210**
1.1	GL/GS/GU/BL11/KL11 - 1118 cc	05/77 → 01/89	OHV	**VKPC 84205**
1.1	HL11 - 1117 cc	08/80 → 01/86	CVH.	**VKPC 84207**
1.1	HL11 - 1117 cc	02/86 → 04/91	CVH.	**VKPC 84208**
1.1	GU/G6/BL11/KL11 - 1118 cc	01/89 → 05/91	OHV	**VKPC 84209**
1.1	GU/G6/BL11/KL11 - 1118 cc	05/91 → 08/96	OHV	**VKPC 84210**
1.2 16V	DH/ZH12 (zetec S) - 1242 cc	08/95 →		**VKPC 84215**
1.3	JP/HL13 - 1296 cc	08/80 → 01/86	CVH.	**VKPC 84207**
1.3	JP/HL13 - 1296 cc	02/86 → 04/91	CVH.	**VKPC 84208**
1.3	J3/BL13 - 1296 cc	05/77 → 01/89	OHV	**VKPC 84205**
1.3	J3/BL13 - 1296 cc	01/89 → 05/91	OHV	**VKPC 84209**
1.3	JB/J6/BL13 - 1296 cc	05/91 → 10/95	OHV	**VKPC 84210**
1.3	JB/J6/BL13 - 1296 cc	10/95 → 08/96	OHV	**VKPC 84216**
1.4	FU/F6/HL14 - 1392 cc	06/80 → 01/86	CVH.	**VKPC 84207**
1.4	FU/F6/HL14 - 1392 cc	02/86 → 08/96	CVH.	**VKPC 84208**

www.bergab.ru Берг АБ bergab@ya.ru Тел. (495)-228-06-21, факс (495) 223-3071

www.bergab.ru Берг АБ bergab@ya.ru Тел. (495)-228-06-21, факс (495) 223-3071

1.4 16V	FH/ZH14 (zetec S) - 1392 cc	08/95 →		VKPC 84215	
1.6	L3/KL16 - 1597 cc	76 → 01/84	OHV	VKPC 84205	
1.6	L3/KL16 - 1597 cc	02/84 → 01/86	OHV	VKPC 84207	
1.6	L3/KL16 - 1597 cc	02/86 → 08/96	OHV	VKPC 84208	
1.6	LH/LJ/LP/LU/HL16 - 1597 cc	06/80 → 01/86	CVH.	VKPC 84207	
1.6	LH/LJ/LP/LU/HL16 - 1597 cc	02/86 → 08/96	CVH.	VKPC 84208	
1.6 i.e 16V	L1/ZH16 (zetec E) - 1597 cc	03/92 → 08/95		VKPC 84406	
1.6 i.e 16V	ZH16 (zetec S) - 1597 cc	08/95 →		VKPC 84215	
1.8 i.e 16V	RD/RQ/ZH18 (zetec E) - 1796 cc	03/92 → 08/95		VKPC 84406	
1.6 DIESEL	LT - 1608 cc	02/84 → 12/88		VKPC 84403	
1.8 DIESEL	RT/D18NA - 1753 cc	01/89 → 10/95		VKPC 84620	
1.8 DIESEL	RT/D18NA - 1753 cc	11/95 →		VKPC 84620	
1.8 TURBO DIESEL	D18T - 1753 cc	01/89 → 04/93		VKPC 84410	
1.8 TURBO DIESEL	D18TI - 1753 cc	06/93 →		VKPC 84409	
FOCUS					
1.4 16V	FXD/ZH14 (zetec) - 1388 cc	10/98 →		VKPC 84215	
1.6 i.e 16V	FYD/ZH16 (zetec) - 1597 cc	10/98 →		VKPC 84215	
1.8 i.e 16V	EYD/ZH18 (zetec) - 1769 cc	10/98 →		VKPC 84415	
2.0 i.e 16V	EDD/ZH20 (zetec) - 1989 cc	10/98 →		VKPC 84415	
1.8 TURBO DIESEL (75HP & 90HP)	C9D/LD18TC - 1753 cc	01/99 →		VKPC 84416	
GALAXY					
2.0	NSE/DL20 - 1998 cc	05/95 →	DOHC	VKPC 84412	
2.3	Y5B/DH23 - 2294 cc	05/95 →	DOHC	VKPC 84412	
2.8 V6	AAA/VV28 - 2792 cc	11/94 →		VKPC 81611	
1.9 TDI	AFN/1Z/VW19 - 1896 cc	11/95 → 03/00		VKPC 81401	VKPA 81401
1.9 TDI	19TC/VW19 - 1896 cc	04/00 →		VKPC 81626	
GRANADA					
1.6	LCK/TL16 - 1593 cc	02/72 → 06/79	OHC	VKPC 84600	
1.6	LCK/TL16 - 1593 cc	06/79 → 05/89	OHC	VKPC 84601	
1.7 V4	MY/NW/TV17 - 1699 cc	77 → 83		VKPC 84400	
1.8	RE/TL18 - 1796 cc	02/72 → 06/79	OHC	VKPC 84600	
1.8	RE/TL18 - 1796 cc	06/79 → 10/94	OHC	VKPC 84601	
2.0	NE/NR/TL20 - 1993 cc	02/72 → 07/81	OHC	VKPC 84600	
2.0	NE/NR/TL20 - 1993 cc	06/79 → 10/94	Auto.FAN, ⊘, OHC	VKPC 84601	
2.0 V6	NW/NY/TV20 - 1999 cc	08/77 → 06/79	Fix.FAN	VKPC 84606	
2.0 V6	NW/NY/TV20 - 1999 cc	08/77 → 04/85	Auto.FAN,	VKPC 84607	
2.0 V6	NW/NY/TV20 - 1999 cc	08/77 → 04/85	Auto.FAN,	VKPC 84608	
2.0	N8/N9 - 1998 cc	05/85 → 01/91	DOHC	VKPC 84411	
2.0	N8/N9 - 1998 cc	02/91 → 10/94	DOHC	VKPC 84412	
2.3 V6	YY/TV23 - 2294 cc	08/77 → 06/79	Fix.FAN	VKPC 84606	
2.3 V6	YY/TV23 - 2294 cc	08/77 → 04/85	Auto.FAN,	VKPC 84607	
2.3 V6	YY/TV23 - 2294 cc	08/77 → 04/85	Auto.FAN,	VKPC 84608	
2.3 V6	YY/TV23 - 2294 cc	04/85 → 10/94		VKPC 84609	
2.8 V6	PR/PY/TV28 - 2792 cc	08/77 → 06/79	Fix.FAN	VKPC 84606	
2.8 V6	PR/PY/TV28 - 2792 cc	08/77 → 04/85	Auto.FAN,	VKPC 84607	
2.8 V6	PR/PY/TV28 - 2792 cc	08/77 → 04/85	Auto.FAN,	VKPC 84608	
2.8 V6	PR/PY/TV28 - 2792 cc	04/85 → 10/94		VKPC 84609	
2.9 V6	BO/BR - 2933 cc	86 →		VKPC 84405	
1.9 DIESEL	GD19 - 1900 cc	11/77 → 08/82		VKPC 83616	
2.1 DIESEL	WTA/GD21 - 2212 cc	11/77 → 08/82		VKPC 83616	
2.5 DIESEL	ST/XD3P - 2498 cc	08/82 → 02/92		VKPC 83423	
2.5 TURBO DIESEL	SC/SF/XD3T - 2498 cc	12/88 → 08/93		VKPC 83604	
2.5 TURBO DIESEL	SC/SF/VM25T - 2499 cc	08/93 → 09/96		VKPC 82642	
2.5 TURBO DIESEL	SC/SF/VM25T - 2499 cc	09/96 →		VKPC 82810	
IKON (GF)					
1.3	BL13 - 1296 cc	02/00 →	HCS.	VKPC 84216	
1.8 DIESEL	RT/D18NA - 1753 cc	11/99 →		VKPC 84620	

www.bergab.ru Берг АБ bergab@ya.ru Тел. (495)-228-06-21, факс (495) 223-3071

FORD .../...

KA

1.3	JJA/J4C - 1299 cc	96 →		VKPC 84216

MONDEO (FD/GD/GE)

1.6	L1/ZH16 (zetec E) - 1597 cc	02/93 → 05/98		VKPC 84407
1.6	L1/ZH16 (zetec E) - 1597 cc	05/98 →		VKPC 84415
1.8	RK/ZH18 (zetec E) - 1796 cc	02/93 → 05/98		VKPC 84407
1.8	RK/ZH18 (zetec E) - 1796 cc	05/98 →		VKPC 84415
2.0	NGA/ZH20 (zetec E) - 1998 cc	02/93 → 05/98		VKPC 84407
2.0	NGA/ZH20 (zetec E) - 1998 cc	05/98 →		VKPC 84415
1.8 TURBO DIESEL	RF/D18TI - 1753 cc	09/93 →		VKPC 84408

ORION

1.3	JPA/HL13 - 1296 cc	06/83 → 12/85	CVH.	VKPC 84207
1.3	JPA/HL13 - 1296 cc	01/86 → 07/93	CVH.	VKPC 84208
1.3	JB/JL/BL13 - 1297 cc	01/86 → 08/88	OHV	VKPC 84205
1.3	JB/J6/BL13 - 1297 cc	08/88 → 05/91	OHV	VKPC 84209
1.3	JB/J6/BL13 - 1297 cc	05/91 → 07/93	OHV	VKPC 84210
1.4	F6/FU/HL14 - 1392 cc	06/83 → 01/86	CVH.	VKPC 84207
1.4	F6/FU/HL14 - 1392 cc	02/86 → 07/93	CVH.	VKPC 84208
1.6	LP/LR/HL16 - 1597 cc	05/83 → 12/85	CVH.	VKPC 84207
1.6	LJ/LR/LU/L4/HL16 - 1597 cc	01/86 → 07/90	CVH.	VKPC 84208
1.6 i.e 16V	L1/ZH16 (zetec E) - 1597 cc	01/92 → 08/93		VKPC 84406
1.8 i.e 16V	RD/RQ/ZH18 (zetec E) - 1796 cc	01/92 → 08/93		VKPC 84406
1.6 DIESEL	LT - 1608 cc	02/84 → 12/88		VKPC 84403
1.8 DIESEL	RT/D18NA - 1753 cc	08/88 → 04/93		VKPC 84620
1.8 TURBO DIESEL	RF/RT/D18T - 1753 cc	06/90 → 05/93		VKPC 84410
1.8 TURBO DIESEL	RF/RT/D18T - 1753 cc	06/93 →		VKPC 84409

PICKUP

1.3	BL13E - 1297 cc	07/97 →		VKPC 84216

PROBE

2.5 V6	KL - 2496 cc	10/92 → 08/94		VKPC 94602
2.5 V6	JP25/KL - 2496 cc	08/94 → 09/97		VKPC 94603

PUMA

1.4	FH/ZH14 (zetec) - 1392 cc	06/97 →		VKPC 84215
1.7	MH/ZH17 (zetec) - 1679 cc	06/97 →		VKPC 84215

SCORPIO

1.8	REC/TL18 - 1753 cc	04/85 → 05/89		VKPC 84601
2.0	NE/NR/TL20 - 1993 cc	04/85 → 05/89		VKPC 84601
2.0 i.e	NS/N3/DH20 - 1993 cc	10/94 →	DOHC	VKPC 84411
2.4 i.e V6	AR - 2394 cc	05/85 →		VKPC 84405
2.8 i.e V6	PR - 2792 cc	05/85 → 01/87		VKPC 84609
2.9 i.e V6	BO/BR - 2933 cc	05/85 →		VKPC 84405
2.5 DIESEL	STR/XD3P - 2498 cc with THT	05/85 → 10/94		VKPC 83423
2.5 TURBO DIESEL	SC/SF/VM25T - 2499 cc	05/85 → 08/93		VKPC 83604
2.5 TURBO DIESEL	SC/SF/VM25T - 2499 cc	08/93 → 09/96		VKPC 82642
2.5 TURBO DIESEL	SC/SF/VM25T - 2499 cc	09/96 →		VKPC 82810

SIERRA

1.3	JC/TL13 - 1294 cc	06/82 → 02/93	⊘, OHC	VKPC 84600
1.3	JC/TL13 - 1294 cc	06/82 → 02/93	⊖, OHC	VKPC 84601
1.6	LC/LS/TL16 - 1593 cc	06/82 → 02/93	⊘, OHC	VKPC 84600

www.bergab.ru Берг АБ bergab@ya.ru Тел. (495)-228-06-21, факс (495) 223-3071

1.6	LC/LS/TL16 - 1593 cc	06/82 → 02/93	⊖, OHC	**VKPC 84601**
1.8	RE/TL18 - 1796 cc	06/82 → 02/93	⊘, OHC	**VKPC 84600**
1.8	RE/TL18 - 1796 cc	06/82 → 02/93	⊖, OHC	**VKPC 84601**
1.8	R2/R6/HL18 - 1769 cc	06/88 → 02/93	CVH.	**VKPC 84610**
2.0	NA/NE/NR/N4/TL20 - 1993 cc	06/82 → 02/93	⊘, OHC	**VKPC 84600**
2.0	NA/NE/NR/N4/TL20 - 1993 cc	06/82 → 02/93	⊖, OHC	**VKPC 84601**
2.0 i.e	N8/N9 - 1998 cc	09/88 → 01/91	DOHC	**VKPC 84411**
2.0 i.e	N8/N9 - 1998 cc	02/91 → 93	DOHC	**VKPC 84412**
2.0 V6	NYT/TV20 - 1999 cc	82 → 10/84	Auto.FAN,	**VKPC 84607**
2.0 V6	NYT/TV20 - 1999 cc	82 → 10/84	Auto.FAN,	**VKPC 84608**
2.0 V6	NYT/TV20 - 1999 cc	11/84 →		**VKPC 84609**
2.3 V6	YYT/TV23 - 2294 cc	06/82 → 10/84		**VKPC 84608**
2.3 V6	YYT/TV23 - 2294 cc	11/84 → 01/87		**VKPC 84609**
2.8 V6	PR/TV28 - 2792 cc	06/82 → 10/84		**VKPC 84608**
2.8 V6	PR/TV28 - 2792 cc	11/84 → 12/92		**VKPC 84609**
2.9 V6	B4A/B4B/B4C - 2933 cc	01/87 → 12/92		**VKPC 84405**
1.8 DIESEL	RF/D18NA - 1753 cc	08/90 → 12/92		**VKPC 84620**
2.3 DIESEL	YTT/YTR - 2304 cc	08/82 → 02/92		**VKPC 83423**
1.8 TURBO DIESEL	D18T - 1753 cc	08/90 → 12/92		**VKPC 84410**
2.5 TURBO DIESEL	PD25T - 2498 cc	08/88 →		**VKPC 83604**

TAUNUS

12 V4 12M/MP4	PX/TV12 - 1183 cc	09/66 → 07/70		**VKPC 84400**
1.3	JA/JC/TL13 - 1294 cc	06/70 → 06/79	OHC	**VKPC 84600**
1.3	JA/JC/TL13 - 1294 cc	07/79 → 08/82	OHC	**VKPC 84601**
1.5 V4 15M	EX/EY/TV15 - 1498 cc	09/66 → 07/70		**VKPC 84400**
1.6	LA/LC/LE/TL16 - 1593 cc	06/70 → 07/79	OHC	**VKPC 84600**
1.6	LA/LC/LE/TL16 - 1593 cc	08/79 → 08/82	OHC	**VKPC 84601**
1.7 V4 17M	MX/MY/TV17 - 1699 cc	08/64 → 01/72		**VKPC 84400**
2.0	NE/TL20 - 1993 cc	06/70 → 07/79	OHC	**VKPC 84600**
2.0	NE/TL20 - 1993 cc	08/79 → 08/82	OHC	**VKPC 84601**
2.0 V4 20M P5	NX/NY/TV20 - 1998 cc	08/64 → 08/67		**VKPC 84400**
2.0 V6	NX/NY/TV20 - 1998 cc	→ 01/79	Fix.FAN	VKPC 84606
2.0 V6	NX/NY/TV20 - 1998 cc	→ 01/79	Auto.FAN,	**VKPC 84607**
2.0 V6	NX/NY/TV20 - 1998 cc	01/79 → 10/84		**VKPC 84608**
2.0 V6	NX/NY/TV20 - 1998 cc	10/84 → 12/88		**VKPC 84609**
2.3 V6	YY/YZ/TV23 - 2294 cc	→ 01/79	Fix.FAN	VKPC 84606
2.3 V6	YY/YZ/TV23 - 2294 cc	→ 01/79	Auto.FAN,	**VKPC 84607**
2.3 V6	YY/YZ/TV23 - 2294 cc	01/79 → 10/84		**VKPC 84608**
2.3 V6	YY/YZ/TV23 - 2294 cc	10/84 → 12/88		**VKPC 84609**
2.4 V6	TV24 - 2400 cc	→ 08/96		**VKPC 84405**
2.6 V6	UY/TV26 - 2551 cc	→ 01/79	Fix.FAN	VKPC 84606
2.6 V6	UY/TV26 - 2551 cc	→ 01/79	Auto.FAN,	**VKPC 84607**
2.6 V6	UY/TV26 - 2551 cc	01/79 → 02/85		**VKPC 84608**
2.8 i.e V6	TV28 - 2792 cc	74 → 78		**VKPC 84607**
2.8 i.e V6	TV28 - 2792 cc	01/79 → 10/84		**VKPC 84608**
2.8 i.e V6	TV28 - 2792 cc	10/84 → 12/88		**VKPC 84609**
2.9 V6	TV29 - 2900 cc	→ 08/96		**VKPC 84405**
2.9 Cosworth V6 24v	TV29 - 2900 cc	→ 10/94		**VKPC 84405**

FORD COMMERCIAL

COURIER

1.0	HCS TLB - 957 cc	01/89 → 05/91		**VKPC 84209**
1.0	HCS TLB - 957 cc	05/91 →		**VKPC 84210**
1.1	HCS GUE/D - 1118 cc	01/89 → 05/91		**VKPC 84209**
1.1	HCS GUE/D - 1118 cc	05/91 →		**VKPC 84210**
1.4	HL14 - 1392 cc	01/89 →	CVH.	**VKPC 84208**
1.8 DIESEL	RTC/D18NA - 1753 cc	01/89 →		**VKPC 84620**

P100

1.6	LC/TL16 - 1593 cc	04/82 → 10/87	Auto.FAN, OHC	**VKPC 84601**
2.0	NA/TL20 - 1993 cc	10/87 → 04/93	Auto.FAN, OHC	**VKPC 84601**

www.bergab.ru Берг АБ bergab@ya.ru Тел. (495)-228-06-21, факс (495) 223-3071

www.bergab.ru Берг АБ bergab@ya.ru Тел. (495)-228-06-21, факс (495) 223-3071

FORD COMMERCIAL .../...

2.0	NA/TL20 - 1993 cc	10/87 → 04/93	Fix.FAN, OHC	**VKPC 84600**
1.8 DIESEL	RF/D18NA - 1753 cc	04/89 → 04/93		**VKPC 84620**
1.8 TURBO DIESEL	D18T - 1753 cc	04/89 → 04/93		**VKPC 84410**

TRANSIT FT

1.3 V4	JX/TV13 (V4) - 1305 cc	12/65 → 02/78		**VKPC 84400**
1.5 V4	EX/TV15 (V4) - 1498 cc	12/65 → 02/78		**VKPC 84400**
1.6	B/LA/TL16 - 1593 cc	01/79 → 08/91	Auto.FAN, OHC	**VKPC 84601**
1.6	B/LA/TL16 - 1593 cc	01/78 → 08/91	Fix.FAN, OHC	**VKPC 84600**
1.6	B/LA/TL16 - 1593 cc	08/91 → 08/94	OHC	**VKPC 84601**
1.7 V4	EY/MX/TV17 (V4) - 1699 cc	12/65 → 02/78		**VKPC 84400**
2.0	C/NA/N6/TL20 - 1993 cc	01/79 → 08/91	Auto.FAN, OHC	**VKPC 84601**
2.0	C/NA/N6/TL20 - 1993 cc	01/78 → 08/91	Fix.FAN, OHC	**VKPC 84600**
2.0	NB/NC/TL20 - 1993 cc	08/91 → 08/94	OHC	**VKPC 84601**
2.0 V4	NX/TV20 (V4) - 1998 cc	12/65 → 02/78		**VKPC 84400**
2.9 V6	B4T - 2933 cc	01/86 → 07/91	OHV	**VKPC 84405**
2.4 DIESEL	4A/G/J - 2358 cc	08/70 → 03/84	Fix.FAN	**VKPC 84603**
2.4 DIESEL	4A/G/J - 2358 cc	01/80 →	Auto.FAN	**VKPC 84616**
2.4 DIESEL	4A/G/J - 2358 cc	03/84 → 11/85	Fix.FAN	**VKPC 84617**
2.4 DIESEL	4A/G/J - 2358 cc	11/85 →	Fix.FAN	**VKPC 84618**
2.5 DIESEL	M - 2496 cc	03/84 → 11/85		**VKPC 84617**
2.5 DIESEL	4A/4B/4D/4F/4H - 2496 cc	12/85 →		**VKPC 84618**

HONDA

ACCORD

1.6 (CA4 / CA5)	A16A - 1590 cc	86 →		**VKPC 93410**
1.6 (SY)	EP/EL - 1602 cc	09/81 → 06/83		**VKPC 93405**
1.6 (CA4)	A16A - 1590 cc	89 →		**VKPC 93410**
1.8 (SZ)	EK - 1750 cc	09/81 → 06/83		**VKPC 93405**
1.8 (AC / AD 100)	ET - 1750 cc	82 → 87		VKPC 93409
1.8 (AC / AD 100)	ES - 1829 cc	82 → 87		VKPC 93409
1.8 (CB1/CB3/CB7)	F18A - 1849 cc	89 →		**VKPC 93601**
1.8 (CC7/CE7)	F18A - 1849 cc	94 →		**VKPC 93601**
2.0 (CA5)	A20A - 1955 cc	86 →	SOHC	**VKPC 93410**
2.0 (CA5)	A20A - 1955 cc	86 →	DOHC	**VKPC 93600**
AERODECK 2.0 (CE2)	F20B - 1997 cc	94 → 97		**VKPC 93601**
2.0 (CB1/CB3)	F20A - 1997 cc	89 → 93		**VKPC 93601**
2.0 COUPE (CC1)	F20A7 - 1997 cc	92 →	DOHC	**VKPC 93601**
2.0 COUPE (CD9)	F20B - 1997 cc	94 → 97		**VKPC 93601**
2.0 i.e 16V (CC7/CE8)	F20Z - 1997 cc	93 →		**VKPC 93601**
2.2 i.e (CB7/CB8/CB9/CC9)	F22A - 2156 cc	89 → 93		**VKPC 93601**
2.2 COUPE (CD7)	F22B - 2156 cc	94 → 97		**VKPC 93601**
2.2 (CE9)	F22Z - 2156 cc	94 →		**VKPC 93601**
AERODECK 2.2 (CE1)	F22B - 2156 cc	94 → 97		**VKPC 93601**
2.3 (CC7)	H23A - 2258 cc	01/93 →		VKPC 87814
2.0 TURBO DIESEL (CF1)	20T2 - 1994 cc	96 →		**VKPC 87813**

CIVIC/BALLADE

1.2 (AG/AN/AL/AJ/AK/AM)	ZA - 1187 cc	→ 84		**VKPC 93205**
1.2 (AG/AN/AL/AJ/AK/AM)	ZA - 1187 cc	84 →		**VKPC 93205**
1.2 (EC7/EC8/EC9, ED6/ED7)	D12B - 1200 cc	86 → 92		**VKPC 87404**
1.3 (SL/SS/WC)	EN - 1335 cc	79 →		VKPC 93207
1.3 (VC)	EN - 1350 cc	09/78 → 10/81		VKPC 93207
1.3 (AE/AG/AJ/VJ)	EV-10/12 - 1342 cc	10/83 → 09/87		**VKPC 93205**
1.3 (AG/AN/AL/AJ/AK/AM)	EV - 1342 cc	→ 84		**VKPC 93205**
1.3 (AG/AN/AL/AJ/AK/AM)	EV - 1342 cc	84 →		**VKPC 93205**
1.3 (EC7/EC8/EC9, ED6/ED7)	D13B - 1342 cc	86 → 92		**VKPC 87404**
1.3 (EG3/EG4/EG5/EG6)	D13B - 1342 cc	92 →		**VKPC 87404**
1.4 (EC7/EC8/EC9, ED6/ED7)	D14A - 1396 cc	86 → 92		**VKPC 87404**
1.4 (MA8)	D14A - 1396 cc	95 → 97		**VKPC 87404**

www.bergab.ru Берг АБ bergab@ya.ru Тел. (495)-228-06-21, факс (495) 223-3071

www.bergab.ru Берг АБ bergab@ya.ru Тел. (495)-228-06-21, факс (495) 223-3071

1.4i 16V	1396 cc	97 →	SOHC	VKPC 93210
1.5 (SR/ST/WD)	EM - 1488 cc	06/79 → 09/83		VKPC 93405
1.5 (AH/AK/AR/AF)	EW - 10/12/50 - 1488 cc	09/83 → 09/87		VKPC 93205
1.5 (AG/AN/AL/AJ/AK/AM)	EW - 1488 cc	→ 84		VKPC 93205
1.5 (AG/AN/AL/AJ/AK/AM)	EW - 1488 cc	84 →		VKPC 93205
1.5 (MA9)	D15Z - 1493 cc	95 → 96		VKPC 93411
1.5 i.e (EC7/EC8/EC9, ED6/ED7)	D15B - 1488 cc	86 → 92		VKPC 87404
1.5 i.e (EG3/EG4/EG5/EG6)	D15B - 1488 cc	92 →		VKPC 87404
1.5 i.e (EG8/EG9, EH9)	D15B - 1488 cc	94 →	SOHC	VKPC 87404
1.5 i.e (EG8/EG9, EH9)	D15Z - 1500 cc	94 →	SOHC	VKPC 87404
1.5i 16V	SOHC - 1493 cc	97 →		VKPC 93210
1.6 Coupé (EJ1)	D16Z - 1590 cc	94 →	SOHC	VKPC 93411
1.6 (EK4)	B16A - 1797 cc	96 →	DOHC	VKPC 93415
1.6 (MB1)	D16Y - 1590 cc	95 → 97		VKPC 87404
1.6i	1590 cc	97 →	SOHC	VKPC 93210
1.6i 16V	1590 cc	97 →	SOHC	VKPC 93210
1.6 i.e (EC7/EC8/EC9, ED6/ED7)	D16A/Z - 1590 cc	86 → 92		VKPC 87404
1.6 i.e (EG3/EG9)	B16A - 1590 cc	92 →	DOHC	VKPC 93601
1.6 i.e (EG3/EG6)	D16Z - 1590 cc	92 →	SOHC	VKPC 93411
1.6 i.e (EG8/EG9, EH9)	D16Z - 1590 cc	94 →	SOHC	VKPC 93411
1.6 i.e 16V (EC7/EC8/EC9, ED6/ ED7)	D16A - 1590 cc	86 → 92	DOHC	VKPC 87404
1.6 i.e 16V (EE6/EE8)	B16A - 1590 cc	90 →	DOHC	VKPC 93601
1.8 (MB6)	B18C - 1797 cc	97 →		VKPC 93415
AERODECK 1.8 (MC2)	B18C - 1797 cc	98 →		VKPC 93415
2.0 TURBO DIESEL (MB7)	20T2 - 1994 cc	97 →		VKPC 87813
AERODECK 2.0 TURBO DIESEL (MC3)	20T2 - 1994 cc	98 →		VKPC 87813

CIVIC SHUTTLE

1.4 (EE1)	D14A - 1396 cc	88 → 91		VKPC 87404
1.5 (EE2)	D15B - 1493 cc	88 → 91		VKPC 87404
1.6 (EE4)	D16A/Z - 1590 cc	88 →		VKPC 87404

CONCERTO

1.4 (HW)	D14A - 1396 cc	90 → 96		VKPC 87404
1.5 i.e (HW)	D15B - 1488 cc	90 → 96		VKPC 87404
1.6 (HW)	D16Z - 1590 cc	90 → 96		VKPC 87404
1.6 (HW)	D16A - 1595 cc	90 → 96		VKPC 87404
1.8 TURBO DIESEL	1769 cc	01/94 →		VKPC 83420

CRX

1.4 (EE6)	D14A - 1396 cc	88 → 91		VKPC 87404
1.4 (EE6)	D14A - 1396 cc	91 →		VKPC 93601
1.5 (AF/AS)	EW - 1488 cc	84 →		VKPC 93205
1.6 (AF/AS)	ZC1 - 1590 cc	84 →		VKPC 93413
1.6 (EH6)	D16Z - 1590 cc	92 → 97		VKPC 93411
1.6 (EE8)	B16A - 1595 cc	89 → 91	DOHC	VKPC 87404
1.6 (EG2)	B16A - 1595 cc	92 → 97	DOHC	VKPC 93411
1.6 (ED9)	D16Z - 1590 cc	88 → 91		VKPC 87404
1.6 (ED9)	D16A - 1595 cc	88 → 91		VKPC 87404

LEGEND

2.0	C20A - 1995 cc	85 →		VKPC 87610
2.5 (HS)	C25A - 2493 cc	86 → 91		VKPC 87610
2.7 (HS)	C27A - 2675 cc	87 → 88		VKPC 87610
COUPE 2.7 (KA3/KA4)	C27A - 2675 cc	88 → 90		VKPC 87610

ODYSSEY

2.3 (RA3)	F23A - 2259 cc	98 →		VKPC 93601

www.bergab.ru Берг АБ bergab@ya.ru Тел. (495)-228-06-21, факс (495) 223-3071

www.bergab.ru Берг АБ bergab@ya.ru Тел. (495)-228-06-21, факс (495) 223-3071

HONDA .../...

PRELUDE

1.6 (SN-800/810/322/522)	EL - 1602 cc	82 →		**VKPC 93405**
1.8 (SN)	EK - 1750 cc	10/81 → 11/82		**VKPC 93405**
1.8 (AB)	ET - 1829 cc	→ 83		VKPC 93409
1.8 (AB)	ET - 1829 cc	84 →		VKPC 93409
2.0 (AB/BA2/BA3)	B20A - 1958 cc	86 →		VKPC 93409
2.0 (BB3)	F20A - 1997 cc	92 → 95		**VKPC 93601**
2.0 i.e (AB/BA2/BA3)	B20A - 1958 cc	86 →		**VKPC 93410**
2.0 i.e (BA4/BA5)	B20A - 1958 cc	87 →	Carbu.	**VKPC 93600**
2.0 i.e (BB9)	F20A - 1997 cc	97 →		**VKPC 93601**
2.0 i.e 16V (AB/BA2/BA3)	B20A - 1958 cc	86 →	DOHC	**VKPC 93600**
2.0 i.e 16V (BA4/BA5)	B20A - 1958 cc	87 →	Injec.	VKPC 93602
2.0 i.e 16V (BA)	F20A4 - 1997 cc	94 →		**VKPC 93601**
2.2 i.e 16V (BA)	2156 cc	94 →	SOHC	**VKPC 93601**
2.3 (BB2)	H23A - 2259 cc	92 → 96		VKPC 87814

QUINT/INTEGRA

1.5 (DA-2)	EW - 1488 cc	10/86 → 04/87		**VKPC 93205**
1.6 (AV)	EW - 1590 cc	86 → 90		**VKPC 93205**
1.6 (AV)	ZC - 1590 cc	87 → 90		**VKPC 87404**
1.6 (SU)	EP - 1602 cc	04/82 → 01/85		**VKPC 93405**
1.6 (SU)	EL - 1602 cc	82 → 85		**VKPC 93405**
COUPE 1.8 (DC2)	B18C - 1797 cc	98 →		**VKPC 93415**

SHUTTLE

2.2 (RA1)	F22B - 2156 cc	95 → 97		**VKPC 93601**
2.3 (RA3)	F23A - 2259 cc	98 →		**VKPC 93601**

HYUNDAI

ACCENT

1.3	G4EHR - 1341 cc	11/94 →		**VKPC 95423**
1.5	G4EK - 1495 cc	11/94 →		**VKPC 95424**

EXCEL

1.3	G4DG - 1298 cc	89 →		**VKPC 95008**
1.5	G4DJ - 1468 cc	89 →		**VKPC 95008**

LANTRA

1.5	G4DJ - 1468 cc	12/90 →		**VKPC 95008**
1.6	G4CR - 1596 cc	12/90 →		**VKPC 95427**
1.8	G4CN - 1836 cc	09/91 →		**VKPC 95424**
1.9 DIESEL	XUD - 1905 cc	95 →		**VKPC 83420**

PONY

1.2	4G36 - 1238 cc	11/78 → 10/85		VKPC 95002
1.3	G4DG - 1298 cc	10/85 →		**VKPC 95008**
1.4	4G33 - 1439 cc	11/78 → 10/85		VKPC 95002
1.5	G4DJ - 1468 cc	10/85 →		**VKPC 95008**

SCOUPE

1.5	G4DJ - 1468 cc	03/90 →		**VKPC 95008**
1.5	G4EK - 1468 cc	03/90 →		**VKPC 95008**

www.bergab.ru Берг АБ bergab@ya.ru Тел. (495)-228-06-21, факс (495) 223-3071

www.bergab.ru Берг АБ bergab@ya.ru Тел. (495)-228-06-21, факс (495) 223-3071

SONATA					
1.8	G4CM - 1795 cc	10/88 →		**VKPC 95611**	
2.0	G4CP - 1997 cc	10/88 →		**VKPC 95611**	
2.4	G4CS - 2351 cc	10/88 →		**VKPC 95611**	
3.0	G4AT - 2972 cc	10/88 →		VKPC 95610	
STELLAR					
1.4	4G33 - 1439 cc	84 → 86		VKPC 95002	
1.6	4G32B - 1597 cc	84 → 89		VKPC 95002	

INNOCENTI

ELBA					
1.3	1301 cc	91 → 92		**VKPC 82208**	
1.4	146C5 - 1372 cc	93 →	→|Mot. 9470268	**VKPC 82431**	**VKPA 82431**
1.4	146C5 - 1372 cc	93 →	|→Mot. 9470269	**VKPC 82246**	**VKPA 82246**
1.5 (146A9)	149C1 - 1498 cc	93 → 94		**VKPC 82218**	**VKPA 82218**
1.6	146C6 - 1580 cc	93 →	→|Mot. 9470268	**VKPC 82431**	**VKPA 82431**
1.6	159A2 - 1580 cc	93 →	|→Mot. 9470269	**VKPC 82246**	**VKPA 82246**
1.7 DIESEL	146B2/B4 - 1697 cc	93 → 97			**VKPA 82210**
MILLE					
1.0 (146)	146C7.000 - 994 cc	02/93 → 97		**VKPC 82208**	
MINITRE					
1.0	CB22 - 993 cc	84 → 87		**VKPC 87203**	
1.0 DIESEL	CB60 - 993 cc	84 → 87		**VKPC 87203**	
990					
1.0	CB22 - 993 cc	86 → 90		**VKPC 87203**	
1.0 DIESEL	CB60 - 993 cc	86 → 90		**VKPC 87203**	

ISUZU

117 COUPE					
2.2 DIESEL (PAD-96)	C223 - 2238 cc	12/79 → 05/81		**VKPC 98000**	
BIGHORN					
2.2 DIESEL (UBS-52)	C223 - 2238 cc	09/81 → 11/89		**VKPC 98000**	
ELF 350					
2.2 DIESEL (UFR-52)	C223 - 2238 cc	01/83 →		**VKPC 98000**	
FASTER RODEO					
2.0 DIESEL (KBD-21/22/26/40/41/46)	C190 - 1951 cc	10/80 → 05/88		**VKPC 98000**	
2.2 TURBO DIESEL (KBD-22/27/42/47)	C223T - 2238 cc	12/82 → 05/88		**VKPC 98000**	
FLORIAN / ASKA					
2.0 DIESEL (PAD-30)	C190 - 1951 cc	12/79 → 08/83		**VKPC 98000**	

www.bergab.ru Берг АБ bergab@ya.ru Тел. (495)-228-06-21, факс (495) 223-3071

www.bergab.ru Берг АБ bergab@ya.ru Тел. (495)-228-06-21, факс (495) 223-3071

ISUZU .../...

TROOPER

2.2 DIESEL (UBS-52)	C223 - 2238 cc	09/81 → 11/89		VKPC 98000	

IVECO

DAILY / GRINTA

2.5 (28.8/30.8/32.8/35.8/40.8)	8140.61 - 2445 cc	→ 90		VKPC 82630	
2.5 (28.8/30.8/32.8/35.8/40.8)	8140.61 - 2445 cc	90 →		VKPC 82630	
2.5 TURBO DIESEL (35.10)	8140.21 - 2445 cc	→ 90		VKPC 82631	
2.5 TURBO DIESEL (35.10)	8140.21 - 2445 cc	90 →		VKPC 82630	
2.5 TURBO DIESEL (40.10/45.10/ 49.10)	8140.21 - 2445 cc	→ 90		VKPC 82631	
2.5 TURBO DIESEL (40.10/45.10/ 49.10)	8140.21 - 2445 cc	90 →		VKPC 82630	
2.5 TURBO DIESEL (28.8/30.8/ 32.8/35.8)	8140.61 - 2445 cc	90 → 91	Auto.FAN	VKPC 82606	
2.5 TURBO DIESEL (28.8/30.8/ 32.8/35.8)	8140.61 - 2445 cc	91 →	Auto.FAN	VKPC 82650	
2.5 TURBO DIESEL (35.12)	8140.61 - 2445 cc	→ 91	Auto.FAN	VKPC 82649	
2.5 TURBO DIESEL (35.12)	8140.61 - 2445 cc	91 →	Auto.FAN	VKPC 82651	
2.5 TURBO DIESEL (35.10/40.8/ 40.10)	8140.61 - 2445 cc	90 →	Auto.FAN	VKPC 82606	

KIA

MENTOR

1.5	B5 - 1490 cc	10/91 →		VKPC 94002	
1.6	B6 - 1598 cc	10/91 →	SOHC	VKPC 94002	

PRIDE

1.1	B1 - 1138 cc	92 →		VKPC 94002	
1.3	B3 - 1323 cc	91 →		VKPC 94002	
1.3 16V	E3 - 1296 cc	93 →		VKPC 94202	

SEPHIA

1.5	B5 - 1490 cc	10/91 →		VKPC 94002	
1.6	B6 - 1598 cc	10/91 →	SOHC	VKPC 94002	

SPORTAGE

2.0	FE - 1998 cc	08/94 →	SOHC	VKPC 94424	
2.0	FE - 1998 cc	08/94 →	DOHC	VKPC 94425	

LADA

LADA/NUOVA (2101/2102/2103/2104/2105)

1.2	BA3 - 1198 cc	72 → 86		VKPC 88200	VKPA 88200
1.3	BA3 - 1293 cc	72 → 86		VKPC 88200	VKPA 88200
1.5	BA3 - 1451 cc	72 → 81		VKPC 88200	VKPA 88200
1.6	BA3 - 1569 cc	72 → 81		VKPC 88200	VKPA 88200

NIVA (2121)

1.6 (2121)	BA3 2121 - 1569 cc	80 →		VKPC 88200	VKPA 88200

www.bergab.ru Берг АБ bergab@ya.ru Тел. (495)-228-06-21, факс (495) 223-3071

www.bergab.ru Берг АБ bergab@ya.ru Тел. (495)-228-06-21, факс (495) 223-3071

1.9 DIESEL	XU9D - 1905 cc	80 →		**VKPC 83424**	
RIVA/TAIGA					
1.6	BA3 - 1569 cc	80 →		**VKPC 88200**	VKPA 88200
SAGONA (2108/9)					
1.3	BA3 2108 - 1288 cc	87 →		**VKPC 88203**	
1.5	BA3 21083 - 1499 cc	87 →		**VKPC 88203**	
SAMARA (2108/9)					
1.1	BA3 21081 - 1099 cc	90 → 02/92		**VKPC 88203**	
1.3	BA3 2108 - 1288 cc	87 → 02/92		**VKPC 88203**	
1.5	BA3 21083 - 1499 cc	87 → 02/92		**VKPC 88203**	
1.5 DIESEL	TUD5 - 1527 cc	03/95 →		**VKPC 83428**	
ZHIGULI VAZ					
1.2	BA3 - 1198 cc	72 →		**VKPC 88200**	VKPA 88200
1.3	BA3 - 1293 cc	72 →		**VKPC 88200**	VKPA 88200
1.5	BA3 - 1451 cc	78 →		**VKPC 88200**	VKPA 88200
1.6	BA3 - 1569 cc	78 →		**VKPC 88200**	VKPA 88200

LANCIA (AUTOBIANCHI)

A 112					
0.9	A 112 A/A5.000 - 903 cc	77 → 86			**VKPA 82202**
1.0	A 112 B1.000 - 965 cc	77 → 86			**VKPA 82202**
1.0	A 112 A1.000 - 982 cc	77 → 86			**VKPA 82202**
1.05	A 112 A2.000 - 1049 cc	77 → 86			**VKPA 82202**
DEDRA					
1.6 (835AA, 835AB)	835A1.000/046 - 1581 cc	10/89 → 94	Ø	**VKPC 82431**	**VKPA 82431**
1.6 (835AA, 835AB)	835A1.000/046 - 1581 cc	10/89 → 94	⊖	**VKPC 82245**	
1.6 (835AM)	835C1.000 - 1581 cc	10/89 → 94	⊖	**VKPC 82245**	
1.6 (835EB)	159B9.000 - 1581 cc	94 → 99		**VKPC 82230**	**VKPA 82230**
1.6 16V (835)	182A4/183A6.000 - 1581 cc	95 → 99		**VKPC 82441**	**VKPA 82441**
1.8 (835AT)	835C5.000 - 1756 cc	10/89 → 99		**VKPC 82647**	
1.8 (835EG, 835FG, 835EH)	182A2.000 - 1756 cc	94 → 99		**VKPC 82645**	
1.8 (835FA)	836A5.000 - 1756 cc	94 → 99		**VKPC 82647**	
1.8 i.e (835AC, 835AD, 835BC, 835BD)	835A2.000 - 1756 cc	10/89 → 94	→|Mot. 1308020	**VKPC 82622**	
1.8 i.e (835AC, 835AD, 835BC, 835BD)	835A2.000 - 1756 cc	10/89 → 94	|→Mot. 1308021	**VKPC 82647**	
1.8 16V (835EH)	183A1.000 - 1756 cc	94 → 99		**VKPC 82645**	
2.0 (835AP)	835A7.000 - 1995 cc	91 → 99		**VKPC 82647**	
2.0 (835AO, 835AR)	835A8.000 - 1995 cc	91 → 99		**VKPC 82647**	
2.0 (835EC)	835A5.046 - 1995 cc	94 → 99		**VKPC 82647**	
2.0 i.e (835AI, 835AL)	835A5.000 - 1995 cc	10/89 → 94	→|Mot. 1308020	**VKPC 82622**	
2.0 i.e (835AI, 835AL)	835A5.000 - 1995 cc	10/89 → 94	|→Mot. 1308021	**VKPC 82647**	
1.9 TURBO DIESEL (835AG)	835A4.000 - 1929 cc	10/89 → 94		**VKPC 82618**	**VKPA 82618**
1.9 TURBO DIESEL (835AS)	160D1.000 - 1929 cc	10/89 → 94		**VKPC 82618**	**VKPA 82618**
1.9 TURBO DIESEL (835EE, 835EF)	835A4/160D1.000 - 1929 cc	94 →			**VKPA 82666**
DELTA					
1.1 (831AB)	831B.000 - 1116 cc	86 → 92		**VKPC 82206**	**VKPA 82222**
1.3	831A/A2.000 - 1301 cc	79 → 82	AC	**VKPC 82206**	**VKPA 82222**

www.bergab.ru Берг АБ bergab@ya.ru Тел. (495)-228-06-21, факс (495) 223-3071

LANCIA (AUTOBIANCHI) .../...

1.3	831A2.000 - 1301 cc	82 → 86		**VKPC 82206**	**VKPA 82222**
1.3 (831AB)	831B.000 - 1301 cc	86 → 92		**VKPC 82206**	**VKPA 82222**
1.4 (836AF)	160A1.000 - 1372 cc	04/95 →		**VKPC 82230**	**VKPA 82230**
1.4 (836AH)	836A4.000 - 1372 cc	93 → 03/95	AC	**VKPC 82245**	
1.4 (836AH)	836A4.000 - 1372 cc	04/95 →		**VKPC 82230**	**VKPA 82230**
1.5	831A1.000 - 1498 cc	79 → 82	AC	**VKPC 82206**	**VKPA 82222**
1.5	831B1.000 - 1498 cc	82 → 86		**VKPC 82206**	**VKPA 82222**
1.5 (831AB)	831B1.000 - 1498 cc	86 → 92	→|CH 0626853	**VKPC 82218**	**VKPA 82218**
1.5 (831AB)	831B1.000 - 1498 cc	86 → 92	|→CH 0626854		**VKPA 82202**
1.6	831A4/831A7 - 1581 cc	82 → 86		**VKPC 82424**	
1.6	831B3/B7 - 1581 cc	86 → 92	→|Mot. 1242367	**VKPC 82424**	
1.6 (836AD)	835C1.000 - 1581 cc	93 → 03/95	AC	**VKPC 82245**	
1.6 (836AD)	835C1.000 - 1581 cc	04/95 →		**VKPC 82230**	**VKPA 82230**
1.6 16V (836AO, 836AP)	182A4/183A6.000 - 1581 cc	93 →		**VKPC 82441**	**VKPA 82441**
1.8 (836AE, 836AG, 836AI, 836AL)	835A5/A6/C2/C4 - 1756 cc	10/89 →		**VKPC 82647**	
1.8 (836AQ, 836AR)	182A2/183A1.000 - 1756 cc	93 →		**VKPC 82645**	
2.0 16V (836AA, 836CA)	836A3.000 - 1995 cc	06/93 →		**VKPC 82660**	
2.0 16V TURBO (836AB)	836A2.000 - 1995 cc	06/93 →		**VKPC 82660**	
2.0 16V TURBO (836AS)	175A4.000 - 1995 cc	06/93 →		**VKPC 82660**	
1.9 TURBO DIESEL	831D1.000 - 1929 cc	86 → 90	→|CH 694404	**VKPC 82626**	VKPA 82626
1.9 TURBO DIESEL (836AM, 836AN)	835A4/160D1.000 - 1929 cc	94 →			**VKPA 82666**

EPSILON

1.2 8V (840AA)	840A3.000 - 1242 cc	95 →			**VKPA 82240**
1.2 8V (840AF)	188A4.000 - 1242 cc	00 →		**VKPC 82250**	
1.2i 16V (840.)	176B9.000 - 1242 cc	97 →		**VKPC 82249**	
1.2i 16V (840AG)	188A5.000 - 1242 cc	00 →		**VKPC 82249**	
1.4 (840AB, 840AC)	840A2/A4.000 - 1370 cc	95 →		**VKPC 82437**	

KAPPA

2.0 20V (838AA, 838AG, 838BG)	838A1/A6.000 - 1998 cc	94 →		**VKPC 82646**	
2.0 16V TURBO (838AB, 838BB, 838XB)	838A4.000 - 1995 cc	94 →		**VKPC 82629**	
COUPE 2.0 16V TURBO (838CB)	838A4.000 - 1995 cc	97 →		**VKPC 82629**	
2.0 20V TURBO (838AM, 838BM)	175A3.000 - 1995 cc	97 →		**VKPC 82646**	
2.4 20V (838AC, 838AI, 838BC)	838A2.000 - 2446 cc	94 →		**VKPC 82646**	
COUPE 2.4 20V (838CC)	838A2.000 - 2446 cc	97 →		**VKPC 82646**	
2.4 TURBO DIESEL (838AE, 838AH)	838A3/A7.000 - 2387 cc	94 →		**VKPC 82665**	
2.4 JTD (838AL, 838BL)	838A8.000 - 2387 cc	98 →		**VKPC 82665**	

LYBRA

1.6 16V (839AX, B39BX)	182A4.000 - 1580 cc	99 →		**VKPC 82441**	
1.8 16V (839AX, B39BX)	839A4.000 - 1750 cc	99 →		**VKPC 82645**	
2.0 20V (839AX, B39BX)	182B7.000 - 1998 cc	99 →		**VKPC 82646**	
1.9 JTD (839AX, B39BX)	AR 32302 - 1910 cc	99 →		**VKPC 82665**	
2.4 JTD (839AX, 839BX)	AR 32501/839A5.000 - 2387 cc	99 →		**VKPC 82665**	

PRISMA

1.3	831 A2.000 - 1301 cc	83 → 86		**VKPC 82206**	**VKPA 82222**
1.3	831 B.000 - 1301 cc	86 → 89		**VKPC 82206**	**VKPA 82222**
1.3	831 B.000 - 1301 cc	86 → 89	Auto.GBX	**VKPC 82218**	**VKPA 82218**
1.5	138 C2.048 - 1498 cc	83 → 86		**VKPC 82206**	**VKPA 82222**
1.5	831 B1.000 - 1498 cc	86 → 89		**VKPC 82218**	**VKPA 82218**
1.6 (831AB)	831 A4/B6/B7.000 - 1585 cc	83 → 86		**VKPC 82424**	
1.9 DIESEL	831 D.000 - 1929 cc	86 → 89	→|CH 694404, AC, ⊘		VKPA 82628
1.9 DIESEL	831 D.000 - 1929 cc	86 → 89	→|CH 694404, ⊘	**VKPC 82626**	VKPA 82626

www.bergab.ru Берг АБ bergab@ya.ru Тел. (495)-228-06-21, факс (495) 223-3071

1.9 TURBO DIESEL	831 D1.000 - 1929 cc	86 → 89	→I, AC	VKPC 82626	VKPA 82626
Y 10					
1.0 (156AA, 156AD, 156AE, 156B)	156A - 999 cc	85 → 92		VKPC 82214	
1.05 (156C, 156D)	156A - 1049 cc	85 → 89		VKPC 82208	
1.1 (156AC, 156AG)	156C - 1108 cc	89 → 95		VKPC 82214	
1.3 (156AB, 156AF)	146A5/156B - 1297 cc	85 → 95		VKPC 82208	
THEMA					
2.0 i.e (834 B)	834 B - 1995 cc	84 → 88	→|Mot. 570151	VKPC 82614	
2.0 i.e (834 B)	834 B - 1995 cc	84 → 88	|→Mot. 570152	VKPC 82622	
2.0 i.e (834AB, 834BV, 834CV)	834 B/B1/C - 1995 cc	88 → 92		VKPC 82622	
2.0 i.e (834 F)	834 B.146 - 1995 cc	92 →		VKPC 82622	
2.0 i.e (834 AA)	834 B2.000 - 1995 cc	88 → 92		VKPC 82629	
2.0 i.e (834 AI)	834 B2.246 - 1995 cc	88 → 92		VKPC 82629	
2.0 i.e 16V (834FA)	834 F1.000 - 1995 cc	92 →		VKPC 82629	
2.0 i.e TURBO (834C, 834F)	834 C.000 - 1995 cc	84 → 88		VKPC 82622	
2.0 i.e 16V TURBO (834AC, 834AL, 834FC, 834GC)	834 C1/F2 - 1995 cc	88 →		VKPC 82629	
2.5 TURBO DIESEL	8144.91 - 2445 cc	84 → 92		VKPC 82616	
2.5 TURBO DIESEL	8144.97 - 2499 cc	88 → 92	→|Mot. 1340163	VKPC 82616	
2.5 TURBO DIESEL (834FE, 834LE)	8144.97Y - 2499 cc	92 →		VKPC 82638	
ZETA					
2.0 16V (220AL)	RFV - 1998 cc	07/94 →		VKPC 83636	
2.0 TURBO (220AD)	RGX - 1998 cc	07/94 →		VKPC 83420	
2.0 TURBO (220CD)	RGX - 1998 cc	07/94 →		VKPC 83425	
2.0 JTD TURBO DIESEL (220AN)	RHZ - 1997 cc	00 →		VKPC 83639	
2.1 TURBO DIESEL (220AJ)	P8C - 2088 cc	07/94 →		VKPC 83425	

LOTUS

ELISE

1.8	18K/184K - 1800 cc	08/95 →		VKPC 87401	

MAZDA

121

1.1 (DA)	B1 - 1138 cc	11/87 → 11/90		VKPC 94002	
1.1 (DB)	B1 - 1139 cc	11/90 → 11/93		VKPC 94002	
1.2 (ZF)	ZH12 - 1242 cc	01/96 →		VKPC 84215	
1.3 (DA)	B3 - 1313/1324 cc	11/87 → 11/90		VKPC 94002	
1.3 (DB)	B3-ME - 1323 cc	11/90 → 01/96		VKPC 94002	
1.3 (DC)	B3-ME - 1323 cc	07/95 → 01/96		VKPC 94002	
1.3 (ZF)	JJA / J4C - 1299 cc	01/96 →		VKPC 84216	
1.8 DIESEL	RTK - 1753 cc	01/96 →		VKPC 84620	
323					
1.3 (BD/BF)	E3 - 1296 cc	80 → 89		VKPC 94202	
1.3 (BG)	B3 - 1323 cc	06/89 →		VKPC 94002	
1.3 (BC)	B3-ME - 1323 cc	06/94 →		VKPC 94002	
1.3 (BE)	B3-ME - 1323 cc	08/95 →		VKPC 94002	
1.5 (BD/BF)	E5 - 1490 cc	80 → 89		VKPC 94202	
1.5 (BW)	B5 - 1480 cc	09/89 →		VKPC 94002	
1.6 (BG/BW)	B6 - 1598 cc	06/89 →	SOHC	VKPC 94002	
1.8 (BG)	BP - 1839 cc	06/89 →	SOHC	VKPC 94002	
1.8 (BG)	BP - 1839 cc	06/89 →	DOHC	VKPC 94434	

www.bergab.ru Берг АБ bergab@ya.ru Тел. (495)-228-06-21, факс (495) 223-3071

www.bergab.ru Берг АБ bergab@ya.ru Тел. (495)-228-06-21, факс (495) 223-3071

MAZDA .../...

2.0 (BC/BE)	KF - 1995 cc	05/94 →		VKPC 94603

323 WAGON

1.5 (BA/BP/BR)	B5 - 1480 cc	06/87 → 06/95		VKPC 94002
1.6 (BA/BC/BP/BR)	B6 - 1598 cc	06/87 →		VKPC 94002

626

1.6 (GC)	F6 - 1587 cc	11/82 → 06/87		VKPC 94423
1.6 (GD)	F6 - 1587 cc	07/87 → 10/91		VKPC 94424
1.8 (GC)	F8 - 1840 cc	09/82 → 06/85		VKPC 94422
1.8 (GD)	F8 - 1840 cc	07/87 → 10/91		VKPC 94424
2.0E (GC)	FE - 1984 cc	07/85 → 06/87		VKPC 94423
2.0 (GC)	FE - 1984 cc	11/82 → 06/87	SOHC	VKPC 94423
2.0 (GD)	FE - 1984 cc	06/87 → 10/91	SOHC	VKPC 94424
2.0 (GD)	FE - 1984 cc	07/87 → 10/91	DOHC	VKPC 94425
2.2 (GD)	F2 - 2169 cc	11/87 → 10/91		VKPC 94424
2.5 (GA/GC/GD/GE)	KL-ZE - 2496 cc	08/91 → 04/94		VKPC 94602
2.5 (GA/GC/GD/GE)	KL-ZE - 2496 cc	05/94 → 97		VKPC 94603
2.0 DIESEL (GC)	RF - 1984 cc	01/83 → 06/87		VKPC 94452

626 WAGON

1.8 (GV)	F8 - 1840 cc	03/88 → 03/92		VKPC 94424
2.0 (GV)	FE - 1984 cc	03/88 →	SOHC	VKPC 94424
2.0 (GV)	FE - 1984 cc	03/88 →	DOHC	VKPC 94425
2.2 (GV)	F2 - 2169 cc	03/88 →		VKPC 94424

929

2.0 (HB)	FE - 1984 cc	09/83 → 02/85		VKPC 94422
2.0 (HB)	FE - 1984 cc	02/85 → 09/86		VKPC 94423
2.0 (HC)	FE - 1984 cc	12/86 → 07/89		VKPC 94424
2.2 (HC)	F2 - 2184 cc	12/86 → 07/89		VKPC 94424
3.0 (HE/HF)	JE3 - 2918 cc	12/86 → 07/89		VKPC 94612

MX-3

1.6 (EA)	B6 - 1598 cc	05/91 → 10/93	OHC	VKPC 94002
1.8 (EA)	K8 - 1844 cc	05/91 → 93	DOHC	VKPC 94602
1.8 (EA)	K8 - 1844 cc	93 → 96	DOHC	VKPC 94603

MX-5

1.6 (NA)	B6 - 1598 cc	09/89 → 09/93	DOHC	VKPC 94434
1.6 (NB)	B6 - 1598 cc	12/94 →	DOHC	VKPC 94434

MX-6

2.5 (GA/GC/GD/GE)	KL-ZE - 2496 cc	93 → 94		VKPC 94602
2.5 (GA/GC/GD/GE)	KL-ZE - 2496 cc	94 →		VKPC 94603

XEDOS 6

2.0 (CA)	KF - 1995 cc	01/92 → 94		VKPC 94602
2.0 (CA)	KF - 1995 cc	94 →		VKPC 94603

XEDOS 9

2.0 (TA/TB)	KF - 1995 cc	07/93 →		VKPC 94603
2.5 (TA/TB)	KL-ZE - 2496 cc	07/93 →		VKPC 94603

www.bergab.ru Берг АБ bergab@ya.ru Тел. (495)-228-06-21, факс (495) 223-3071

www.bergab.ru Берг АБ bergab@ya.ru Тел. (495)-228-06-21, факс (495) 223-3071

MAZDA COMMERCIAL

B SERIES (B1600/B2000/B2200/B2600)

1.6 (UF)	1600 cc	11/89 → 03/96		**VKPC 94423**
2.0 (UF)	2000 cc	11/89 → 03/96		**VKPC 94423**
2.2 (UF)	2200 cc	08/91 →		**VKPC 94424**
2.6	G6 - 2605 cc	87 → 88		**VKPC 95602**
2.2 DIESEL (UF)	2200 cc	11/89 → 03/96		**VKPC 94425**

BONGO

1.8 (SD/SR)	F8 - 1789 cc	02/85 → 09/87		**VKPC 94423**
1.8 (SD/SR)	F8 - 1789 cc	09/87 →		**VKPC 94424**
1.8 (SE)	F8 - 1789 cc	09/85 →		**VKPC 94423**
1.8 (SS88)	F8 - 1789 cc	06/83 → 02/85		VKPC 94422
1.8 (SS88)	F8 - 1789 cc	03/85 → 09/87		**VKPC 94423**
1.8 (SS88)	F8 - 1789 cc	09/87 →		**VKPC 94424**
2.0 (SDE/SRE)	FE - 1998 cc	03/85 → 09/87		**VKPC 94423**
2.0 (SDE/SRE)	FE - 1998 cc	09/87 →		**VKPC 94424**
2.0 (SSE)	FE - 1998 cc	11/86 →		**VKPC 94424**

E SERIES (E2000)

2.0 (SD/SR)	FE-E - 1998 cc	12/87 →		**VKPC 94424**

MERCEDES-BENZ

W107 SERIES

280 SL, SLC (107.022, 042)	110.982 - 2746 cc	74 → 76		**VKPC 88807**
280 SL, SLC 2.7 (107.022, 042)	110.982/986 - 2746 cc	74 → 81		**VKPC 88807**
280 SL 2.7 (107.042)	110.990 - 2746 cc	81 → 89		**VKPC 88807**
300 SL 3.0 (107.041)	103.982 - 2962 cc	85 →	Man.GBX	**VKPC 88810**
300 SL 3.0 (107.041)	103.982 - 2962 cc	85 →	Auto.GBX	**VKPC 88804**
380 SL, SLC 3.8 (107.025, 045)	116.960 - 3776 cc	80 → 85		VKPC 88817
380 SL 3.8 (107.045)	116.962 - 3776 cc	85 →		**VKPC 88818**
500 SL 5.0 (107.046)	117.960 - 4973 cc	→		VKPC 88817
500 SL 5.0 (107.046)	117.962 - 4973 cc	80 → 85		**VKPC 88818**
500 SL 5.0 (107.046)	117.964 - 4973 cc	85 → 89		**VKPC 88827**

W108 SERIES

280 S (108.016)	130.921	→	Man.GBX, |→Mot. 000035	**VKPC 88807**
280 S (108.016)	130.921	→	Auto.GBX, |→Mot. 000006	**VKPC 88807**
280 S (108.016)	130.920	→	Man.GBX, |→Mot. 001042	**VKPC 88807**
280 S (108.016)	130.920	→	Auto.GBX, |→Mot. 001254	**VKPC 88807**
280 SE, SEL (108.018, 019)	130.984	→	Man.GBX, |→Mot. 000100	**VKPC 88807**
280 SE, SEL (108.018, 019)	130.984	→	Auto.GBX, |→Mot. 000047	**VKPC 88807**
280 SE, SEL (108.018, 019)	130.980	→	Man.GBX, |→Mot. 005239	**VKPC 88807**
280 SE, SEL (108.018, 019)	130.980	→	Auto.GBX, |→Mot. 009390	**VKPC 88807**

W110 SERIES

230 2.3 (110.011, 017)	180.945,949,950 - 2281 cc	→		**VKPC 88803**

www.bergab.ru Берг АБ bergab@ya.ru Тел. (495)-228-06-21, факс (495) 223-3071

www.bergab.ru Берг АБ bergab@ya.ru Тел. (495)-228-06-21, факс (495) 223-3071

MERCEDES-BENZ .../...

W111 SERIES

220 B, SB, SEB 2.2 (111.010, 012, 014)	127.982 , 180.940/941 - 2180 cc	→		VKPC 88803
220 SEB 2.2 (111.021, 023)	127.984 - 2180 cc	→		VKPC 88803
230 S 2.3 (111.010)	180.940,947,951 - 2281 cc	→		VKPC 88803
250 SE, C 2.5 (111.021, 023)	127.984 - 2470 cc	66 → 70		VKPC 88803
280 SE, C (111.024, 025)	130.980	→	Man.GBX, I→Mot. 005239	VKPC 88807
280 SE, C (111.024, 025)	130.980	→	Auto.GBX, I→Mot. 009390	VKPC 88807

W113 SERIES

280 SL (113.044)	130.983	→		VKPC 88807

W114 SERIES

230/230.6 2.3 (114.015, 017)	180.954 - 2292 cc	71 → 76	Man.GBX, →I Mot. 007681	VKPC 88803
230/230.6 2.3 (114.015, 017)	180.954 - 2292 cc	71 → 76	Man.GBX, I→Mot. 007682	VKPC 88807
230/230.6 2.3 (114.015, 017)	180.954 - 2292 cc	71 → 76	Auto.GBX, →I Mot. 003563	VKPC 88803
230/230.6 2.3 (114.015, 017)	180.954 - 2292 cc	71 → 76	Auto.GBX, I→Mot. 003564	VKPC 88807
230/230.6 2.3 (114.015, 017)	180.955 - 2292 cc	71 → 76	Man.GBX, →I Mot. 000160	VKPC 88803
230/230.6 2.3 (114.015, 017)	180.955 - 2292 cc	71 → 76	Man.GBX, I→Mot. 000161	VKPC 88807
230/230.6 2.3 (114.015, 017)	180.955 - 2292 cc	71 → 76	Auto.GBX, I→Mot. 000031	VKPC 88807
250 C 2.8 (114.010, 021)	114.920 - 2778 cc	72 → 76	Man.GBX, →I Mot. 008600	VKPC 88803
250 C 2.8 (114.010, 021)	114.920 - 2778 cc	72 → 76	Man.GBX, I→Mot. 008601	VKPC 88807
250 C 2.8 (114.010, 021)	114.920 - 2778 cc	72 → 76	Auto.GBX, →I Mot. 006185	VKPC 88803
250 C 2.8 (114.010, 021)	114.920 - 2778 cc	72 → 76	Auto.GBX, I→Mot. 006186	VKPC 88807
250 C 2.8 (114.010, 021)	114.923 - 2778 cc	72 → 76	Man.GBX, →I Mot. 000237	VKPC 88803
250 C 2.8 (114.010, 021)	114.923 - 2778 cc	72 → 76	Man.GBX, I→Mot. 000238	VKPC 88807
250 C 2.8 (114.010, 021)	114.923 - 2778 cc	72 → 76	Auto.GBX, I→Mot. 000008	VKPC 88807
250 C 2.8 (114.011, 023)	130.923/933 - 2778 cc	72 → 76		VKPC 88807

W115 SERIES

220 2.0 (115.010)	115.920,924 - 1988 cc	71 → 76	Man.GBX, I→Mot. 000067	VKPC 88807
220 2.0 (115.010)	115.920,924 - 1988 cc	71 → 76	Auto.GBX, I→Mot. 000013	VKPC 88807
230/230.4 2.3 (115.017)	115.951 - 2307 cc	73 → 76		VKPC 88807
220 2.0 DIESEL (115.115)	615.913 - 1988 cc	71 → 76		VKPC 88807
220 2.2 DIESEL (115.110, 112)	615.912 - 2197 cc	71 → 76	Man.GBX, →I Mot. 000148	VKPC 88803
220 2.2 DIESEL (115.110, 112)	615.912 - 2197 cc	71 → 76	Man.GBX, I→Mot. 000149	VKPC 88807
240 2.4 DIESEL (115.105, 107, 108, 117, 119)	616.916 - 2376 cc	71 → 76		VKPC 88807
240 3.0 DIESEL (115.114)	617.910 - 3005 cc	72 → 76	Man.GBX, I→Mot. 025170	VKPC 88807

www.bergab.ru Берг АБ bergab@ya.ru Тел. (495)-228-06-21, факс (495) 223-3071

www.bergab.ru Берг АБ bergab@ya.ru Тел. (495)-228-06-21, факс (495) 223-3071

240 3.0 DIESEL (115.114)	617.910 - 3005 cc	72 → 76	Auto.GBX, |→Mot. 023540	VKPC 88807
300 3.0 DIESEL (115.114)	617.910 - 3005 cc	→	Man.GBX, |→Mot. 025170	VKPC 88807
300 3.0 DIESEL (115.114)	617.910 - 3005 cc	→	Auto.GBX, |→Mot. 023540	VKPC 88807
W116 SERIES				
280 S 2.7 (116.020)	110.922/932 - 2746 cc	74 → 80		VKPC 88807
280 SE, SEL 2.7 (116.024, 025)	110.983/985 - 2746 cc	72 → 80		VKPC 88807
W123 SERIES				
200, 200 T 2.0 (123.220, 280)	102.920 - 1997 cc	80 → 84	Man.GBX, →|Mot. 123428	VKPC 88613
200, 200 T 2.0 (123.220, 280)	102.920 - 1997 cc	83 → 85	Man.GBX, |→Mot. 123429	VKPC 88604
200, 200 T 2.0 (123.220, 280)	102.920 - 1997 cc	80 → 84	Auto.GBX, →|Mot. 036023	VKPC 88613
200, 200 T 2.0 (123.220, 280)	102.920 - 1997 cc	83 → 85	Auto.GBX, |→Mot. 036024	VKPC 88604
200, 200 T 2.0 (123.220, 280)	102.939 - 1997 cc	80 → 84	Man.GBX, →|Mot. 012089	VKPC 88613
200, 200 T 2.0 (123.220, 280)	102.939 - 1997 cc	83 → 85	Man.GBX, |→Mot. 012090	VKPC 88604
200, 200 T 2.0 (123.220, 280)	102.939 - 1997 cc	80 → 84	Auto.GBX, →|Mot. 000787	VKPC 88613
200, 200 T 2.0 (123.220, 280)	102.939 - 1997 cc	83 → 85	Auto.GBX, |→Mot. 000788	VKPC 88604
230 C, TE 2.3 (123.023, 043, 083)	115.954 - 2307 cc	77 → 80		VKPC 88807
230 E, CE, TE 2.3 (123.200, 223, 243, 283)	102.980 - 2299 cc	80 → 85	Man.GBX, →|Mot. 130850	VKPC 88613
230 E, CE, TE 2.3 (123.200, 223, 243, 283)	102.980 - 2299 cc	80 → 85	Man.GBX, |→Mot. 130851	VKPC 88604
230 E, CE, TE 2.3 (123.200, 223, 243, 283)	102.980 - 2299 cc	80 → 85	Auto.GBX, →|Mot. 094783	VKPC 88613
230 E, CE, TE 2.3 (123.200, 223, 243, 283)	102.980 - 2299 cc	80 → 85	Auto.GBX, |→Mot. 094784	VKPC 88604
250 2.5 (123.026, 028)	123.920/921 - 2525 cc	76 → 85		VKPC 88813
250 T 2.5 (123.086)	123.920/921 - 2525 cc	76 → 85		VKPC 88813
280 C 2.7 (123.030, 050)	110.923 - 2746 cc	76 → 81		VKPC 88813
280 E, CE, TE 2.7 (123.033, 053, 093)	110.984/988 - 2746 cc	76 → 84		VKPC 88813
200 2.0 DIESEL (123.020)	115.938/939 - 1988 cc	76 → 80		VKPC 88807
200 2.0 DIESEL (123.120)	615.940 - 1988 cc	76 → 85		VKPC 88807
220 2.2 DIESEL (123.126)	615.941 - 2197 cc	76 → 79		VKPC 88807
240 2.4 DIESEL (123.123, 125)	616.912 - 2399 / 2404 cc	76 → 85		VKPC 88807
300 3.0 DIESEL (123.105, 130, 132)	617.912 - 3005 cc	76 → 85		VKPC 88807
240 2.4 TURBO DIESEL (123.183)	616.912 - 2399 / 2404 cc	76 → 85		VKPC 88807
300 3.0 TURBO DIESEL (123.190, 193)	617.912/952 - 3005 cc	76 → 85		VKPC 88807
W124 SERIES				
190 E 3.0 AMG (124.029)	103.983 - 2962 cc	→		VKPC 88810
200, 200 T 2.0 (124.020, 080)	102.922 - 1997 cc	12/85 → 05/90		VKPC 88619
200 2.0 E, CE, TE (124.021, 041, 081)	102.963 - 1997 cc	09/88 → 06/93		VKPC 88619
200 E, CE, TE 2.0 (124.019, 040, 060, 079)	111.940 - 1998 cc	06/93 → 06/95		VKPC 88622
220 E, CE, TE 2.2 (124.022, 042, 062, 082)	111.960 - 2199 cc	06/93 →		VKPC 88622

www.bergab.ru Берг АБ bergab@ya.ru Тел. (495)-228-06-21, факс (495) 223-3071

www.bergab.ru Берг АБ bergab@ya.ru Тел. (495)-228-06-21, факс (495) 223-3071

MERCEDES-BENZ .../...

230 E, CE, TE 2.3 (124.003, 004, 023, 043, 083)	102.982 - 2299 cc	01/85 → 06/93		VKPC 88619
260 E 2.6 (124.026, 027)	103.940 - 2599 cc	09/85 → 08/92		VKPC 88810
260 E 4 MATIC 2.6 (124.226)	103.943 - 2599 cc	87 →		VKPC 88810
280 E, TE 2.8 (124.008, 028, 029, 088)	104.942 - 2799 cc	06/93 → 96	→|Mot. 005789	VKPC 88824
280 E, TE 2.8 (124.008, 028, 029, 088)	104.942 - 2799 cc	06/93 → 96	|→Mot. 005790	VKPC 88836
280 E, TE 2.8 (124.008, 028, 029, 088)	104.942 - 2799 cc	06/93 → 96	→|Mot. 048696	VKPC 88824
280 E, TE 2.8 (124.008, 028, 029, 088)	104.942 - 2799 cc	06/93 → 96	|→Mot. 048697	VKPC 88836
300 E 3.0 (124.030)	103.980 - 2962 cc	09/85 → 08/92		VKPC 88810
300 E, CE, TE 3.0 (124.030, 050, 090)	103.983 - 2962 cc	01/86 → 08/92		VKPC 88810
300 E, TE, E 300 4 MATIC 3.0 (124.230, 290)	103.985 - 2962 cc	87 →		VKPC 88810
300 E, CE, TE 3.0 24V (124.031, 051, 061, 091) KAT.	104.980 - 2962 cc	09/88 → 08/92		VKPC 88816
300 E, CE, TE 3.0 24V (124.031, 051, 061, 091)	104.980 - 2962 cc	09/88 → 08/92		VKPC 88825
320 E, CE, TE 3.2 (124.032, 052, 066, 092)	104.992 - 3199 cc	06/93 → 96	→|Mot. 004356	VKPC 88824
320 E, CE, TE 3.2 (124.032, 052, 066, 092)	104.992 - 3199 cc	06/93 → 96	→|Mot. 072236	VKPC 88824
320 E, CE, TE 3.2 (124.032, 052, 066, 092)	104.992 - 3199 cc	06/93 → 96	|→Mot. 004357	VKPC 88836
320 E, CE, TE 3.2 (124.032, 052, 066, 092)	104.992 - 3199 cc	06/93 → 96	|→Mot. 072237	VKPC 88836
400 E 4.2 (124.034)	119.975 - 4196 cc	02/93 →	→|Mot. 020770	VKPC 88820
400 E 4.2 (124.034)	119.975 - 4196 cc	02/93 →	|→Mot. 020771	VKPC 88835
500 E 5.0 (124.036)	119.974 - 4973 cc	01/91 →	→|Mot. 010204	VKPC 88820
500 E 5.0 (124.036)	119.974 - 4973 cc	01/91 →	|→Mot. 010205	VKPC 88835
200 2.0 DIESEL / TURBO DIESEL (124.120, 180)	601.912 - 1997 cc	12/84 → 06/93	Man.GBX, →|Mot. 195582	VKPC 88608
200 2.0 DIESEL / TURBO DIESEL (124.120, 180)	601.912 - 1997 cc	12/84 → 06/93	Man.GBX, |→Mot. 195583	VKPC 88620
200 2.0 DIESEL / TURBO DIESEL (124.120, 180)	601.912 - 1997 cc	12/84 → 06/93	Auto.GBX, →|Mot. 019805	VKPC 88608
200 2.0 DIESEL / TURBO DIESEL (124.120, 180)	601.912 - 1997 cc	12/84 → 06/93	Auto.GBX, |→Mot. 019806	VKPC 88620
250 2.5 DIESEL / TURBO DIESEL (124.105, 116, 125, 127, 185)	602.912 - 2497 cc	04/85 → 06/93		VKPC 88620
250 2.5 DIESEL / TURBO DIESEL (124.128, 188)	602.962 - 2497 cc	09/88 → 96	Man.GBX, →|Mot. 033729	VKPC 88620
250 2.5 DIESEL / TURBO DIESEL (124.128, 188)	602.962 - 2497 cc	09/88 → 96	Man.GBX, |→Mot. 033730	VKPC 88842
250 2.5 DIESEL / TURBO DIESEL (124.128, 188)	602.962 - 2497 cc	09/88 → 96	Auto.GBX, →|Mot. 020852	VKPC 88620
250 2.5 DIESEL / TURBO DIESEL (124.128, 188)	602.962 - 2497 cc	09/88 → 96	Auto.GBX, |→Mot. 020853	VKPC 88842
300 3.0 DIESEL (124.130, 190)	603.912 - 2996 cc	12/84 → 06/93		VKPC 88620
300 3.0 DIESEL 4 MATIC (124.330)	603.913 - 2996 cc	88 → 96		VKPC 88620
300 3.0 TURBO DIESEL (124.190)	603.912 - 2996 cc	09/86 → 06/93		VKPC 88620
300 3.0 DIESEL / TURBO DIESEL (124.133, 193)	603.960 - 2996 cc	88 → 96		VKPC 88620

www.bergab.ru Берг АБ bergab@ya.ru Тел. (495)-228-06-21, факс (495) 223-3071

www.bergab.ru Берг АБ bergab@ya.ru Тел. (495)-228-06-21, факс (495) 223-3071

300 3.0 DIESEL / TURBO DIESEL 4 MATIC (124.333, 393)	603.963 - 2996 cc	09/86 → 06/93		**VKPC 88620**
C 250 2.5 TURBO DIESEL (124.128, 188)	605.960 - 2497 cc	97 →		**VKPC 88842**
E 200 2.0 (124.019, 040, 060, 079)	111.940 - 1998 cc	06/93 → 06/95		**VKPC 88622**
E 220 2.2 (124.022, 042, 062, 082)	111.960 - 2199 cc	06/93 →		**VKPC 88622**
E 280 2.8 (124.008, 028, 029, 088)	104.942 - 2799 cc	06/93 → 96	→|Mot. 005789	**VKPC 88824**
E 280 2.8 (124.008, 028, 029, 088)	104.942 - 2799 cc	06/93 → 96	|→Mot. 005790	**VKPC 88836**
E 280 2.8 (124.008, 028, 029, 088)	104.942 - 2799 cc	06/93 → 96	→|Mot. 048696	**VKPC 88824**
E 280 2.8 (124.008, 028, 029, 088)	104.942 - 2799 cc	06/93 → 96	|→Mot. 048697	**VKPC 88836**
E 320 3.2 (124.032, 052, 066, 092)	104.992 - 3199 cc	06/93 → 96	→|Mot. 004356	**VKPC 88824**
E 320 3.2 (124.032, 052, 066, 092)	104.992 - 3199 cc	06/93 → 96	→|Mot. 072236	**VKPC 88824**
E 320 3.2 (124.032, 052, 066, 092)	104.992 - 3199 cc	06/93 → 96	|→Mot. 004357	**VKPC 88836**
E 320 3.2 (124.032, 052, 066, 092)	104.992 - 3199 cc	06/93 → 96	|→Mot. 072237	**VKPC 88836**
E 420 4.2 (124.034)	119.975 - 4196 cc	02/93 →	→|Mot. 020770	VKPC 88820
E 420 4.2 (124.034)	119.975 - 4196 cc	02/93 →	|→Mot. 020771	**VKPC 88835**
E 500 5.0 (124.036)	119.974 - 4973 cc	01/91 →	→|Mot. 010204	VKPC 88820
E 500 5.0 (124.036)	119.974 - 4973 cc	01/91 →	|→Mot. 010205	**VKPC 88835**
E 200 2.0 DIESEL (124.120, 180)	601.912 - 1997 cc	12/84 → 06/93	Man.GBX, →|Mot. 195582	**VKPC 88608**
E 200 2.0 DIESEL (124.120, 180)	601.912 - 1997 cc	12/84 → 06/93	Man.GBX, |→Mot. 195583	**VKPC 88620**
E 200 2.0 DIESEL (124.120, 180)	601.912 - 1997 cc	12/84 → 06/93	Auto.GBX, →|Mot. 019805	**VKPC 88608**
E 200 2.0 DIESEL (124.120, 180)	601.912 - 1997 cc	12/84 → 06/93	Auto.GBX, |→Mot. 019806	**VKPC 88620**
E 250 2.5 DIESEL (124.104, 107, 126, 129, 186)	605.911 - 2497 cc	07/93 → 06/95		**VKPC 88620**
E 300 3.0 DIESEL (124.131, 191)	606.910 - 2996 cc	06/93 → 06/95		**VKPC 88620**
E 300 3.0 DIESEL / TURBO DIESEL (124.133, 193)	603.960 - 2996 cc	06/93 → 06/95	→|Mot. 054622	**VKPC 88620**
E 300 3.0 DIESEL / TURBO DIESEL (124.133, 193)	603.960 - 2996 cc	09/88 → 96	|→Mot. 054623	**VKPC 88842**
E 300 3.0 TURBO DIESEL (124.333, 393)	603.963 - 2996 cc	88 → 96		**VKPC 88620**

W126 SERIES

260 SE 2.6 (126.020)	103.941 - 2599 cc	09/85 → 06/91		**VKPC 88810**
280 S 2.7 (126.021)	110.924/926 - 2746 cc	80 → 85		**VKPC 88813**
280 SE, SEL 2.7 (126.022, 023)	110.987/989 - 2746 cc	80 → 85		**VKPC 88813**
300 SE, SEL 3.0 (126.024, 025)	103.981 - 2962 cc	09/85 → 06/91	Man.GBX	**VKPC 88810**
300 SE, SEL 3.0 (126.024, 025)	103.981 - 2962 cc	09/85 → 06/91	Auto.GBX	**VKPC 88804**
380 SE, SEL 3.8 (126.032, 033)	116.961 - 3776 cc	80 → 85		VKPC 88817
380 SE, SEL, SEC 3.8 (126.032, 033, 043)	116.963 - 3776 cc	85 →		**VKPC 88818**
420 SE, SEL, SEC 4.2 (126.034, 035, 046)	116.965 - 4196 cc	10/85 → 06/91		**VKPC 88827**
500 SE, SEL, SEC 5.0 (126.036, 037, 044)	117.963 - 4973 cc	80 → 85		**VKPC 88818**
500 SE, SEL, SEC 5.0 (126.036, 037)	117.965 - 4973 cc	09/85 → 06/91		**VKPC 88827**
560 SE, SEL, SEC 5.5 (126.038, 045)	117.965/968 - 5547 cc	09/85 → 06/91		**VKPC 88827**

W129 SERIES

300 SL 3.0 (129.060)	103.984 - 2962 cc	03/89 → 08/93		**VKPC 88810**
300 SL 3.0 24V (129.061)	104.981 - 2960 cc	03/89 → 07/93		**VKPC 88816**
320 SL 3.2 (129.063)	104.991 - 3199 cc	03/93 →	→|Mot. 009985	**VKPC 88824**
320 SL 3.2 (129.063)	104.991 - 3199 cc	03/93 →	|→Mot. 009986	**VKPC 88836**
500 SL 5.0 (129.026, 066)	119.960 - 4973 cc	03/89 → 08/92		VKPC 88820
500 SL 5.0 (129.067)	119.972 - 4973 cc	03/89 → 08/92	→|Mot. 013777	VKPC 88820
500 SL 5.0 (129.067)	119.972 - 4973 cc	03/89 → 08/92	|→Mot. 013778	**VKPC 88835**
SL 280 2.8 (129.058)	104.943 - 2799 cc	08/93 →	→|Mot. 000900	**VKPC 88824**
SL 280 2.8 (129.058)	104.943 - 2799 cc	08/93 →	→|Mot. 003620	**VKPC 88824**
SL 320 3.2 (129.063)	104.991 - 3199 cc	03/93 →	→|Mot. 009985	**VKPC 88824**

www.bergab.ru Берг АБ bergab@ya.ru Тел. (495)-228-06-21, факс (495) 223-3071

MERCEDES-BENZ .../...

SL 320 3.2 (129.063)	104.991 - 3199 cc	03/93 →	|→Mot. 009986	**VKPC 88836**
SL 500 5.0 (129.067)	119.972 - 4973 cc	03/89 → 08/92	→|Mot. 013777	VKPC 88820
SL 500 5.0 (129.067)	119.972 - 4973 cc	03/89 → 08/92	|→Mot. 013778	**VKPC 88835**
SL 500 5.0 (129.067)	119.982 - 4973 cc	09/92 →		**VKPC 88835**
SL 500 5.0 (129.068)	113.961 - 4973 cc	97 →	USA	VKPC 88847
SL 500 5.0 (129.068)	113.961 - 4973 cc	97 →		**VKPC 88846**

W140 SERIES

280 S 2.8 (140.028)	104.944 - 2799 cc	02/93 →	Auto.GBX, |→Mot. 000509	**VKPC 88828**
280 S 2.8 (140.028)	104.944 - 2799 cc	02/93 →	Auto.GBX, |→Mot. 004535	**VKPC 88828**
300 SE 2.8 (140.028)	104.944 - 2799 cc	02/93 →	Man.GBX, →|Mot. 000508	**VKPC 88821**
300 SE 2.8 (140.028)	104.944 - 2799 cc	02/93 →	Auto.GBX, |→Mot. 000509	**VKPC 88828**
300 SE 2.8 (140.028)	104.944 - 2799 cc	02/93 →	Man.GBX, →|Mot. 004534	**VKPC 88821**
300 SE 2.8 (140.028)	104.944 - 2799 cc	02/93 →	Auto.GBX, |→Mot. 004535	**VKPC 88828**
300 SE 2.8 (140.028)	104.944 - 2799 cc	02/93 →	Auto.GBX, →|Mot. 007447	**VKPC 88828**
300 SE, SEL 3.2 (140.032, 033)	104.990 - 3199 cc	03/91 →		**VKPC 88821**
320 S, SE, SEL 3.2 (140.032, 033)	104.990 - 3199 cc	03/91 →	Man.GBX, →|Mot. 000259	**VKPC 88821**
320 S, SE, SEL 3.2 (140.032, 033)	104.990 - 3199 cc	03/91 →	Man.GBX, |→Mot. 000260	**VKPC 88828**
320 S, SE, SEL 3.2 (140.032, 033)	104.994 - 3199 cc	91 → 93	Auto.GBX, →|Mot. 017742	**VKPC 88821**
320 S, SE, SEL 3.2 (140.032, 033)	104.994 - 3199 cc	91 → 93	Auto.GBX, |→Mot. 01743, →|Mot. 031210	**VKPC 88828**
400 SE, SEL 4.2 (140.)	119.971 - 4196 cc	02/91 →	→|Mot. 026750	VKPC 88820
400 SE, SEL 4.2 (140.)	119.971 - 4196 cc	02/91 →	|→Mot. 026751	**VKPC 88835**
500 SE, SEC, SEL 5.0 (140.050, 051, 070)	119.970 - 4973 cc	02/91 →	→|Mot. 056885	VKPC 88820
500 SE, SEC, SEL 5.0 (140.050, 051, 070)	119.970 - 4973 cc	02/91 →	|→Mot. 056886	**VKPC 88835**
300 SD 3.5 TURBO DIESEL (140.134)	603.971 - 3449 cc	01/93 →	→|Mot. 018738	**VKPC 88620**
300 SD 3.5 TURBO DIESEL (140.134)	603.971 - 3449 cc	01/93 →	|→Mot. 018739	**VKPC 88842**
300 S 3.0 TURBO DIESEL (140.135)	606.961 - 2996 cc	95 → 96		**VKPC 88842**
350 S 3.5 TURBO DIESEL (140.134)	603.971 - 3449 cc	01/93 →	→|Mot. 018738	**VKPC 88620**
350 S 3.5 TURBO DIESEL (140.134)	603.971 - 3449 cc	01/93 →	|→Mot. 018739	**VKPC 88842**
S 280 2.8 (140.028)	104.944 - 2799 cc	02/93 →	Man.GBX, →|Mot. 000508	**VKPC 88821**
S 280 2.8 (140.028)	104.944 - 2799 cc	02/93 →	Man.GBX, →|Mot. 004534	**VKPC 88821**
S 280 2.8 (140.028)	104.944 - 2799 cc	02/93 →	Auto.GBX, →|Mot. 007447	**VKPC 88828**
S 320 3.2 (140.032, 033)	104.994 - 3199 cc	03/93 →	→|Mot. 020623	**VKPC 88821**
S 320 3.2 (140.032, 033)	104.994 - 3199 cc	03/93 →	|→Mot. 020624	**VKPC 88828**
S 420 4.2 (140.)	119.971 - 4196 cc	02/91 →	→|Mot. 026750	VKPC 88820
S 420 4.2 (140.)	119.971 - 4196 cc	02/91 →	|→Mot. 026751	**VKPC 88835**
S 420 4.2 (140.042, 043, 063)	119.981 - 4196 cc	07/92 →		**VKPC 88836**

W163 SERIES

ML 230 2.3 (163)	111.977 - 2295 cc	04/98 →		**VKPC 88622**
ML E23 2.3 (163.138)	111.975 - 2295 cc	10/97 →		**VKPC 88631**

www.bergab.ru Берг АБ bergab@ya.ru Тел. (495)-228-06-21, факс (495) 223-3071

ML 430 4.3 (163.172)	113.942 - 4266 cc	98 →	USA	VKPC 88847
ML 430 4.3 (163.172)	113.942 - 4266 cc	98 →		**VKPC 88846**

W168 SERIES

A140 1.4 (168.031)	166.940 - 1397 cc	07/97 →	→|Mot. 63274	**VKPC 88206**
A140 1.4 (168.031)	166.940 - 1397 cc	07/97 →	|→Mot. 63275	**VKPC 88206**
A160 1.6 (168.033)	166.960 - 1598 cc	07/97 →		**VKPC 88206**
A190 1.9 (168)	166.990 - 1897 cc	07/98 →	→|Mot. 63274	**VKPC 88206**
A170 1.7 16V Cdi TURBO DIESEL (168.008)	668.940 - 1689 cc	07/98 →		**VKPC 88206**

W170 SERIES

SL 200 2.0 (170.435)	111.946 - 1998 cc	06/96 →		**VKPC 88622**
SL200 2.0 (170.435)	111.956 - 1998 cc	96 →		**VKPC 88622**
SL200 2.0 Kompressor (170.445)	111.943 - 1998 cc	10/96 →		**VKPC 88631**
SLK 230 2.3i Kompressor (170.)	111.975 - 2295 cc	96 →		**VKPC 88836**
SL230 2.3 Kompressor (170.447)	111.973 - 2295 cc	09/96 →		**VKPC 88631**

W190 SERIES

300 SEL (190.016)	130.980	→	|→Mot. 005239	**VKPC 88807**

W201 SERIES

190 E 1.8 (201.018)	102.910/919 - 1797 cc	04/90 → 08/93		**VKPC 88619**
190 2.0 (201.022)	102.921/938 - 1997 cc	10/82 → 10/84		**VKPC 88604**
190 2.0 (201.023)	102.924 - 1997 cc	09/84 → 08/93		**VKPC 88619**
190 E 2.0 (201.024)	102.961 - 1997 cc	10/82 → 06/93		**VKPC 88604**
190 E 2.0 (201.024)	102.962 - 1997 cc	09/84 → 08/93		**VKPC 88619**
190 E 2.3 (201.028)	102.985 - 2299 cc	09/86 → 08/93		**VKPC 88619**
190 E 2.3 16V (201.034)	102.983 - 2299 cc	04/84 → 08/88		**VKPC 88619**
190 E 2.5 16V (201.035)	102.990 - 2498 cc	09/88 → 08/93		**VKPC 88619**
190 E 2.6 (201.029)	103.942 - 2599 cc	09/86 → 08/93	Man.GBX	**VKPC 88810**
190 E 2.6 (201.029)	103.942 - 2599 cc	09/86 → 08/93	Auto.GBX	**VKPC 88804**
190 2.0 DIESEL (201.122)	601.911 - 1997 cc	08/83 → 08/93		**VKPC 88608**
190 2.5 DIESEL (201.126)	602.911 - 2497 cc	04/85 → 08/93		**VKPC 88620**
190 2.5 TURBO DIESEL (201.128)	602.961 - 2497 cc	04/85 → 08/93		**VKPC 88620**

W202 SERIES

C 180 1.8 (202.018, 078)	111.920 - 1799 cc	03/93 →		**VKPC 88622**
C 180 T 1.8 (202.018, 078)	111.920 - 1799 cc	03/93 →		**VKPC 88622**
C 200 2.0 (202.020, 080)	111.941 - 1998 cc	01/94 →		**VKPC 88622**
C 200 T 2.0 (202.020, 080)	111.941 - 1998 cc	01/94 →		**VKPC 88622**
C 200 2.0 Kompressor (202.025, 082)	111.944 - 1998 cc	10/95 →		**VKPC 88631**
C 200 2.0 (202.020, 080)	111.945 - 1998 cc	06/96 →		**VKPC 88622**
C 200 T 2.0 (202.020, 080)	111.945 - 1998 cc	06/96 →		**VKPC 88622**
C 220 2.2 (202.022)	111.961 - 2199 cc	03/93 →		**VKPC 88622**
C 230 2.3 (202.023, 083)	111.974 - 2299 cc	06/96 →		**VKPC 88622**
C 230 2.3 Kompressor (202.024, 085)	111.975 - 2295 cc	10/95 →		**VKPC 88631**
C 240 2.4 (202.026, 086)	112.910 - 2399 cc	06/95 →	USA	VKPC 88847
C 240 2.4 (202.026, 086)	112.910 - 2399 cc	06/95 →		**VKPC 88846**
C 280 2.8 C36 AMG (202.028)	104.941 - 2799 cc	05/93 →	→|Mot. 004058	**VKPC 88824**
C 280 2.8 C36 AMG (202.028)	104.941 - 2799 cc	05/93 →	|→Mot. 004059	**VKPC 88836**
C 280 2.8 C36 AMG (202.028)	104.941 - 2799 cc	05/93 →	→|Mot. 034965	**VKPC 88824**
C 280 2.8 C36 AMG (202.028)	104.941 - 2799 cc	05/93 →	|→Mot. 0034966	**VKPC 88836**
C 200 2.0 DIESEL (202.120)	601.913 - 1997 cc	03/93 →		**VKPC 88625**
C 200 2.0 DIESEL (202.122)	604.915 - 1997 cc	93 →		**VKPC 88625**
C 220 2.2 DIESEL (202.121, 182)	604.910 - 2155 cc	08/93 →		**VKPC 88625**
C 220 T 2.2 DIESEL (202.121, 182)	604.910 - 2155 cc	08/93 →		**VKPC 88625**
C 250 2.5 DIESEL (202.125)	605.910 - 2497 cc	05/93 →		**VKPC 88620**
C 280 2.8 (202.029, 089)	112.920 - 2799 cc	06/95 →	USA	VKPC 88847

www.bergab.ru Берг АБ bergab@ya.ru Тел. (495)-228-06-21, факс (495) 223-3071

MERCEDES-BENZ .../...

C 280 2.8 (202.029, 089)	112.920 - 2799 cc	06/95 →		**VKPC 88846**
E 230 T 2.3 (202.023, 083)	111.974 - 2299 cc	06/96 →		**VKPC 88622**
C 430 4.3 (202.033, 093)	113.944 - 4266 cc	98 →	USA	VKPC 88847
C 430 4.3 (202.033, 093)	113.944 - 4266 cc	98 →		**VKPC 88846**

W203 SERIES

C200 2.1 CDI (203.004, 204, 704)	611.962 - 2148 cc	09/00 →		**VKPC 88843**
C220 2.1 CDI (203.006, 206, 706)	611.962 - 2148 cc	05/00 →		**VKPC 88843**
C270 2.7 CDI (203.016, 216)	612.962 - 2685 cc	12/00 →		**VKPC 88843**

W208 SERIES

C 200 T 2.0 Kompressor (208.345)	111.944 - 1998 cc	10/95 →		**VKPC 88631**
CLK 200 2.0 Kompressor (208.345)	111.944 - 1998 cc	10/95 →		**VKPC 88631**
CLK 200 2.0 (208.335)	111.945 - 1998 cc	10/95 →		**VKPC 88622**
CLK 230 2.3 Kompressor (208.347)	111.975 - 2295 cc	10/96 →		**VKPC 88631**
CLK 320 3.2 (208.365, 465)	112.940 - 3199 cc	97 →	USA	VKPC 88847
CLK 320 3.2 (208.365, 465)	112.940 - 3199 cc	97 →		**VKPC 88846**
C 430 4.3 (202.033, 093)	113.944 - 4266 cc	98 →	USA	VKPC 88847
C 430 4.3 (202.033, 093)	113.944 - 4266 cc	98 →		**VKPC 88846**
CLK 430 4.3 (208.370, 470)	113.943 - 4266 cc	98 →	USA	VKPC 88847
CLK 430 4.3 (208.370, 470)	113.943 - 4266 cc	98 →		**VKPC 88846**

W210 SERIES

E 200 2.0 (210.035, 235)	111.942 - 1998 cc	03/93 →		**VKPC 88622**
E 200 T 2.0 (210.035, 235)	111.942 - 1998 cc	03/93 →		**VKPC 88622**
E 200 2.0 Kompressor (210.045, 245)	111.947 - 1998 cc	06/96 →		**VKPC 88631**
E 200 T 2.0 Kompressor (210.045, 245)	111.947 - 1998 cc	06/96 →		**VKPC 88631**
E 230 2.3 (210.037, 237)	111.970 - 2299 cc	06/95 →		**VKPC 88622**
E 230 T 2.3 (210.037, 237)	111.970 - 2299 cc	06/95 →		**VKPC 88622**
E 240 2.4 (210.061, 261)	112.911 - 2399 cc	06/95 →	USA	VKPC 88847
E 240 2.4 (210.061, 261)	112.911 - 2399 cc	06/95 →		**VKPC 88846**
E 280 2.8 (210.063, 081, 281, 663)	112.921 - 2799 cc	06/95 →	USA	VKPC 88847
E 280 2.8 (210.063, 081, 281, 663)	112.921 - 2799 cc	06/95 →		**VKPC 88846**
E 320 3.2 (210.065, 082, 265, 282)	112.941 - 3199 cc	06/95 →	USA	VKPC 88847
E 320 3.2 (210.065, 082, 265, 282)	112.941 - 3199 cc	06/95 →		**VKPC 88846**
E 420 4.2 (210.072, 272)	119.985 - 4196 cc	07/92 →		**VKPC 88835**
E 420 T 4.2 (210.072, 272)	119.985 - 4196 cc	07/92 →		**VKPC 88835**
E 430 4.3 (210.070, 270)	113.940 - 4266 cc	97 →	USA	VKPC 88847
E 430 4.3 (210.070, 270)	113.940 - 4266 cc	97 →		**VKPC 88846**
E 200 2.0 DIESEL (210.003)	604.917 - 1997 cc	93 →		**VKPC 88625**
E 220 2.2 DIESEL (210.004)	604.912 - 2155 cc	93 →		**VKPC 88625**
E 250 2.5 DIESEL (210.010, 210, 610)	605.912 - 2497 cc	95 →		**VKPC 88620**
E 300 3.0 DIESEL (210.020)	606.912 - 2996 cc	93 →		**VKPC 88620**
E 250 2.5 TURBO DIESEL (210.010 , 210, 610)	605.912 - 2497 cc	95 →		**VKPC 88620**
E 250 2.5 TURBO DIESEL (210.015 , 215)	605.962 - 2497 cc	97 →		**VKPC 88842**
E 300 3.0 TURBO DIESEL (210.025 , 225)	606.962 - 2996 cc	98 →		**VKPC 88842**
E 550 5.5 (210.074, 274)	113.980 - 5500 cc	98 →	USA	VKPC 88847
E 550 5.5 (210.074, 274)	113.980 - 5500 cc	98 →		**VKPC 88846**

W460 G SERIES

230 GE 2.3 (460.210, 220, 221, 230, 231)	115.973 - 2307 cc	79 →		**VKPC 88807**
230 GE 2.3 (460.221, 231)	115.974 - 2307 cc	79 →		**VKPC 88807**

www.bergab.ru Берг АБ bergab@ya.ru Тел. (495)-228-06-21, факс (495) 223-3071

230 GE 4x4 2.3 (460.218, 228, 229, 238, 239, 249)	102.981/998 - 2307 cc	→		VKPC 88613
240 GD 4x4 2.4 (460.)	616.936 - 2399 cc	79 →	→|Mot. 005397	VKPC 88807
240 GD 4x4 2.4 (460.)	616.938 - 2399 cc	79 →	→|Mot. 000240	VKPC 88807
280 GE 2.7 (460.212, 223, 232, 233)	110.994 - 2746 cc	→		VKPC 88807
300 DG 3.0 (460.)	617.931 - 2998 cc	82 →	Man.GBX, →|Mot. 011424	VKPC 88807
300 DG 3.0 (460.)	617.931 - 2998 cc	82 →	Man.GBX, |→Mot. 011424	VKPC 88809
300 DG 3.0 (460.)	617.931 - 2998 cc	82 →	Auto.GBX, →|Mot. 001229	VKPC 88807
300 DG 3.0 (460.)	617.931 - 2998 cc	82 →	Auto.GBX, |→Mot. 001230	VKPC 88809
300 DG 3.0 (460.)	617.932 - 2998 cc	82 →	Man.GBX, →|Mot. 000090	VKPC 88807
300 DG 3.0 (460.)	617.932 - 2998 cc	82 →	Man.GBX, |→Mot. 000091	VKPC 88809
300 DG 3.0 (460.)	617.932 - 2998 cc	82 →	Auto.GBX	VKPC 88809
250 GD 2.5 DIESEL (460.317, 328, 329, 337, 338)	602.930 - 2497 cc	85 → 90		VKPC 88620

W461 G SERIES

230 GE 2.3 (461.210, 211)	115.974 - 2307 cc	79 →		VKPC 88807
240 GD 4x4 2.4 (461.)	616.938 - 2399 cc	79 →	→|Mot. 000240	VKPC 88807
300 DG 3.0 (461.)	617.931 - 2998 cc	82 →	Man.GBX, →|Mot. 011424	VKPC 88807
300 DG 3.0 (461.)	617.931 - 2998 cc	82 →	Man.GBX, |→Mot. 011424	VKPC 88809
300 DG 3.0 (461.)	617.931 - 2998 cc	82 →	Auto.GBX, →|Mot. 001229	VKPC 88807
300 DG 3.0 (461.)	617.931 - 2998 cc	82 →	Auto.GBX, |→Mot. 001230	VKPC 88809
300 DG 3.0 (461.)	617.932 - 2998 cc	82 →	Man.GBX, →|Mot. 000090	VKPC 88807
300 DG 3.0 (461.)	617.932 - 2998 cc	82 →	Man.GBX, |→Mot. 000091	VKPC 88809
300 DG 3.0 (461.)	617.932 - 2998 cc	82 →	Auto.GBX	VKPC 88809
250 GD 2.5 DIESEL (461.401, 402, 405)	602.939 - 2497 cc	90 →		VKPC 88620
250 GD 2.5 DIESEL (461.450, 452, 456, 458, 459)	602.938 - 2497 cc	90 →		VKPC 88620
250 GD 2.5 DIESEL (461.403, 450, 452, 456, 458, 459)	602.946 - 2960 cc	92 →		VKPC 88620
290 3.0 DIESEL (461.329, 338, 341, 357)	602.942 - 2960 cc	92 →		VKPC 88620
290 3.0 DIESEL (461.450, 452, 456, 458, 459)	602.946 - 2960 cc	92 →		VKPC 88620
290 3.0 DIESEL (461.338, 367, 368)	602.947 - 2960 cc	92 →		VKPC 88620
290 GD 3.0 DIESEL (461.323, 324, 328, 329, 337, 338, 341, 367, 368)	602.942 - 2960 cc	92 →		VKPC 88620
290 GD 3.0 DIESEL (461.338, 367, 368, 404)	602.947 - 2960 cc	92 →		VKPC 88620

W463 G SERIES

300 GE 3.0 (463.207, 227, 228)	103.987 - 2960 cc	89 →		VKPC 88810
320 G 3.2 (463.208, 230, 231)	104.996 - 3199 cc	95 →		VKPC 88828
500 GE 4x4 5.0 (463.228)	117.965 - 4973 cc	93 →		VKPC 88827
500 GE AMG 5.0 (463.228)	119.965 - 4973 cc	86 → 91		VKPC 88817
250 GD 2.5 DIESEL (463.304, 324, 325)	602.931 - 2497 cc	89 →		VKPC 88620
300 GD 3.0 DIESEL (463.307, 327, 328)	603.931 - 2998 cc	89 →		VKPC 88620
300 G 3.0 TURBO DIESEL (463.308, 330, 331)	606.964 - 2998 cc	97 →		VKPC 88842
G 320 3.2 (463.232, 233)	112.945 - 3199 cc	98 →	USA	VKPC 88847
G 320 3.2 (463.232, 233)	112.945 - 3199 cc	98 →		VKPC 88846

www.bergab.ru Берг АБ bergab@ya.ru Тел. (495)-228-06-21, факс (495) 223-3071

www.bergab.ru Берг АБ bergab@ya.ru Тел. (495)-228-06-21, факс (495) 223-3071

MERCEDES-BENZ .../...

350 GD 3.5 4x4 TURBO DIESEL (4 63.300, 320, 321)	603.972 - 3449 cc	93 →	→|Mot. 004348	**VKPC 88620**
350 GD 3.5 4x4 TURBO DIESEL (4 63.300, 320, 321)	603.972 - 3449 cc	93 →	|→Mot. 004349	**VKPC 88842**
G 500 5.0 (463.206, 240, 241)	113.962 - 4973 cc	98 →	USA	VKPC 88847
G 500 5.0 (463.206, 240, 241)	113.962 - 4973 cc	98 →		**VKPC 88846**

W638 SERIES

200 E 2.0 (638.014, 114, 214)	111.948 - 1998 cc	96 →	Man.GBX, →|Mot. 002353	**VKPC 88844**
200 E 2.0 (638.014, 114, 214)	111.948 - 1998 cc	96 →	Man.GBX, |→Mot. 002354	**VKPC 88845**
200 E 2.0 (638.014, 114, 214)	111.948 - 1998 cc	96 →	Auto.GBX, →|Mot. 000132	**VKPC 88844**
200 E 2.0 (638.014, 114, 214)	111.948 - 1998 cc	96 →	Auto.GBX, |→Mot. 000133	**VKPC 88845**
230 E 2.3 (638.234)	111.948 - 2299 cc	96 →	Man.GBX, →|Mot. 001594	**VKPC 88844**
230 E 2.3 (638.234)	111.948 - 2299 cc	96 →	Man.GBX, |→Mot. 001595	**VKPC 88845**
230 E 2.3 (638.234)	111.948 - 2299 cc	96 →	Auto.GBX, →|Mot. 000128	**VKPC 88844**
230 E 2.3 (638.234)	111.948 - 2299 cc	96 →	Auto.GBX, |→Mot. 000129	**VKPC 88845**

MERCEDES-BENZ COMMERCIAL

W309 SERIES

O 309 B (309.)	102.943	→		**VKPC 88613**
L/LK 408 G (309.)	102.943	→		**VKPC 88613**
L/LK 409 (309.)	102.943	→		**VKPC 88613**
L/LK 410 (309.)	102.943	→		**VKPC 88613**
309 2.4 DIESEL (309.)	616.910 - 2399 cc	81 →		**VKPC 88809**
L406 DG 2.4 DIESEL (309.)	616.910 - 2399 cc	68 →		**VKPC 88807**
LK406 DG 2.4 DIESEL (309.)	616.910 - 2399 cc	68 →		**VKPC 88807**
LKO406 DG 2.4 DIESEL (309.)	616.910 - 2399 cc	68 →		**VKPC 88807**
L407 DG 2.4 DIESEL (309.)	616.910 - 2399 cc	75 →		**VKPC 88807**
LK407 DG 2.4 DIESEL (309.)	616.910 - 2399 cc	75 →		**VKPC 88807**
LKO407 DG 2.4 DIESEL (309.)	616.910 - 2399 cc	75 →		**VKPC 88807**

W379 SERIES

O 309 B (379.)	102.959	→		**VKPC 88604**

W601 SERIES

208 (601.)	115.972	→		**VKPC 88807**
208 (601.)	115.955	→		**VKPC 88807**
208 (601.)	102.942	→		**VKPC 88613**
210 (601.)	115.972	→		**VKPC 88807**
210 (601.)	115.955	→		**VKPC 88807**
210 (601.)	102.942	→		**VKPC 88613**
200 3.0 DIESEL (601.)	617.913 - 2998 cc	82 → 89		**VKPC 88809**
207 2.4 DIESEL (601.)	616.917/934 - 2376 cc	72 → 81		**VKPC 88807**
207 2.4 DIESEL (601.)	615.944 - 2399 cc	72 → 81		**VKPC 88807**
207 2.4 DIESEL (601.)	616.937/939 - 2399 cc	81 → 90		**VKPC 88809**
208 2.3 DIESEL (601.)	601.940 - 2299 cc	83 →		**VKPC 88620**
208 2.4 DIESEL (601.)	616.917/934 - 2376 cc	72 → 81		**VKPC 88807**
208 2.4 DIESEL (601.)	616.937/939 - 2399 cc	81 → 90		**VKPC 88809**
208 2.4 DIESEL (601.)	615.944 - 2399 cc	72 → 81		**VKPC 88807**

www.bergab.ru Берг АБ bergab@ya.ru Тел. (495)-228-06-21, факс (495) 223-3071

www.bergab.ru Берг АБ bergab@ya.ru Тел. (495)-228-06-21, факс (495) 223-3071

210 2.5 DIESEL (601.)	601.940 - 2497 cc	83 →		VKPC 88620
307 2.4 DIESEL (601.)	615.944 - 2399 cc	72 → 81		VKPC 88807
W602 SERIES				
308 (602.)	115.972	→		VKPC 88807
308 (602.)	102.942	→		VKPC 88613
310 (602.)	115.972	→		VKPC 88807
310 (602.)	102.942	→		VKPC 88613
307 2.4 DIESEL (602.311, 312, 316)	615.944 - 2399 cc	72 → 81		VKPC 88807
307 2.4 DIESEL (602.)	616.939 - 2399 cc	81 → 90		VKPC 88809
307 2.4 DIESEL (602.)	616.934 - 2404 cc	72 → 81		VKPC 88807
308 2.3 DIESEL (602.)	601.940 - 2299 cc	83 →		VKPC 88620
309 3.0 DIESEL (602.)	617.913 - 2998 cc	82 → 89		VKPC 88808
310 2.5 DIESEL (602.)	602.940 - 2497 cc	83 →		VKPC 88620
W611 SERIES				
410 (611.)	102.942	→		VKPC 88613
407 2.4 DIESEL (611)	616.917/934 - 2376 cc	73 → 81		VKPC 88807
407 2.4 DIESEL (611)	616.937/939 - 2376 cc	81 → 90		VKPC 88809
407 2.4 DIESEL (611.317, 318, 367, 368)	616.913 - 2376 cc	81 → 90		VKPC 88807
408 2.3 DIESEL (611.317, 318, 367, 368)	601.940 - 2299 cc	83 →		VKPC 88620
409 3.0 DIESEL (611.)	617.913 - 2998 cc	82 → 89		VKPC 88808
410 2.5 DIESEL (611.)	602.940 - 2497 cc	83 →		VKPC 88620
W638 SERIES				
108 2.3 DIESEL (638.064, 164)	601.942 - 2299 cc	83 →		VKPC 88620
110 2.3 DIESEL (638.074, 174, 274)	601.970 - 2299 cc	83 →		VKPC 88620
W667 SERIES				
507 2.4 DIESEL (667.301, 302, 341, 361, 362)	616.914 - 2376 cc	83 →		VKPC 88807
508 2.3 DIESEL (667.301, 302, 341, 361, 362)	601.941 - 2299 cc	83 →		VKPC 88620
W901/W902/W903 SERIES				
208 2.3 DIESEL (901.3)	601.943 - 2299 cc	83 →		VKPC 88620
308 2.3 DIESEL (902.3)	601.943 - 2299 cc	83 →		VKPC 88620
408 2.3 DIESEL (903.3)	601.943 - 2299 cc	83 →		VKPC 88620
MB 100 SERIES (W631)				
2.4 DIESEL (631.332, 333, 334, 340, 342, 343, 344, 349)	616.963 - 2399 cc	88 → 96		VKPC 88809
SPRINTER (901,902,903,904)				
2.3 (901, 902, 903, 904)	111.979 - 2296 cc	05/96 →		VKPC 81624
2.5 DIESEL (901, 902, 903, 904)	601.940 - 2497 cc	94 →		VKPC 88620
2.9 TURBO DIESEL (901, 902, 903, 904)	602.980 - 2900 cc	12/94 →		VKPC 88620
VITO (638)				
2.0 (638.014, 114, 214)	111.948 - 1998 cc	95 →	Man.GBX, →|Mot. 002353	VKPC 88844
2.0 (638.014, 114, 214)	111.948 - 1998 cc	95 →	Man.GBX, |→Mot. 002354	VKPC 88845

www.bergab.ru Берг АБ bergab@ya.ru Тел. (495)-228-06-21, факс (495) 223-3071

www.bergab.ru Берг АБ bergab@ya.ru Тел. (495)-228-06-21, факс (495) 223-3071

MERCEDES-BENZ COMM. .../...

2.0 (638.014, 114, 214)	111.948 - 1998 cc	95 →	Auto.GBX, →|Mot. 000132	VKPC 88844
2.0 (638.014, 114, 214)	111.948 - 1998 cc	95 →	Auto.GBX, |→Mot. 000133	VKPC 88845
2.3 (638.234)	111.978 - 2299 cc	95 →	Man.GBX, →|Mot. 001594	VKPC 88844
2.3 (638.234)	111.978 - 2299 cc	95 →	Man.GBX, |→Mot. 001595	VKPC 88845
2.3 (638.234)	111.978 - 2299 cc	95 →	Auto.GBX, →|Mot. 000128	VKPC 88844
2.3 (638.234)	111.978 - 2299 cc	95 →	Auto.GBX, |→Mot. 000129	VKPC 88845
2.8 VR6 (638)	AAA - 2792 cc	98 →		VKPC 81611
2.3 DIESEL (638)	601.942 - 2296 cc	11/95 →		VKPC 88620
2.3 TURBO DIESEL (638)	601.970 - 2296 cc	11/95 →		VKPC 88620

MITSUBISHI

CARISMA

1.9 TURBO DIESEL (DA4A)	F8QT - 1870 cc	05/96 →		VKPC 86413

CELESTE

1.2 (A75V)	4G-36 - 1198 cc	11/76 → 03/79		VKPC 95004
1.4 (A72V)	4G-33 - 1439 cc	06/77 → 03/79		VKPC 95004
1.4 (A143A)	G-33B - 1439 cc	06/77 → 03/78		VKPC 95004
1.6 (A73)	4G-32 - 1597 cc	11/75 → 03/79		VKPC 95004
1.6 (A144)	G-32B - 1597 cc	06/77 → 03/79		VKPC 95004
1.6 (A174)	G-32B - 1597 cc	04/79 → 12/87		VKPC 95004
2.0 (A146A)	G-52B - 1998 cc	06/79 → 80		VKPC 95602

COLT / MIRAGE

1.2 (C15A)	4G-16 - 1198 cc	84 → 05/92		VKPC 95008
1.3 (C11A, C11V)	G-13B - 1298 cc	10/83 → 09/87		VKPC 95008
1.3 (C51A, C51V)	4G-13 - 1298 cc	09/87 → 05/92		VKPC 95008
1.5 (C12A, C12V, C12W, C32V)	G-15B/4G-15 - 1468 cc	10/83 → 10/90		VKPC 95008
1.5 (C12V, C12W)	G-15B - 1468 cc	10/90 → 94		VKPC 95008
1.5 (C18A)	G-31B - 1468 cc	02/86 → 12/88		VKPC 95010
1.5 (C52A, C72A, C84A)	4G-15 - 1468 cc	09/87 → 05/92		VKPC 95008
1.6 TURBO (C13A)	G-32B/4G-32 - 1597 cc	10/83 → 10/90		VKPC 95010
1.6 (C53A)	4G-61 - 1595 cc	04/88 → 05/90		VKPC 95427
1.8 GTI 16V (C58A)	4G-67 - 1835 cc	11/89 → 05/92		VKPC 95424
1.8 DIESEL (C14A, C14V, C14W, C34V)	4D-65 - 1795 cc	10/83 → 05/86		VKPC 95402
1.8 DIESEL (C14A, C14V, C14W, C34V)	4D-65 - 1795 cc	06/86 → 02/89		VKPC 95404
1.8 DIESEL (C14W, C34V)	4D-65 - 1795 cc	02/89 → 94		VKPC 95404
1.8 DIESEL (C54A)	4D-65 - 1795 cc	04/88 → 05/92		VKPC 95404

CORDIA

1.6 (A212)	G-32B - 1597 cc	02/82 → 12/88		VKPC 95010
1.8 (A215)	G-37B - 1755 cc	08/84 → 12/87		VKPC 95010

ECLIPSE

2.0 (D22A, D27A)	4G-63 - 1997 cc	09/89 → 94		VKPC 95424

www.bergab.ru Берг АБ bergab@ya.ru Тел. (495)-228-06-21, факс (495) 223-3071

www.bergab.ru Берг АБ bergab@ya.ru Тел. (495)-228-06-21, факс (495) 223-3071

FORTE

1.6 (L021P)	4G-32 - 1597 cc	11/79 → 09/82	**VKPC 95004**
1.6 (L25P)	G-32B - 1597 cc	10/82 →	**VKPC 95004**
2.0 (L022)	4G-52 - 1997 cc	10/80 → 09/82	**VKPC 95602**
2.0 (L026)	G-63B - 1997 cc	10/82 → 12/87	**VKPC 95422**

GALANT

1.6 (A121)	4G-32 - 1597 cc	01/77 → 09/82	**VKPC 95004**
1.6 (A131, A161)	G-32B - 1597 cc	01/77 → 03/84	**VKPC 95004**
1.6 (E11A)	G-32B - 1597 cc	03/84 → 10/87	**VKPC 95010**
1.6 (E31A)	4G-32 - 1597 cc	12/87 →	**VKPC 95010**
1.8 (A114)	4G-51 - 1755 cc	10/75 → 04/76	**VKPC 95602**
1.8 (E32A, E97A)	4G-37 - 1755 cc	12/87 →	**VKPC 95010**
1.8 (E35A)	4G-67 - 1755 cc	04/89 → 94	**VKPC 95424**
1.8 (E12A)	G-37B - 1755 cc	08/83 → 12/85	**VKPC 95010**
2.0 (A122, A132)	4G-51/G-51B - 1997 cc	76 → 79	**VKPC 95602**
2.0 (A123, A133)	4G-52/G-52B - 1997 cc	05/76 → 10/80	**VKPC 95602**
2.0 (A168V)	G-63B - 1997 cc	09/81 → 09/86	**VKPC 95422**
2.0 (A57C, A115)	4G-52 - 1997 cc	10/75 → 04/76	**VKPC 95602**
2.0 4WD (E33A)	4G-63 - 1997 cc	06/88 → SOHC	**VKPC 95423**
2.0 4WD (E33A)	4G-63 - 1997 cc	06/88 → DOHC	**VKPC 95424**
2.0 4WD (E39A)	4G-63 - 1997 cc	06/88 → SOHC	**VKPC 95423**
2.0 4WD (E39A)	4G-63 - 1997 cc	06/88 → DOHC	**VKPC 95424**
2.0 4WD (E38A)	4G-63 - 1997 cc	12/88 →	**VKPC 95423**
2.6 (A135A, 166A)	G-54B - 2555 cc	05/79 → 11/80	**VKPC 95602**
1.8 DIESEL (E34A)	4D-65 - 1795 cc	12/1287 →	**VKPC 95404**
1.8 DIESEL (E14A)	4D-65 - 1795 cc	03/84 → 03/88	**VKPC 95402**
2.3 DIESEL (A167A)	4D-55 - 2346 cc	04/80 → 12/83	**VKPC 95010**

LANCER / FIORE

1.2 (A155A)	G-11B - 1198 cc	02/82 → 10/83	**VKPC 95008**
1.2 (A156)	G-12B - 1198 cc	02/82 → 10/83	**VKPC 95008**
1.2 (C15A, C65A)	4G-16 - 1198 cc	84 → 05/92	**VKPC 95008**
1.3 (C11A, C11V, C51A, C61A, CA1, CB1)	4G-13/G-13B - 1298 cc	10/83 →	**VKPC 95008**
1.5 (C12A, C12V, C12W)	G-15B/4G-15 - 1468 cc	10/83 → 88	**VKPC 95008**
1.5 (C12W, C32V, C62A)	G-15B/4G-15 - 1468 cc	88 →	**VKPC 95008**
1.5 (C18A)	G-31B - 1468 cc	02/86 → 12/88	**VKPC 95010**
1.6 (A73)	4G-32 - 1597 cc	11/75 → 03/79	**VKPC 95004**
1.6 (A144)	G-32B - 1597 cc	06/77 → 03/79	**VKPC 95004**
1.6 (A174)	G-32B - 1597 cc	04/79 → 12/87	**VKPC 95004**
1.6 (C63A)	4G-61 - 1595 cc	04/88 → 05/90	**VKPC 95427**
1.6 (C66A, C76A)	4G-92 - 1597 cc	06/92 →	**VKPC 95426**
1.6 TURBO (C13A)	G-32B/4G-32 - 1597 cc	10/83 → 88	**VKPC 95010**
1.8 (C77A)	4G-37 - 1835 cc	05/89 → 05/92	**VKPC 95010**
1.8 (C69A)	4G-93 - 1834 cc	06/92 →	**VKPC 95426**
1.8 GTI 16V (C68A)	4G-67 - 1835 cc	11/89 → 05/92	**VKPC 95424**
1.8 DIESEL (C14A, C14V, C14W, C34W)	4D-65 - 1795 cc	01/84 → 05/86	**VKPC 95402**
1.8 DIESEL (C14A, C14V, C14W, C34W)	4D-65 - 1795 cc	06/86 → 88	**VKPC 95404**
1.8 DIESEL (C64A)	4D-65 - 1795 cc	04/88 → 05/92	**VKPC 95404**
2.0 DIESEL (C67A)	4D-68 - 1998 cc	06/92 →	**VKPC 95614**

PAJERO / SHOGUN

2.4 (V21C, V21W, V41W)	4G-64 - 2350 cc	12/90 → 04/92	**VKPC 95422**
2.6 (L042G, L047G)	4G-54/G-54B - 2555 cc	01/83 →	**VKPC 95602**
3.0 (L141G, L146G)	6G-72 - 2972 cc	11/88 →	VKPC 95610
3.0 TURBO (V23C, V23W)	6G-72 - 2972 cc	12/90 →	VKPC 95610
3.0 TURBO (V43W)	6G-72 - 2972 cc	12/90 →	VKPC 95610
2.3 DIESEL (L043G, L048G)	4D-55 - 2346 cc	01/83 → 04/86	**VKPC 95405**
2.5 DIESEL (L044G, L049G)	4D-56 - 2476 cc	05/86 →	**VKPC 95405**
2.5 DIESEL (L144G, L149G)	4D-56 - 2476 cc	11/89 →	**VKPC 95405**

www.bergab.ru Берг АБ bergab@ya.ru Тел. (495)-228-06-21, факс (495) 223-3071

www.bergab.ru Берг АБ bergab@ya.ru Тел. (495)-228-06-21, факс (495) 223-3071

MITSUBISHI .../...

2.5 DIESEL (V24C, V24W, V44W)	4D-56 - 2476 cc	12/90 →	VKPC 95800

SAPPORO

1.6 (A121)	4G-32 - 1597 cc	01/77 → 09/82	VKPC 95004
1.6 (A131, A161)	G-32B - 1597 cc	01/77 → 03/84	VKPC 95004
1.6 (E11A)	G-32B - 1597 cc	03/84 → 10/87	VKPC 95010
1.8 (A162)	G-62B - 1795 cc	08/81 → 07/83	VKPC 95422
2.0 (A163, 164)	G-63B/G-63BT - 1997 cc	11/80 → 09/83	VKPC 95422
2.0 (A122, A132)	4G-51/G-51B - 1997 cc	76 → 79	VKPC 95602
2.0 (A123, A133)	4G-52/G-52B - 1997 cc	05/76 → 10/80	VKPC 95602
2.0 (A168V)	G-63B - 1997 cc	09/81 → 09/86	VKPC 95422
2.6 (A135A, 166A)	G-54B - 2555 cc	05/79 → 11/80	VKPC 95602
1.8 DIESEL (E14A)	4D-65 - 1795 cc	03/84 → 03/88	VKPC 95402
2.3 DIESEL (A167A)	4D-55 - 2346 cc	04/80 → 12/83	VKPC 95010

SIGMA

1.6 (A121)	4G-32 - 1597 cc	01/77 → 09/82	VKPC 95004
1.6 (A131, A161)	G-32B - 1597 cc	01/77 → 03/84	VKPC 95004
1.6 (E11A)	G-32B - 1597 cc	03/84 → 10/87	VKPC 95010
2.0 (A115)	4G-52 - 1997 cc	10/75 → 04/76	VKPC 95602
2.0 (A122, A132)	4G-51/G-51B - 1997 cc	76 → 79	VKPC 95602
2.0 (A123, A133)	4G-52/G-52B - 1997 cc	05/76 → 10/80	VKPC 95602
2.0 (A168V)	G-63B - 1997 cc	09/81 → 09/86	VKPC 95422
2.6 (A135A, 166A)	G-54B - 2555 cc	05/79 → 11/80	VKPC 95602
1.8 DIESEL (E14A)	4D-65 - 1795 cc	03/84 → 03/88	VKPC 95402
2.3 DIESEL (A167A)	4D-55 - 2346 cc	04/80 → 12/83	VKPC 95010

SPACE WAGON / CHARIOT

1.6 (D02W)	G-32B - 1597 cc	01/83 → 10/86	VKPC 95010
1.8 (D05V, D05W)	4G-37 - 1755 cc	10/83 →	VKPC 95010
1.8 (N31W, N41W)	4G-93 - 1834 cc	05/91 → 05/92	VKPC 95426
2.0 (D04W, D08W)	4G-63/G-63B - 1997 cc	06/86 →	VKPC 95611
2.0 (N33W)	4G-63 - 1997 cc	06/92 →	VKPC 95612
2.0 4wd (N43W)	4G-63 - 1997 cc	06/92 →	VKPC 95612
2.4 (N34W)	4G-64 - 2350 cc	05/91 → 05/92	VKPC 95423
2.4 (N34W)	4G-64 - 2350 cc	06/92 →	VKPC 95612
1.8 DIESEL (D09V, D09W)	4D-65 - 1795 cc	07/85 →	VKPC 95402
1.8 DIESEL (N35W)	4D-65 - 1795 cc	05/91 → 05/92	VKPC 95402
2.0 TURBO DIESEL (N38W)	4D-68 - 1998 cc	10/92 →	VKPC 95614

TREDIA

1.6 (A212)	G-32B - 1597 cc	02/82 → 12/88	VKPC 95010
1.8 (A215)	G-37B - 1755 cc	08/84 → 12/87	VKPC 95010

MITSUBISHI COMMERCIAL

L200

1.6 (L021)	4G-32 - 1597 cc	08/78 → 09/82	VKPC 95004
1.6 (L025)	G-32B - 1597 cc	10/82 → 12/86	VKPC 95004
2.0 (L22G)	4G-52 - 1997 cc	09/80 → 08/82	VKPC 95602

L300 DELICA

1.4 (L031P, L031PV)	4G-33 - 1439 cc	06/79 → 09/82	VKPC 95004
1.4 (L036P, L036PV, R01)	G-33B - 1439 cc	10/82 →	VKPC 95004
1.4 (L036P)	4G-33 - 1439 cc	10/82 →	VKPC 95004

www.bergab.ru Берг АБ bergab@ya.ru Тел. (495)-228-06-21, факс (495) 223-3071

www.bergab.ru Берг АБ bergab@ya.ru Тел. (495)-228-06-21, факс (495) 223-3071

1.6 (L032P, L032PV, L034P)	4G-32 - 1597 cc	06/79 → 09/82		**VKPC 95004**
1.6 (L33P, L33PV, L33PW)	4G-32 - 1597 cc	06/79 → 12/89		**VKPC 95004**
1.6 (L63P, L63PV, L63PW, P02, P12)	G-32B - 1597 cc	06/79 → 12/89		**VKPC 95004**
1.6 (LO63, P02, P12)	G-32B - 1597 cc	12/89 →		**VKPC 95004**
2.0 (L037)	G-63B - 1997 cc	11/83 → 06/86		**VKPC 95422**
2.0 (P03, P23)	G-63B - 1997 cc	06/86 → 94		**VKPC 95422**
2.3 DIESEL (L038P, L038PV, L038PW, L038G, L068PW)	4D-55 - 2346 cc	10/82 → 08/86		**VKPC 95405**
2.3 DIESEL (L038GV, L038GW, L068P, L068PV)	4D-55 - 2346 cc	10/82 → 08/86		**VKPC 95405**
2.5 DIESEL	4D-56 - 2476 cc	04/86 → 05/93		**VKPC 95405**

PICK UP

1.6 (L021)	4G-32 - 1597 cc	08/78 → 09/82		**VKPC 95004**
1.6 (L025)	G-32B - 1597 cc	10/82 → 12/86		**VKPC 95004**
2.0 (L22G)	4G-52 - 1997 cc	09/80 → 08/82		**VKPC 95602**

NISSAN

ALMERA

1.4 (N15)	GA14DE - 1392 cc	07/95 →		**VKPC 92408**
1.6 (N15)	GA16DE - 1596 cc	07/95 →		**VKPC 92408**
2.0 (N15)	SR20DE - 1998 cc	04/96 → 01/98		**VKPC 92412**

BLUEBIRD

1.6 (910)	L16S - 1595 cc	01/80 →	AC	VKPC 92207
1.6 (T12 / T72)	CA16S - 1598 cc	12/85 → 06/86		**VKPC 92401**
1.6 (T12 / T72)	CA16S - 1598 cc	07/86 →		**VKPC 92404**
1.8 (910)	L18S - 1770 cc	01/80 →	AC	VKPC 92207
1.8 (910)	CA18 - 1809 cc	10/82 → 09/83		**VKPC 92601**
1.8 (T12 / T72)	CA18D - 1809 cc	11/88 →		**VKPC 92404**
1.8 (U11)	CA18S - 1809 cc	01/84 → 07/86		**VKPC 92401**
1.8 (U12)	CA18 - 1809 cc	09/87 → 09/91		VKPC 92405
1.8 TURBO (U11)	CA18T - 1809 cc	01/84 → 07/86		**VKPC 92401**
1.8 TURBO (T12 / T72)	CA18T - 1809 cc	12/85 → 06/86		**VKPC 92401**
1.8 TURBO (T12 / T72)	CA18T - 1809 cc	07/86 →		**VKPC 92404**
1.8 TURBO (910)	L18T - 1770 cc	01/80 →	AC	VKPC 92207
2.0 (910)	Z20E - 1952 cc	01/82 →		**VKPC 92630**
2.0 (U11)	CA20S - 1973 cc	01/84 → 07/86		**VKPC 92401**
2.0 (T12 / T72 / U11)	CA20E - 1973 cc	03/86 → 07/86		**VKPC 92401**
2.0 (T12 / T72)	CA20S - 1973 cc	12/85 → 07/86		**VKPC 92401**
2.0 (T12 / T72 / U11)	CA20E/S - 1973 cc	07/86 →		**VKPC 92404**
2.0 DIESEL (910)	LD20 - 1952 cc	01/80 → 04/84	Ø	**VKPC 92610**
2.0 DIESEL (T12 / T72)	LD20 - 1952 cc	12/85 →		**VKPC 92615**
2.0 DIESEL (U11)	LD20 - 1952 cc	01/84 →		**VKPC 92615**
2.0 TURBO DIESEL (910)	LD20T - 1952 cc	12/82 →	Ø	**VKPC 92610**
2.0 TURBO DIESEL (U11)	LD20T - 1952 cc	01/84 →		**VKPC 92615**

CEDRIC

2.0 (Y30)	CA20S - 1973 cc	10/83 →		**VKPC 92601**

CHERRY/PULSAR

1.0 (N10)	A10S - 988 cc	08/78 → 07/81		VKPC 92201
1.0 (N10 / N12)	E10S - 988 cc	08/81 →		**VKPC 92205**
1.2 (F10 / F11)	A12 - 1171 cc	03/73 →		VKPC 92201
1.2 (F10 / F11)	A12 - 1171 cc	03/73 →	AC	**VKPC 92203**
1.2 (N10)	A12S - 1171 cc	08/78 → 07/81		VKPC 92201
1.3 (N10 / N12)	E13S - 1270 cc	08/81 →		**VKPC 92205**
1.3 (N12)	310 (Alfaromeo) - 1350 cc	83 → 86		**VKPC 82201**
1.4 (F10 / F11)	A14 - 1397 cc	09/74 →		VKPC 92201

www.bergab.ru Берг АБ bergab@ya.ru Тел. (495)-228-06-21, факс (495) 223-3071

NISSAN .../...

1.4 (F10 / F11)	A14 - 1397 cc	09/74 →	AC	**VKPC 92203**
1.4 (N10)	A14S - 1397 cc	08/80 → 07/81		VKPC 92201
1.5 (N10)	E15S - 1488 cc	08/81 →		**VKPC 92205**
1.5 (N12)	310 (Alfaromeo) - 1490 cc	83 → 86		**VKPC 82201**
1.5 TURBO (N12)	E15ET/S - 1488 cc	04/82 →		**VKPC 92205**
1.6 (N12)	E16S - 1488 cc	06/85 →		**VKPC 92205**
1.7 DIESEL (N12)	CD17-1680 cc	10/82 →		VKPC 92420

LAUREL

2.0 (C32)	CA20S - 1998 cc	11/84 → 01/86		**VKPC 92601**
2.4 (C32)	L24S - 2389 cc	11/84 → 01/86		**VKPC 92802**
2.4 (C32)	L24E - 2389 cc	01/85 →		**VKPC 92802**
240 2.8 (C230)	L28 - 2793 cc	01/77 → 02/81		**VKPC 92802**

MAXIMA

2.0 (A32)	VQ20DE - 1995 cc	10/94 →		**VKPC 92822**
3.0 (J30)	VG30E - 2960 cc	12/88 →		VKPC 92821
3.0 (A32)	VQ30DE - 2988 cc	10/94 →		**VKPC 92822**

MICRA / MARCH

1.0 (K10)	MA10S - 988 cc	12/82 → 12/88		**VKPC 92204**
1.0 (K10)	MA10S - 988 cc	12/88 → 08/92		**VKPC 92209**
1.0 (K11E)	CG10DE - 997 cc	08/92 →		**VKPC 92208**
1.2 (K10)	MA12S - 1235 cc	07/86 → 12/88		**VKPC 92204**
1.2 (K10)	MA12S - 1235 cc	12/88 → 07/92		**VKPC 92209**
1.3 (K11E)	CG13DE - 1274 cc	08/92 →		**VKPC 92208**

100 NX COUPE

1.6 (FB13)	GA16 - 1597 cc	01/90 →		**VKPC 92408**
2.0 (FB13)	SR20DE - 1998 cc	10/90 →		**VKPC 92412**

PATROL

2.8 (160 / 260)	L28 - 2753 cc	11/79 →		**VKPC 92802**
2.7 DIESEL (160 / 260)	MD 27 - 2710 cc	09/85 →		**VKPC 92800**
2.8 DIESEL (160 / 260)	A428E - 2820 cc	09/85 →		**VKPC 92800**
2.8 DIESEL (160 / 260)	A428.II - 2820 cc	12/87 →		**VKPC 92800**
2.8 TURBO DIESEL (160 / 260)	A428N/T - 2820 cc	04/89 → 03/93		**VKPC 92800**
2.8 TURBO DIESEL (160 / 260)	A428N/T - 2820 cc	03/93 →		**VKPC 92802**
2.8 TURBO DIESEL (Y60)	R28T - 2826 cc	09/88 →		**VKPC 92810**
2.8 DIESEL / TURBO DIESEL (260)	RD28/R28T - 2826 cc	04/89 →		**VKPC 92810**
3.2 DIESEL / TURBO DIESEL (160 / 260)	SD33/SD33T - 3246 cc	11/79 →		**VKPC 92820**

PICKUP

1.6 (720)	J16 - 1567 cc	09/79 →		VKPC 92648
1.8 (720)	L18 - 1770 cc	09/79 → 08/85	~~AC~~	VKPC 92207
1.8 (720)	L18 - 1770 cc	09/79 → 08/85	AC	**VKPC 92630**
2.0 (D21)	Z20 - 1952 cc	09/85 → 05/94		VKPC 92207
2.1 (720)	Z22 - 2118 cc	04/83 → 08/85		**VKPC 92630**
2.4 (D21)	Z24 - 2389 cc	09/85 → 04/92		VKPC 92207
2.4 (D21)	KA24E - 2389 cc	04/92 →		**VKPC 92645**
2.2 DIESEL (720)	SD22 - 2164 cc	09/79 → 08/85		**VKPC 92649**
2.3 DIESEL (720)	SD23 - 2289 cc	01/83 → 08/85		**VKPC 92649**
2.3 DIESEL (D21)	SD23 - 2289 cc	09/85 → 10/87		**VKPC 92650**
2.5 DIESEL (720)	SD25 - 2488 cc	01/83 → 08/85		**VKPC 92649**
2.5 DIESEL (D21)	SD25 - 2488 cc	09/85 → 10/87		**VKPC 92650**

www.bergab.ru Берг АБ bergab@ya.ru Тел. (495)-228-06-21, факс (495) 223-3071

2.5 TURBO DIESEL (D21)	TD25 - 2494 cc	10/87 →		**VKPC 92651**

PRAIRIE

1.5 (M10)	E15S - 1487 cc	09/82 →		**VKPC 92205**
1.6 (P10E)	GA16DS - 1597 cc	06/90 →		**VKPC 92408**
1.8 (M10)	CA18S - 1809 cc	07/83 → 06/86		**VKPC 92401**
1.8 (M10)	CA18S - 1809 cc	07/86 →		**VKPC 92404**
2.0 (M10)	CA20S - 1973 cc	07/83 → 06/86		**VKPC 92401**
2.0 (M10)	CA20S - 1973 cc	07/86 →		**VKPC 92404**
2.0 (M10)	CA20E - 1973 cc	01/86 →		**VKPC 92404**
2.0 (M11)	CA20E/S - 1973 cc	10/88 → 12/88		**VKPC 92404**
2.0 (M11)	CA20E/S - 1973 cc	12/88 → 04/92		VKPC 92405
2.0 (P10E)	SR20D - 1998 cc	06/90 →		**VKPC 92412**

PRIMERA

1.6 (P10E)	GA16D - 1596 cc	06/90 →		**VKPC 92408**
1.6 (W10)	GA16D - 1596 cc	07/90 →		**VKPC 92408**
1.6 (P11E)	GA16D - 1596 cc	06/96 →		**VKPC 92408**
1.6 (WP11E)	GA16D - 1596 cc	01/98 →		**VKPC 92408**
2.0 (P10E)	SR20D - 1998 cc	06/90 →		**VKPC 92412**
2.0 (W10)	SR20D - 1998 cc	07/90 →		**VKPC 92412**
2.0 (P11E)	SR20D - 1998 cc	06/96 →		**VKPC 92412**
2.0 (WP11E)	SR20D - 1998 cc	01/98 →		**VKPC 92412**

SERENA

1.6 (C23M)	GA16DE - 1596 cc	07/92 →		**VKPC 92408**
2.0 (C23M)	SR20DE - 1998 cc	07/92 → 11/93		**VKPC 92412**
2.0 DIESEL (C23M)	LD20 - 1952 cc	92 → 94		**VKPC 92600**
2.3 DIESEL (C23M)	LD23 - 2283 cc	09/94 →		**VKPC 92926**

SILVIA

1.8 (S110)	L18E - 1770 cc	01/79 →		VKPC 92207
1.8 TURBO (S12)	CA18ET - 1809 cc	10/83 →		**VKPC 92601**
2.0 (S12)	CA20E - 1974 cc	10/83 →		**VKPC 92601**

STANZA

1.6 (T11/PT11/FT11/FPT11)	CA16S - 1598 cc	06/81 → 07/86		**VKPC 92401**
1.6 (T12)	CA16S - 1598 cc	07/86 →		**VKPC 92404**
1.8 (PT11/PT12)	CA18S - 1809 cc	06/81 → 07/86		**VKPC 92401**
1.8 (T12)	CA18S - 1809 cc	07/86 →		**VKPC 92404**
1.8 (T12)	CA18D - 1809 cc	11/88 →		**VKPC 92615**
2.0 (T12)	CA20S/E - 1998 cc	12/85 → 07/86		**VKPC 92401**
2.0 (T12)	CA20S/E - 1998 cc	07/86 →		**VKPC 92404**
2.0 DIESEL (T12)	LD20 - 1952 cc	12/85 →		**VKPC 92615**
1.7 TURBO DIESEL (T11)	CD17T - 1680 cc	01/84 →		**VKPC 92422**

SUNNY

1.0 (N13)	E10S - 988 cc	06/86 →		**VKPC 92205**
1.2 120Y (B210/B310)	A14 - 1397 cc	10/75 →		VKPC 92201
1.2 120Y (B210/B310)	A14 - 1397 cc	10/75 →	AC	**VKPC 92203**
1.3 (B11)	E13S - 1270 cc	03/82 → 05/88		**VKPC 92205**
1.3 (N13)	E13S - 1270 cc	06/86 →		**VKPC 92205**
1.4 120Y (B210/B310)	A14 - 1397 cc	10/75 →		VKPC 92201
1.4 120Y+G2379 (B210/B310)	A14 - 1397 cc	10/75 →	AC	**VKPC 92203**
1.4 (N13)	GA14S - 1392 cc	10/88 →		**VKPC 92406**
1.4 (N14)	GA14DE/DS - 1392 cc	10/90 →		**VKPC 92408**
1.5 (B11/B12/N13)	E15S - 1488 cc	03/82 → 10/88		**VKPC 92205**
1.5 (N13)	E15S - 1488 cc	06/86 →		**VKPC 92205**
1.6 (B11/B12/N13)	E16S,E16I - 1597 cc	03/85 → 10/88		**VKPC 92205**
1.6 (B12/N13)	CA16D - 1598 cc	02/87 → 10/88		**VKPC 92404**

www.bergab.ru Берг АБ bergab@ya.ru Тел. (495)-228-06-21, факс (495) 223-3071

NISSAN .../...

1.6 (B12/N13)	GA16S/I - 1596 cc	10/88 →		**VKPC 92406**
1.6 (B13/N14/Y10)	GA16DE/DS - 1596 cc	10/90 →		**VKPC 92408**
1.8 (B12/N13)	CA18D - 1809 cc	10/88 →		**VKPC 92404**
2.0 (B13/N14)	SR20DE - 1998 cc	10/90 →		**VKPC 92412**
DIESEL 1.7 (B11)	CD17 - 1680 cc	08/82 → 05/88		VKPC 92420
DIESEL 1.7 (B12/N13)	CD17 - 1680 cc	06/86 →		**VKPC 92422**
DIESEL 1.7 (Y10)	CD17 - 1680 cc	05/92 → 10/93		**VKPC 92422**

SX COUPE

200 SX 1.8 TURBO (S13)	CA18DT - 1809 cc	09/88 → 07/93		**VKPC 92601**
280 SX 2.8 (S130)	L28E - 2753 cc	10/78 → 06/83		**VKPC 92802**

TERRANO

I 2.4 (WD21)	Z24I - 2389 cc	08/87 → 07/92		**VKPC 92630**
II 2.4 (R20)	KA24E - 2389 cc	02/93 →		**VKPC 92645**
I 3.0 (WD21)	VG30E - 2960 cc	01/90 →		**VKPC 92823**

VIOLET

1.4 (A10/A11)	A14 - 1397 cc	05/77 → 05/81		VKPC 92201
1.4 (A10/A11)	A14 - 1397 cc	05/77 → 05/81	AC	**VKPC 92203**
1.6 (A10/A11)	Z16 - 1595 cc	05/77 → 05/81		VKPC 92207
1.6 (A10/A11)	Z16 - 1595 cc	05/77 → 05/81	AC	**VKPC 92630**
1.8 TURBO DIESEL (RT12)	CADET - 1809 cc	10/85 → 10/86		**VKPC 92601**

NISSAN COMMERCIAL

TRADE

2.0 DIESEL	LD20E - 1952 cc	11/86 →		**VKPC 92600**
2.3 DIESEL (TX75)	LD23 - 2283 cc	12/96 →		**VKPC 92926**
3.0 DIESEL (KE30)	BD30 - 3000 cc	04/93 → 06/94		VKPC 92827

URVAN

2.0 (E24)	Z20S - 1952 cc	02/87 → 07/94		**VKPC 92802**
2.4 (E24)	Z24I - 2389 cc	05/89 → 11/95		**VKPC 92634**

VANETTE / CARGO

1.5 (C120)	A15 - 1488 cc	06/81 →	~~AC~~	VKPC 92201
1.5 (C120)	A15 - 1488 cc	06/81 →	AC	**VKPC 92203**
1.5 (GC22)	A15S - 1488 cc	07/87 →		**VKPC 92203**
2.0 (GC22)	Z20S - 1952 cc	09/86 →		**VKPC 92802**
2.4 (GC22)	Z24I - 2389 cc	09/86 →		**VKPC 92634**
2.0 DIESEL (C120)	LD20 - 1952 cc	06/80 → 04/84		**VKPC 92610**
2.0 DIESEL (GC22)	LD20 - 1952 cc	09/86 →		**VKPC 92600**
2.0 DIESEL (C220)	LD20 - 1952 cc	04/87 →		**VKPC 92600**
2.3 DIESEL (C23)	LD23 - 2283 cc	09/94 →		**VKPC 92926**

OPEL

ADMIRAL A/B

2.8	28S - 2784 cc	65 → 69		**VKPC 85600**

AGILA

1.0 12V	Z10XE - 973 cc	09/00 →		**VKPC 85220**

www.bergab.ru Берг АБ bergab@ya.ru Тел. (495)-228-06-21, факс (495) 223-3071

www.bergab.ru Берг АБ bergab@ya.ru Тел. (495)-228-06-21, факс (495) 223-3071

1.2 16V	Z12XE - 1199 cc	09/00 →		**VKPC 85220**	

ASCONA A

1.2	12S - 1196 cc	→ 07/75	OHV	VKPC 85200	
1.6	16N/16S - 1584 cc	→ 07/75		**VKPC 85600**	
1.9	19N - 1897 cc	→ 07/75		**VKPC 85600**	

ASCONA B

1.2	12N/12S - 1196 cc	76 → 79	OHV	**VKPC 85203**	
1.3	13N/13S - 1297 cc	79 → 08/81		**VKPC 85202**	**VKMC 05103**
1.6	16S - 1584 cc	08/75 → 08/81	~~CH~~	**VKPC 85600**	
1.6	16S - 1584 cc	08/75 → 08/81	CH, →|Mot. 570624	**VKPC 85600**	
1.8	18S - 1796 cc	08/75 → 08/81		**VKPC 85400**	
1.9	19 - 1897 cc	08/75 → 08/80		**VKPC 85600**	
2.0	20S/20E - 1979 cc	77 → 08/81	~~CH~~, →|CH 6067585	**VKPC 85600**	
2.0	20S/20E - 1979 cc	77 → 08/81	~~CH~~, |→CH 6067586		**VKPA 85608**
2.0	20S - 1979 cc	77 → 08/81	CH, →|Mot. 88909	**VKPC 85600**	
2.0 DIESEL	20D - 1998 cc	79 → 08/81	→|Mot. 102685		**VKPA 85605**

ASCONA C (J82)

1.3	13N/13S - 1297 cc	82 → 88		**VKPC 85202**	**VKMC 05103**
1.6	16S - 1584 cc	08/81 → 87		**VKPC 85400**	
1.6	16SV/C16LZ/16NZ/E16NZ - 1598 cc	87 → 88		**VKPC 85401**	**VKMC 05120**
1.6	16N/16SH - 1598 cc	82 → 86		**VKPC 85400**	**VKMC 05400**
1.6	16N/16SH - 1598 cc	87 → 88		**VKPC 85407**	**VKMC 05401**
1.8	18E/C18NE - 1796 cc	08/81 → 87		**VKPC 85400**	**VKMC 05400**
1.8	18SE - 1796 cc	82 → 86		**VKPC 85400**	**VKMC 05400**
1.8	18SE - 1796 cc	82 → 86		**VKPC 85400**	**VKMC 05401**
1.8	18SE - 1796 cc	87 → 08/88		**VKPC 85407**	**VKMC 05401**
1.8	E18NV/S18NV - 1796 cc	08/81 → 87		**VKPC 85407**	
2.0	20NE/C20NE/20SEH - 1979 cc	08/81 → 87		**VKPC 85407**	
1.6 DIESEL	16D/16DA - 1598 cc	82 → 86		**VKPC 85406**	VKMC 05200
1.6 DIESEL	16DA - 1598 cc	87 → 08/88		**VKPC 85408**	**VKMC 05201**

ASTRA (T92)

1.4	14NV/C14NZ/14SE/C14SE/X14NZ - 1398 cc	92 → 98		**VKPC 85206**	**VKMC 05121**
1.4	X14XE - 1398 cc	92 → 98		**VKPC 85211**	
1.6	C16SE/C16NZ/X16SZ/X16SZR/ 16NZR - 1598 cc	92 → 98		**VKPC 85206**	**VKMC 05121**
1.6	16LZ2/16NZ2 - 1598 cc	92 → 98		**VKPC 85409**	
1.6	X16XE/X16XEL - 1598 cc	92 → 98		**VKPC 85211**	
1.8	C1.8NZ - 1796 cc	92 → 98	→|Mot. 14254438	**VKPC 85407**	**VKMC 05401**
1.8	C1.8NZ - 1796 cc	92 → 98	|→Mot. 14254439	**VKPC 85409**	
1.8i 16V	C1.8XE/C1.8XEL/X18XE/C18SEL - 1796 cc	92 → 98		**VKPC 85611**	
2.0	20SE/C20NE - 1998 cc	92 → 98	→|Mot. 14608700	**VKPC 85407**	**VKMC 05401**
2.0	20SE/C20NE - 1998 cc	92 → 98	|→Mot. 14608701	**VKPC 85409**	
2.0 16V (TAJ3)	20XE/C20XE - 1998 cc	92 → 98	→|Mot. 14142839	**VKPC 85610**	
2.0 16V (TAJ3)	20XE/C20XE - 1998 cc	92 → 98	|→Mot. 14142840	**VKPC 85611**	
2.0	X20XEV - 1998 cc	92 → 98		**VKPC 85611**	
1.7 DIESEL	17D/17DR - 1699 cc	92 → 98	→|Mot. 14363651	**VKPC 85408**	**VKMC 05201**
1.7 DIESEL	17D/17DR - 1699 cc	92 → 98	|→Mot. 14363652	**VKPC 85611**	
1.7 DIESEL	17DTL - 1699 cc	92 → 98		**VKPC 85611**	
1.7 TURBO DIESEL	17TD - 1699 cc	92 → 98	→|Mot. 855805	**VKPC 85404**	
1.7 TURBO DIESEL	17TD - 1699 cc	92 → 98	|→Mot. 855806	**VKPC 85620**	

www.bergab.ru Берг АБ bergab@ya.ru Тел. (495)-228-06-21, факс (495) 223-3071

www.bergab.ru Берг АБ bergab@ya.ru Тел. (495)-228-06-21, факс (495) 223-3071

OPEL .../...

ASTRA G (T98)

1.2i 16V	X12XE - 1199 cc	98 →		VKPC 85220	
1.4i 16V	X14XE - 1398 cc	98 →		VKPC 85211	
1.6i	X16SZR - 1598 cc	98 →		VKPC 85206	
1.6i 16V	C16SEL/X16XEL - 1598 cc	98 →		VKPC 85211	
1.8i 16V	X18XE1 - 1796 cc	98 →		VKPC 85624	
2.0i 16V	X20XEV - 1998 cc	98 →		VKPC 85611	
1.7 DIESEL	Y17DTL - 1699 cc	98 →	→|Mot. 14427284	VKPC 85611	
2.0 16V DTi	X20DTL/Y20DTH - 1995 cc	98 →		VKPC 85623	

ASTRA CLASSIC (M99)

1.4i 16V	X14NZ - 1398 cc	99 →		VKPC 85206	
1.6i	X16SZR - 1598 cc	99 →		VKPC 85206	
1.6i 16V	X16XEL - 1598 cc	99 →		VKPC 85211	

CALIBRA (C89)

2.0	X20XEV- 1998 cc	89 →		VKPC 85611	
2.0	C20NE - 1998 cc	09/89 → 02/93		VKPC 85407	VKMC 05401
2.0	C20NE - 1998 cc	02/93 →		VKPC 85409	
2.0 i.e 16V	C20XE/C20LET - 1998 cc	09/89 → 02/93		VKPC 85610	VKMC 05401
2.0 i.e 16V	C20XE/C20LET - 1998 cc	02/93 →		VKPC 85611	
2.5	C25XE/X25XE - 2498 cc	89 →		VKPC 85613	

CAMPO (TF0 & TF1)

2.5 DIESEL	25D - 2499 cc	92 → 10/94			VKPA 85605
3.1 TURBO DIESEL	31DT - 3100 cc	92 → 08/93			VKPA 85605

COMMODORE A/B/C

2.2	22 - 2197 cc	67 → 70		VKPC 85600	
2.5	25 - 2490 cc	72 → 83		VKPC 85600	
2.8	28SC/HC/EC - 2784 cc	72 → 83		VKPC 85600	

CORSA A (S83)

1.0	10S - 993 cc	83 → 92	OHV	VKPC 85201	
1.2	12N/12NC/E12GV - 1196 cc	83 → 92		VKPC 85201	
1.2	12S/12ST/12NV/C12NZ - 1196 cc	83 → 92		VKPC 85206	VKMC 05100
1.3	13S/13SB/13NB/C13N - 1297 cc	83 → 92		VKPC 85202	VKMC 05103
1.4	C14SE - 1398 cc	83 → 92		VKPC 85206	
1.4	14NV - 1398 cc	83 → 92	→|Mot. 19307805	VKPC 85401	VKMC 05120
1.4	14NV - 1398 cc	83 → 92	|→Mot. 19307806	VKPC 85206	
1.4	C14NZ - 1398 cc	83 → 92	→|Mot. 19311737	VKPC 85401	VKMC 05120
1.4	C14NZ - 1398 cc	83 → 92	|→Mot. 19311738	VKPC 85206	
1.6	C16SE/E16SE/C16NZ - 1598 cc	83 → 92	→|CH 02J22349	VKPC 85401	VKMC 05120
1.6	C16SE/E16SE/C16NZ - 1598 cc	83 → 92	|→CH 02J22350	VKPC 85206	
1.5 DIESEL / TURBO DIESEL	15D/15TD - 1488 cc	83 → 92	→|Mot. 804794	VKPC 85403	
1.5 DIESEL / TURBO DIESEL	15D/15TD - 1488 cc	83 → 92	|→Mot. 804795, →|Mot. 909999	VKPC 85404	
1.5 DIESEL / TURBO DIESEL	15D/15TD - 1488 cc	83 → 92	|→Mot. 910000	VKPC 85410	

CORSA B (S93)

1.0i 12V	X10XE - 993 cc	97 →		VKPC 85220	
1.2	X12SZ/12NZ/C12NZ - 1196 cc	93 →		VKPC 85206	VKMC 05100
1.2i 16V	X12XE - 1199 cc	98 →		VKPC 85220	
1.4	C14NZ/X14SZ/C14SE - 1398 cc	93 →		VKPC 85206	
1.4	X14XE/C14SEL - 1388 cc	93 →		VKPC 85211	
1.6	C16LZ/C16SEL/C16XE/X16XE - 1598 cc	93 →		VKPC 85211	

www.bergab.ru Берг АБ bergab@ya.ru Тел. (495)-228-06-21, факс (495) 223-3071

www.bergab.ru Берг АБ bergab@ya.ru Тел. (495)-228-06-21, факс (495) 223-3071

1.5 DIESEL	X15D/15D - 1488 cc	93 →	→|Mot. 877697	**VKPC 85410**	
1.5 DIESEL	X15D/15D - 1488 cc	93 →	|→Mot. 877698	**VKPC 85621**	
1.5 TURBO DIESEL	X15TD/15TD - 1488 cc	93 →	→|Mot. 877697	**VKPC 85410**	
1.5 TURBO DIESEL	X15D/15D - 1488 cc	93 →	|→Mot. 877696, →|Mot. 00076350	**VKPC 85621**	
1.5 TURBO DIESEL	X15TD/15TD - 1488 cc	93 →	|→Mot. 00076351	**VKPC 85622**	
1.7 DIESEL	17D/X17D - 1699 cc	93 →	→|Mot. 00877697	**VKPC 85404**	
1.7 DIESEL	17D/X17D - 1699 cc	94 →	|→Mot. 00877698	**VKPC 85620**	
CORSA C					
1.0 12V	Z10XE - 973 cc	09/00 →		**VKPC 85220**	
1.2 16V	Z12XE - 1199 cc	09/00 →		**VKPC 85220**	
1.8 16V	Z18XE - 1796 cc	09/00 →		**VKPC 85624**	
FRONTERA (U92 & U99)					
2.0	C20NE - 1998 cc	03/92 → 10/98	→|Mot. 14608700	**VKPC 85407**	**VKMC 05401**
2.0	C20NE - 1998 cc	03/92 → 10/98	|→Mot. 14608701, →|Mot. SV720102	**VKPC 85409**	
2.0	X20SE - 1998 cc	03/92 → 10/98		**VKPC 85409**	
2.2	X22XE - 2198 cc	03/92 → 10/98		**VKPC 85611**	
2.2	X22SE - 2198 cc	10/98 →		**VKPC 85611**	
2.4	C24NE - 2394 cc	03/92 → 10/98		**VKPC 85603**	
3.2	32 - 3200 cc	10/98 →			VKPA 85609
2.2 16V DTI	X22DTH - 2198 cc	10/98 →		**VKPC 85623**	
2.3 TURBO DIESEL	23TD - 2298 cc	03/92 → 10/98		**VKPC 85603**	
2.5 TURBO DIESEL	25TD - 2499 cc	96 → 98		**VKPC 82810**	
KADETT A					
1.1	11 - 1078 cc	62 → 65		VKPC 85200	
KADETT B					
1.0	10S - 993 cc	65 → 73	OHV	VKPC 85200	
1.2	12 - 1196 cc	67 → 73		VKPC 85200	
1.7	17N - 1698 cc	65 → 73		**VKPC 85600**	
1.9	19S - 1897 cc	65 → 73	|→CH 303178	**VKPC 85600**	
KADETT C					
1.0	10S - 993 cc	74 → 75	OHV	VKPC 85200	
1.0	10S - 993 cc	76 → 79	OHV	**VKPC 85203**	
1.2	12N/12S - 1196 cc	73 → 76	OHV	VKPC 85200	
1.2	12N/12S - 1196 cc	76 → 79	OHV	**VKPC 85203**	
1.6	16S - 1584 cc	09/73 → 08/79	OHV	**VKPC 85201**	
KADETT D					
1.0	10S - 993 cc	79 → 84	OHV	**VKPC 85201**	
1.2	12N/12S/12SC - 1196 cc	79 → 82	OHV	**VKPC 85201**	
1.2	12S/12ST - 1196 cc	81 → 84	OHC	**VKPC 85206**	**VKMC 05100**
1.3	13N/13NB/13S/C13N - 1297 cc	79 → 84		**VKPC 85202**	**VKMC 05103**
1.6	16SH - 1598 cc	81 → 84		**VKPC 85400**	**VKMC 05400**
1.8	18E - 1796 cc	83 → 84	OHC	**VKPC 85400**	**VKMC 05400**
1.6 DIESEL	16D - 1598 cc	82 → 84		**VKPC 85406**	VKMC 05200
KADETT E (T85)					
1.2	12S/12SC - 1196 cc	07/84 → 89	OHV	**VKPC 85201**	
1.2	12S/12ST - 1196 cc	07/84 → 89	OHC	**VKPC 85206**	**VKMC 05100**
1.3	13N/13S/13NB/C13N - 1297 cc	07/84 → 89		**VKPC 85202**	**VKMC 05103**
1.4	14NV - 1398 cc	07/84 → 93	OHC	**VKPC 85206**	

www.bergab.ru Берг АБ bergab@ya.ru Тел. (495)-228-06-21, факс (495) 223-3071

www.bergab.ru Берг АБ bergab@ya.ru Тел. (495)-228-06-21, факс (495) 223-3071

OPEL .../...

1.4	C14NZ - 1398 cc	07/84 → 93	→|CH 02J22349, →|Mot. 19311737	**VKPC 85401**	**VKMC 05120**
1.4	C14NZ - 1398 cc	07/84 → 93	|→CH 02J22350, |→Mot. 19311738	**VKPC 85206**	
1.6	16S - 1598 cc	07/84 → 93		**VKPC 85400**	**VKMC 05400**
1.6	16SV/C16LZ/C16NZ/E16NZ - 1598 cc	07/84 → 93	→|CH 02J22349	**VKPC 85401**	**VKMC 05120**
1.6	16SV/C16NZ/E16NZ - 1598 cc	07/84 → 93	|→CH 02J22350	**VKPC 85206**	
1.8	18E/C18NT/C18NE - 1796 cc	07/84 → 86		**VKPC 85400**	**VKMC 05400**
1.8	18SE - 1796 cc	86 → 93	L.H.D, →|Mot. 14237769	**VKPC 85400**	**VKMC 05400**
1.8	18SE - 1796 cc	86 → 93	L.H.D, |→Mot. 14237770	**VKPC 85407**	**VKMC 05401**
1.8	18SE - 1796 cc	86 → 93	R.H.D, →|Mot. 14056060	**VKPC 85400**	**VKMC 05400**
1.8	18SE - 1796 cc	86 → 93	R.H.D, |→Mot. 14056061	**VKPC 85407**	**VKMC 05401**
1.8	E18NV/S18NV - 1796 cc	03/87 → 93	→|Mot. 14254438	**VKPC 85407**	**VKMC 05401**
1.8	C18NZ - 1796 cc	86 → 93	→|Mot. 14254438	**VKPC 85407**	
1.8	C18NZ - 1796 cc	86 → 93	|→Mot. 14254439	**VKPC 85409**	
2.0	20NE/C20NE - 1998 cc	86 → 93	→|Mot. 14608700	**VKPC 85407**	**VKMC 05401**
2.0	20NE/C20NE - 1998 cc	86 → 93	|→Mot. 14608701	**VKPC 85409**	
2.0	20SEH/20SER - 1998 cc	86 → 93	→|Mot. 14608700	**VKPC 85407**	**VKMC 05401**
2.0	20SEH/20SER - 1998 cc	86 → 93	|→Mot. 14608701	**VKPC 85409**	
2.0 16V	20XE/C20XE - 1998 cc	88 → 93	→|Mot. 14142838	**VKPC 85610**	
2.0 16V	20XE/C20XE - 1998 cc	88 → 93	|→Mot. 14142839	**VKPC 85611**	
1.6 DIESEL	16D/16DA - 1598 cc	07/84 → 93	Man.GBX, →|Mot. 14478630	**VKPC 85406**	VKMC 05200
1.6 DIESEL	16D/16DA - 1598 cc	07/84 → 93	Man.GBX, |→Mot. 14478631	**VKPC 85408**	**VKMC 05201**
1.6 DIESEL	16D/16DA - 1598 cc	07/84 → 93	Auto.GBX, →|Mot. 14503756	**VKPC 85406**	VKMC 05200
1.6 DIESEL	16D/16DA - 1598 cc	07/84 → 93	Auto.GBX, |→Mot. 14503757	**VKPC 85408**	**VKMC 05201**
1.7 DIESEL	17D/17DR - 1699 cc	07/84 → 93	→|Mot. 14363649	**VKPC 85408**	**VKMC 05201**
1.7 DIESEL	17D/17DR - 1699 cc	07/84 → 93	|→Mot. 14363650	**VKPC 85611**	
1.5 TURBO DIESEL	15TD - 1488 cc	07/84 → 93	→|Mot. 817252	**VKPC 85403**	
1.5 TURBO DIESEL	15TD - 1488 cc	07/84 → 93	|→Mot. 817253	**VKPC 85410**	
1.7 TURBO DIESEL	17TD - 1699 cc	07/84 → 93		**VKPC 85404**	

KAPITAEN

2.8	28S - 2784 cc	65 → 69		**VKPC 85600**	

MANTA A

1.2	12S - 1196 cc	72 → 75	OHV	VKPC 85200	
1.6	16S/16N (C1H) - 1584 cc	70 → 75		**VKPC 85600**	
1.9	19S - 1897 cc	70 → 75		**VKPC 85600**	

MANTA B

1.2	12N/12S - 1196 cc	76 → 79	OHV	**VKPC 85203**	
1.3	13N/13S - 1297 cc	79 → 82		**VKPC 85202**	**VKMC 05103**
1.6	16 - 1584 cc	08/75 → 08/81	~~CH~~	**VKPC 85600**	
1.6	16S - 1584 cc	08/75 → 08/81	CH, →|Mot. 570624	**VKPC 85600**	
1.8	18S - 1796 cc	82 → 87		**VKPC 85400**	**VKMC 05400**
1.9	19 - 1897 cc	76 → 81		**VKPC 85600**	
2.0	20S/20E - 1979 cc	77 → 88	~~CH~~, →|CH 6067585	**VKPC 85600**	
2.0	20S/20E - 1979 cc	77 → 88	~~CH~~, |→CH 6067586		**VKPA 85608**

www.bergab.ru Берг АБ bergab@ya.ru Тел. (495)-228-06-21, факс (495) 223-3071

www.bergab.ru Берг АБ bergab@ya.ru Тел. (495)-228-06-21, факс (495) 223-3071

2.0	20S - 1979 cc	79 → 08/81	(CH), →|Mot. 102685		**VKPA 85605**
MONTEREY (M92 & M98)					
3.5	35 - 3500 cc	98 →			VKPA 85609
3.0 TURBO DIESEL	30TD - 3000 cc	98 →			VKPA 85609
3.1 TURBO DIESEL	31TD - 3100 cc	92 → 08/93			**VKPA 85605**
MONZA					
2.0	20E - 1979 cc	83 → 84	AC		**VKPA 85608**
2.2	22E - 2197 cc	84 → 86	AC		**VKPA 85608**
2.5	25E - 2490 cc	81 → 86		**VKPC 85600**	
2.8	28H - 2784 cc	78 → 82		**VKPC 85600**	
3.0	30/30NE/C30NE/C30LE - 2968 cc	→ 09/87		**VKPC 85600**	
OMEGA A (V87)					
1.8 i.e	18NV/18SV/18SEH/E18NVR - 1796 cc	87 → 92	→|Mot. 14270600	**VKPC 85407**	**VKMC 05401**
1.8 i.e	18NV/18SV/18SEH/E18NVR - 1796 cc	93 → 94	|→Mot. 14270601	**VKPC 85409**	
2.0 i.e	20SE/C20NE/X20SE - 1998 cc	87 → 92	→|Mot. 14608700	**VKPC 85407**	**VKMC 05401**
2.0 i.e	20SE/C20NE/X20SE - 1998 cc	83 → 94	|→Mot. 14608701	**VKPC 85409**	
2.4 i.e	C24NE - 2410 cc	87 → 94		**VKPC 85603**	
3.0	C30LE - 2968 cc	87 → 94		**VKPC 85603**	
3.0	30NE/C30NE - 2968 cc	87 → 94	→|Mot. L1999999	**VKPC 85603**	
2.3 DIESEL	23YD - 2260 cc	87 → 94		**VKPC 85603**	
2.3 TURBO DIESEL	23YDT/23YDTR - 2260 cc	87 → 94		**VKPC 85603**	
OMEGA B (V94)					
2.0	20SE/X20SE - 1998 cc	94 →		**VKPC 85409**	
2.0 i.e 16V	X20XEV - 1998 cc	94 →		**VKPC 85611**	
2.5	X25XE - 2498 cc	94 →		**VKPC 85613**	
3.0 24V	X30XE - 2969 cc	94 →		**VKPC 85613**	
2.0 16V DTI	X20DTL/X20DTH - 1995 cc	97 →		**VKPC 85623**	
2.2 16V DTi	Y22DTH - 2172 cc	09/00 →		**VKPC 85623**	
2.5 TURBO DIESEL	U25TD/X25TD - 2499 cc	94 →		**VKPC 88826**	
2.5 24V DTI	Y25TD - 2497 cc	02 →		**VKPC 88826**	
REKORD D					
1.7	17N - 1698 cc	64 → 02/78		**VKPC 85600**	
1.9	19N - 1897 cc	64 → 02/78		**VKPC 85600**	
2.0	20N - 1979 cc	64 → 02/78		**VKPC 85600**	
2.1 DIESEL	21D - 2068 cc	64 → 02/78			**VKPA 85605**
REKORD E					
1.7	17N - 1698 cc	78 → 82	→|Mot. 442155, AC	**VKPC 85600**	
1.7	17N - 1698 cc	83 →	|→Mot. 442156, AC		**VKPA 85608**
1.8	18N/18S/C18NV - 1796 cc	82 → 86		**VKPC 85400**	**VKMC 05400**
1.9	19N - 1897 cc	78 → 82	→|Mot. 545154, AC	**VKPC 85600**	
1.9	19N - 1897 cc	83 →	|→Mot. 545155, AC		**VKPA 85608**
2.0	20N - 1979 cc	78 → 82	→|Mot. 197858, AC	**VKPC 85600**	
2.0	20N - 1979 cc	83 →	|→Mot. 197859, AC		**VKPA 85608**
2.0	20S - 1979 cc	78 → 82	→|Mot. 665090, AC	**VKPC 85600**	
2.0	20S - 1979 cc	83 →	|→Mot. 665091, AC		**VKPA 85608**
2.0	20E - 1979 cc	78 → 82	→|Mot. 172888, AC	**VKPC 85600**	
2.0	20E - 1979 cc	83 →	|→Mot. 172889, AC		**VKPA 85608**
2.0 DIESEL	20D - 1998 cc	77 → 78	→|Mot. 102685, AC		**VKPA 85605**
2.3 DIESEL	23D - 2260 cc	78 → 86	→|Mot. 55082, AC		**VKPA 85605**
2.3 DIESEL	23D - 2260 cc	78 → 82	|→Mot. 0121527, AC		VKPA 85609

www.bergab.ru Берг АБ bergab@ya.ru Тел. (495)-228-06-21, факс (495) 223-3071

www.bergab.ru Берг АБ bergab@ya.ru Тел. (495)-228-06-21, факс (495) 223-3071

OPEL .../...

2.3 TURBO DIESEL	23TD - 2260 cc	84 → 86			VKPA 85609

SENATOR

2.0	20E - 1979 cc	79 → 84	~~AC~~		**VKPA 85608**
2.2	22E - 2197 cc	84 → 86	~~AC~~		**VKPA 85608**
2.5	25E/25NE - 2490 cc	→ 87		**VKPC 85600**	
2.5	25E/25NE - 2490 cc	88 →		**VKPC 85603**	
2.8	28H - 2784 cc	79 → 82		**VKPC 85600**	
3.0	30NE/C30NE - 2968 cc	→ 87		**VKPC 85600**	
3.0	30NE/C30NE - 2968 cc	88 →		**VKPC 85603**	
3.0	C30LE - 2968 cc	88 →		**VKPC 85603**	
2.3 TURBO DIESEL	23TD - 2260 cc	→ 87	~~Comp.~~		VKPA 85609

SINTRA (APV)

2.2	X22XE - 2198 cc	97 → 99		**VKPC 85611**	
3.0	X30XE - 2969 cc	97 → 99		**VKPC 85613**	
2.2 16V DTi	X22DTH - 2198 cc	97 →		**VKPC 85623**	

TIGRA (S93)

1.0i 12V	X10XE - 993 cc	97 →		**VKPC 85220**	
1.2	X12SZ/12NZ/C12NZ - 1196 cc	93 →		**VKPC 85206**	**VKMC 05100**
1.2i 16V	X12XE - 1199 cc	98 →		**VKPC 85220**	
1.4	C14NZ/X14SZ/C14SE - 1398 cc	93 →		**VKPC 85206**	
1.4	X14XE/C14SEL - 1388 cc	93 →		**VKPC 85211**	
1.6	C16LZ/C16SEL/C16XE/X16XE - 1598 cc	93 →		**VKPC 85211**	
1.5 DIESEL	X15D/15D - 1488 cc	93 →	→|Mot. 877697	**VKPC 85410**	
1.5 DIESEL	X15D/15D - 1488 cc	93 →	|→Mot. 877698	**VKPC 85621**	
1.5 TURBO DIESEL	X15TD/15TD - 1488 cc	93 →	→|Mot. 877697	**VKPC 85410**	
1.5 TURBO DIESEL	X15D/15D - 1488 cc	93 →	|→Mot. 877696, →|Mot. 00076350	**VKPC 85621**	
1.5 TURBO DIESEL	X15TD/15TD - 1488 cc	93 →	|→Mot. 00076351	**VKPC 85622**	
1.7 DIESEL	17D/X17D - 1699 cc	93 →	→|Mot. 00877697	**VKPC 85404**	
1.7 DIESEL	17D/X17D - 1699 cc	94 →	|→Mot. 00877698	**VKPC 85620**	

VECTRA A (J89)

1.4	14NV - 1398 cc	09/88 → 08/91		**VKPC 85401**	**VKMC 05120**
1.4	14NV - 1398 cc	09/91 → 11/95		**VKPC 85206**	**VKMC 05121**
1.6	16SV/C16NZ/E16NZ - 1598 cc	09/88 → 08/91		**VKPC 85401**	**VKMC 05120**
1.6	16SV/C16NZ/E16NZ - 1598 cc	09/91 → 11/95		**VKPC 85206**	**VKMC 05121**
1.6	X16SZ - 1598 cc	09/91 → 11/95		**VKPC 85206**	
1.6	C16LZ2/C16NZ2 - 1598 cc	09/88 → 11/95		**VKPC 85409**	
1.8	E18NVR/C18NZ/18SV - 1796 cc	10/88 → 92		**VKPC 85407**	**VKMC 05401**
1.8	E18NVR/C18NZ/18SV - 1796 cc	93 → 11/95		**VKPC 85409**	
2.0	20SEH/20NE/C20NE - 1998 cc	10/88 → 92		**VKPC 85407**	**VKMC 05401**
2.0	20SEH/20NE/C20NE - 1998 cc	93 → 11/95		**VKPC 85409**	
2.0 16V	20XE/C20XE/C20LET/X20XEV - 1998 cc	89 → 02/93		**VKPC 85610**	
2.0 16V	20XE/C20XE/C20LET/X20XEV - 1998 cc	02/93 → 11/95		**VKPC 85611**	
2.5	C25XE - 2498 cc	89 → 11/95		**VKPC 85613**	
1.7 DIESEL	17D/17DR - 1699 cc	89 → 11/95	→|Mot. 14363651	**VKPC 85408**	**VKMC 05201**
1.7 DIESEL	17D/17DR - 1699 cc	89 → 11/95	|→Mot. 14363652	**VKPC 85611**	
1.7 TURBO DIESEL	17TD/TC4EE1 - 1699 cc	89 → 11/95	→|Mot. 877696	**VKPC 85404**	
1.7 TURBO DIESEL	17TD - 1699 cc	89 → 11/95	|→Mot. 877697	**VKPC 85620**	

VECTRA B (J96)

1.6	16LZ2 - 1598 cc	11/95 →		**VKPC 85409**	
1.6	X16SZR - 1598 cc	11/95 →		**VKPC 85206**	

www.bergab.ru Берг АБ bergab@ya.ru Тел. (495)-228-06-21, факс (495) 223-3071

www.bergab.ru Берг АБ bergab@ya.ru Тел. (495)-228-06-21, факс (495) 223-3071

1.6	X16XEL - 1598 cc	11/95 →		VKPC 85211	
1.8	X18XE - 1796 cc	11/95 →		VKPC 85611	
1.8 16V	X18XE1 - 1796 cc	11/95 →		VKPC 85624	
2.0	C20SEL/X20XEV - 1998 cc	11/95 →		VKPC 85611	
2.0	20NEJ - 1998 cc	11/95 →		VKPC 85409	
2.2	C22SEL - 2198 cc	11/95 →		VKPC 85611	
2.5	C25XE/X25XE - 2498 cc	11/95 →		VKPC 85613	
1.7 TURBO DIESEL	X17TD - 1699 cc	11/95 →		VKPC 85620	
2.0 16V DTI	X20DTL/X20DTH - 1995 cc	11/95 →		VKPC 85623	
VECTRA C					
1.8 16V	ZX18E/ZX18XEL - 1796 cc	04/02 →		VKPC 85624	
2.0 16V DTI	Y20DTH - 1995 cc	04/02 →		VKPC 85623	
2.2 16V DTI	Y22DTR - 2172 cc	04/02 →		VKPC 85623	
ZAFIRA (T98)					
1.6	X16SZR - 1598 cc	98 →		VKPC 85206	
1.6 16V	C16SEL/X16XEL - 1598 cc	05/99 →		VKPC 85211	
1.8 16V	X18XE1 - 1796 cc	05/99 →		VKPC 85624	
2.0 16V DTI	X20DTL/Y20DTH - 1995 cc	05/99 →		VKPC 85623	
2.2 16V DTI	Y22DTR - 2172 cc	01/02 →		VKPC 85623	

PEUGEOT

PEUGEOT 104					
1.0	XV - 954 cc	72 → 78		VKPC 83200	VKPA 83200
1.1	XW - 1124 cc	75 → 88		VKPC 83200	VKPA 83200
1.2	XZ - 1219 cc	79 → 82		VKPC 83200	VKPA 83200
1.4	XY - 1360 cc	79 → 88		VKPC 83200	VKPA 83200
106					
1.0	TU9 - 954 cc	09/91 →		VKPC 83205	
1.1	TU1 - 1124 cc	09/91 →		VKPC 83205	
1.3	TU2 - 1294 cc	09/91 →		VKPC 83205	
1.4	TU3/3M/3FM - 1360 cc	09/91 →		VKPC 83205	
1.4	TU3J2Z - 1360 cc	09/91 →		VKPC 83428	
1.6 ie	TU5JP/TU5JP2 - 1587 cc	09/91 →		VKPC 83428	
1.6 16V	TU5JP4 - 1587 cc	02/96 →		VKPC 83430	
1.4 DIESEL	TUD3 - 1360 cc	92 → 06/94		VKPC 83205	
1.5 DIESEL	TUD5 - 1527 cc	95 →		VKPC 83428	
204					
1.1	XK4/XK5 - 1127 cc	70 → 81	Auto.FAN	VKPC 83203	
1.2 DIESEL	XLD - 1225 cc	70 → 81	Auto.FAN	VKPC 83203	
1.4 DIESEL	XL4D - 1357 cc	70 → 81	Auto.FAN	VKPC 83203	
205					
1.0	XV - 954 cc	83 → 88		VKPC 83200	
1.0	TU9 - 954 cc	88 →		VKPC 83205	
1.1	XW - 1124 cc	83 → 88		VKPC 83200	
1.1	TU1 - 1124 cc	88 →		VKPC 83205	
1.1	E1 - 1118 cc	83 → 88		VKPC 83206	
1.1	F1 - 1124 cc	83 → 88		VKPC 83206	
1.3	G1 - 1294 cc	83 → 88		VKPC 83206	
1.3	TU24 - 1294 cc	88 → 92		VKPC 83205	
1.4	XY - 1360 cc	83 → 88		VKPC 83200	
1.4	TU3 - 1360 cc	88 →		VKPC 83205	
1.4	TU3FJ - 1360 cc	09/91 →		VKPC 83428	
1.4	J2 - 1360 cc	83 → 89		VKPC 83206	

www.bergab.ru Берг АБ bergab@ya.ru Тел. (495)-228-06-21, факс (495) 223-3071

PEUGEOT .../...

1.6	XU5 - 1580 cc	84 → 01/92		VKPC 83401
1.6	XU5 - 1580 cc	01/92 →		VKPC 83615
1.9	XU9 - 1905 cc	88 → 01/92		VKPC 83401
1.9	XU9 - 1905 cc	01/92 →		VKPC 83615
1.8 DIESEL	XUD7 - 1769 cc	→ 10/86		VKPC 83401
1.8 DIESEL	XUD7 - 1769 cc	10/86 → 01/94		VKPC 83424
1.8 DIESEL	XUD7 - 1769 cc	01/94 →		VKPC 83420
1.8 TURBO DIESEL	XUD7T - 1769 cc	91 → 01/94		VKPC 83424
1.8 TURBO DIESEL	XUD7T - 1769 cc	01/94 →		VKPC 83420
1.9 DIESEL	XUD9 - 1905 cc	→ 10/86		VKPC 83401
1.9 DIESEL	XUD9 - 1905 cc	10/86 → 01/94		VKPC 83424
1.9 DIESEL	XUD9 - 1905 cc	01/94 →		VKPC 83420

206

1.1	TU1JP - 1124 cc	09/98 → 08/99		VKPC 83205
1.1	TU1JP - 1124 cc	09/99 →		VKPC 83205
1.4	TU3JP - 1360 cc	09/98 →		VKPC 83205
1.6	TU5JP - 1587 cc	09/98 → 10/99		VKPC 83428
1.6	TU5JP - 1587 cc	11/99 →		VKPC 83428
1.6 16V	TU5JP4 - 1587 cc	98 →		VKPC 83430
1.8 DIESEL	DW8 - 1868 cc	98 →		VKPC 83639
2.0 Hdi TURBO DIESEL	DW10TD - 1997 cc	98 →		VKPC 83639

304

1.1	XK5 - 1127 cc	70 → 81	Auto.FAN	VKPC 83203
1.3	XL - 1290 cc	70 → 81	Auto.FAN	VKPC 83203
1.4 DIESEL	XL4D - 1357 cc	70 → 81	Auto.FAN	VKPC 83203
1.5 DIESEL	XDIL - 1548 cc	70 → 81	Auto.FAN	VKPC 83203

305

1.1	XK5 - 1127 cc	77 → 87	Auto.FAN	VKPC 83203
1.3	XL5 - 1290 cc	77 → 87	Auto.FAN	VKPC 83203
1.5	XR5 - 1472 cc	77 → 87	Auto.FAN	VKPC 83203
1.6	XU5 - 1580 cc	→ 09/86		VKPC 83401
1.6	XU5 - 1580 cc	09/86 → 88		VKPC 83424
1.9	XU9 - 1905 cc	→ 09/86		VKPC 83401
1.9	XU9 - 1905 cc	09/86 → 88		VKPC 83424
1.5 DIESEL	XID - 1548 cc	80 → 83	Auto.FAN	VKPC 83203
1.8 DIESEL	XUD7 - 1769 cc	→ 09/86		VKPC 83401
1.8 DIESEL	XUD7 - 1769 cc	10/86 → 01/94		VKPC 83424
1.9 DIESEL	XUD9 - 1905 cc	→ 09/86		VKPC 83401
1.9 DIESEL	XUD9 - 1905 cc	10/86 → 01/94		VKPC 83424

306

1.1i	TU1M - 1124 cc	03/93 →		VKPC 83205
1.4i	TU3 - 1360 cc	03/93 →		VKPC 83205
1.6i	TU5JP - 1587 cc	03/93 →		VKPC 83428
1.8i	XU7JP - 1761 cc	03/93 →		VKPC 83615
1.8i	XU7JP4 - 1761 cc	96 →		VKPC 83635
2.0i	XU10J2 - 1998 cc	03/93 →		VKPC 83420
2.0i	XU10J4 - 1998 cc	03/93 →		VKPC 83420
2.0i 16V	XU10J4RS - 1998 cc	03/93 →		VKPC 83636
1.8 DIESEL	XUD7 - 1796 cc	03/93 → 01/94		VKPC 83424
1.8 DIESEL	XUD7 - 1796 cc	01/94 →		VKPC 83420
1.8 DIESEL	DW8 - 1868 cc	98 →		VKPC 83639
1.9 DIESEL	XUD9 - 1905 cc	03/93 → 01/94		VKPC 83424
1.9 DIESEL	XUD9 - 1905 cc	01/94 →		VKPC 83420
1.9 TURBO DIESEL	XUD9TE - 1905 cc	03/93 → 01/94		VKPC 83424
1.9 TURBO DIESEL	XUD9TE - 1905 cc	01/94 →		VKPC 83420

www.bergab.ru Берг АБ bergab@ya.ru Тел. (495)-228-06-21, факс (495) 223-3071

2.0 HDI TURBO DIESEL	DW10TD - 1997 cc	99 →		VKPC 83639

307

1.4	TU3JP - 1360 cc	01 →		VKPC 83205
1.6 16V	TU5JP4 - 1587 cc	01 →		VKPC 83430
2.0 HDI TURBO DIESEL	DW10TD/DW10ATED - 1997 cc	01 →		VKPC 83639

309

1.1	E1 - 1118 cc	86 → 90		VKPC 83206
1.1	TU1 - 1124 cc	09/89 → 07/93	Alu.	VKPC 83205
1.1	TU1 - 1124 cc	09/89 → 07/93	Cast.	VKPC 83428
1.3	G1/G2 - 1294 cc	86 → 90		VKPC 83206
1.4	J2 - 1360 cc	86 → 90		VKPC 83206
1.4	TU3 - 1360 cc	86 → 07/93		VKPC 83205
1.4	Y2 - 1442 cc	86 → 90		VKPC 83206
1.4	TU3F - 1360 cc	09/91 →		VKPC 83428
1.6	XU5 - 1580 cc	86 → 12/91		VKPC 83401
1.6	XU5 - 1580 cc	01/92 → 07/93		VKPC 83615
1.9	XU9J -1905 cc	86 → 07/93		VKPC 83401
1.9 GTi 16V	XU9J4 - 1905 cc	88 → 07/93		VKPC 83615
1.8 DIESEL	XUD7 - 1769 cc	→ 10/86		VKPC 83401
1.8 DIESEL	XUD7 - 1769 cc	11/86 → 07/93		VKPC 83424
1.8 TURBO DIESEL	XUD7T - 1769 cc	09/89 → 07/93		VKPC 83424
1.9 DIESEL	XUD9 - 1905 cc	→ 10/86		VKPC 83401
1.9 DIESEL	XUD9 - 1905 cc	11/86 → 07/93		VKPC 83424

404

1.5/1.6/1.8	XB/XC - 1468/1618/1796 cc	60 → 75	Auto.FAN, THW	VKPC 83612

405

1.4	TU3 - 1360 cc	87 → 92		VKPC 83205
1.4	TU3/TU3A/TU3F - 1360 cc	93 →		VKPC 83428
1.6	XU5 - 1580 cc	87 → 01/92		VKPC 83401
1.6	XU5 - 1580 cc	01/92 →		VKPC 83615
1.8	XU7JP - 1761 cc	07/92 →		VKPC 83615
1.9	XU9 - 1905 cc	87 → 01/92		VKPC 83401
1.9	XU9 - 1905 cc	01/92 →		VKPC 83615
1.9	XU9J4 - 1905 cc	87 → 92		VKPC 83615
2.0	XU10J - 1998 cc	07/92 →		VKPC 83420
1.8 DIESEL	XUD7 - 1769 cc	03/88 → 01/94		VKPC 83424
1.8 DIESEL	XUD7 - 1769 cc	01/94 →		VKPC 83420
1.8 TURBO DIESEL	XUD7TE - 1769 cc	03/88 → 01/94		VKPC 83424
1.8 TURBO DIESEL	XUD7TE - 1769 cc	01/94 →		VKPC 83420
1.9 DIESEL	XUD9 - 1905 cc	03/88 → 01/94		VKPC 83424
1.9 DIESEL	XUD9 - 1905 cc	01/94 →		VKPC 83420
1.9 TURBO DIESEL	XUD9TE - 1905 cc	07/92 → 01/94		VKPC 83424
1.9 TURBO DIESEL	XUD9TE - 1905 cc	01/94 →		VKPC 83420

406

1.6i	XU5JP - 1580 cc	10/95 →		VKPC 83615
1.8i	XU7JP - 1761 cc	10/95 →		VKPC 83615
1.8i	XU7JB - 1761 cc	10/95 →		VKPC 83615
1.8i 16V	XU7JP4 - 1761 cc	10/95 →		VKPC 83635
2.0i 16V	XU10J4RS - 1998 cc	10/95 →		VKPC 83636
2.0i TURBO	XU10J2TE - 1998 cc	10/95 →		VKPC 83420
3.0 24V	ES9J4 - 2946 cc	97 →		VKPC 83637
1.9 DIESEL	XUD9 - 1905 cc	10/95 →		VKPC 83420
1.9 TURBO DIESEL	XUD9TE - 1905 cc	10/95 →		VKPC 83420
2.0 HDI TURBO DIESEL	DW10TD/DW10ATED - 1997 cc	99 →		VKPC 83639
2.1 TURBO DIESEL	XUD11BTE - 2088 cc	10/95 →		VKPC 83425

www.bergab.ru Берг АБ bergab@ya.ru Тел. (495)-228-06-21, факс (495) 223-3071

www.bergab.ru Берг АБ bergab@ya.ru Тел. (495)-228-06-21, факс (495) 223-3071

PEUGEOT .../...

504

1.6	XC7 - 1618 cc	→ 82	Auto.FAN, ~~THT~~	**VKPC 83612**
1.6	XC7 - 1618 cc	→ 82	Auto.FAN, THT	**VKPC 83618**
1.6	XC7 - 1618 cc	→ 82	Fix.FAN, THT	**VKPC 83403**
1.8	XM/KF - 1796 cc	→ 82	Auto.FAN, ~~THT~~	**VKPC 83612**
1.8	XM/KF - 1796 cc	→ 82	Auto.FAN, THT	**VKPC 83618**
1.8	XM/KF - 1796 cc	→ 82	Fix.FAN, THT	**VKPC 83403**
2.0	XN - 1971 cc	→ 82	Auto.FAN, ~~THT~~	**VKPC 83612**
2.0	XN - 1971 cc	→ 82	Auto.FAN, THT	**VKPC 83618**
2.0	XN - 1971 cc	→ 82	Fix.FAN, THT	**VKPC 83403**
1.9 DIESEL	XD88 - 1948 cc	→ 77		VKPC 83614
1.9 DIESEL	XD88 - 1948 cc	77 → 82		**VKPC 83616**
2.1 DIESEL	XD90 - 2112 cc	→ 77		VKPC 83614
2.1 DIESEL	XD90 - 2112 cc	77 → 82		**VKPC 83616**
2.3 DIESEL	XD2 - 2304 cc	76 → 80		**VKPC 83605**

505

1.6	XC7 - 1618 cc	79 → 87	Fix.FAN	**VKPC 83403**
1.6	XC7 - 1618 cc	79 → 87	Auto.FAN	**VKPC 83618**
1.8	XM - 1796 cc	79 → 87	Fix.FAN	**VKPC 83403**
1.8	XM - 1796 cc	79 → 87	Auto.FAN	**VKPC 83618**
2.0	XN - 1971 cc	79 → 87	Fix.FAN	**VKPC 83403**
2.0	XN - 1971 cc	79 → 87	Auto.FAN	**VKPC 83618**
2.0	XN6 - 1971 cc	79 → 87		**VKPC 83618**
2.0	ZEJ - 1995 cc	79 → 87	Fix.FAN	**VKPC 83625**
2.0	ZEJ - 1995 cc	79 → 87	Auto.FAN	**VKPC 83624**
2.2	ZDJ - 2165 cc	79 → 87	Fix.FAN	**VKPC 83625**
2.2	ZDJ - 2165 cc	79 → 87	Auto.FAN	**VKPC 83624**
2.2 TURBO	N9T - 2155 cc	79 → 87		VKPC 83411
2.3 DIESEL	XD2 - 2304 cc	80 → 83		**VKPC 83605**
2.3 TURBO DIESEL	XD2S - 2304 cc	80 → 83		**VKPC 83603**
2.3 TURBO DIESEL	XD2S - 2304 cc	83 → 87		**VKPC 83604**
2.5 DIESEL	XD3 - 2498 cc	82 → 87		**VKPC 83423**
2.5 TURBO DIESEL	XD3T - 2498 cc	83 → 87		**VKPC 83604**

604

2.0	XN6 - 1971 cc	81 → 85		**VKPC 83603**
2.5 TURBO DIESEL	XD3T - 2498 cc	84 → 86		**VKPC 83604**

605

2.0i	XU10 - 1998 cc	90 → 99		**VKPC 83420**
2.0i 16V	XU10J4RS - 1998 cc	95 → 99		**VKPC 83636**
2.0i TURBO	XU10J2TE - 1998 cc	90 → 99		**VKPC 83420**
2.1 DIESEL	XUD11A - 2138 cc	90 → 99		**VKPC 83420**
2.1 TURBO DIESEL	XUD11ATE - 2088 cc	90 → 99		**VKPC 83425**
2.5 TURBO DIESEL	DK5ATE - 2446 cc	07/94 →		**VKPC 83810**

607

2.0 HDI TURBO DIESEL	DW10ATED - 1997 cc	01 →		**VKPC 83639**

806

1.8i	XU7JP - 1761 cc	07/94 →		**VKPC 83615**
2.0i	XU10J2 - 1998 cc	07/94 →		**VKPC 83420**
2.0i 16V	XU10J4R - 1998 cc	07/94 →		**VKPC 83636**
2.0i TURBO	XU10J2TE - 1998 cc	07/94 →		**VKPC 83420**
1.9 TURBO DIESEL	XUD9TE - 1905 cc	07/94 →		**VKPC 83420**
2.0 HDI TURBO DIESEL	DW10ATED - 1997 cc	00 →		**VKPC 83639**

www.bergab.ru Берг АБ bergab@ya.ru Тел. (495)-228-06-21, факс (495) 223-3071

www.bergab.ru Берг АБ bergab@ya.ru Тел. (495)-228-06-21, факс (495) 223-3071

2.1 TURBO DIESEL	XUD11BTE - 2088 cc	07/94 →		**VKPC 83425**	

807

2.0 HDI TURBO DIESEL	DW10ATED - 1997 cc	06/02 →		**VKPC 83639**	

PEUGEOT COMMERCIAL

BOXER

2.0i	XU10J2 - 1998 cc	95 →		**VKPC 83420**	
1.9 DIESEL	XUD9 - 1905 cc	95 →		**VKPC 83420**	
1.9 TURBO DIESEL	XUD9TE - 1905 cc	95 →		**VKPC 83420**	
2.0 HDI TURBO DIESEL	DW10TD - 1997 cc	04/02 →		**VKPC 83639**	
2.5 DIESEL	DJ5 - 2445 cc	02/94 → 05/96		**VKPC 83810**	
2.5 DIESEL	DJ5 - 2445 cc	06/96 →		**VKPC 83811**	
2.5 DIESEL	DIESEL SOFIM 2500 - 2500 cc	99 →		**VKPC 82652**	
2.5 TURBO DIESEL	DJ5T - 2445 cc	02/94 → 05/96		**VKPC 83810**	
2.5 TURBO DIESEL	DJ5T - 2445 cc	06/96 →		**VKPC 83811**	
2.5 TDI	DJ5TED - 2445 cc	01/97 →		**VKPC 83811**	
2.8 DIESEL	DIESEL SOFIM 2800 - 2800 cc	99 →		**VKPC 82652**	
2.8 HDI	DIESEL SOFIM 2800 HDI - 2800 cc	11/00 →		**VKPC 82652**	
2.8 TURBO DIESEL	DIESEL SOFIM 2800 TD - 2800 cc	99 →		**VKPC 82652**	

EXPERT

1.6i	1580SPi - 1580 cc	95 →	⊘		**VKPA 83431**
1.6i	1580SPi - 1580 cc	95 →	⊘		**VKPA 83432**
1.8i	XU7JP - 1761 cc	95 →		**VKPC 83615**	
1.8 DIESEL	DW8/DW8B - 1868 cc	00 →		**VKPC 83639**	
1.9 DIESEL	XUD9 - 1905 cc	10/95 →		**VKPC 83420**	
1.9 TURBO DIESEL	XUD9TE - 1905 cc	10/95 →		**VKPC 83420**	
2.0 HDI TURBO DIESEL	DW10ATED/DW10ATED4/ DW10BTED/DW10CTED - 1997 cc	07/00 →		**VKPC 83639**	

J5

1.8	XM7T - 1796 cc	83 →		**VKPC 83630**	
2.0	XN1T - 1971 cc	83 →		**VKPC 83630**	
1.9 DIESEL	XUD9A - 1905 cc	87 → 01/94		**VKPC 83424**	
1.9 DIESEL	XUD9A - 1905 cc	01/94 →		**VKPC 83420**	
2.5 DIESEL	CRD93 / CRD93LS - 2498 cc	10/81 →		**VKPC 83617**	

J7

1.5	XB5 - 1468 cc	65 → 80	Auto.FAN	VKPC 83408	
1.5	XB5 - 1468 cc	65 → 80	Fix.FAN	VKPC 83409	
1.6	XC - 1618 cc	65 → 80	Auto.FAN	VKPC 83408	
1.6	XC - 1618 cc	65 → 80	Fix.FAN	VKPC 83409	
1.8	XM7 - 1796 cc	65 → 80	Auto.FAN	VKPC 83408	
1.8	XM7 - 1796 cc	65 → 80	Fix.FAN	VKPC 83409	
1.9 DIESEL	XDP88 - 1948 cc	77 → 80		**VKPC 83622**	
2.1 DIESEL	XDP90 - 2112 cc	77 → 80	Fix.FAN	**VKPC 83622**	
2.3 DIESEL	XD2P94 - 2304 cc	77 → 80		VKPC 83620	

J9

1.6	XC7P - 1618 cc	→ 80		VKPC 83408	
1.6	XC7P - 1618 cc	80 → 05/91		VKPC 83409	
2.0	XN1P - 1971 cc	80 → 05/91		VKPC 83408	
2.1 DIESEL	XDP4x90 - 2112 cc	80 → 05/91		**VKPC 83622**	
2.3 DIESEL	XD2Px94 - 2304 cc	80 → 83		VKPC 83620	
2.3 DIESEL	XD2Px94 - 2304 cc	83 → 05/91		**VKPC 83628**	

www.bergab.ru Берг АБ bergab@ya.ru Тел. (495)-228-06-21, факс (495) 223-3071

www.bergab.ru Берг АБ bergab@ya.ru Тел. (495)-228-06-21, факс (495) 223-3071

MITSUBISHI COMMERCIAL .../...

2.5 DIESEL	XD3P - 2498 cc	80 → 05/91	Fix.FAN	VKPC 83622	
2.5 DIESEL	XD3P - 2498 cc	80 → 05/91	Auto.FAN	VKPC 83628	

PARTNER

1.1i	TU1M - 1124 cc	07/96 → 01/00		VKPC 83205	
1.4i	TU3JP - 1360 cc	07/96 → 01/00		VKPC 83205	
1.6 16V	TU5JP4 - 1587 cc	99 →		VKPC 83430	
1.8i	XU7JB - 1761 cc	07/96 →		VKPC 83615	
1.8 DIESEL	XU7D - 1769 cc	07/96 →		VKPC 83420	
1.9 DIESEL	DW8/DW8B - 1868 cc	99 →		VKPC 83639	
1.9 DIESEL	XUD9 - 1905 cc	07/96 →		VKPC 83420	
2.0 HDI TURBO DIESEL	DW10TD - 1997 cc	99 →		VKPC 83639	

POLSKI

125 P

1.3	1300 cc	75 → 76	Auto.FAN	VKPC 82424	
1.5	AA - 1481 cc	75 → 76	Auto.FAN	VKPC 82424	

PORSCHE

924

2.0	XK - 1984 cc	→ 85		VKPC 81601	
2.0 TURBO	M31 - 1984 cc	→ 82		VKPC 81601	

PROTON

PERSONA

1.3 12V	4G-13 - 1298 cc	95 →		VKPC 95008	
1.5	G-15 - 1468 cc	11/93 →		VKPC 95008	
1.6i	4G-92 - 1597 cc	93 →		VKPC 95426	
1.8i	4G-93 - 1834 cc	96 →		VKPC 95426	
2.0 DIESEL / TURBO DIESEL	4D-68 - 1998 cc	96 →		VKPC 95614	

PROTON

1.3	4G-13 - 1298 cc	89 →		VKPC 95008	
1.5	G-15 - 1468 cc	89 →		VKPC 95008	

RENAULT

R4

0.8	680/690/800/839/BB1B - 782 / 845 cc	62 → 91		VKPC 86200	VKPA 86200
1.0 (R112C)	C1C-708 - 956 cc	83 → 90		VKPC 86205	
1.1 (R1128, R1129, R2370, R2430)	688 - 1108 cc	76 → 82		VKPC 86201	
1.1 (R1128, R1129, R2370, R2430, R210B, R239B, S128)	C1E-718/C1E-719 - 1108 cc	83 → 90		VKPC 86201	
1.1 (R1128, R2370, R2430)	C1E-714 - 1108 cc	83 → 90		VKPC 86205	

R5

0.8 (R1220, R1221, R1391, R2381)	839/01 - 782 cc / 800/810 - 845 cc	72 → 85		VKPC 86202	
1.0 (R1222, R1392, R2382)	689/10 - 956 cc	72 → 86		VKPC 86201	
1.0 (R1397)	689 - 956 cc	82 → 85		VKPC 86205	
1.1 (R1227, R1397, R2387)	688/13 - 1108 cc	80 → 86		VKPC 86201	

www.bergab.ru Берг АБ bergab@ya.ru Тел. (495)-228-06-21, факс (495) 223-3071

www.bergab.ru Берг АБ bergab@ya.ru Тел. (495)-228-06-21, факс (495) 223-3071

1.1 (R1123, R1227, R1245, R1256, R1397)	C1E/26 - 1108 cc	80 → 86		VKPC 86205	
1.3 (R1224, R1225, R1394, R1395, R1396)	810 - 1289 cc	74 → 86		VKPC 86201	
1.4 (R1229, R1399)	C2J - 1397 cc	82 → 85	⊘	VKPC 86201	
1.4 (R1229, R1399)	C2J - 1397 cc	82 → 85	⊘	VKPC 86206	
1.4 TURBO (R122B)	C6J/50 - 1397 cc	82 → 86	CH, ⊘	VKPC 86201	
1.4 TURBO (R122B)	C6J/28 - 1397 cc	80 → 86	CH, ⊘	VKPC 86205	
SUPER 5					
1.0 (B400, C400, S400)	C1C - 956 cc	08/84 → 90		VKPC 86206	VKPA 86206
1.0 (B400, C400, S400)	C1C - 956 cc	08/84 → 90	AC	VKPC 86209	
1.1 (B401, B40H, C401, C40H, S401)	C1E - 1108 cc	08/84 →		VKPC 86206	VKPA 86206
1.1 (B401, B40H, C401, C40H, S401)	C1E - 1108 cc	08/84 →	AC	VKPC 86209	
1.2 (B40F, C40F, S40F)	C1G - 1237 cc	08/84 →		VKPC 86206	VKPA 86206
1.2 (B40F, C40F, S40F)	C1G - 1237 cc	08/84 →	AC	VKPC 86209	
1.4 (B402, C402, C405)	C1J - 1397 cc	08/84 → 89		VKPC 86206	VKPA 86206
1.4 (B402, C402, C405)	C1J - 1397 cc	08/84 → 89	AC	VKPC 86209	
1.4 (B403, B40J, B40M, C403, C40J, C40M)	C2J - 1397 cc	08/84 → 89		VKPC 86206	VKPA 86206
1.4 (B403, B40J, B40M, C403, C40J, C40M)	C2J - 1397 cc	08/84 → 89	AC	VKPC 86209	
1.4 (B407, C407, S407)	C3J - 1397 cc	08/84 →		VKPC 86206	VKPA 86206
1.4 (B407, C407, S407)	C3J - 1397 cc	08/84 →	AC	VKPC 86209	
1.7 (B40G, B40K, C40G, C40K)	F2N - 1721 cc	08/84 → 92		VKPC 86413	
1.7 (B408, B409, C408, C409)	F3N - 1721 cc	08/84 → 89		VKPC 86413	
1.6 DIESEL (B404, C404, S404)	F8M - 1596 cc	08/84 → 03/96		VKPC 86413	
R6					
0.8 (R1180)	800 - 845 cc	69 → 80		VKPC 86200	VKPA 86200
1.1 (R1181)	688 - 1108 cc	70 → 80		VKPC 86201	
R8					
1.1 (R1132, R1136)	688 - 1108 cc	62 → 71		VKPC 86203	
R9					
1.1 (L421)	C1E - 1108 cc	81 → 89		VKPC 86206	VKPA 86206
1.2 (L42S)	C1G - 1237 cc	81 → 89		VKPC 86206	VKPA 86206
1.4 (L425)	C1J - 1397 cc	81 → 89		VKPC 86206	VKPA 86206
1.4 (L42A, L42C, L423)	C2J/C3J - 1397 cc	81 → 89		VKPC 86206	VKPA 86206
1.7 (L42D, L42L, L42N, L426)	F2N - 1721 cc	81 → 89		VKPC 86413	
1.7 (L42E, L42F)	F3N - 1721 cc	81 → 89		VKPC 86413	
1.6 DIESEL (L424)	F8M - 1596 cc	81 → 89		VKPC 86413	
R10					
1.1 (R1190)	688 - 1108 cc	65 → 71		VKPC 86203	
1.3 (R1192)	810 - 1289 cc	65 → 71		VKPC 86203	
R11					
1.1 (B371, S371)	C1E - 1108 cc	83 → 87		VKPC 86206	VKPA 86206
1.2 (B37S, C37S, S37S)	C1G - 1397 cc	85 → 87		VKPC 86206	VKPA 86206
1.4 (B372, B375, C372, C375)	C1J - 1397 cc	83 → 87		VKPC 86206	VKPA 86206
1.4 (B373, B37C, B37R, C373, C73C, C73R)	C2J - 1397 cc	83 → 87		VKPC 86206	VKPA 86206
1.4 (B37A, C37A)	C3J - 1397 cc	83 → 87		VKPC 86206	VKPA 86206
1.7 (C37N, C376, C37D)	F2N - 1721 cc	84 → 87		VKPC 86413	
1.7 (C37E, C37F)	F3N - 1721 cc	84 → 87		VKPC 86413	

www.bergab.ru Берг АБ bergab@ya.ru Тел. (495)-228-06-21, факс (495) 223-3071

www.bergab.ru Берг АБ bergab@ya.ru Тел. (495)-228-06-21, факс (495) 223-3071

RENAULT .../...

1.6 DIESEL (B374, C374, S374)	F8M - 1596 cc	84 → 87		**VKPC 86413**

R12

1.3 (R1170, R1177, R1179)	810 - 1289 cc	70 → 81		**VKPC 86403**
1.3 (R1173)	810 - 1289 cc	71 → 75		**VKPC 86403**
1.3 (R1330, R1337, R1339, R2360)	810 - 1289 cc	70 → 81		**VKPC 86403**
1.6 (R1172, R1174, R1178, R1331, R1332, R1334)	821 - 1565 cc	70 → 81		VKPC 86410
1.6 (R1172, R1174, R1178, R1331, R1332, R1334)	841/843 - 1647 cc	70 → 81		VKPC 86410

R14

1.2 (R1210)	129 - 1218 cc	76 → 83		**VKPC 83200**
1.3 (R1211)	145 - 1289 cc	79 → 83		**VKPC 83200**
1.4 (R1212, R1213)	X5J/150 - 1360 cc	80 → 83		**VKPC 83200**

R15

1.3 (R1300)	810 - 1289 cc	72 → 79		**VKPC 86403**

R16

1.6 (R1150, R1151, R1152, R1153)	807/821 - 1565 cc	→ 79		VKPC 86410
1.6 (R1154, R1157)	807 - 1565 cc	→ 79		VKPC 86410
1.6 (R1155, R1156)	841/843 - 1647 cc	→ 80		VKPC 86410

R18

1.4 (R1340)	847-20 - 1397 cc	78 → 84	~~Мод~~.R1340/268, Man.GBX	**VKPC 86401**
1.4 (R1340)	847-20 - 1397 cc	84 → 86	~~Мод~~.R1340/268, Man.GBX	**VKPC 86402**
1.4 (R1340)	847-21 - 1397 cc	78 → 86		**VKPC 86401**
1.4 (R1340, R1350/268)	847-94/C1J - 1397 cc	78 → 86	→|CH 12000	**VKPC 86401**
1.4 (R1340, R1350/268)	847-94/C1J - 1397 cc	78 → 86	|→CH 12001	**VKPC 86402**
1.4 (R1349)	847-22 - 1397 cc	78 → 86	→|CH 572	**VKPC 86401**
1.4 (R1349)	847-22 - 1397 cc	78 → 86	|→CH 573	**VKPC 86402**
1.4 (R1340, R1350)	847-20 - 1397 cc	78 → 84	~~Мод~~.R1350/268, →|CH 544000	**VKPC 86401**
1.4 (R1340, R1350)	847-20 - 1397 cc	78 → 84	~~Мод~~.R1350/268, |→CH 544001	**VKPC 86402**
1.4 (R2350)	847 - 1397 cc	83 → 86		**VKPC 86402**
1.6 (R1341, R1351)	A2M - 1565 cc	78 → 82		VKPC 86412
1.6 (R1341)	A2M - 1565 cc	83 → 86	Auto.GBX	**VKPC 86407**
1.6 (R1341, R1351)	A2M - 1565 cc	83 → 86	~~Мод~~.R1351/123/263, Man.GBX	**VKPC 86407**
1.6 TURBO (R1345)	807 - 1565 cc	78 → 82		VKPC 86412
1.6 TURBO (R1345, R1355)	A5L - 1565 cc	83 → 86		**VKPC 86407**
1.6 (R134A, R135A)	A7L - 1565 cc	83 → 86		**VKPC 86407**
1.6 (R1341, R1351/123/263)	841 - 1647 cc	78 → 82		VKPC 86412
1.6 (R1341, R1351/123/263)	841 - 1647 cc	83 → 86		**VKPC 86407**
1.6 (R1342, R1352)	A6M - 1647 cc	78 → 82		VKPC 86412
1.6 (R1342, R1352)	A6M - 1647 cc	83 → 86		**VKPC 86407**
2.0 (R1343, R1353)	J6R - 1995 cc	78 → 86		**VKPC 86602**
2.2 (R135B)	J7T - 2165 cc	83 → 86		**VKPC 86602**
2.1 DIESEL (R1344, R1354, R2354)	J8S/852 - 2068 cc	78 → 86		**VKPC 86602**
2.1 TURBO DIESEL (R1356)	J8S - 2068 cc	83 → 86		**VKPC 86602**

R19

1.2 (B53W, L53W)	E7F - 1171 cc	89 → 96		**VKPC 86409**

www.bergab.ru Берг АБ bergab@ya.ru Тел. (495)-228-06-21, факс (495) 223-3071

www.bergab.ru Берг АБ bergab@ya.ru Тел. (495)-228-06-21, факс (495) 223-3071

1.2 (B530, C530, L530, S530)	C1G - 1237 cc	89 → 92		VKPC 86206	VKPA 86206
1.4 (B531, C531, L531)	C1J - 1397 cc	89 → 92		VKPC 86206	VKPA 86206
1.4 (B532, C532, L532)	C3J - 1397 cc	89 → 92		VKPC 86206	VKPA 86206
1.4 (B53H, B53P, C53H, C53P, L53H, L53P)	C2J - 1397 cc	89 → 92		VKPC 86206	VKPA 86206
1.4 (B537, B53G, C537, S537, L537)	E6J - 1390 cc	89 → 96		VKPC 86409	
1.4 (B53A, C53A, L53A)	E7J - 1390 cc	89 → 96		VKPC 86409	
1.7 (B533, B53E, B53M, C533, C53E, C53M, L533)	F2N - 1721 cc	89 → 94		VKPC 86413	
1.7 (B53B, B53C, B53F, C53B, C53C, C53F, L53B, L53C, L53F)	F3N - 1721 cc	89 → 94		VKPC 86413	
1.7i (D53C)	F3N - 1721 cc	91 → 96		VKPC 86413	
1.8 (B538, B53V, B53Y, C538, C53Y, L538, L53Y)	F3P - 1794 cc	89 → 96		VKPC 86413	
1.8 (553A, 553C, 553D, 553F, 553H)	F3P - 1794 cc	89 → 96		VKPC 86413	
1.8 (D53V, 853A, 853C, 853F)	F3P - 1794 cc	91 → 96		VKPC 86413	
1.8 16V (B539, B53D, C539, C53D, L539, L53D)	F7P - 1764 cc	89 → 96		VKPC 86413	
1.8 16V (D53D, D53Y)	F7P - 1764 cc	91 → 96		VKPC 86413	
1.9 DIESEL (B534, B53I, B53J, B53T, B53Z, C534, C53I, C53J)	F8Q - 1870 cc	89 → 96		VKPC 86413	
1.9 DIESEL (L534, L53I, L53J, S534, S53J)	F8Q - 1870 cc	89 → 96		VKPC 86413	
1.9 TURBO DIESEL (B53K, B53T, C53K, C53T, L53K, L53T)	F8Q - 1870 cc	89 → 96		VKPC 86413	
R20					
2.0 (R1272, R1277)	829/J6R - 1995 cc	81 → 84		VKPC 86405	
2.2 (R1279)	851 - 2165 cc	81 → 84		VKPC 86405	
2.1 DIESEL (R1276)	852 - 2068 cc	80 → 84		VKPC 86623	
2.1 TURBO DIESEL (R1270)	J8S - 2068 cc	80 → 84		VKPC 86623	
R21					
1.4 (B48D, L48D)	C2J - 1397 cc	86 → 90	~~AC~~	VKPC 86206	VKPA 86206
1.4 (B48D, L48D)	C2J - 1397 cc	86 → 90	AC	VKPC 86209	
1.6 (B48U, K48U, L48U)	C2L - 1565 cc	86 → 93	~~AC~~	VKPC 86206	VKPA 86206
1.6 (B48U, K48U, L48U)	C2L - 1565 cc	86 → 93	AC	VKPC 86209	
1.7 (B481, K481, K48M, L481, L48M, S481)	F2N - 1721 cc	86 → 03/96		VKPC 86413	
1.7 (B482, K482, K48N, S482)	F2N - 1721 cc	86 → 03/96		VKPC 86413	
1.7 (B484, K484, L484)	F2N - 1721 cc	86 → 03/96		VKPC 86413	
1.7 (B48E, B48F, K48E, K48F, L48E, L48F)	F3N - 1721 cc	86 → 03/96		VKPC 86413	
2.0 (B48J, K48J)	F2R - 1965 cc	86 → 03/96		VKPC 86413	
2.0 (B483, K483, L483)	J7R - 1995 cc	86 →		VKPC 86603	
2.0 (B48C, B48R, L48C, L48Q, L48R, L48Y)	J7R - 1995 cc	86 → 04/93		VKPC 86603	
2.0 (K489, L489)	J6R - 1995 cc	86 →		VKPC 86408	
2.0 (K48C)	J7R - 1995 cc	86 →		VKPC 86603	
2.0 (L48L)	J7R-756 - 1995 cc	05/89 → 04/93		VKPC 86408	
2.0 TURBO (L485)	J7R-752 - 1995 cc	06/87 → 07/91	I→Mot. F00209863	VKPC 86408	
2.2 (K48B)	J7T - 2165 cc	06/86 → 06/90		VKPC 86603	
2.2 (B48K, K48K, L48K)	J7T - 2165 cc	86 →		VKPC 86603	
2.2 (K48S, L48S)	J6T - 2165 cc	06/88 → 04/89		VKPC 86408	
1.9 DIESEL (B48H, B48I, K48H, L48H, S48H)	F8Q - 1870 cc	86 → 03/96		VKPC 86413	
2.1 DIESEL (B486, B487, K486, L486, L487, S486)	J8S - 2068 cc	86 →		VKPC 86603	
2.1 TURBO DIESEL (L48A, L480, L48V, S48A, S480, S48V)	J8S - 2068 cc	86 →		VKPC 86603	
2.1 TURBO DIESEL (B48A, B480, B48V, K48A, K480, K48V)	J8S - 2068 cc	86 →		VKPC 86603	
2.1 TURBO DIESEL (B488, K488, L488)	J8S - 2068 cc	09/89 → 93		VKPC 86603	

www.bergab.ru Берг АБ bergab@ya.ru Тел. (495)-228-06-21, факс (495) 223-3071

www.bergab.ru Берг АБ bergab@ya.ru Тел. (495)-228-06-21, факс (495) 223-3071

RENAULT .../...

2.1 TURBO DIESEL (B48P, B48W, K48P, K48W, L48P, L48W)	J8S - 2068 cc	86 →		VKPC 86603	

R25

2.0 (B297)	J6R - 1995 cc	84 → 88		VKPC 86405	
2.0 (B297)	J6R-706 - 1995 cc	89 → 92	→|Mot. F308131	VKPC 86405	
2.0 (B297)	J6R-706 - 1995 cc	89 → 92	|→Mot. F308132	VKPC 86408	
2.0 (B297)	J6R-707 - 1995 cc	89 → 92	→|Mot. F308120	VKPC 86405	
2.0 (B297)	J6R-707 - 1995 cc	89 → 92	|→Mot. F308121	VKPC 86408	
2.0 (B297)	J6R-762 - 1995 cc	89 → 92	→|Mot. F308605	VKPC 86405	
2.0 (B297)	J6R-762 - 1995 cc	89 → 92	|→Mot. F308606	VKPC 86408	
2.0 (B297)	J6R-763 - 1995 cc	89 → 92	→|Mot. F308617	VKPC 86405	
2.0 (B297)	J6R-763 - 1995 cc	89 → 92	|→Mot. F308618	VKPC 86408	
2.0 (B29H)	J7R-722 - 1995 cc	89 → 92	Man.GBX, →|Mot. F241852	VKPC 86405	
2.0 (B29H, B292, B294)	J7R-722 - 1995 cc	89 → 92	|→Mot. F241853	VKPC 86603	
2.0 (B29H, B292, B294)	J7R-720/721/723/726 - 1995 cc	89 → 92		VKPC 86603	
2.2 (B29B, B29E)	J7T-730 - 2165 cc	84 → 88	→|Mot. F259593	VKPC 86405	
2.2 (B29B, B29E)	J7T-731 - 2165 cc	84 → 88	→|Mot. F259572	VKPC 86405	
2.2 (B29B, B29E)	J7T-732 - 2165 cc	84 → 88	→|Mot. F259468	VKPC 86405	
2.2 (B29B, B29E)	J7T-733 - 2165 cc	84 → 88	→|Mot. F259622	VKPC 86405	
2.2 (B29B, B29E)	J7T-730 - 2165 cc	89 → 92	|→Mot. F259594	VKPC 86603	
2.2 (B29B, B29E)	J7T-731 - 2165 cc	89 → 92	|→Mot. F259573	VKPC 86603	
2.2 (B29B, B29E)	J7T-732 - 2165 cc	89 → 92	|→Mot. F259469	VKPC 86603	
2.2 (B29B, B29E)	J7T-733 - 2165 cc	89 → 92	|→Mot. F259623	VKPC 86603	
2.1 DIESEL (B296)	J8S-706 - 2068 cc	84 → 91		VKPC 86623	
2.1 DIESEL (B296)	J8S-736 - 2068 cc	84 → 91		VKPC 86601	
2.1 TURBO DIESEL (B290)	J8S-708 - 2068 cc	84 → 91	→|Mot. N397289	VKPC 86622	
2.1 TURBO DIESEL (B290)	J8S-708 - 2068 cc	84 → 91	|→Mot. N397290	VKPC 86604	
2.1 TURBO DIESEL (B29W)	J8S - 2068 cc	89 → 90		VKPC 86604	

R30

2.1 DIESEL (R1270)	852 - 2068 cc	82 → 85		VKPC 86623	
2.1 TURBO DIESEL (R1270)	J8S-002/020 - 2068 cc	82 → 85		VKPC 86623	

CLIO

1.1 (B571, C571, S571)	C1E - 1108 cc	06/90 →		VKPC 86206	VKPA 86206
1.1 (357K, 557K, 657K)	DF7 - 1149 cc	96 → 10/97		VKPC 86215	
1.1 (BBOA, BBOF, CBOA, CBOF, SBOA)	DF7 - 1149 cc	10/97 →		VKPC 86215	
1.2 (B57A, B57R, B57S, C57A, C57R, C57S, S57A, S57R)	E7F - 1171 cc	06/90 →		VKPC 86409	
1.2 (357F, 357G, 357J, 557F, 557G, 557J, 557L)	E7F - 1171 cc	06/90 →		VKPC 86409	
1.2 (B572, B57N, C572, S572)	E5F - 1171 cc	06/90 →		VKPC 86409	
1.2 (C577, S577, B577)	C3G - 1239 cc	06/90 →		VKPC 86212	VKPA 86212
1.4 (B573, B57P, C573, 557B)	E6J - 1390 cc	06/90 →		VKPC 86409	
1.4 (B57B, B57T, B57Y, C57B, C57T, C57Y, S57T)	E7J - 1390 cc	06/90 →		VKPC 86409	
1.4 (357, 557, 657)	E7J - 1390 cc	10/95 → 10/98		VKPC 86216	
1.4 (BBOC, BBOS, CBOC, CBOS)	E7J - 1390 cc	10/97 →		VKPC 86216	
1.6 (BBOD, CBOD)	K7M (744/745) - 1598 cc	03/98 →		VKPC 86415	
1.6 (CBOT)	K4MG7 - 1598 cc	98 →		VKPC 86416	
1.7 (B574, C574)	F2N - 1721 cc	06/90 → 03/96		VKPC 86413	
1.8 16S (C575, C57D)	F7P - 1764 cc	06/90 → 03/96		VKPC 86413	
1.8 (B578, B57C, B57U, C578, C579, C57C, C57H, C57U)	F3P - 1794 cc	06/91 →		VKPC 86413	
1.8 (357A, 357D, 357E, 557A, 557D)	F3P - 1794 cc	06/91 →		VKPC 86413	
2.0 (C57M)	F7R - 1998 cc	93 → 03/96		VKPC 86413	
2.0 16V (CB0M)	F4R - 1998 cc	03/98 →		VKPC 86413	

www.bergab.ru Берг АБ bergab@ya.ru Тел. (495)-228-06-21, факс (495) 223-3071

www.bergab.ru Берг АБ bergab@ya.ru Тел. (495)-228-06-21, факс (495) 223-3071

1.9 DIESEL (B576, B57I, B57L, C576, C57I, C57L)	F8Q - 1870 cc	06/90 →		VKPC 86413
1.9 DIESEL (S576, S57I, S57L, 357N, 557N, 657H, 657N)	F8Q - 1870 cc	06/90 →		VKPC 86413
1.9 DIESEL (BBOE, BBOJ, CBOE, CBOJ, SBOE, SBOR)	F8Q - 1870 cc	03/98 →		VKPC 86413
1.9 DIESEL (BB0U, CB0U, SB0U)	F9Q - 1870 cc	03/98 →		VKPC 86413
ESPACE				
2.0 (J112, S112)	J6R - 1995 cc	85 → 01/91		VKPC 86602
2.0 (J116)	J7R - 1995 cc	85 → 01/91		VKPC 86602
2.0 (J636)	J7R - 1995 cc	01/91 → 11/95		VKPC 86603
2.0 (JE0A)	F3R - 1998 cc	96 →		VKPC 86413
2.0 16V (JE0N)	F4R -1998 cc	98 →		VKPC 86413
2.2 (J117)	J7T - 2165 cc	85 → 01/91		VKPC 86602
2.2 (J63G, J637, S637)	J7T - 2165 cc	01/91 → 11/95		VKPC 86603
2.1 DIESEL / TURBO DIESEL (J114, J115, S115)	J8S - 2068 cc	85 → 01/91		VKPC 86602
2.1 DIESEL / TURBO DIESEL (J63D, J63E, J633, J634, J635)	J8S - 2068 cc	01/91 → 11/95		VKPC 86621
2.1 DIESEL / TURBO DIESEL (S63D, S635)	J8S - 2068 cc	01/91 → 11/95		VKPC 86621
2.2 DIESEL (JEOE, JEOH)	G8T.714/716 - 2188 cc	96 →		VKPC 86633
FUEGO				
1.4 (R1360)	847-20 - 1397 cc	80 → 84		VKPC 86401
1.4 (R1360)	847-20 - 1397 cc	84 → 86		VKPC 86402
1.6 (R1361)	A2M - 1647 cc	83 → 86		VKPC 86407
1.6 (R1362)	843/A6M - 1647 cc	80 → 86	|→CH 43401	VKPC 86407
1.6 TURBO (R1365, R136A)	A5L/A7L - 1565 cc	84 → 86		VKPC 86407
2.0 (R1363)	829/J6R - 1995 cc	81 → 86		VKPC 86602
2.2 (R136B)	J7T - 2165 cc	81 → 86		VKPC 86602
2.1 TURBO DIESEL (R1366)	J8S - 2068 cc	83 → 85		VKPC 86602
JEEP				
2.0 TURBO DIESEL (CJ7)	J5R - 1995 cc	82 →		VKPC 86623
2.1 DIESEL / TURBO DIESEL (CJ7)	J8S - 2068 cc	82 →		VKPC 86623
JEEP CHEROKEE/GRAND CHEROKEE				
2.1 DIESEL / TURBO DIESEL (XJ)	J8S - 2068 cc	85 →		VKPC 86623
2.5 TURBO DIESEL	VM425 - 2499 cc	95 →		VKPC 82810
RENAULT LAGUNA				
1.6 (B568, K568)	K4MF7 - 1598 cc	98 →		VKPC 86416
1.8 (B560, B56A, B56B, B56S, B56T, B56Z)	F3P - 1794 cc	94 →		VKPC 86413
1.8 (K560, K567, K56S, K56T, K56Z)	F3P - 1794 cc	94 →		VKPC 86413
1.8i 16V (B56D, K56D)	N7Q-700 - 1848 cc	94 →		VKPC 86618
1.8i 16V (B56M, K56M)	N7Q-704 - 1848 cc	94 → 10/98		VKPC 86618
1.8i 16V (K563, K564)	F4P-760 - 1783 cc	96 →		VKPC 86413
2.0 (B56C, B56H, B56L, B56N, K56C, K56H, K56L, K56N)	F3R - 1998 cc	94 →		VKPC 86413
2.0 (K56S, K56T, K56Z, K560)	F3R - 1998 cc	94 →		VKPC 86413
1.9 DIESEL (K56J, S56J)	F9Q - 1870 cc	96 →		VKPC 86413
2.2 DIESEL (B56F, B562, K56F, K562, S56F)	G8T.706/790 - 2188 cc	01/94 → 10/95		VKPC 86631
2.2 DIESEL (B56F, B56P, B562)	G8T.752/792 - 2188 cc	11/95 →		VKPC 86633

www.bergab.ru Берг АБ bergab@ya.ru Тел. (495)-228-06-21, факс (495) 223-3071

www.bergab.ru Берг АБ bergab@ya.ru Тел. (495)-228-06-21, факс (495) 223-3071

RENAULT .../...

2.2 DIESEL (B566, B569, K562, K569)	G8T.760/794 - 2188 cc	11/95 →		VKPC 86633
2.2 DIESEL (K566, S566)	G8T.792 - 2188 cc	11/95 →		VKPC 86633
2.2 DIESEL (K56F, S56F)	G8T.752 - 2188 cc	11/95 →		VKPC 86633
2.2 TURBO DIESEL (B56F, B562, K56F, K562, S56F)	G8T.706/790 - 2188 cc	01/94 → 10/95		VKPC 86631
2.2 TURBO DIESEL (B566, B569, K562, K569)	G8T.760/794 - 2188 cc	11/95 →		VKPC 86633
2.2 TURBO DIESEL (B56F, B56P, B562)	G8T.752/792 - 2188 cc	11/95 →		VKPC 86633
2.2 TURBO DIESEL (K566, S566)	G8T.792 - 2188 cc	11/95 →		VKPC 86633
2.2 TURBO DIESEL (K56F, S56F)	G8T.752 - 2188 cc	11/95 →		VKPC 86633

RENAULT MEGANE

1.4 (BA0E, BA0T, JA0E, LA0E)	E7J - 1390 cc	10/95 →		VKPC 86216
1.4 16V (BA0D, BA1H, BA0W, BA10)	K4J714/750 - 1390 cc	03/99 →		VKPC 86416
1.4 16V (LA0D, LA1H, LA0W, LA10)	K4J714/750 - 1390 cc	03/99 →		VKPC 86416
1.4 16V (KA0D, KA1H, KA0W, KA10)	K4J714/750 - 1390 cc	03/99 →		VKPC 86416
1.4 16V (DA0D, DA1H, DAOW, DA10)	K4J714/750 - 1390 cc	03/99 →		VKPC 86416
1.4 16V (EA0D, EA1H, EA0W, EA10)	K4J714/750 - 1390 cc	03/99 →		VKPC 86416
1.6 (BA0F, BA0L, BA0S, DA0F, EA0F, JA0F, JA0L, LA0F, LA0L, LA0S)	K7M - 1598 cc	10/95 →		VKPC 86415
1.6 16V (BA11, BA04, BA0B, BA1J)	K4M700/701/704/708 1598 cc	03/99 →		VKPC 86416
1.6 16V (LA04, LA11, LA0B, LA1C, LA1J)	K4M700/701/708 - 1598 cc	03/99 →		VKPC 86416
1.6 16V (KA0B, KA04, KA11)	K4M700/701/704/708 1598 cc	03/99 →		VKPC 86416
1.6 16V (DA0B, DA04, DA11)	K4M700/701/708 - 1598 cc	03/99 →		VKPC 86416
1.6 16V (EA0B, EA04, EA11)	K4M700/701/708 - 1598 cc	03/99 →		VKPC 86416
2.0 (BA0G, BA07, DA0G, EA0G, JA0G, LA0G, LA07)	F3R - 1998 cc	10/95 →		VKPC 86413
2.0 (BA0H, DA0H, EA0H)	F7R - 1998 cc	10/95 →		VKPC 86413
1.9 DIESEL / TURBO DIESEL (BA0A, BA0K, BA0U, BA0Y, BA09)	F8Q - 1870 cc	10/95 →		VKPC 86413
1.9 DIESEL / TURBO DIESEL (LA0A/LA0K, LA0U, LA0Y)	F8Q - 1870 cc	10/95 →		VKPC 86413
1.9 DIESEL / TURBO DIESEL (FA0J, FA0Y, JA0J, JA0K, JA0Y)	F8Q - 1870 cc	10/95 →		VKPC 86413
1.9 DIESEL / TURBO DIESEL (SA0A, SA0L, SA0Y)	F8Q - 1870 cc	10/95 →		VKPC 86413
1.9 DIESEL / TURBO DIESEL (BA0N, BA08, DA0N, JA0N, LA0N, LA08)	F9Q - 1870 cc	10/95 →		VKPC 86413

RENAULT SAFRANE

1.9 (B54F)	N7Q - 1948 cc	10/96 →		VKPC 86618
2.0 (B54E, B54F, B540, B542)	J7R - 1995 cc	04/92 →		VKPC 86606
2.2 (B541, B543)	J7T - 2165 cc	04/92 →		VKPC 86606
2.4 (B54L)	N7U - 2435 cc	10/96 →		VKPC 86618
2.1 TURBO DIESEL (B546)	J8S - 2068 cc	04/92 →	→|Mot. 920501	VKPC 86615
2.1 TURBO DIESEL (B546)	J8S - 2068 cc	04/92 →	|→Mot. 920502	VKPC 86616
2.1 TURBO DIESEL (B546)	J8S - 2068 cc	04/92 →	AC	VKPC 86616
2.2 TURBO DIESEL (B56G)	G8T.740 - 2188 cc	10/96 →		VKPC 86633

www.bergab.ru Берг АБ bergab@ya.ru Тел. (495)-228-06-21, факс (495) 223-3071

www.bergab.ru Берг АБ bergab@ya.ru Тел. (495)-228-06-21, факс (495) 223-3071

2.5 TURBO DIESEL (B548)	S8U (8144) - 2499 cc	04/92 →		**VKPC 82638**	

TWINGO

1.1 (C066, C067, S066)	DF7 - 1149 cc	93 →		**VKPC 86215**	
1.2 (C063, C064, S063, S064)	C3G - 1239 cc	93 →	~~AC~~	**VKPC 86212**	**VKPA 86212**
1.2 (C063, C064, S063, S064)	C3G - 1239 cc	93 →	AC	**VKPC 86217**	**VKPA 86217**

RENAULT COMMERCIAL

ESTAFETTE

1.1 (R2132, R2134)	688 - 1108 cc	69 → 80		**VKPC 86208**	
1.3 (R2136, R2137)	810 - 1289 cc	69 → 80		**VKPC 86208**	

EXPRESS F40

1.0 (F400)	C1C - 956 cc	86 → 08/91	~~AC~~	**VKPC 86206**	**VKPA 86206**
1.0 (F400)	C1C - 956 cc	86 → 08/91	AC	**VKPC 86209**	
1.1 (F401, F40H, F40T)	C1E - 1108 cc	86 → 08/91	~~AC~~	**VKPC 86206**	**VKPA 86206**
1.1 (F401, F40H, F40T)	C1E - 1108 cc	86 → 08/91	AC	**VKPC 86209**	
1.2 (F40E, F40F)	C1G - 1237 cc	86 → 08/91	~~AC~~	**VKPC 86206**	**VKPA 86206**
1.2 (F40E, F40F)	C1G - 1237 cc	86 → 08/91	AC	**VKPC 86209**	
1.2 (F406, G40A)	C3G - 1239 cc	86 →		**VKPC 86212**	**VKPA 86212**
1.4 (F40A, F40Y)	E6J - 1390 cc	86 →		**VKPC 86409**	
1.4 (F40D, F40U, F40V)	E7J - 1390 cc	86 →		**VKPC 86409**	
1.4 (F402)	C1J - 1397 cc	86 → 08/91	~~AC~~	**VKPC 86206**	**VKPA 86206**
1.4 (F402)	C1J - 1397 cc	86 → 08/91	AC	**VKPC 86209**	
1.4 (F40M)	C2J - 1397 cc	86 → 08/91	~~AC~~	**VKPC 86206**	**VKPA 86206**
1.4 (F40M)	C2J - 1397 cc	86 → 08/91	AC	**VKPC 86209**	
1.4 (F407)	C3J - 1397 cc	86 → 08/91	~~AC~~	**VKPC 86206**	**VKPA 86206**
1.4 (F407)	C3J - 1397 cc	86 → 08/91	AC	**VKPC 86209**	
1.4 (F40S)	E7J - 1390 cc	10/95 → 98		**VKPC 86216**	
1.6 DIESEL (F404)	F8M - 1596 cc	86 →		**VKPC 86413**	
1.9 DIESEL (F40E, F40N, F40P, F40R, G40B, G40C)	F8Q - 1870 cc	86 →		**VKPC 86413**	

KANGOO

1.1 (FCOA, KCOA)	DF7 - 1149 cc	10/97 →		**VKPC 86215**	
1.4 (FCOC, KCOC)	E7J - 1390 cc	10/97 →		**VKPC 86216**	
1.9 DIESEL (KC0D, KC0E)	F8Q - 1870 cc	10/97 →		**VKPC 86413**	

MASTER

2.0 (R..2)	829-731 - 1995 cc	81 → 10/86		**VKPC 86405**	
2.0 (R..2)	J5R-718 - 1995 cc	81 → 07/89		**VKPC 86405**	
2.0 (R..2)	J5R-718 - 1995 cc	07/89 →		**VKPC 86408**	
2.2 (R..A, R..E)	J7T-782 - 2165 cc	81 → 07/91		**VKPC 86405**	
2.2 (R..A, R..E)	J7T-782 - 2165 cc	07/91 →		**VKPC 86603**	
2.1 DIESEL (R..3)	J8S-330 - 2068 cc	81 →		**VKPC 86602**	
2.5 DIESEL (R..G, R..4, R..6)	S8U-731/742/748 - 2445 cc	81 →		**VKPC 82630**	
2.5 DIESEL (R..C, R..H, R..J, R..5, R..7)	S9U-700/702/704/714/740 - 2445 cc	81 →		**VKPC 82630**	

TRAFIC

1.4 (PO, TO)	847/C1J - 1397 cc	09/80 → 06/84		**VKPC 86401**	
1.4 (PO, TO)	847/C1J - 1397 cc	07/84 → 10/97		**VKPC 86402**	
1.6 (T1, V1)	A1M - 1647 cc	09/80 →		**VKPC 86407**	VKPA 86407
1.7 (PC8, P38, P8)	F1N - 1721 cc	09/80 →		**VKPC 86413**	
1.7 (T8, TB, VB)	F1N - 1721 cc	09/80 → 10/97		**VKPC 86413**	
1.7 (P318, P358)	F1N-722 - 1721 cc	07/89 →		**VKPC 86413**	
2.0 (P2)	829 - 1995 cc	09/80 →		**VKPC 86623**	
2.0 (P2, T2, V2)	J5R - 1995 cc	09/80 → 10/97	→ Mot. 890726	**VKPC 86405**	

www.bergab.ru Берг АБ bergab@ya.ru Тел. (495)-228-06-21, факс (495) 223-3071

www.bergab.ru Берг АБ bergab@ya.ru Тел. (495)-228-06-21, факс (495) 223-3071

RENAULT COMMERCIAL .../...

2.0 (P2, T2, V2)	J5R - 1995 cc	09/80 → 10/97	|Mot. 890727	VKPC 86603
2.2 (TA, VA)	J7T - 2165 cc	09/80 → 10/97	→|Mot. F305272	VKPC 86405
2.2 (TA, VA)	J7T - 2165 cc	09/80 → 10/97	|Mot. F305273	VKPC 86603
2.2 (TA, VA)	J7T - 2165 cc	03/89 → 10/97	→|Mot. F910703	VKPC 86405
2.2 (TA, VA)	J7T - 2165 cc	03/89 → 10/97	|Mot. F910704	VKPC 86603
2.2 (TE, T8, VE)	J7T - 2165 cc	03/89 → 10/97		VKPC 86603
1.9 DIESEL (TJ)	F8Q - 1870 cc	11/97 →		VKPC 86413
2.1 DIESEL (P3, V3)	852 - 2068 cc	→ 02/89		VKPC 86601
2.1 DIESEL (P3, V3)	852 - 2068 cc	03/89 → 10/97		VKPC 86623
2.1 DIESEL (PF, TF, TK)	J8S - 2068 cc	03/89 → 10/97		VKPC 86603
2.5 DIESEL (TB, TF, TG, VB, VE, VG, P4, T4, V4)	S8U (8140) - 2445 cc	03/89 →		VKPC 82630

ROVER (AUSTIN, M.G., MORRIS)

A 35/ A40

0.9	9 DB - 948 cc	→ 67		VKPC 87200
1.1	10 D/U/H - 1098 cc	→ 75		VKPC 87200
1.1 MARK III	10H - 1098 cc	→ 75		VKPC 87200
1.1 MARK IV	12 H - 1275 cc	73 → 82		VKPC 87200

ALLEGRO

1.0	99H - 998 cc	73 → 82		VKPC 87206
1.1	10H - 1098 cc	73 → 82		VKPC 87206
1.3	12H - 1275 cc	73 → 82		VKPC 87206

FREIGHT ROVER

2.5 DIESEL	14J/15J - 2495 cc	83 →		VKPC 87606

LAND ROVER

2.2	2250 cc	61 → 81		VKPC 87602
90/110 3.5 V8	3500 cc	83 →		VKPC 87800
2.4 TURBO DIESEL	VM-HR492 - 2393 cc	82 → 86		VKPC 87600

LAND ROVER DISCOVERY

200 TDI 2.5 TURBO DIESEL	12L - 2495 cc	89 →		VKPC 87835

RANGE ROVER

200 TDI 2.5 TURBO DIESEL	14L - 2497 cc	02/92 →		VKPC 87835

MAESTRO

1.3	12 H - 1275 cc	83 → 91		VKPC 87205
1.6	16 H - 1585 cc	83 → 09/84		VKPC 87207
1.6	16 H - 1585 cc	10/84 →		VKPC 87403
2.0	20 H - 1996 cc	83 → 91		VKPC 87609

MARINA

1.3	12 H - 1275 cc	71 → 80		VKPC 87200

www.bergab.ru Берг АБ bergab@ya.ru Тел. (495)-228-06-21, факс (495) 223-3071

www.bergab.ru Берг АБ bergab@ya.ru Тел. (495)-228-06-21, факс (495) 223-3071

METRO				
1.0	99 H - 998 cc	80 → 90		**VKPC 87200**
1.1	11 K - 1119 cc	90 →		**VKPC 87400**
1.3	12 H - 1275 cc	80 → 90		**VKPC 87200**
1.4 8V	14 K - 1396 cc	90 →		**VKPC 87400**
1.4 GTI 16V	14 K - 1396 cc	90 →		**VKPC 87401**
M.G MIDGET				
1.1	10H - 1098 cc	64 → 66		**VKPC 87200**
1.3	12 H - 1275 cc	66 → 74		**VKPC 87200**
MINI / MINOR				
0.85	85 H - 848 cc	72 → 90		**VKPC 87200**
1.0	97 H - 970 cc	59 → 72		**VKPC 87200**
1.0	99 H - 998 cc	72 → 90		**VKPC 87200**
1.1	10H - 1098 cc	74 → 90		**VKPC 87200**
1.3	12 A - 1275 cc	68 →		**VKPC 87200**
1.3 TURBO	12 H - 1275 cc	90 →		**VKPC 87200**
MONTEGO				
1.3	12 H - 1275 cc	83 → 91		**VKPC 87205**
1.6	16 H - 1585 cc	10/84 → 10/88		**VKPC 87403**
2.0	20 H - 1993 cc	86 → 10/88		**VKPC 87609**
2.0 TURBO	20 H - 1993 cc	86 →		**VKPC 87609**
ROVER SD1				
2.4 DIESEL	HR VM 492 - 2393 cc	01/82 → 10/86		**VKPC 87600**
TRIUMPH				
ACCLAIM 1.3	EN 1/2/4 - 1335 cc	81 → 84		VKPC 93207
ROVER 100 SERIES				
111 1.1	11 K - 1119 cc	90 →		**VKPC 87400**
114 1.4 8v	14 K - 1396 cc	90 →		**VKPC 87400**
114 1.4 GTI 16V	14 K - 1396 cc	90 →		**VKPC 87401**
114 1.4 DIESEL	TUD3 - 1360 cc	92 → 95		**VKPC 83205**
115 1.5 DIESEL	TUD5 - 1527 cc	01/95 →		**VKPC 83428**
ROVER 200 SERIES				
213 1.3	EV 2 - 1342 cc	84 → 90		**VKPC 93205**
214 1.4 8V	14 K2 - 1396 cc	10/89 → 92		**VKPC 87400**
214 1.4 16V	14 K4 - 1396 cc	10/89 →		**VKPC 87401**
216 1.6	16 H - 1598 cc	84 → 90		**VKPC 87403**
216 1.6	D16 A - 1590 cc	10/89 →	SOHC	**VKPC 87404**
220 2.0 16V	20M4 - 1993 cc	10/89 → 09/92		**VKPC 87816**
220 2.0 16V	20M4 - 1993 cc	10/92 →		**VKPC 87813**
218 1.9 DIESEL	D9B-XUD9A - 1905 cc	01/93 → 01/94		**VKPC 83424**
218 1.9 DIESEL	D9B-XUD9A - 1905 cc	01/94 →		**VKPC 83420**
218 1.8 TURBO DIESEL	A8A-XUD7TE - 1769 cc	04/91 → 01/94		**VKPC 83424**
218 1.8 TURBO DIESEL	A8A-XUD7TE - 1769 cc	01/94 →		**VKPC 83420**
ROVER 400 SERIES				
414 1.4 8V	14 K2 - 1396 cc	10/89 → 92		**VKPC 87400**
414 1.4 16V	14 K4 - 1396 cc	10/89 →		**VKPC 87401**
414 1.6	16 H - 1598 cc	84 → 90		**VKPC 87403**
414 1.6	D16 A - 1590 cc	10/89 →	DOHC	**VKPC 87404**
420 2.0 16V	20M4 - 1993 cc	10/89 → 09/92		**VKPC 87816**

www.bergab.ru Берг АБ bergab@ya.ru Тел. (495)-228-06-21, факс (495) 223-3071

www.bergab.ru Берг АБ bergab@ya.ru Тел. (495)-228-06-21, факс (495) 223-3071

ROVER (AUSTIN, M.G., MORRIS).../...

420 2.0 16V	20M4 - 1993 cc	10/92 →	VKPC 87813
418 1.9 DIESEL	D9B-XUD9A - 1905 cc	01/93 → 01/94	VKPC 83424
418 1.9 DIESEL	D9B-XUD9A - 1905 cc	01/94 →	VKPC 83420
418 1.8 TURBO DIESEL	A8A-XUD7TE - 1769 cc	04/91 → 01/94	VKPC 83424
418 1.8 TURBO DIESEL	A8A-XUD7TE - 1769 cc	01/94 →	VKPC 83420

ROVER 600 SERIES

618 1.8	F18 - 1849 cc	04/93 → 99	VKPC 93601
620 2.0	F20 - 1997 cc	04/93 → 99	VKPC 93601
620 2.0 TURBO	20T4 - 1994 cc	07/93 → 99	VKPC 87813
623 2.3 i.e 16V	H23A3 - 2259 cc	10/93 → 99	VKPC 87814
620 2.0 DIESEL	20D - 1994 cc	04/93 → 99	VKPC 87813

ROVER 800 SERIES

820 2.0	20H - 1993 cc	→ 09/88	VKPC 87607
820 2.0	20H - 1993 cc	10/88 → 09/91	VKPC 87607
820 2.0	20H - 1993 cc	10/91 → 99	VKPC 87813
820 2.0	20H(E81/E82) - 1993 cc	10/88 → 09/91	VKPC 87816
825 2.5 V6	C25 - 2494 cc	→ 09/88	VKPC 87610
827 2.7 V6	C27 - 2675 cc	04/88 → 99	VKPC 87610
825 2.5 DIESEL /TURBO DIESEL	97A - 2499 cc	91 →	VKPC 82642

SAAB

SAAB 9-3

2.0	B204 - 1985 cc	07/97 →	VKPC 86630
2.3	B234 - 2290 cc	07/97 →	VKPC 86630
2.2 TURBO DIESEL	D223L - 2171 cc	07/97 →	VKPC 86630
2.2 16V TURBO DIESEL	X22DTH - 2198 cc	03/98 →	VKPC 85623

SAAB 9-5

2.0	B205 - 1985 cc	07/97 →	VKPC 86630
2.0 TURBO	B205E - 1985 cc	07/97 →	VKPC 86630
2.3	B235 - 2290 cc	07/97 →	VKPC 86630
2.3 TURBO	B235E/L/R - 2290 cc	07/97 →	VKPC 86630

SAAB 95/96

1.5	C-V4 (Ford) - 1498 cc	67 → 80	VKPC 84400

SAAB 900

2.0	B20 - 1985 cc	79 → 93	VKPC 84611
2.0 16V	B206 - 1985 cc	11/93 → 98	VKPC 86630
2.0 TURBO	B20 - 1985 cc	80 → 93	VKPC 84611
2.0 TURBO 16V	B204L - 1985 cc	11/93 → 98	VKPC 86630
2.1 16V	B212 - 2119 cc	91 → 93	VKPC 84611
2.3	B234 - 2290 cc	11/93 → 98	VKPC 86630
2.5 24V	B258I - 2498 cc	09/93 → 97	VKPC 85613

SAAB 9000

2.0	B202 - 1985 cc	85 → 08/93	VKPC 84612
2.0	B204 - 1985 cc	91 →	VKPC 84613
2.0	B202 - 1985 cc	09/93 →	VKPC 84613
2.0 16V	B206 - 1985 cc	94 →	VKPC 84613
2.0 TURBO	B202S - 1985 cc	85 → 08/93	VKPC 84612
2.0 TURBO	B204E/L/S - 1985 cc	91 →	VKPC 84613

www.bergab.ru Берг АБ bergab@ya.ru Тел. (495)-228-06-21, факс (495) 223-3071

www.bergab.ru Берг АБ bergab@ya.ru Тел. (495)-228-06-21, факс (495) 223-3071

2.0 TURBO	B202S - 1985 cc	09/93 →	VKPC 84613	
2.3	B234 - 2290 cc	87 →	VKPC 84613	
2.3 TURBO	B234E/L/R - 2290 cc	87 →	VKPC 84613	
3.0 24V	B308I - 2962 cc	09/93 →	VKPC 85613	

SEAT

124				
1.4	124 - 1438 cc	67 → 78	VKPC 82404	
127				
0.9	100GL - 903 cc	72 → 82		VKPA 82202
131				
1.4	1438 cc	75 →	VKPC 82404	
2.5 DIESEL	SOFIM - 2445 cc	75 →	VKPC 82606	
132				
1.6	1592 cc	73 → 82	VKPC 82412	
1.8	1756 cc	73 → 82	VKPC 82412	
2.0	1995 cc	73 → 82	VKPC 82412	
2.0	MB - 2000 cc	73 → 80	VKPC 82619	
600				
0.8	100 D - 767 cc	60 → 69	VKPC 82205	
850				
0.9	100 GBC - 903 cc	68 → 72	VKPC 82204	
ALHAMBRA				
1.8 20V	AJH - 1781 cc	05/98 → 02/00	VKPC 81620	
1.8 20V	AWC - 1781 cc	06/00 →	VKPC 81620	
2.0	ADY - 1984 cc	03/96 → 02/00	VKPC 81401	VKPA 81401
2.0	ATM - 1984 cc	06/00 →	VKPC 81620	
2.8	AUE/AYL - 2792 cc	06/00 →	VKPC 81611	
1.9 TDI	1Z - 1896 cc	03/96 → 07/96	VKPC 81401	VKPA 81401
1.9 TDI	AFN/AHU/AVG - 1896 cc	07/96 → 02/00	VKPC 81401	VKPA 81401
1.9 TDI	AVG - 1896 cc	07/96 → 02/00	VKPC 81401	VKPA 81401
1.9 TDI	ANU/AUY - 1896 cc	06/00 →	VKPC 81626	
AROSA				
1.0	AER/ALL - 999 cc	08/97 → 08/98	VKPC 81215	
1.0	ANV - 999 cc	07/98 →	VKPC 81215	
1.4	AEX/AKV/APQ - 1390 cc	02/97 →	VKPC 81210	
1.4	AKK/ANW - 1390 cc	01/99 →	VKPC 81215	
1.4 16V	AHW/AKQ - 1390 cc	09/98 →	VKPC 81407	
1.4 16V	AFK/ANM/AQQ - 1390 cc	01/99 →	VKPC 81407	
1.4 TDI	AMF - 1422 cc	01/99 →	VKPC 81417	
1.7 DIESEL	AKU - 1716 cc	08/97 → 04/98	VKPC 81615	
CORDOBA				
1.0	AAU - 1043 cc	02/93 →	VKPC 81204	
1.0	ALD/ANV - 999 cc	05/99 →	VKPC 81215	
1.3	AAV/2G - 1296 cc	02/93 → 07/94	VKPC 81204	
1.4	AEX - 1389 cc	12/95 →	VKPC 81210	

www.bergab.ru Берг АБ bergab@ya.ru Тел. (495)-228-06-21, факс (495) 223-3071

www.bergab.ru Берг АБ bergab@ya.ru Тел. (495)-228-06-21, факс (495) 223-3071

SEAT .../...

1.4	AKK/ANW - 1390 cc	05/99 →	VKPC 81215	
1.4 i.e	ABD - 1391 cc	09/93 → 12/95	VKPC 81204	
1.4 16V	AFH - 1389 cc	05/97 →	VKPC 81411	
1.4 16V	APE - 1390 cc	05/99 →	VKPC 81407	
1.6	1F - 1598 cc	05/94 →	VKPC 81401	VKPA 81401
1.6	AFT - 1598 cc	12/95 →	VKPC 81401	VKPA 81401
1.6	AEE - 1598 cc	03/97 →	VKPC 81210	
1.6	AEH/AKL - 1598 cc	05/99 →	VKPC 81408	
1.6	ALM - 1598 cc	05/99 →	VKPC 81210	
1.6 i.e	ABU - 1588 cc	02/93 → 07/94	VKPC 81204	
1.8 i.e 16V	ABS/ADL - 1781 cc	02/93 → 06/96	VKPC 81401	VKPA 81401
1.8	ADZ - 1781 cc	07/94 →	VKPC 81401	VKPA 81401
1.8 20V	AQX - 1781 cc	05/99 →	VKPC 81620	
2.0	AGG - 1984 cc	04/96 →	VKPC 81401	VKPA 81401
2.0 i.e	2E - 1984 cc	02/93 → 04/96	VKPC 81401	VKPA 81401
2.0 16V	ABF - 1984 cc	06/96 →	VKPC 81401	VKPA 81401
1.9 DIESEL	1Y - 1896 cc	02/93 →	VKPC 81401	VKPA 81401
1.9 DIESEL	AEY - 1896 cc	12/95 →	VKPC 81401	VKPA 81401
1.9 SDI	AGP/AQM - 1896 cc	05/99 →	VKPC 81623	
1.9 TDI	AAZ - 1896 cc	02/93 →	VKPC 81401	VKPA 81401
1.9 TDI	1Z/AHU/AFN - 1896 cc	07/96 →	VKPC 81401	VKPA 81401
1.9 TDI	AGR/AHF/ALH/ASV - 1896 cc	05/99 →	VKPC 81623	

CORDOBA VARIO

1.4	AEX - 1389 cc	07/96 →	VKPC 81210	
1.4	AKK/ANW - 1390 cc	05/99 →	VKPC 81215	
1.4 16V	AFH - 1389 cc	05/97 →	VKPC 81411	
1.4 16V	APE - 1390 cc	05/99 →	VKPC 81407	
1.6	AFT/1F - 1598 cc	07/96 →	VKPC 81401	VKPA 81401
1.6	AEE - 1598 cc	03/97 →	VKPC 81210	
1.6	AEH/AKL - 1598 cc	05/99 →	VKPC 81408	
1.6	ALM - 1598 cc	05/99 →	VKPC 81210	
1.8	ADZ - 1781 cc	07/96 →	VKPC 81401	VKPA 81401
2.0	AGG - 1984 cc	07/96 →	VKPC 81401	VKPA 81401
2.0 16V	ABF - 1984 cc	07/96 →	VKPC 81401	VKPA 81401
1.9 DIESEL	1Y/AEY - 1896 cc	07/96 →	VKPC 81401	VKPA 81401
1.9 SDI	AGP/AQM - 1896 cc	05/99 →	VKPC 81623	
1.9 TDI	1Z/AAZ/AHU/AFN - 1896 cc	07/96 →	VKPC 81401	VKPA 81401
1.9 TDI	AGR/AHF/ALH/ASV - 1896 cc	05/99 →	VKPC 81623	

FURA / TRANSPO

0.9	100 GL - 903 cc	81 → 86		VKPA 82202

IBIZA

0.9 (A22)	100 GL - 903 cc	11/84 → 04/93		VKPA 82202
1.2 (A21/A22)	021A1000 - 1193 cc	11/84 → 04/93	VKPC 82419	
1.5 (A32)	021A1000 - 1461 cc	11/84 → 04/93	VKPC 82419	
1.7 DIESEL (A42)	022A.500 - 1714 cc	11/84 → 90	VKPC 82410	VKPA 82410
1.7 DIESEL (A42)	022A.500 - 1714 cc	91 → 93		VKPA 82435

IBIZA II

1.0	ALD/ANV - 999 cc	05/99 →	VKPC 81215	
1.0	AAU - 1043 cc	02/93 →	VKPC 81204	
1.3	AAV/2G - 1296 cc	02/93 → 07/94	VKPC 81204	
1.4	ABD - 1391 cc	09/93 → 12/95	VKPC 81204	
1.4	AEX - 1389 cc	12/95 →	VKPC 81210	
1.4	AKK/ANW - 1390 cc	05/99 →	VKPC 81215	
1.4 16V	AFH - 1389 cc	05/97 →	VKPC 81411	
1.4 16V	APE - 1390 cc	05/99 →	VKPC 81407	
1.6	ABU - 1588 cc	02/93 → 07/94	VKPC 81204	

www.bergab.ru Берг АБ bergab@ya.ru Тел. (495)-228-06-21, факс (495) 223-3071

www.bergab.ru Берг АБ bergab@ya.ru Тел. (495)-228-06-21, факс (495) 223-3071

1.6	1F - 1598 cc	05/94 →		**VKPC 81401**	**VKPA 81401**
1.6	AFT - 1598 cc	12/95 →		**VKPC 81401**	**VKPA 81401**
1.6	AEE - 1598 cc	03/97 →		**VKPC 81210**	
1.6	AEH/AKL - 1598 cc	05/99 →		**VKPC 81408**	
1.6	ALM - 1598 cc	05/99 →		**VKPC 81210**	
1.8	ADZ - 1781 cc	07/94 →		**VKPC 81401**	**VKPA 81401**
1.8 16V	ABS/ADL - 1781 cc	02/93 → 06/96		**VKPC 81401**	**VKPA 81401**
1.8 20V	AQX - 1781 cc	05/99 →		**VKPC 81620**	
2.0	2E - 1984 cc	02/93 → 04/96		**VKPC 81401**	**VKPA 81401**
2.0	AGG - 1984 cc	04/96 →		**VKPC 81401**	**VKPA 81401**
2.0 16V	ABF - 1984 cc	06/96 →		**VKPC 81401**	**VKPA 81401**
1.9 DIESEL	1Y - 1896 cc	02/93 →		**VKPC 81401**	**VKPA 81401**
1.9 DIESEL	AEY - 1896 cc	12/95 →		**VKPC 81401**	**VKPA 81401**
1.9 SDI	AGP/AQM - 1896 cc	05/99 →		**VKPC 81623**	
1.9 TDI	AAZ - 1896 cc	02/93 →		**VKPC 81401**	**VKPA 81401**
1.9 TDI	1Z/AHU - 1896 cc	07/96 →		**VKPC 81401**	**VKPA 81401**
1.9 TDI	AGR/AHF/ALH/ASV - 1896 cc	05/99 →		**VKPC 81623**	
LEON					
1.4	APE - 1390 cc	10/99 →		**VKPC 81407**	
1.4 16V	AHW - 1390 cc	01/00 →		**VKPC 81407**	
1.6	AEH/AKL - 1598 cc	10/99 →		**VKPC 81408**	
1.8 20V	AGN - 1781 cc	11/99 →		**VKPC 81620**	
1.8 20V	AJQ - 1781 cc	04/00 →		**VKPC 81620**	
2.8 V6	AUE - 2792 cc	00 → 03	→ Mot. 1M-2-050 000	**VKPC 81611**	
2.8 V6	BDE - 2792 cc	02 → 03	→ Mot. 1M-2-050 000	**VKPC 81611**	
1.9 SDI	AQM - 1896 cc	05/99 →		**VKPC 81623**	
1.9 TDI	AGR/AHF/ALH/ASV - 1896 cc	05/99 →		**VKPC 81623**	
MALAGA					
1.2	021A1000 - 1193 cc	85 → 93		**VKPC 82419**	
1.5	021A1000 - 1461 cc	85 → 93		**VKPC 82419**	
1.7 DIESEL	022A.500 - 1714 cc	85 → 90		**VKPC 82410**	**VKPA 82410**
1.7 DIESEL	022A.500 - 1714 cc	91 → 93			**VKPA 82435**
MARBELLA / PANDA					
0.85	100 GL - 843 cc	80 →			**VKPA 82202**
0.9	100 GL - 903 cc	80 →			**VKPA 82202**
RITMO					
1.3	138A1 - 1301 cc	78 → 83		VKPC 82415	
1.5	138A1 - 1498 cc	78 → 83		VKPC 82415	
1.7 DIESEL	138A5 - 1698 cc	80 → 83		**VKPC 82410**	**VKPA 82410**
RONDA					
1.3	021A1000 - 1193 cc	84 → 87		**VKPC 82419**	
1.5	021A1000 - 1461 cc	84 → 87		**VKPC 82419**	
1.7 DIESEL	022A.500 - 1698 cc	84 → 87		**VKPC 82410**	**VKPA 82410**
TERRA					
0.9	100 GL - 903 cc	83 →			**VKPA 82202**
1.3 DIESEL	MN - 1272 cc	89 →		**VKPC 81206**	
1.4 DIESEL	1W - 1398 cc	10/90 →		**VKPC 81206**	
TOLEDO					
II 1.4 16V	AHW - 1390 cc	01/00 →		**VKPC 81407**	

www.bergab.ru Берг АБ bergab@ya.ru Тел. (495)-228-06-21, факс (495) 223-3071

www.bergab.ru Берг АБ bergab@ya.ru Тел. (495)-228-06-21, факс (495) 223-3071

SEAT .../...

1.6	EZ/1F - 1595/8 cc	05/91 →		VKPC 81401	VKPA 81401
1.6	AFT - 1598 cc	09/96 →		VKPC 81401	VKPA 81401
II 1.6	AEH - 1598 cc	11/98 →		VKPC 81408	
II 1.6	AKL - 1598 cc	09/99 →		VKPC 81408	
1.8	RP - 1781 cc	05/91 →		VKPC 81401	VKPA 81401
1.8	ADZ - 1781 cc	07/96 → 04/97		VKPC 81401	VKPA 81401
1.8 16V	KR - 1781 cc	05/91 →		VKPC 81401	VKPA 81401
1.8 16V	PL - 1781 cc	05/91 →		VKPC 81401	VKPA 81401
II 1.8 20V	AGN/AGU - 1781 cc	11/98 →		VKPC 81620	
2.0	ZE - 1984 cc	05/91 →		VKPC 81401	VKPA 81401
2.0	ABF/AGG - 1984 cc	09/96 → 04/97		VKPC 81401	VKPA 81401
II 2.3 V5	AGZ - 2309 cc	10/98 →		VKPC 81622	
1.9 DIESEL	1Y - 1896 cc	05/91 → 04/97		VKPC 81401	VKPA 81401
1.9 TURBO DIESEL	AAZ - 1896 cc	05/91 → 04/97		VKPC 81401	VKPA 81401
1.9 TDI	1Z - 1896 cc	09/96 → 12/96		VKPC 81401	VKPA 81401
1.9 TDI	AHU/AFN - 1896 cc	10/96 →		VKPC 81401	VKPA 81401
II 1.9 TDI	AGR/AHF/ALH/ASV - 1896 cc	10/98 →		VKPC 81623	

SEAT COMMERCIAL

INCA

1.4	AEX - 1389 cc	11/95 →		VKPC 81210	
1.4	AKV/APQ - 1390 cc	12/97 →		VKPC 81210	
1.6	1F - 1598 cc	11/95 →		VKPC 81401	VKPA 81401
1.6	AEE - 1598 cc	06/97 →		VKPC 81210	
1.7 SDI	AHB - 1716 cc	07/96 →		VKPC 81401	VKPA 81401
1.9 DIESEL	1Y - 1896 cc	11/95 →		VKPC 81401	VKPA 81401
1.9 SDI	AEY - 1896 cc	11/95 →		VKPC 81401	VKPA 81401
1.9 TDI	AHU - 1896 cc	12/96 →		VKPC 81401	VKPA 81401

SKODA

S105 (742/744)

1.0	742.10 - 1046 cc	77 → 89		VKPC 88204	

S120 (742/744/120G)

1.2	742.12 - 1174 cc	77 → 89		VKPC 88204	

FABIA

1.4	AUA/AUB - 1390 cc	10/99 →		VKPC 81407	
2.0	AZL - 1984 cc	00 →		VKPC 81620	
1.9 SDI	ASY - 1896 cc	02/00 →		VKPC 81416	
1.9 TDi	ATD - 1896 cc	02/00 →		VKPC 81417	

FAVORITE

1.3	135/136 - 1289 cc	08/87 → 95	Carbu.	VKPC 81405	
1.3	135I/136I - 1289 cc	93 → 95	Injec.	VKPC 81409	

FELICIA

1.3	135B - 1289 cc	10/94 →		VKPC 81406	
1.3	AMG/AMH/AMJ - 1289 cc	08/96 →	~~AC~~	VKPC 81406	
1.3	135B/135I/136I - 1289 cc	95 →	AC	VKPC 81412	
1.6	AEE - 1598 cc	05/95 → 08/98		VKPC 81210	
1.6	AEE - 1598 cc	09/98 →		VKPC 81210	

www.bergab.ru Берг АБ bergab@ya.ru Тел. (495)-228-06-21, факс (495) 223-3071

www.bergab.ru Берг АБ bergab@ya.ru Тел. (495)-228-06-21, факс (495) 223-3071

1.9 DIESEL	AEF - 1896 cc	07/95 →		VKPC 81615

FORMAN

1.3	135/136 - 1289 cc	08/87 → 95	Carbu.	VKPC 81405
1.3	135I/136I - 1289 cc	93 → 95	Injec.	VKPC 81409

OCTAVIA

1.6	AEE - 1598 cc	10/96 → 08/98		VKPC 81210
1.6	AEE - 1598 cc	09/98 →		VKPC 81210
1.6	AEH/AKL - 1598 cc	04/97 → 11/98		VKPC 81408
1.6	AEH/AKL - 1598 cc	12/98 →		VKPC 81408
1.8 20V	AGN/AGU - 1781 cc	10/96 → 08/98		VKPC 81620
2.0	APK/AQY - 1984 cc	97 →		VKPC 81620
1.9 SDi	AGP - 1896 cc	10/96 →		VKPC 81623
1.9 TDi	AGR/AHF - 1896 cc	10/96 →		VKPC 81623

PICK-UP

1.3	135/136 - 1289 cc	08/87 → 95	Carbu.	VKPC 81405
1.3	135I/136I - 1289 cc	93 → 95	Injec.	VKPC 81409
1.3	1289 cc	10/95 → 07/96		VKPC 81406
1.3	AMG/AMH/AMJ - 1289 cc	08/96 → 12/97	~~AC~~	VKPC 81406
1.6	AEE - 1598 cc	08/96 → 08/98		VKPC 81210
1.6	AEE - 1598 cc	09/98 →		VKPC 81210
1.9 DIESEL	AEF - 1896 cc	10/95 → 12/97		VKPC 81615

SUPERB

1.8	AWT - 1781 cc	02 →		VKPC 81620
2.0	AZM - 1984 cc	02 →		VKPC 81620
1.9 TDI	AVB/AWX - 1896 cc	02 →		VKPC 81626
2.5 24V TDI	AYM - 2496 cc	02 →		VKPC 81625

SMART

SMART

600 Turbo	599 cc	98 →		VKPC 88848
800 CDI	799 cc	00 →		VKPC 88848

SUBARU

IMPREZA

1.6 16V (GC-GF 3/4/5/6)	EJ16E - 1597 cc	93 →		VKPC 99407
1.8 16V (GC-GF 3/4/5/6)	EJ18E - 1820 cc	93 →		VKPC 99407
2.0	EJ20E - 1994 cc	93 →		VKPC 99407

JUSTY

1.3	G13B - 1298 cc	03/96 →		VKPC 96210

LEGACY

1.6 16V (BC/BF/BJ)	EJ16E - 1597 cc	90 → 94		VKPC 99407
1.8 16V (BC/BF/BJ)	EJ18E - 1820 cc	90 →		VKPC 99407
2.0i 16V (BC/BF/BJ)	EJ20E - 1994 cc	90 →		VKPC 99407
2.2i 16V (BC/BF/BJ)	EJ22E - 2212 cc	90 →		VKPC 99407

www.bergab.ru Берг АБ bergab@ya.ru Тел. (495)-228-06-21, факс (495) 223-3071

www.bergab.ru Берг АБ bergab@ya.ru Тел. (495)-228-06-21, факс (495) 223-3071

SUBARU .../...

LEONE

1.4 (AF-1/AM-1)	EA-65 - 1398 cc	→ 10/84		VKPC 99403
1.6 (AB-2/AB-3/AF-2/AF-3/AM-2/ AM-3)	EA-71 - 1595 cc	79 → 07/84		VKPC 99403
1.8 (AB-4/AB-5/AF-5/AJ-5/AM-5)	EA-81 - 1781 cc	06/79 → 07/84		**VKPC 99404**

L SERIES

1.3 (AC/AG/AK/AN)	EA65A - 1300 cc	84 → 89		VKPC 99405
1.6 (AC/AG/AK/AN)	EA71A - 1600 cc	84 → 89		VKPC 99405
1.8 (AC/AG/AK/AN)	EA82A/E/T - 1781 cc	84 → 89		**VKPC 99406**

SUZUKI

ALTO

0.55 (SS40)	F5A - 543 cc	02/82 → 12/85	⊢→CH 225692, →⊢CH 679599	**VKPC 96204**
0.55 (SS41)	F5A - 543 cc	10/83 → 09/84		**VKPC 96204**
0.55 (CA71/CA72/CC71/CC72)	F5A - 543 cc	09/84 → 12/88		**VKPC 96204**
0.8 (SS80)	F8B - 796 cc	03/81 → 07/83		**VKPC 96204**
0.8 (CA91)	F8B - 796 cc	07/83 →		**VKPC 96204**

BALENO

1.6i 16V (SY416)	G16B - 1590 cc	95 →		**VKPC 96402**

JIMNY

0.55 (JA71)	F5A - 543 cc	01/86 → 03/90		**VKPC 96204**
0.8 (LJ80/SJ20)	F8A - 796 cc	09/77 → 07/82		**VKPC 96204**
1.0 (SJ410)	F10A - 970 cc	08/82 → 12/84		**VKPC 96204**

JUSTY

1.3	G13B - 1298 cc	03/96 →		**VKPC 96210**

MIGHTY - BOY

0.55 (SS40T)	F5A - 543 cc	02/83 →		**VKPC 96204**

SAMURAI

1.0 (SJ410)	F10A - 970 cc	08/82 → 12/84		**VKPC 96204**
1.3 (SJ413)	G13 - 1298 cc	07/83 → 08/88		**VKPC 96212**
1.3 (SJ413)	G13A - 1324 cc	11/84 → 05/88		**VKPC 96212**

SJ410

1.0 (SJ40, SJ41)	F10A - 970 cc	08/85 →		**VKPC 96204**

SJ413

1.3 (SJ50, SJ51, SJ70, SJ71)	G13 - 1315 cc	09/84 →		**VKPC 96212**

SUPER CARRY

0.5 (ST40K)	F5A - 543 cc	01/84 → 03/85	⊢→CH 270901, →⊢CH 290735	**VKPC 96204**
0.5 (ST40V)	F5A - 543 cc	10/80 → 05/81		**VKPC 96204**

www.bergab.ru Берг АБ bergab@ya.ru Тел. (495)-228-06-21, факс (495) 223-3071

www.bergab.ru Берг АБ bergab@ya.ru Тел. (495)-228-06-21, факс (495) 223-3071

0.5 (ST40V)	F5A - 543 cc	01/84 → 03/85	→CH 929835, →CH 945051	VKPC 96204
0.5 (DA71/DB71) 2v	F5A - 543 cc	03/85 → 05/89		VKPC 96204
0.8 (ST80)	F8A - 796 cc	05/79 → 08/81		VKPC 96204
1.0 (ST90)	F10A - 970 cc	08/81 → 12/85		VKPC 96204
1.0 (DA71)	F10A - 970 cc	01/86 →		VKPC 96204
1.0	F10B - 970 cc	01/89 →	DOHC	VKPC 96204

SWIFT / CULTUS

1.0 (AA41/AB41)	G10 - 993 cc	10/83 → 06/86		VKPC 96212
1.0 (AA43/AB43)	G10 - 993 cc	06/86 → 09/88		VKPC 96212
1.0 (AA44/AB44)	G10 - 993 cc	09/88 →		VKPC 96210
1.3 (AA33/AB33)	G13B - 1298 cc	06/86 → 09/88	DOHC	VKPC 96210
1.3 (AA34/AB34/AF34)	G13B - 1298 cc	09/88 →	DOHC	VKPC 96210
1.3 (SA413)	G13B - 1298 cc	→	Man.GBX, DOHC	VKPC 96212
1.3 (SA413)	G13B - 1298 cc	→	Auto.GBX, DOHC	VKPC 96204
1.3 (AA53/AB53)	G13A - 1324 cc	06/86 → 09/88	Man.GBX	VKPC 96212
1.3 (AA53/AB53)	G13A - 1324 cc	06/86 → 09/88	Auto.GBX	VKPC 96210
1.3 (AB51)	G13A - 1324 cc	08/84 → 06/86		VKPC 96212
1.3 (SA413)	G13A - 1324 cc	→	Man.GBX	VKPC 96212
1.3 (SA413)	G13A - 1324 cc	→	Auto.GBX	VKPC 96204
1.5 (AH64/AJ64)	G15A - 1500 cc	07/91 →		VKPC 96402
1.6 (AH64/AJ64)	G16A - 1590 cc	06/89 →		VKPC 96402
1.6 (SF416)	G16A - 1590 cc	→		VKPC 96402

VITARA

1.6 (SE416)	G16A - 1590 cc	05/88 →	2, →Mot. 100101	VKPC 96402
1.6 (SE416)	G16M - 1590 cc	05/88 →	2, →Mot. 300001	VKPC 96402
1.6 (SE416)	G16B - 1590 cc	05/88 → 94	4, →Mot. 300001	VKPC 96402
1.6 (SE416)	G16B - 1590 cc	94 →		VKPC 96402
1.6 (TA01R, V, W/TD01W)	G16A - 1590 cc	05/88 →		VKPC 96402

TALBOT (CHRYSLER/SIMCA/ MATRA)

ALPINE

1.3	G1 - 1294 cc	75 → 84		VKPC 83206
1.4	V2 - 1442 cc	75 → 84		VKPC 83206
1.6	J2 - 1592 cc	75 → 84		VKPC 83206

CHRYSLER

1.6	7R1/R2 - 1623 cc	71 → 11/88		VKPC 83411
1.8	7S2 - 1812 cc	71 → 11/88		VKPC 83411
2.0	7T2 - 1981 cc	71 → 11/88		VKPC 83411

HORIZON

1.1	E1/E1A - 1118 cc	78 → 86		VKPC 83206
1.3	G1 - 1292 cc	78 → 86		VKPC 83206
1.4	Y - 1442 cc	78 → 86		VKPC 83206
1.6	J2 - 1592 cc	78 → 86		VKPC 83206
1.9 DIESEL	XUD9 - 1905 cc	80 → 86		VKPC 83401

MATRA BAGHEERA

1.3	G4 - 1294 cc	75 → 80		VKPC 83206
1.4	X5Y4 - 1442 cc	75 → 80		VKPC 83206

www.bergab.ru Берг АБ bergab@ya.ru Тел. (495)-228-06-21, факс (495) 223-3071

TALBOT .../...

MATRA MURENA

1.6	X55J2 - 1592 cc	81 → 84	**VKPC 83206**	
2.2	N2 - 2156 cc	81 → 84	VKPC 83411	

MATRA RANCHO

1.4	X3Y2 - 1442 cc	77 → 84	**VKPC 83206**	
1.6	X55J2 - 1592 cc	77 → 84	**VKPC 83206**	

SAMBA

1.0	XV - 954 cc	82 → 86	**VKPC 83200**	**VKPA 83200**
1.1	XW - 1124 cc	82 → 86	**VKPC 83200**	**VKPA 83200**
1.2	XZ - 1219 cc	82 → 86	**VKPC 83200**	**VKPA 83200**
1.3	XY - 1360 cc	82 → 86	**VKPC 83200**	**VKPA 83200**

SIMCA 1100 VF1/2

0.9	352 - 944 cc	67 → 80	**VKPC 83206**	
1.1	350/350S - 1118 cc	67 → 80	**VKPC 83206**	
1.2	G1 - 1204 cc	67 → 80	**VKPC 83206**	
1.3	G2/G4 - 1294 cc	67 → 80	**VKPC 83206**	

SIMCA 1307/1308/1309

1307 1.3	G1/G4 - 1294 cc	75 → 79	**VKPC 83206**	
1308 1.4	Y2 - 1442 cc	75 → 79	**VKPC 83206**	
1309 1.6	J2 - 1592 cc	75 → 79	**VKPC 83206**	

SIMCA 1510

1510 1.3	G1D - 1294 cc	79 → 83	**VKPC 83206**	
1510 1.4	Y2/D - 1442 cc	79 → 83	**VKPC 83206**	
1510 1.6	J2/J2A - 1592 cc	79 → 83	**VKPC 83206**	

SUNBEAM

1.0	C930 - 928 cc	76 → 82	VKPC 83417	
1.3	JB 1300 - 1295 cc	76 → 82	VKPC 83417	
1.6	TB/HA 1600 - 1598 cc	76 → 82	VKPC 83417	

SOLARA

1.3	G1D - 1294 cc	80 → 86	**VKPC 83206**	
1.4	Y2 - 1442 cc	80 → 86	**VKPC 83206**	
1.6	Y1/Y2/Y2A - 1592 cc	80 → 86	**VKPC 83206**	

TAGORA

2.2	N2 - 2156 cc	81 → 84	VKPC 83411	

TOYOTA

AVENSIS

1.8i 16V (AT-221)	7A-FE - 1762 cc	10/97 →		**VKPA 91441**
2.0i 16V (ST-220)	3S-FE - 1998 cc	10/97 →		VKPA 91602
2.0 TURBO DIESEL (CT-220)	2C-T - 1974 cc	10/97 →	**VKPC 91405**	

www.bergab.ru Берг АБ bergab@ya.ru Тел. (495)-228-06-21, факс (495) 223-3071

BLIZZARD				
2.4 DIESEL (LD-20, LD-21)	2L-T - 2446 cc	05/84 → 02/90	**VKPC 91606**	
CAMRY				
1.6 (TA-41)	12T-U - 1588 cc	01/80 → 02/82	VKPC 91403	
1.8 (TA-46)	13T-U - 1770 cc	01/80 → 02/82	VKPC 91403	
1.8 (TA-57)	3T-EU - 1770 cc	08/80 → 02/82	VKPC 91403	
1.8 (SV-10, SV-20)	1S - 1832 cc	03/82 → 08/88	**VKPC 91404**	
1.8 (SV-22, SV-30, SV-40)	4S-F - 1838 cc	08/88 → 94	**VKPC 91613**	
2.0 (RA-56)	21R-U - 1972 cc	08/80 → 08/84	VKPC 91616	
2.0 (SV-11)	2S-E - 1995 cc	03/82 → 07/86	**VKPC 91404**	
2.0 i.e (SV-12, SV-21)	3S-G - 1998 cc	06/84 → 07/90	**VKPC 91604**	
2.0 i.e (SV-21, SV-25)	3S-F - 1998 cc	08/86 → 07/90	**VKPC 91613**	
2.0 i.e (SV-32, SV-33, SV-35)	3S-F - 1998 cc	07/90 → 94	**VKPC 91613**	
2.0 i.e (SV-41, SV-42, SV-43)	3S-F - 1998 cc	07/90 → 94	**VKPC 91613**	
2.0 i.e (SV-32, SV-33)	3S-GE - 1998 cc	07/90 → 94	**VKPC 91604**	
2.2 (SXV-10)	5S-FE - 2163 cc	06/91 →	**VKPC 91613**	
1.8 DIESEL (CV-10)	1C-TL - 1839 cc	08/83 → 10/86	**VKPC 91405**	
2.0 DIESEL (CV-20)	2C-T - 1974 cc	08/86 → 07/90	**VKPC 91405**	
2.0 DIESEL (CV-30)	2C-T - 1974 cc	07/90 → 94	**VKPC 91405**	
CARINA				
1.5 (AT-150)	3A-L - 1453 cc	05/84 → 04/88	**VKPC 91409**	**VKPA 91409**
1.5 (AT-170)	5A-F - 1453 cc	05/88 → 11/92	**VKPC 91415**	
1.5 (AK-67)	5K-J - 1500 cc	08/83 → 04/88	VKPC 91410	
1.5 (ET-196V)	5E-FE - 1496 cc	11/92 → 94	**VKPC 91413**	
1.6 (TA-31)	12T - 1588 cc	01/77 → 08/83	VKPC 91403	
1.6 (TA-40, TA-45)	2T-G - 1588 cc	08/77 → 08/81	VKPC 91412	
1.6 (TA-67V)	2T-J - 1588 cc	09/81 → 08/83	VKPC 91403	
1.6 (TA-41)	12T-J - 1588 cc	08/77 → 08/81	VKPC 91403	
1.6 (TA-49)	12T-J - 1588 cc	08/79 → 08/81	VKPC 91403	
1.6 (TA-61)	2T-G - 1587 cc	09/81 → 05/83	VKPC 91412	
1.6 (AA-63)	4A-G - 1588 cc	05/83 → 07/85	VKPC 91407	
1.6 (AT-160)	4A-G - 1587 cc	08/85 → 04/88	**VKPC 91414**	
II 1.6 (AT-171, AT-175)	4A-FE - 1587 cc	05/88 → 11/92	**VKPC 91415**	
II 1.6 (AT-171)	4A-GE - 1587 cc	05/88 → 08/92	**VKPC 91414**	
E 1.6 (AT-190)	4A-FE - 1587 cc	02/92 → 11/94	**VKPC 91416**	
1.6 i.e (AT-151)	4A-E - 1587 cc	05/84 → 04/88	**VKPC 91409**	**VKPA 91409**
E 1.8 (AT-191)	7A-FE - 1762 cc	11/94 →		**VKPA 91441**
1.8 (TA-32)	3T-U - 1770 cc	03/77 → 07/77	VKPC 91403	
1.8 (TA-63)	3T-EU - 1770 cc	09/81 → 08/83	VKPC 91403	
1.8 (TA-46)	13T-U - 1770 cc	11/77 → 08/81	VKPC 91403	
1.8 (TA-42, TA-47)	3T-(E)U - 1770 cc	08/77 → 01/88	VKPC 91403	
1.8 (SA-60)	1S-U - 1832 cc	09/81 → 04/88	**VKPC 91404**	
1.8 (ST-150, ST-160)	1S - 1832 cc	05/84 → 08/89	**VKPC 91404**	
1.8 (ST-163, ST-170, ST-180, ST-181)	4S-FI - 1838 cc	08/87 → 09/93	**VKPC 91613**	
1.8 (ST-190, ST-200, ST-201)	4S-FE - 1838 cc	08/92 → 94	**VKPC 91613**	
1.8 (ST-190G)	4S-FE - 1838 cc	11/92 → 94	**VKPC 91613**	
2.0 (RA-46)	21R-U - 1972 cc	08/78 → 08/84	VKPC 91616	
2.0 (ST-162)	3S-GEL - 1998 cc	08/85 → 08/89	**VKPC 91604**	
2.0 (ST-162)	3S-FE - 1998 cc	08/87 → 08/89	**VKPC 91613**	
2.0 (ST-182, ST-183)	3S-GE - 1998 cc	09/89 → 09/93	**VKPC 91604**	
2.0 (ST-182, ST-183)	3S-FE - 1998 cc	09/89 → 09/93	**VKPC 91613**	
2.0 (ST-195)	3S-FE - 1998 cc	08/92 → 94	**VKPC 91613**	
2.0 (ST-202, ST-203)	3S-FE - 1998 cc	09/93 → 94	**VKPC 91613**	
2.0 (ST-182, ST-183, ST-202, ST-203)	3S-FE - 1998 cc	09/89 → 94	**VKPC 91613**	
2.0 (ST-191G, ST-195G)	3S-FE - 1998 cc	11/92 → 94	**VKPC 91613**	
2.0 (ST-182, ST-183)	3S-GE - 1998 cc	09/89 → 09/93	**VKPC 91604**	
II 2.0 i.e (ST-171)	3S-FE - 1998 cc	12/87 → 11/89	**VKPC 91613**	
II 2.0 i.e (ST-171)	3S-FE - 1998 cc	11/89 →	**VKPC 91613**	
E 2.0 i.e (ST-191)	3S-FE - 1998 cc	02/92 → 01/96	**VKPC 91613**	
1.8 DIESEL (CA-60, CA-67)	1C - 1839 cc	02/82 → 04/88	**VKPC 91405**	
2.0 DIESEL (CT-150)	2C - 1974 cc	02/82 → 04/88	**VKPC 91405**	

www.bergab.ru Берг АБ bergab@ya.ru Тел. (495)-228-06-21, факс (495) 223-3071

www.bergab.ru Берг АБ bergab@ya.ru Тел. (495)-228-06-21, факс (495) 223-3071

TOYOTA .../...

II 2.0 DIESEL (CT-170, CT-176)	2C - 1974 cc	12/87 → 11/92		**VKPC 91405**	
E 2.0 DIESEL (CT-190)	2C - 1974 cc	02/92 →		**VKPC 91405**	
2.0 DIESEL (CT-190, CT-195)	2C - 1974 cc	02/92 → 94		**VKPC 91405**	
2.0 DIESEL (CT-190G, CT-196V, CT-198V)	2C - 1974 cc	11/92 → 94		**VKPC 91405**	

CELICA

1.6 (TA-41)	12T-U - 1588 cc	08/77 → 06/81		VKPC 91403	
1.6 (TA-40, TA-45, TA-55)	2T-G - 1588 cc	08/77 → 06/81		VKPC 91412	
1.6 (TA-61)	2T-G - 1588 cc	07/81 → 08/83		VKPC 91412	
1.6 (AA-63)	4A-GE - 1587 cc	08/83 → 07/85		VKPC 91407	**VKPA 91407**
1.6 (AT-160)	4A-GE - 1587 cc	08/85 → 08/87		**VKPC 91414**	
1.6 (AT-160)	4A-L - 1587 cc	08/87 → 08/89		**VKPC 91409**	**VKPA 91409**
1.6 (AT-180)	4A-FE - 1587 cc	09/89 →		**VKPC 91415**	
1.8 (AT-200)	7A-FE - 1762 cc	11/93 →			**VKPA 91441**
1.8 (TA-42)	3T-U - 1770 cc	08/77 → 06/81		VKPC 91403	
1.8 (TA-46)	13T-U - 1770 cc	11/77 → 06/81		VKPC 91403	
1.8 (TA-47, TA-63)	3T-EU - 1770 cc	08/77 → 08/83		VKPC 91403	
1.8 (TA-63)	3T-GTE - 1770 cc	10/82 → 07/85		VKPC 91412	
1.8 (TA-64)	4TG - 1838 cc	10/82 → 07/85		VKPC 91412	
1.8 (SA-60)	1S - 1832 cc	07/81 → 07/85		**VKPC 91404**	
1.8 (ST-160)	1S - 1832 cc	08/85 → 08/89		**VKPC 91404**	
1.8 (ST-162, ST-163)	4S-F - 1838 cc	05/88 → 08/89		**VKPC 91613**	
2.0 (RA-46, RA-56, RA-60, RA-61)	21R-U - 1972 cc	08/81 → 08/84		VKPC 91616	
2.0 (RA-46, RA-56, RA-60, RA-61)	21R-U - 1972 cc	08/84 → 07/85		VKPC 91617	
2.0 (SA-63)	2SC - 1955 cc	08/83 → 08/84		**VKPC 91404**	
2.0 (ST-162, ST-165)	3S-GE - 1998 cc	08/85 → 08/89		**VKPC 91604**	
2.0 (ST-162)	3S-FE - 1998 cc	08/87 → 08/89		**VKPC 91613**	
2.0 (ST-182, ST-183, ST-202, ST-203)	3S-FE - 1998 cc	09/89 → 94		**VKPC 91613**	
2.0 (ST-165, ST-185)	3S-GTE - 1998 cc	09/89 → 09/93		**VKPC 91604**	
2.0 (ST-182, ST-183)	3S-GE - 1998 cc	09/89 → 09/93		**VKPC 91604**	
2.0i 16V	3SGE - 1998 cc	93 →		**VKPC 91442**	
2.2 (ST-184)	5SFE - 2163 cc	09/89 →		**VKPC 91613**	
2.2 (RA)	20R-U - 2200 cc	08/80 → 07/84		VKPC 91617	
2.4 (RA-60)	22R - 2366 cc	08/80 → 08/84		VKPC 91616	
2.4 (RA)	22R - 2366 cc	08/84 → 07/85		VKPC 91617	
2.4 (TA-60)	2T - 2438 cc	08/81 → 07/85		VKPC 91403	

COROLLA / SPRINTER

1.2 (KE-36)	3K.HJ - 1166 cc	05/78 → 08/79		**VKPC 91402**	
1.3 (KE-55, KE-65)	4K-U - 1295 cc	10/77 → 02/79		**VKPC 91402**	
1.3 (KE-70, KE-71, KE-73)	4K-U - 1295 cc	10/77 → 07/83		**VKPC 91402**	
1.3 (KE-73)	4K-U - 1295 cc	07/83 → 08/87		VKPC 91419	
II 1.3 (AL-20)	2A-U - 1295 cc	05/82 → 04/86		**VKPC 91431**	
II 1.3 (EL-30)	2E/3E - 1295 cc	05/86 → 09/90		**VKPC 91413**	
II 1.3 (EL-41)	4E-FE - 1295 cc	09/90 → 94		**VKPC 91413**	
1.3 (AE-80)	2A-LU - 1295 cc	05/83 → 04/87		**VKPC 91409**	**VKPA 91409**
1.3 (EE-80)	2E-LU - 1295 cc	05/85 → 04/87		**VKPC 91413**	
1.3 (EE-90, EE-96, EE-97)	2E - 1295 cc	05/87 → 08/89		**VKPC 91413**	
1.3 (EE-90, EE-96, EE-97)	2E - 1295 cc	08/89 →		**VKPC 91413**	
1.3 (EE-100, EE-101, EE-102, EE-106)	2E - 1295 cc	09/91 →		**VKPC 91417**	**VKPA 91417**
1.3 (EE-110, EE-111)	2E - 1295 cc	04/97 →		**VKPC 91417**	**VKPA 91417**
1.3 (EE-100, EE-101, EE-102, EE-106)	4E-FE - 1331 cc	09/91 →		**VKPC 91417**	**VKPA 91417**
1.3 (EE-110, EE-111)	4E-FE - 1331 cc	04/97 →		**VKPC 91417**	**VKPA 91417**
1.4 (TE-50, TE-60)	T.U - 1400 cc	01/77 → 02/79		VKPC 91403	
1.5 (AE-81)	3A-LU - 1453 cc	05/83 → 04/87		**VKPC 91409**	
II 1.5 (AL-21, AL-25)	3A-U/HU.SU - 1452 cc	05/82 → 04/86		**VKPC 91431**	VKPA 91431
II 1.5 (EL-31)	3ETE - 1452 cc	05/86 → 09/90		**VKPC 91431**	
II 1.5 (EL-43, EL-45)	5E-FE - 1452 cc	09/90 → 94		**VKPC 91431**	
1.5 (EE-80)	3E - 1456 cc	08/87 →		**VKPC 91413**	

www.bergab.ru Берг АБ bergab@ya.ru Тел. (495)-228-06-21, факс (495) 223-3071

www.bergab.ru Берг АБ bergab@ya.ru Тел. (495)-228-06-21, факс (495) 223-3071

1.5 (EE-98, EE-107, EE-108)	3E - 1456 cc	05/87 → 01/94	**VKPC 91413**	
1.5 (AE-91)	5A-F/FE/FHE - 1453 cc	05/87 → 05/92	**VKPC 91415**	
1.5 (EE-103, EE-104)	5E-FE - 1456 cc	09/91 → 01/94	**VKPC 91413**	
1.6 (TE-73V, TE-74V)	12T-J - 1588 cc	08/79 → 08/83	VKPC 91403	
1.6 (TE-51, TE-55, TE-61, TE-65)	2T-GEU - 1588 cc	01/77 → 02/79	VKPC 91412	
1.6 (TE-52, TE-62)	12T - 1588 cc	01/77 → 08/77	VKPC 91403	
1.6 (TE-56, TE-66)	12T.U - 1588 cc	08/77 → 02/79	VKPC 91403	
1.6 (TE-71)	2T-GEU - 1588 cc	03/79 → 04/83	VKPC 91412	
1.6 (AE-25, AE-72, AE-82, AE-92)	4A-GE - 1587 cc	10/84 → 05/92	**VKPC 91414**	
1.6 (AE-82)	4A-ELU - 1587 cc	05/83 → 04/87	**VKPC 91409**	**VKPA 91409**
1.6 (AE-86)	4A-GEU - 1587 cc	05/83 → 04/87	VKPC 91407	**VKPA 91407**
1.6 (AE-92, AE-95)	4A-F - 1587 cc	05/87 → 94	**VKPC 91415**	
1.6 (AE-101)	4A-GZE - 1587 cc	06/91 → 94	**VKPC 91414**	
1.6 (AE-101)	4A-FE - 1587 cc	05/92 → 01/96	**VKPC 91416**	
1.6 (AE-111)	4A-FE - 1587 cc	04/97 →	**VKPC 91416**	
1.8 (AE-102, AE-103)	7A-FE - 1762 cc	11/92 →		**VKPA 91441**
1.8 (AE-115)	7A-FE - 1762 cc	04/97 →		**VKPA 91441**
1.8 (TE-70)	13T-U - 1770 cc	08/79 → 08/81	VKPC 91403	
1.8 (TE-74)	12T-J - 1770 cc	08/81 → 08/83	VKPC 91403	
1.8 DIESEL (CE-70, CE-71, CE-72)	1C - 1839 cc	02/82 → 04/83	**VKPC 91405**	
1.8 DIESEL (CE-80)	1C-L - 1839 cc	05/83 → 04/87	**VKPC 91405**	
1.8 DIESEL (CE-90, CE-96, CE-97)	1C - 1839 cc	05/87 → 08/91	**VKPC 91405**	
2.0 DIESEL (CE-95)	2C - 1974 cc	01/89 → 05/90	**VKPC 91405**	
2.0 DIESEL (CE-100, CE-104, CE-106, CE-108, CE-109)	2C - 1974 cc	09/91 →	**VKPC 91405**	
2.0 DIESEL (CE-110)	2C - 1974 cc	04/97 →	**VKPC 91405**	

CORONA

1.5 (AT-150)	3A-LU - 1453 cc	10/83 → 11/87	**VKPC 91409**	**VKPA 91409**
1.5 (ET-176)	3E - 1453 cc	12/87 → 11/92	**VKPC 91413**	
1.5 (AT-170)	5A-F(E) - 1453 cc	12/87 → 02/92	**VKPC 91415**	
1.6 (RT-100, RT-120)	12R-U - 1587 cc	11/75 → 08/78	**VKPC 91424**	
1.6 (RT-130)	12R-U - 1587 cc	02/79 → 08/81	**VKPC 91424**	
1.6 (AT-141)	4A-G - 1587 cc	10/83 → 10/85	VKPC 91407	**VKPA 91407**
1.6 (AT-160)	4A-G - 1587 cc	08/85 → 08/89	**VKPC 91414**	
1.6 (TT-125, TT-130)	12T-U - 1588 cc	08/77 → 12/81	VKPC 91403	
1.6 (TT-138, TT-147)	12T-J - 1588 cc	08/77 → 10/83	VKPC 91403	
1.6 (AT-141)	4A-GEU - 1588 cc	10/83 → 08/85	VKPC 91407	
1.6 (AT-160)	4A-GELU - 1588 cc	08/85 → 08/87	**VKPC 91414**	
1.6 (AT-15)	3A-LU,4A-ELU - 1588 cc	07/86 →		**VKPA 91409**
1.6 (AT-175)	4A-FE - 1588 cc	08/88 → 02/92	**VKPC 91415**	
1.8 (TT-121)	3T-U - 1770 cc	03/77 → 08/78	VKPC 91403	
1.8 (TT-121)	3T-U - 1770 cc	03/77 → 08/78	VKPC 91403	
1.8 (TT-132, TT-142)	3T-EU - 1770 cc	09/78 → 10/83	VKPC 91403	
1.8 (TT-126, TT-131)	13T-U - 1770 cc	11/77 → 12/81	VKPC 91403	
1.8 (ST-140, ST-150, ST-160)	1S-U/LU/ELU - 1832 cc	01/82 → 08/89	**VKPC 91404**	
1.8 (YT-140)	2Y-PU - 1838 cc	02/89 → 94	**VKPC 91428**	
1.8 (ST-163, ST-170, ST-180, ST-181)	4S-F - 1838 cc	12/87 → 09/93	**VKPC 91613**	
1.8 (ST-190, ST-200, ST-201)	4S-FE - 1838 cc	02/92 → 94	**VKPC 91613**	
2.0 (RT-133)	21R-U - 1972 cc	09/78 → 08/84	VKPC 91616	
2.0 (ST-162, ST-171, ST-176)	3S-FE - 1998 cc	08/87 → 02/92	**VKPC 91613**	
2.0 (ST-162)	3SG - 1998 cc	08/85 → 08/89	**VKPC 91604**	
2.0 (ST-171)	3S-GE - 1998 cc	12/87 → 11/89	**VKPC 91604**	
2.0 (ST-191, ST-195)	3S-FE - 1998 cc	02/92 → 94	**VKPC 91613**	
2.4	22R - 2366 cc	08/84 → 07/85	VKPC 91617	
1.8 DIESEL (CT-140, CT-147)	1C - 1839 cc	01/82 → 05/90	**VKPC 91405**	
2.0 DIESEL (CT-141, CT-150, CT-170, CT-176)	2C - 1974 cc	02/82 → 05/90	**VKPC 91405**	

CRESSIDA

1.8 (TX-30)	3T-U - 1770 cc	04/77 → 03/79	VKPC 91403	
1.8 (TX-40)	13T-U - 1770 cc	11/77 → 08/80	VKPC 91403	
1.8 (TX-50, TX-60)	13T.J - 1770 cc	03/80 → 08/82	VKPC 91403	
1.8 (TX-47, TX-67)	13T.J - 1770 cc	12/79 → 07/84	VKPC 91403	
1.8 (SX-60, SX-70)	1S-U - 1770 cc	08/82 → 08/88	**VKPC 91404**	

www.bergab.ru Берг АБ bergab@ya.ru Тел. (495)-228-06-21, факс (495) 223-3071

www.bergab.ru Берг АБ bergab@ya.ru Тел. (495)-228-06-21, факс (495) 223-3071

TOYOTA .../...

1.8 (SX-80)	4S-FI - 1770 cc	06/88 → 94	**VKPC 91613**	
1.8 (SX-60, YX-70, YX-76)	2Y-PU.J.E - 1812 cc	08/82 → 94	**VKPC 91428**	
2.0 (RX-40, RX-41, RX-60)	21R-U - 1972 cc	08/78 → 08/84	VKPC 91616	
2.0 (YX-80)	3Y-P - 1998 cc	08/88 → 94	**VKPC 91428**	
2.4 DIESEL (LX-65, LX-70, LX-76)	2L - 2446 cc	08/82 → 08/88	**VKPC 91606**	
2.4 DIESEL (LX-76, LX-80, LX-90)	2L - 2446 cc	08/88 → 94	**VKPC 91607**	
CROWN				
2.0 (YS-120, YS-130)	3Y-PU/PE - 1998 cc	08/83 → 94	**VKPC 91428**	
2.2 (YS-132)	4Y - 2237 cc	08/89 →	**VKPC 91428**	
2.4 DIESEL (LS-111, LS-120, LS-126, LS-130, LS-131, LS-136)	2L-T(E/EH) - 2446 cc	05/82 → 08/89	**VKPC 91606**	
2.4 TURBO DIESEL (LS-130, LS-131, LS-136, LS-141)	2L-T(E/EH) - 2446 cc	08/89 → 94	**VKPC 91607**	
LANDCRUISER				
2.4 (RN-70, RN-73)	22R - 2366 cc	01/90 →	VKPC 91617	
2.4 DIESEL (LJ-70, LJ-73, LJ-91)	2L - 2446 cc	11/84 → 01/90	**VKPC 91606**	
2.4 TURBO DIESEL (LJ-70, LJ-71, LJ-73, LJ-77, LJ-78)	2L-TE - 2446 cc	01/90 → 01/95	**VKPC 91607**	
MODEL-F				
1.8 (YR-20)	2Y - 1812 cc	11/82 →	**VKPC 91428**	
2.0 (YR-21)	3Y - 1998 cc	11/82 →	**VKPC 91428**	
2.3 (YR-22, YR-31)	4YEC - 2237 cc	11/82 →	**VKPC 91428**	
2.0 DIESEL (CR-21)	2C - 1974 cc	05/83 →	**VKPC 91405**	
MR II				
1.5 (AW-10)	3A-LU - 1453 cc	06/84 → 10/89	**VKPC 91409**	
1.6 (AW-11)	4A-G - 1587 cc	06/84 → 12/89	**VKPC 91414**	
2.0 (SW-20)	3SG - 1998 cc	12/89 → 11/93	**VKPC 91604**	
2.0 (SW-20)	3SF - 1998 cc	12/89 → 11/93	**VKPC 91613**	
PASEO				
1.5 (EL-54)	5E-FE - 1497 cc	08/95 →	**VKPC 91417**	**VKPA 91417**
PICNIC				
2.0 (SXM-10)	3S-FE - 1998 cc	09/96 →	**VKPC 91613**	
PREVIA				
2.4 (TRC-10, TRC-11, TRC-20, TRC-21)	2TZ-FE - 2438 cc	05/90 →		**VKPA 91615**
PUBLICA				
1.2 (KP-39)	4K-J - 1295 cc	01/82 → 09/85	**VKPC 91427**	
1.2 (KP-39)	4K-J - 1295 cc	09/85 → 08/88	VKPC 91419	
RAV 4				
2.0 (SXA-10, SXA-11)	3S-FE - 1998 cc	04/94 →	**VKPC 91613**	

www.bergab.ru Берг АБ bergab@ya.ru Тел. (495)-228-06-21, факс (495) 223-3071

www.bergab.ru Берг АБ bergab@ya.ru Тел. (495)-228-06-21, факс (495) 223-3071

STARLET				
1.0 (KP-60, KP-70)	2K - 993 cc	02/78 → 09/84	**VKPC 91402**	
1.0 (EP-70)	1E - 999 cc	10/84 → 12/89	**VKPC 91417**	**VKPA 91417**
1.0 (EP-80)	1E - 999 cc	12/89 →	**VKPC 91417**	**VKPA 91417**
1.2 (KP-62)	3K-HJ - 1166 cc	10/78 → 01/82	**VKPC 91402**	
1.3 (KP-61)	4K-J/4K-U - 1295 cc	02/78 → 07/83	**VKPC 91402**	
1.3 (KP-61)	4K-U - 1295 cc	07/83 → 09/84	VKPC 91419	
1.3 (KP-61)	4K-EU - 1295 cc	08/82 → 09/84	VKPC 91419	
1.3 (EP-71, EP-76)	2E-ELU/LU/LJ - 1295 cc	10/84 → 12/89	**VKPC 91417**	**VKPA 91417**
1.3 (EP-81)	2E - 1295 cc	12/89 →	**VKPC 91417**	**VKPA 91417**
1.3 (EP-82, EP-85)	4E-F/FE/FTE - 1295 cc	12/89 → 94	**VKPC 91417**	
1.3 (EP-91)	4E-FE - 1331 cc	01/96 →	**VKPC 91413**	
1.5 DIESEL (NP-80)	1N - 1453 cc	12/89 →	VKPC 91201	
TERCEL				
1.3 (AL-11, AL-20)	2AU - 1295 cc	06/76 → 06/85	**VKPC 91431**	VKPA 91431
1.3 (EL-30)	2E - 1295 cc	05/86 → 09/90	**VKPC 91413**	
1.3 (EL-41)	4E-FE - 1295 cc	09/90 → 94	**VKPC 91413**	
1.5 (AL-10, AL-12)	1A-U/3A-U - 1452 cc	08/78 → 04/82	**VKPC 91431**	VKPA 91431
1.5 (AL-21, AL-25)	3A-U/HU.SU - 1452 cc	05/82 → 05/86	**VKPC 91431**	VKPA 91431
1.5 (EL-3)	2E - 1456 cc	05/86 → 12/89	**VKPC 91413**	
1.5 (EL-30, EL-31)	3E/3E-TE - 1456 cc	05/86 → 09/90	**VKPC 91413**	
1.5 (EL-43, EL-45)	5E-FE/FHE - 1456 cc	09/90 → 94	**VKPC 91413**	
1.5 (EL-42)	3EE - 1456 cc	09/90 → 08/92	**VKPC 91417**	**VKPA 91417**

TOYOTA COMMERCIAL

DYNA				
1.8 (YY-50, YH-81)	1Y - 1626 cc	08/85 → 08/87	**VKPC 91428**	
1.8 (YU-81, YY-81, YH-81)	2Y - 1812 cc	09/84 →	**VKPC 91428**	
100 1.8 (YH-81)	2Y - 1812 cc	08/87 →	**VKPC 91428**	
2.0 (YU-60, YU-70, YU-80)	3Y-P - 1998 cc	09/84 → 08/87	**VKPC 91428**	
150 2.0 (YY-52, YY-61)	3Y - 1998 cc	08/87 → 08/88	**VKPC 91428**	
150 2.0 (YY-211)	3Y - 1998 cc	05/95 →	**VKPC 91428**	
2.2 (RB-11, RB-12)	20R - 2200 cc	08/78 → 08/84	VKPC 91616	
2.4 (RB-13)	22R - 2366 cc	08/80 → 08/84	VKPC 91616	
100 2.4 DIESEL (LY-50, LY-60, LH-80)	2L - 2446 cc	08/85 → 08/88	**VKPC 91606**	
100 2.4 DIESEL (LH-80)	2L - 2446 cc	08/88 →	**VKPC 91607**	
150 2.8 DIESEL (LY-61)	3L - 2779 cc	08/88 → 94	**VKPC 91607**	
150 2.8 DIESEL (LY-211)	3L - 2779 cc	05/95 →	**VKPC 91607**	
HIACE				
1.6 (RH-11, RH-13, RH-16, RH-20, RH-30, RH-40)	12R/12R-J - 1587 cc	02/77 → 12/79	**VKPC 91424**	
1.8 (YH-50, YH-60, YH-81)	2Y - 1812 cc	12/82 → 08/89	**VKPC 91428**	
1.8 (YH-80)	1Y-J - 1812 cc	08/85 → 08/87	**VKPC 91428**	
2.0 (YH-51, YH-52, YH-57, YH-61, YH-62, YH-71)	3Y-(P/J/U) - 1998cc	12/82 → 08/89	**VKPC 91428**	
2.8 (LH-102, LH-108, LH-112, LH-118, LH-125)	3L - 2779 cc	08/89 →	**VKPC 91607**	
2.2 DIESEL (LH-24)	L - 2188 cc	11/82 → 07/85	**VKPC 91606**	
2.2 DIESEL (LH-50, LH-60, LH-70)	L - 2188 cc	12/82 → 08/89	**VKPC 91606**	
2.4 DIESEL (LH-51, LH-56, LH-61, LH-66, LH-71, LH-80, LH-85)	2L - 2446 cc	12/82 → 08/89	**VKPC 91606**	
2.4 DIESEL (LH-80, LH-85, LH-90, LH-95)	2L - 2446 cc	10/89 → 94	**VKPC 91607**	
2.4 DIESEL (LH-102, LH-108, LH-112, LH-118)	2L - 2446 cc	08/89 → 08/93	**VKPC 91607**	
2.4 DIESEL (LH-100, LH-110, LH-120, LH-140)	2L - 2446 cc	08/89 → 08/93	**VKPC 91607**	
2.4 DIESEL (LXH-12)	2L - 2446 cc	08/95 →	**VKPC 91607**	

www.bergab.ru Берг АБ bergab@ya.ru Тел. (495)-228-06-21, факс (495) 223-3071

www.bergab.ru Берг АБ bergab@ya.ru Тел. (495)-228-06-21, факс (495) 223-3071

TOYOTA COMMERCIAL .../...

2.8 DIESEL (LH-103, LH-107, LH-109, LH-113, LH-115)	3L - 2779 cc	08/89 → 94	**VKPC 91607**
2.8 DIESEL (LH-117, LH-119, LH-123, LH-125, LH-129)	3L - 2779 cc	08/89 → 94	**VKPC 91607**

HILUX / 4-RUNNER

1.6 (RN-20, RN-25)	12R-J - 1587 cc	11/75 → 07/78	**VKPC 91424**
1.6 (RN-30, RN-40)	12R-J - 1587 cc	07/78 → 12/79	**VKPC 91424**
1.8 (YN-50, YN-55)	1Y - 1812 cc	08/83 →	**VKPC 91428**
1.8 (YN-51, YN-56, YN-80, YN-85, YN-90)	2Y - 1812 cc	08/83 →	**VKPC 91428**
2.0 (YN-52, YN-56, YN-57, YN-60, YN-61, YN-65, YN-81)	3Y - 1998 cc	08/83 →	**VKPC 91428**
2.0 (YN-86, YN-100, YN-105, YN-107, YN-136)	3Y-(J.P.E) - 1998 cc	11/83 → 94	**VKPC 91428**
2.3 (YN-58, YN-62, YN-63, YN-67, YN-106, YN-110)	4Y - 2237 cc	08/83 →	**VKPC 91428**
2.4 (RN-50, RN-55, RN-61)	22R - 2366 cc	01/86 → 03/89	VKPC 91617
2.4 (RN-106, RN-110)	22R - 2366 cc	08/88 →	VKPC 91617
3.0 (VZN-130)	3VZ-E - 2959 cc	08/89 → 08/92	**VKPC 91804**
2.4 DIESEL (LN-51, LN-56, LN-60, LN-61, LN-65)	2L - 2446 cc	08/83 → 01/90	**VKPC 91606**
2.4 DIESEL (LN-80, LN-85, LN-90, LN-105, LN-110, LN-130)	2L - 2446 cc	08/88 → 08/94	**VKPC 91607**
2.8 DIESEL (LN-81, LN-86, LN-100, LN-106)	3L - 2779 cc	09/88 → 94	**VKPC 91607**

LITEACE

1.3 (KM-11, KM-20, KM-21)	4K-J - 1290 cc	10/79 → 08/88	**VKPC 91427**
1.3 (KM-35)	4K-J - 1290 cc	09/85 → 10/92	**VKPC 91427**
1.3 (KM-50)	4K-J - 1290 cc	10/86 → 01/92	**VKPC 91427**
1.4 (KM-30, KM-31, KM-36, KM-51)	4KU - 1407 cc	09/85 →	**VKPC 91427**
1.5 (KM-30, KM-31, KM-36)	5K-J/U - 1486 cc	10/85 → 01/92	**VKPC 91427**
1.5 (KM-51)	5K-J - 1486 cc	10/86 → 94	**VKPC 91427**
1.5 (KR-21, KR-27)	5K - 1486 cc	01/92 →	**VKPC 91427**
1.6 (YM-20, YM-25)	1Y-J - 1626 cc	10/82 → 09/86	**VKPC 91428**
1.8 (TM-20G)	13T-U - 1770 cc	10/79 → 10/82	VKPC 91403
1.8 (YM-20, YM-25)	1Y-J - 1812 cc	10/82 →	**VKPC 91428**
1.8 (YM-21, YM-30, YM-31)	2Y-(U/J) - 1812 cc	10/82 → 01/92	**VKPC 91428**
1.8 (YM-55, YM-60)	2Y-(U) - 1812 cc	10/86 → 94	**VKPC 91428**
2.0 (YM-40)	3Y-U - 1998 cc	09/85 → 01/92	**VKPC 91428**
2.3 (YR-22, YR-29)	4YE - 2237 cc	01/92 →	**VKPC 91428**
1.8 DIESEL (CM-20, CM-25, CM-35)	1C - 1839 cc	10/82 → 08/88	**VKPC 91405**
1.8 DIESEL (CM-50, CM-60)	1C - 1839 cc	10/86 → 12/89	**VKPC 91405**
2.0 DIESEL (CM-26, CM-30, CM-36, CM-40, CM-41)	2C-T - 1974 cc	08/85 → 01/92	**VKPC 91405**
2.0 DIESEL (CM-51, CM-52, CM-55, CM-60, CM-61, CM-65)	2C - 1974 cc	10/86 → 94	**VKPC 91405**
2.0 DIESEL (CR-21)	2C - 1974 cc	01/92 →	**VKPC 91405**

TOWNACE / MASTERACE / SPACE CRUISER

1.3 (KR-12)	4K-J - 1290 cc	10/79 → 10/82	**VKPC 91427**
1.3 (KR-26)	4K-J - 1290 cc	11/82 → 01/92	**VKPC 91427**
1.5 (KR-27)	5K-J - 1486 cc	12/89 → 94	**VKPC 91427**
1.6 (TR-11V)	2T-J - 1588 cc	10/79 → 10/82	VKPC 91403
1.6 (RR-10, RR-20)	12R-J - 1588 cc	08/78 → 11/79	**VKPC 91424**
1.6 (YM-25, YR-26V)	1Y-J - 1626 cc	11/82 → 08/88	**VKPC 91428**
1.8 (TR-15, TM-20)	13T-U - 1800 cc	08/78 → 10/82	VKPC 91403
1.8 (YM-25, YR-26V)	1Y-J - 1800 cc	11/82 → 08/88	**VKPC 91428**
1.8 (YR-20, YR-25, YR-28)	2Y-U/J - 1800 cc	11/82 → 94	**VKPC 91428**
2.0 (YR-21, YR-30, YR-36)	3Y-EU - 1998 cc	05/83 → 94	**VKPC 91428**

www.bergab.ru Берг АБ bergab@ya.ru Тел. (495)-228-06-21, факс (495) 223-3071

www.bergab.ru Берг АБ bergab@ya.ru Тел. (495)-228-06-21, факс (495) 223-3071

1.8 DIESEL (CM-20, CM-25, CR-26)	1C - 1839 cc	11/82 → 08/88		VKPC 91405	
2.0 DIESEL (CR-21, CR-27, CR-28, CR-30, CR-36, CR-37)	2C-T - 1974 cc	04/83 → 94		VKPC 91405	

TOYOACE

1.6 (RY-10, RY-12, RY-14)	12R - 1588 cc	11/75 → 02/79		VKPC 91424	
1.6 (RY-20)	12R - 1588 cc	03/79 → 01/82		VKPC 91424	
1.6 (RY-21)	12R - 1588 cc	01/82 → 07/85		VKPC 91424	
1.8 (YY-50)	1Y - 1800 cc	08/85 → 08/87		VKPC 91428	
1.8 (YY-51, YY-52)	2Y - 1800 cc	08/87 → 09/93		VKPC 91428	
2.0 (YU-60, YU-61, YU-70, YU-80, YY-52, YY-61)	3Y-P - 1998 cc	09/84 → 10/93		VKPC 91428	
2.0 (YU-60)	3Y-P - 1998 cc	10/93 → 94		VKPC 91428	
2.4 DIESEL (LY-21, LY-31)	2L - 2446 cc	08/83 → 07/85		VKPC 91606	
2.4 DIESEL (LY-50, LY-60)	2L - 2446 cc	08/85 → 08/88		VKPC 91606	
2.4 DIESEL (LY-50)	2L - 2446 cc	08/88 → 94		VKPC 91607	
2.8 DIESEL (LY-51, LY-61)	3L - 2779 cc	08/88 → 94		VKPC 91607	

VAUXHALL

ASTRA Mk I

1.0	10S - 993 cc	80 → 84	OHV	VKPC 85201	
1.2	12 - 1196 cc	80 → 84	OHV	VKPC 85201	
1.2	12 - 1196 cc	80 → 84	OHC	VKPC 85206	VKMC 05100
1.3	13SB - 1297 cc	80 → 84	OHC	VKPC 85202	VKMC 05103
1.6	16N - 1598 cc	80 → 84	→|Mot. 14054370	VKPC 85400	VKMC 05400
1.6	16N - 1598 cc	80 → 84	Auto.GBX, →|Mot. 14058655	VKPC 85400	VKMC 05400
1.6	16S/SH - 1598 cc	80 → 84	→|Mot. 14391114	VKPC 85400	VKMC 05400
1.6	16S/SH - 1598 cc	80 → 84	Auto.GBX, →|Mot. 14387789	VKPC 85400	VKMC 05400
1.6 DIESEL	16D/DA - 1598 cc	80 → 84		VKPC 85406	VKMC 05200
1.6 DIESEL	16D/DA - 1598 cc	80 → 84		VKPC 85408	VKMC 05201

ASTRA Mk II

1.2	12 - 1196 cc	85 → 91	OHV	VKPC 85201	
1.3	13SB - 1297 cc	85 → 91	OHC	VKPC 85202	VKMC 05103
1.4	14NV - 1389 cc	85 → 91	OHC	VKPC 85206	VKMC 05121
1.6	16LZ/16SV - 1598 cc	85 → 91		VKPC 85401	VKMC 05120
1.6	16N - 1598 cc	85 → 91	→|Mot. 14054370	VKPC 85400	VKMC 05400
1.6	16N - 1598 cc	85 → 91	Auto.GBX, →|Mot. 14058655	VKPC 85400	VKMC 05400
1.6	16S/16SH - 1598 cc	85 → 91	→|Mot. 14391114	VKPC 85400	VKMC 05400
1.6	16S/16SH - 1598 cc	85 → 91	Auto.GBX, →|Mot. 14387789	VKPC 85400	VKMC 05400
1.8	18SE - 1796 cc	85 → 91	L.H.D, →|Mot. 14237769	VKPC 85400	VKMC 05400
1.8	18SE - 1796 cc	85 → 91	L.H.D, |→Mot. 14237770	VKPC 85407	VKMC 05401
1.8	18SE - 1796 cc	85 → 91	R.H.D, →|Mot. 14056060	VKPC 85400	VKMC 05400
1.8	18SE - 1796 cc	85 → 91	R.H.D, |→Mot. 14056061	VKPC 85407	VKMC 05401
1.8	S18NV - 1796 cc	85 → 91		VKPC 85407	VKMC 05401
2.0	20NE/20SEH/C20NE - 1998 cc	85 → 91		VKPC 85407	VKMC 05401
1.6 DIESEL	16D/DA - 1598 cc	85 → 91		VKPC 85406	VKMC 05200
1.6 DIESEL	16D/DA - 1598 cc	85 → 91		VKPC 85408	

ASTRA Mk III

1.4	C14NZ/C14SE/14NV/14SE/X14NZ - 1389 cc	92 → 98		VKPC 85206	
1.4 16V	X14XE - 1389 cc	92 → 98		VKPC 85211	

www.bergab.ru Берг АБ bergab@ya.ru Тел. (495)-228-06-21, факс (495) 223-3071

www.bergab.ru Берг АБ bergab@ya.ru Тел. (495)-228-06-21, факс (495) 223-3071

VAUXHALL .../...

1.6	C16SE/16NZR/16SZR/C16NZ/X16SZ-1598 cc	92 → 98		VKPC 85206	
1.6 16V	X16XE - 1598 cc	92 → 98		VKPC 85211	
1.8	C18SEL/C18XE/C18XEL/X18XE - 1798 cc	92 → 98		VKPC 85611	
2.0	C20NE - 1998 cc	92 → 98	→|Mot. 14608700	VKPC 85407	VKMC 05401
2.0	C20NE - 1998 cc	92 → 98	|→Mot. 14608701	VKPC 85409	
2.0	C20XE - 1998 cc	92 → 98	→|Mot. 14142839	VKPC 85610	
2.0	C20XE - 1998 cc	92 → 98	|→Mot. 14142840	VKPC 85611	
2.0 16V	X20XEV - 1998 cc	92 → 98		VKPC 85611	
1.7 DIESEL	17D/17DR - 1699 cc	92 → 98	→|Mot. 14333451	VKPC 85408	VKMC 05201
1.7 DIESEL	17D/17DR - 1699 cc	92 → 98	|→Mot. 14333452	VKPC 85611	
1.7 DIESEL	17DTL - 1699 cc	92 → 98		VKPC 85611	
1.7 TURBO DIESEL	17TD - 1686 cc	92 → 98	→|Mot. 855805	VKPC 85404	
1.7 TURBO DIESEL	17TD - 1686 cc	92 → 98	|→Mot. 855806	VKPC 85620	

ASTRA Mk IV

1.4i 16V	X14XE - 1398 cc	98 →		VKPC 85211	
1.6i	X16SZR - 1598 cc	98 →		VKPC 85206	
1.6i 16V	X16XEL - 1598 cc	98 →		VKPC 85211	
2.0i 16V	X20XEV - 1998 cc	98 →		VKPC 85611	
1.7 TURBO DIESEL	17DT - 1686 cc	98 →		VKPC 85611	

BELMONT

1.3	13SB - 1297 cc	80 → 91	OHC	VKPC 85202	VKMC 05103
1.6	16N - 1598 cc	82 → 87	→|Mot. 14054370	VKPC 85400	VKMC 05400
1.6	16N - 1598 cc	82 → 87	Auto.GBX, →|Mot. 14058655	VKPC 85400	VKMC 05400
1.6	16S/SH - 1598 cc	82 → 87	→|Mot. 14391114	VKPC 85400	VKMC 05400
1.6	16S/SH - 1598 cc	82 → 87	Auto.GBX, →|Mot. 14387789	VKPC 85400	VKMC 05400
1.6	16LZ/SV - 1598 cc	86 → 91		VKPC 85401	VKMC 05120
1.8	18SE - 1796 cc	87 →	L.H.D, →|Mot. 14237769	VKPC 85400	VKMC 05400
1.8	18SE - 1796 cc	87 →	L.H.D, |→Mot. 14237770	VKPC 85407	VKMC 05401
1.8	18SE - 1796 cc	87 →	R.H.D, →|Mot. 14056060	VKPC 85400	VKMC 05400
1.8	18SE - 1796 cc	87 →	R.H.D, |→Mot. 14056061	VKPC 85407	VKMC 05401
1.8	S18NV - 1796 cc	86 → 91		VKPC 85407	VKMC 05401
1.6 DIESEL	16D/16DA - 1598 cc	82 → 86		VKPC 85406	VKMC 05200
1.6 DIESEL	16D/16DA - 1598 cc	86 → 89		VKPC 85408	VKMC 05201

CALIBRA

2.0	C20NE - 1998 cc	90 → 92		VKPC 85407	VKMC 05401
2.0	C20NE - 1998 cc	93 →		VKPC 85409	
2.0 16V	C20XE - 1998 cc	90 →	→|Mot. 14142839	VKPC 85610	
2.0 16V	C20XE - 1998 cc	90 →	|→Mot. 14142840	VKPC 85611	
2.0 TURBO 16V	C20LET - 1998 cc	92 →	→|Mot. 14002934	VKPC 85610	
2.0 TURBO 16V	C20LET - 1998 cc	92 →	|→Mot. 14002935	VKPC 85611	
2.5 V6	C25XE/X25XE - 2498 cc	94 →		VKPC 85613	

CARLTON Mk I

1.8	18S/18E/18NE - 1796 cc	82 → 11/86		VKPC 85400	VKMC 05400
2.0	20H - 1994 cc	78 → 82		VKPC 85600	
2.0	20H - 1994 cc	83 → 87			VKPA 85608
2.0 DIESEL	20D - 1998 cc	82 → 87	→|Mot. 102685		VKPA 85605
2.3 DIESEL	23D - 2260 cc	82 → 87	→|Mot. 55082		VKPA 85605

www.bergab.ru Берг АБ bergab@ya.ru Тел. (495)-228-06-21, факс (495) 223-3071

www.bergab.ru Берг АБ bergab@ya.ru Тел. (495)-228-06-21, факс (495) 223-3071

2.3 DIESEL	23D - 2260 cc	82 → 87	|→Mot. 121527		VKPA 85609

CARLTON Mk II

1.8	18S/18E/18NE - 1796 cc	12/86 →		**VKPC 85407**	**VKMC 05401**
2.0	E20E/C20NE - 1998 cc	12/86 →		**VKPC 85407**	**VKMC 05401**
2.2	H22E (CIH) - 2179 cc	84 →			**VKPA 85608**
2.4	C24NE - 2410 cc	12/86 →		**VKPC 85603**	
2.6	C26NE - 2594 cc	09/90 →		**VKPC 85603**	
3.0	C30LE - 2968 cc	03/87 →		**VKPC 85603**	
2.3 DIESEL	23YD - 2260 cc	87 → 94		**VKPC 85603**	
2.3 TURBO DIESEL	23TD - 2260 cc	10/91 → 94		**VKPC 85603**	

CAVALIER

Mk II 1.3	13S - 1297 cc	81 →	OHC	**VKPC 85202**	**VKMC 05103**
Mk III 1.4	14SV - 1398 cc	11/88 →		**VKPC 85401**	
Mk I 1.6	16N - 1598 cc	75 → 81		**VKPC 85600**	
Mk II - Mk III 1.6	16N - 1598 cc	82 → 87		**VKPC 85400**	**VKMC 05400**
Mk II - Mk III 1.6	16N - 1598 cc	87 →		**VKPC 85407**	**VKMC 05401**
Mk II - Mk III 1.6	16N - 1598 cc	82 → 87	Auto.GBX	**VKPC 85400**	**VKMC 05400**
Mk II - Mk III 1.6	16N - 1598 cc	87 →	Auto.GBX	**VKPC 85407**	**VKMC 05401**
Mk II - Mk III 1.6	16S/16SH - 1598 cc	81 → 87		**VKPC 85400**	**VKMC 05400**
Mk II - Mk III 1.6	16S/16SH - 1598 cc	87 →		**VKPC 85407**	**VKMC 05401**
Mk II - Mk III 1.6	16S/16SH - 1598 cc	82 → 87	Auto.GBX	**VKPC 85400**	**VKMC 05400**
Mk II - Mk III 1.6	16S/16SH - 1598 cc	87 →	Auto.GBX	**VKPC 85407**	**VKMC 05401**
Mk II - Mk III 1.6	16LZ/16SV - 1598 cc	87 →		**VKPC 85401**	
Mk III 1.6	C16NZ - 1598 cc	10/88 →	→|CH 02J22349	**VKPC 85401**	
Mk III 1.6	C16NZ - 1598 cc	10/88 →	|→CH 02J22350	**VKPC 85206**	
Mk II 1.8	18SE - 1796 cc	82 → 87		**VKPC 85400**	**VKMC 05400**
Mk II - Mk III 1.8	18SE - 1796 cc	87 →		**VKPC 85407**	**VKMC 05401**
Mk III 1.8	C18NZ - 1796 cc	10/88 → 93		**VKPC 85407**	**VKMC 05401**
Mk III 1.8	C18NZ - 1796 cc	93 →		**VKPC 85409**	
Mk I 1.9	19 - 1897 cc	75 → 81		**VKPC 85600**	
Mk I 2.0	20S/20E - 1979 cc	75 → 81		**VKPC 85600**	
Mk II - Mk III 2.0	20NE/20SEH/C20NE - 1998 cc	87 → 92		**VKPC 85407**	**VKMC 05401**
Mk III 2.0	C20NE - 1998 cc	93 →		**VKPC 85409**	
Mk III 2.0 16V	20XE/C20XE - 1998 cc	10/88 →		**VKPC 85610**	
Mk III 2.0 16V TURBO	C20LET/C20XE - 1998 cc	10/88 →	FWD, →|Mot. 14142839	**VKPC 85610**	
Mk III 2.0 16V TURBO	C20LET/C20XE - 1998 cc	10/88 →	FWD, |→Mot. 14142840	**VKPC 85611**	
Mk II 1.6 DIESEL	16D/16DA - 1598 cc	82 → 87		**VKPC 85406**	VKMC 05200
Mk II 1.6 DIESEL	16D/16DA - 1598 cc	87 →		**VKPC 85408**	**VKMC 05201**
Mk II 1.6 DIESEL	16D/16DA - 1598 cc	82 → 87	Auto.GBX	**VKPC 85406**	VKMC 05200
Mk II 1.6 DIESEL	16D/16DA - 1598 cc	87 →	Auto.GBX	**VKPC 85408**	**VKMC 05201**
Mk III 1.7 DIESEL	17D - 1699 cc	10/88 →	→|Mot. 14333449	**VKPC 85408**	**VKMC 05201**
Mk III 1.7 DIESEL	17D - 1699 cc	10/88 →	|→Mot. 14333450	**VKPC 85611**	
Mk III 1.7 TURBO DIESEL	17TD - 1686 cc	03/92 →		**VKPC 85404**	

CORSA

1.2	X12SZ/12NZ/C12NZ - 1196 cc	93 →		**VKPC 85206**	**VKMC 05100**
1.4	C14NZ/X14SZ/C14SE - 1398 cc	93 →		**VKPC 85206**	
1.4	X14XE/C14SEL - 1388 cc	93 →		**VKPC 85211**	
1.6	C16LZ/C16SEL/C16XE/X16XE - 1598 cc	93 →		**VKPC 85211**	
1.5 DIESEL	X15D/15D - 1488 cc	93 →	→|Mot. 877697	**VKPC 85410**	
1.5 DIESEL	X15D/15D - 1488 cc	93 →	|→Mot. 877698	**VKPC 85621**	
1.5 TURBO DIESEL	X15TD/15TD - 1488 cc	93 →	→|Mot. 877697	**VKPC 85410**	
1.5 TURBO DIESEL	X15TD/15TD - 1488 cc	93 →	|→Mot. 877698, →|Mot. 00076350	**VKPC 85621**	
1.5 TURBO DIESEL	X15TD/15TD - 1488 cc	93 →	|→Mot. 00076351	**VKPC 85622**	
1.7 DIESEL	17D/X17D - 1699 cc	93 →	→|Mot. 00877697	**VKPC 85404**	
1.7 DIESEL	17D/X17D - 1699 cc	94 →	|→Mot. 00877698	**VKPC 85620**	

www.bergab.ru Берг АБ bergab@ya.ru Тел. (495)-228-06-21, факс (495) 223-3071

www.bergab.ru Берг АБ bergab@ya.ru Тел. (495)-228-06-21, факс (495) 223-3071

VAUXHALL .../...

FRONTERA

2.0	C20NE - 1998 cc	92 → 98	→|Mot. 14608700	VKPC 85407	VKMC 05401
2.0	C20NE - 1998 cc	92 → 98	|→Mot. 14608701, →|Mot. SV720102	VKPC 85409	
2.0	X20SE - 1998 cc	92 → 98		VKPC 85409	
2.2	X22XE - 2198 cc	92 → 98		VKPC 85611	
2.4	C24NE - 2394 cc	92 → 98		VKPC 85603	
3.2	32 - 3200 cc	99 →			VKPA 85609
2.3 TURBO DIESEL	23TD - 2298 cc	92 → 98		VKPC 85603	
2.5 TURBO DIESEL	25TD - 2499 cc	96 →		VKPC 82810	

NOVA

1.0	10S - 993 cc	83 → 93	OHV	VKPC 85201	
1.2	12S/12NV/C12NZ - 1196 cc	83 → 93		VKPC 85206	
1.3	13S - 1297 cc	83 → 90		VKPC 85202	VKMC 05103
1.6	16SV - 1598 cc	05/88 → 93		VKPC 85401	VKMC 05120
1.6	C16SE/E16SE/C16NZ - 1598 cc	83 → 92	→|CH 02J22349	VKPC 85401	VKMC 05120
1.6	C16SE/E16SE/C16NZ - 1598 cc	83 → 92	|→CH 02J22350	VKPC 85206	
1.5 DIESEL / TURBO DIESEL	4EC1/T4 EC1 - 1488 cc	83 → 92	→|Mot. 19311737	VKPC 85403	
1.5 DIESEL / TURBO DIESEL	4EC1/T4 EC1 - 1488 cc	83 → 96	|→Mot. 19311738	VKPC 85404	

OMEGA

2.0	20SE/X20SE - 1998 cc	94 →		VKPC 85409	
2.0 i.e 16V	X20XEV - 1998 cc	94 →		VKPC 85611	
2.5	X25XE - 2498 cc	94 →		VKPC 85613	
3.0 24V	X30XE - 2969 cc	94 →		VKPC 85613	
2.5 TURBO DIESEL	U25TD - 2490 cc	94 →		VKPC 88826	

ROYALE

2.8	28H - 2784 cc	78 → 82		VKPC 85600	
3.0	30/30NE/C30LE - 2968 cc	78 → 82		VKPC 85600	

SINTRA

2.2	X22XE - 2198 cc	97 → 99		VKPC 85611	
3.0	X30XE - 2969 cc	97 → 99		VKPC 85613	

TIGRA

1.4	C14NZ - 1389 cc	94 →		VKPC 85211	
1.6	C16LZ - 1598 cc	94 →		VKPC 85211	

VECTRA

1.6	16LZ2 - 1598 cc	11/95 →		VKPC 85409	
1.6	X16SZR - 1598 cc	11/95 →		VKPC 85206	
1.6	X16XEL - 1598 cc	11/95 →		VKPC 85211	
1.8	X18XE - 1796 cc	11/95 →		VKPC 85611	
1.8 16V	X18XE1 - 1796 cc	11/95 →		VKPC 85624	
2.0	C20SEL/X20XEV - 1998 cc	11/95 →		VKPC 85611	
2.0	20NEJ - 1998 cc	11/95 →		VKPC 85409	
2.2	C22SEL - 2198 cc	11/95 →		VKPC 85611	
2.5	C25XE/X25XE - 2498 cc	11/95 →		VKPC 85613	
1.7 TURBO DIESEL	X17TD - 1699 cc	11/95 →		VKPC 85620	
2.0 16V DTI	X20DTL/X20DTH - 1995 cc	11/95 →		VKPC 85623	

VICEROY

2.5	25E - 2490 cc	80 → 82		VKPC 85600	

www.bergab.ru Берг АБ bergab@ya.ru Тел. (495)-228-06-21, факс (495) 223-3071

www.bergab.ru Берг АБ bergab@ya.ru Тел. (495)-228-06-21, факс (495) 223-3071

VOLKSWAGEN

BEETLE

1.6	AWH - 1598 cc	99 →	VKPC 81408	
1.8	APH/AVC - 1781 cc	99 →	VKPC 81620	
2.0	AEG - 1984 cc	01/98 → 10/98	VKPC 81620	
2.0	AEG/APK/AQY - 1984 cc	11/98 →	VKPC 81620	
1.9 TDI	ALH/AGR - 1896 cc	11/98 →	VKPC 81623	

BORA / VARIANT / 4 MOTION

1.4 16V	AHW/AKQ - 1390 cc	10/98 →	VKPC 81407	
1.4 16V	APE/AXP - 1390 cc	99 →	VKPC 81407	
1.6	AEH/AKL/APF - 1598 cc	09/98 →	VKPC 81408	
1.6 16V	ATN/AUS/AZD - 1598 cc	99 →	VKPC 81419	
1.8	AGN - 1781 cc	09/98 →	VKPC 81620	
2.0	APK/AQY/AZH - 1984 cc	09/98 →	VKPC 81620	
2.3 V5	AGZ - 2324 cc	09/98 →	VKPC 81622	
2.8	AQP/AUE - 2792 cc	99 →	VKPC 81611	
1.9 SDI	AGP/AQM - 1896 cc	11/98 →	VKPC 81623	
1.9 TDI	AGR/AHF/ALH/ASV - 1896 cc	09/98 →	VKPC 81623	
1.9 TDI	AJM/ATD/AUY - 1896 cc	11/98 →	VKPC 81626	
1.9 TDI	ARL - 1896 cc	99 →	VKPC 81626	

CORRADO

1.8 16V	KR/PG - 1781 cc	09/88 → 07/93	VKPC 81401	VKPA 81401
2.0 16V	2E/9A/ADY - 1984 cc	08/91 → 07/95	VKPC 81401	VKPA 81401
2.9 VR6	ABV - 2899 cc	08/91 → 07/95	VKPC 81611	

DERBY

0.9	HA - 895 cc	74 → 81	VKPC 81200	VKMC 01100
1.05	GL - 1043 cc	77 → 90	VKPC 81200	VKMC 01100
1.1	HB - 1093 cc	77 → 90	VKPC 81200	VKMC 01100
1.3	HH/GT/GK/HK/HW/MH - 1272 cc	77 → 90	VKPC 81200	VKMC 01100

GOLF I / GOLF II

1.0	HZ - 1043 cc	07/88 → 10/90	VKPC 81200	VKMC 01100
1.0	HZ - 1043 cc	10/90 → 10/91	VKPC 81204	
1.1	FA/FJ/GG - 1093 cc	→ 07/84	VKPC 81200	VKMC 01100
1.3	GF/GT/GS/HK/HW/MH/NU/RC/2C - 1272 cc	→ 07/89	VKPC 81200	VKMC 01100
1.3	NZ - 1272 cc	86 → 10/90	VKPC 81200	VKMC 01100
1.3	NZ - 1272 cc	10/90 → 07/92	VKPC 81204	
1.3	2G - 1272 cc	89 → 10/90	VKPC 81200	VKMC 01100
1.3	2G - 1272 cc	10/90 → 07/92	VKPC 81204	
1.5	EH/GH/JB - 1460 cc	77 → 07/80	VKPC 81400	VKPA 81400
1.5	GH/JB - 1460 cc	08/80 → 07/84	VKPC 81401	VKPA 81401
1.5	FB/FD/FH/FX - 1471 cc	02/74 → 12/75	VKPC 81400	VKPA 81400
1.6	EE/EF/EJ/EM/EN/FN/FP/FT/FV - 1588 cc	→ 07/80	VKPC 81400	VKPA 81400
1.6	EM/EN - 1588 cc	08/80 → 07/83	VKPC 81401	VKPA 81401
1.6	EZ/EZA/HM/HN/PN/RF - 1596 cc	→ 07/92	VKPC 81401	VKPA 81401
1.6 GTI	EG - 1588 cc	76 → 81	VKPC 81400	VKPA 81400
1.6 GTI	EG - 1588 cc	81 → 07/82	VKPC 81401	VKPA 81401
1.8	GU/GX/HV/PB/PF/RD/RG/RH/RP/RV - 1781 cc	→ 07/92	VKPC 81401	VKPA 81401
1.8 GTI	EN/EV/DX/JJ/HT/KR/PG/PL - 1781 cc	82 → 07/92	VKPC 81401	VKPA 81401
1.8 SYNCRO	GU/GX/PG/RH/1H/1P - 1781 cc	82 → 12/92	VKPC 81401	VKPA 81401
1.5 DIESEL	CK - 1471 cc	07/76 → 07/80	VKPC 81400	VKPA 81400
1.6 DIESEL	CR/CY - 1588 cc	08/80 → 03/82	VKPC 81400	VKPA 81400
1.6 DIESEL	CR/CY/ME/JP/1V/JK - 1588 cc	04/82 → 07/91	VKPC 81401	VKPA 81401

www.bergab.ru Берг АБ bergab@ya.ru Тел. (495)-228-06-21, факс (495) 223-3071

www.bergab.ru Берг АБ bergab@ya.ru Тел. (495)-228-06-21, факс (495) 223-3071

VOLKSWAGEN .../...

1.6 TURBO DIESEL	MF/JR/RA/SB - 1588 cc	08/83 → 91	VKPC 81401	VKPA 81401

GOLF III

1.4	ABD - 1390 cc	09/91 → 10/97	VKPC 81204	VKMC 01103
1.4	AEX/APQ - 1391 cc	05/96 → 10/97	VKPC 81210	
1.6	ABU - 1595 cc	09/92 → 10/97	VKPC 81204	VKMC 01104
1.6	AEE - 1598 cc	05/96 → 10/97	VKPC 81210	
1.6	AFT/AKS - 1598 cc	05/96 → 10/97	VKPC 81401	VKPA 81401
1.8	AAM/ABS - 1781 cc	11/91 → 10/97	VKPC 81401	VKPA 81401
1.8	ACC/ADZ - 1781 cc	07/95 → 10/97	VKPC 81401	VKPA 81401
2.0	AEP/AGG/AKR - 1984 cc	07/95 → 10/97	VKPC 81401	VKPA 81401
2.0 GTI 16V	ABF - 1984 cc	08/92 → 10/97	VKPC 81401	VKPA 81401
2.0 GTI 16V	2E - 1984 cc	11/91 → 10/97	VKPC 81401	VKPA 81401
2.8 VR6	AAA - 2792 cc	01/92 → 10/97	VKPC 81611	
1.9 DIESEL	1Y - 1896 cc	11/91 → 10/97	VKPC 81401	VKPA 81401
1.9 DIESEL	AEY - 1896 cc	07/95 → 10/97	VKPC 81401	VKPA 81401
1.9 TURBO DIESEL	AAZ/1Z/AHU/ALE - 1896 cc	11/91 → 10/97	VKPC 81401	VKPA 81401
1.9 TURBO DIESEL	AFN - 1896 cc	07/95 → 10/97	VKPC 81401	VKPA 81401

GOLF IV / VARIANT / 4 MOTION

1.4	AHW/AKQ - 1390 cc	10/97 →	VKPC 81407	
1.4	APE/AXP - 1390 cc	10/97 →	VKPC 81407	
1.6	AEH/AKL/APF - 1598 cc	09/98 →	VKPC 81408	
1.6 16V	ATN/AUS/AZD - 1598 cc	98 →	VKPC 81419	
1.8	AGN/AGU/AQA/ARZ - 1781 cc	10/97 →	VKPC 81620	
2.0	APK/AQY/AZH - 1984 cc	08/98 →	VKPC 81620	
2.3 V5	AGZ - 2324 cc	10/97 →	VKPC 81622	
2.8 V6	AQP/AUE - 2792 cc	05/99 →	VKPC 81611	
1.9 SDI	AGP/AQM - 1896 cc	10/97 →	VKPC 81623	
1.9 TDI	AGR/AHF/ALH/ANU/ASV - 1896 cc	10/97 →	VKPC 81623	
1.9 TDI	AJM/ATD/AUY - 1896 cc	05/99 →	VKPC 81626	
1.9 TDI	ARL - 1896 cc	99 →	VKPC 81626	
1.9 TDi	ALH/AGR/AHF - 1896 cc	10/97 →	VKPC 81623	

GOLF CABRIOLET

1.3	HK - 1272 cc	79 → 07/86	VKPC 81200	VKMC 01100
1.5	EH - 1460 cc	08/83 → 12/92	VKPC 81401	VKPA 81401
1.6	HN/EWA/RE - 1588 cc	08/83 → 09/93	VKPC 81401	VKPA 81401
1.6	AEK/AFT/AKS - 1598 cc	10/94 → 04/99	VKPC 81401	VKPA 81401
1.6	AFT/AKS - 1598 cc	05/99 →	VKPC 81401	VKPA 81401
1.8	EX/JH/DX/KT/2H - 1781 cc	08/83 → 09/93	VKPC 81401	VKPA 81401
1.8	AAM/ABS/ADZ - 1781 cc	09/93 → 04/99	VKPC 81401	VKPA 81401
1.8	ANN/ANP - 1781 cc	04/98 → 04/99	VKPC 81401	VKPA 81401
1.8	AAM/ADZ/ANN/ANP - 1781 cc	05/99 →	VKPC 81401	VKPA 81401
2.0	2E - 1984 cc	09/93 →	VKPC 81401	VKPA 81401
2.0	ADY/AGG/AKR - 1984 cc	10/94 → 04/99	VKPC 81401	VKPA 81401
2.0	AKR - 1984 cc	05/99 →	VKPC 81401	VKPA 81401
1.9 TDI	AFN/AHU/ALE/1Z - 1896 cc	08/95 → 04/99	VKPC 81401	VKPA 81401
1.9 TDI	AFN/AHU/ALE - 1896 cc	05/99 →	VKPC 81401	VKPA 81401

GOLF ECOMATIC

1.4	ABD - 1390 cc	94 → 96	VKPC 81210	
1.6	ABU/AEA - 1598 cc	94 → 96	VKPC 81210	
1.6	AEK - 1598 cc	94 → 96	VKPC 81401	VKPA 81401
1.8	AAM/ABS/ACC/ADZ - 1781 cc	94 → 96	VKPC 81401	VKPA 81401
2.0	ABF/ADY/AEP/2E - 1984 cc	94 → 96	VKPC 81401	VKPA 81401
2.8	AAA - 2792 cc	94 → 96	VKPC 81611	
1.9 DIESEL	1Y - 1896 cc	94 → 96	VKPC 81401	VKPA 81401

www.bergab.ru Берг АБ bergab@ya.ru Тел. (495)-228-06-21, факс (495) 223-3071

www.bergab.ru Берг АБ bergab@ya.ru Тел. (495)-228-06-21, факс (495) 223-3071

1.9 TURBO DIESEL	AAZ/1Z - 1896 cc	94 → 96	VKPC 81401	VKPA 81401

GOLF VARIANT

1.4	ABD - 1390 cc	94 → 96	VKPC 81210	
1.4	AEX/APQ - 1390 cc	05/96 → 05/98	VKPC 81210	
1.4	AHW/AKQ - 1390 cc	10/97 →	VKPC 81407	
1.6	ABU/AEA/AEE - 1598 cc	94 → 99	VKPC 81210	
1.6	AEK - 1598 cc	94 → 96	VKPC 81401	VKPA 81401
1.6	AFT/AKS - 1598 cc	05/96 → 02/99	VKPC 81401	VKPA 81401
1.6	AEH/AKL/APF - 1598 cc	09/98 →	VKPC 81408	
1.8	ABS - 1781 cc	01/93 → 09/94	VKPC 81401	VKPA 81401
1.8	ACC - 1781 cc	10/94 →	VKPC 81401	VKPA 81401
1.8	AAM/ADZ/ANN/ANP - 1781 cc	05/96 → 02/99	VKPC 81401	VKPA 81401
1.8	AGN - 1781 cc	10/97 →	VKPC 81620	
2.0	2E/ADY/AEP - 1984 cc	94 → 97	VKPC 81401	VKPA 81401
2.0	AGG/AKR - 1984 cc	07/95 → 02/99	VKPC 81401	VKPA 81401
2.3 V5	AGZ - 2324 cc	10/97 →	VKPC 81622	
2.8	AAA - 2792 cc	94 → 99	VKPC 81611	
1.9 SDI	1Y/AEY - 1896 cc	10/94 → 02/99	VKPC 81401	VKPA 81401
1.9 SDI	AGP/AQM - 1896 cc	10/97 →	VKPC 81623	
1.9 TURBO DIESEL	AAZ - 1896 cc	10/94 → 02/99	VKPC 81401	VKPA 81401
1.9 TDI	AFN/AHU/1Z/ALE - 1896 cc	10/94 → 02/99	VKPC 81401	VKPA 81401
1.9 TDI	AGR/AHF/ALH/ANU/ASV - 1896 cc	10/97 →	VKPC 81623	

GOLF SYNCRO

1.4	AEX - 1390 cc	05/96 → 98	VKPC 81210	
1.6	AFT/AKS - 1598 cc	05/96 → 99	VKPC 81401	VKPA 81401
1.6	AEE - 1598 cc	05/96 → 98	VKPC 81210	
1.8	ABS - 1781 cc	01/93 → 09/94	VKPC 81401	VKPA 81401
1.8	ADZ - 1781 cc	10/94 → 98	VKPC 81401	VKPA 81401
1.8	AAM/ADZ/ANN/ANP - 1781 cc	05/96 → 99	VKPC 81401	VKPA 81401
1.8	AGN - 1781 cc	07/98 → 99	VKPC 81620	
2.0	AGG/AKR - 1984 cc	07/95 → 99	VKPC 81401	VKPA 81401
2.8 VR6	AAA - 2792 cc	05/96 → 98	VKPC 81611	
2.9	ABV - 2899 cc	10/94 → 98	VKPC 81611	
1.9 SDI	1Y/AEY - 1896 cc	10/94 → 99	VKPC 81401	VKPA 81401
1.9 TURBO DIESEL	AAZ - 1896 cc	05/96 → 99	VKPC 81401	VKPA 81401
1.9 TDI	AEP/AFN/AHU/1Z/ALE - 1896 cc	10/94 → 99	VKPC 81401	VKPA 81401
1.9 TDI	AGR - 1896 cc	07/98 →	VKPC 81623	

JETTA

1.0	HZ - 1043 cc	87 → 89	VKPC 81200	VKMC 01100
1.1	GG - 1093 cc	79 → 83	VKPC 81200	VKMC 01100
1.3	GF/GS/GT/HK/HW/MH - 1272 cc	84 → 91	VKPC 81200	VKMC 01100
1.3	NU/NZ/RC/2C/2G - 1272 cc	84 → 91	VKPC 81200	VKMC 01100
1.5	GH/JB - 1460 cc	08/80 → 84	VKPC 81401	VKPA 81401
1.6	EJ/EM/FR - 1588cc	08/80 → 83	VKPC 81401	VKPA 81401
1.6	EZ/EZA/HM/HN/PN/RF - 1596cc	08/83 →	VKPC 81401	VKPA 81401
1.8	EN/GU/GX/GZ/HV/PB/PF - 1781 cc	08/80 → 91	VKPC 81401	VKPA 81401
1.8	RD/RG/RH/RP/RV - 1781 cc	08/80 → 91	VKPC 81401	VKPA 81401
1.8 SYNCRO	GU/GX/PG/RH/1H/1P - 1781 cc	86 → 91	VKPC 81401	VKPA 81401
1.6 DIESEL	CR/CY - 1588 cc	→ 03/82	VKPC 81400	VKPA 81400
1.6 DIESEL	CR/CY/ME/JP/1V/JK - 1588 cc	04/82 →	VKPC 81401	VKPA 81401
1.6 TURBO DIESEL	MF/JR/RA/SB - 1588 cc	08/83 → 09/91	VKPC 81401	VKPA 81401

LUPO

1.0	AER/ALD/ALL/ANV/AUC - 999 cc	10/98 →	VKPC 81215	
1.4 16V	AHW/AKQ/AUA/AUB - 1390 cc	10/98 →	VKPC 81407	
1.4 16V	AFK/ANM/APE/AQQ - 1390 cc	10/98 →	VKPC 81407	
1.6 16V	AVY - 1598 cc	10/98 →	VKPC 81419	
1.2 TDI	ANY/AYZ - 1191 cc	10/98 →	VKPC 81417	
1.4 TDI	AMF - 1422 cc	10/98 →	VKPC 81417	

www.bergab.ru Берг АБ bergab@ya.ru Тел. (495)-228-06-21, факс (495) 223-3071

www.bergab.ru Берг АБ bergab@ya.ru Тел. (495)-228-06-21, факс (495) 223-3071

VOLKSWAGEN .../...

1.7 SDI	AKU - 1716 cc	10/98 →	VKPC 81615	

PASSAT

1.3	FY/FZ - 1272 cc	78 → 83	VKPC 81200	VKMC 01100
1.3	ZA/ZF - 1297 cc	73 → 78	VKPC 81400	VKPA 81400
1.3	EP - 1297 cc / EU - 1272 cc	81 → 88	VKPC 81401	VKPA 81401
1.5	FF/FL/YJ/ZB/ZC - 1471 cc	73 → 77	VKPC 81400	VKPA 81400
1.6	FS/WZ/YG/YH/YK/YS/YT/YU - 1588 cc	75 → 80	VKPC 81400	VKPA 81400
1.6	WP/WV/WY/YN/YP/YY - 1588 cc	→ 03/81	VKPC 81400	VKPA 81400
1.6	WP/WV/WY/YN/YP/YY - 1588 cc	03/81 → 88	VKPC 81401	VKPA 81401
1.6	DT/DTA/JU/RL - 1595 cc	82 → 88	VKPC 81401	VKPA 81401
1.6	1F/ABN/EZ/RF - 1595 cc	88 → 95	VKPC 81401	VKPA 81401
1.6	AEK/AFT - 1598 cc	10/94 → 12/96	VKPC 81401	VKPA 81401
1.6	ADP - 1598 cc	10/96 → 00	VKPC 81402	VKPA 81402
1.6	AEH - 1598 cc	10/96 →	VKPC 81408	
1.6	AHL/ANA/APV/ARM - 1598 cc	10/96 → 05/99	VKPC 81408	
1.6	ALZ - 1598 cc	01 →	VKPC 81408	
1.8	DS/JN/JV/PP/RM - 1781 cc	82 →	VKPC 81401	VKPA 81401
1.8	PB/PF/RP - 1781 cc	88 → 93	VKPC 81401	VKPA 81401
1.8	AAM/ABS/ADZ - 1781 cc	10/93 → 12/96	VKPC 81401	VKPA 81401
1.8	ADR - 1781 cc	12/96 → 12/98	VKPC 81402	VKPA 81402
1.8	AFY - 1781 cc	01/97 →	VKPC 81402	VKPA 81402
1.8	ANB/APT/ARG - 1781 cc	01/99 →	VKPC 81402	VKPA 81402
1.8	AWT - 1781 cc	01 →	VKPC 81620	
1.8 16V	KR - 1781 cc	88 → 96	VKPC 81401	VKPA 81401
1.8 20V TURBO	AEB/APU - 1781 cc	10/96 →	VKPC 81402	VKPA 81402
1.9	WN - 1921 cc	80 → 08/83	VKPC 81605	VKMC 01030
2.0	9A - 1984 cc	89 → 96	VKPC 81401	VKPA 81401
2.0	2E - 1984 cc	10/93 → 96	VKPC 81401	VKPA 81401
2.0	HP/JS - 1994 cc	84 → 88	VKPC 81605	VKMC 01031
2.0	ABF/AEP/AGG - 1984 cc	01/94 → 12/96	VKPC 81401	VKPA 81401
2.0	ACX/ADY - 1984 cc	03/94 → 07/95	VKPC 81401	VKPA 81401
2.0	AZM - 1984 cc	01 →	VKPC 81620	
2.1	WE - 2144 cc	07/80 → 07/81	VKPC 81605	VKMC 01030
2.2	HY/KV/KX - 2226 cc	85 → 88	VKPC 81605	VKMC 01031
2.3 V5	AGZ - 2324 cc	09/97 → 00	VKPC 81622	
2.3 V5	AZX - 2324 cc	01 →	VKPC 81622	
2.8	AAA - 2792 cc	10/93 → 12/96	VKPC 81611	
2.8	ACK/AGE/APR - 2792 cc	97 → 00	VKPC 81802	
2.8	AQD/ATQ/ATX - 2792 cc	97 → 00	VKPC 81802	
2.8	AMX/BBG - 2792 cc	01 →	VKPC 81802	
1.5 DIESEL	CK - 1471 cc	76 → 80	VKPC 81400	VKPA 81400
1.6 DIESEL	CR/JR - 1588 cc	81 → 88	VKPC 81401	VKPA 81401
1.6 DIESEL	SB - 1588 cc	→ 96	VKPC 81401	VKPA 81401
1.6 TURBO DIESEL	CY - 1588 cc	82 → 88	VKPC 81401	VKPA 81401
1.6 TURBO DIESEL	RA/SB - 1588 cc	89 →	VKPC 81401	VKPA 81401
1.9 DIESEL	1Y - 1896 cc	90 → 95	VKPC 81401	VKPA 81401
1.9 DIESEL	AHH - 1896 cc	05/97 →	VKPC 81615	
1.9 TURBO DIESEL	AAZ/1Z - 1896 cc	92 → 12/96	VKPC 81401	VKPA 81401
1.9 TURBO DIESEL	AFN/AHU - 1896 cc	10/93 → 09/96	VKPC 81401	VKPA 81401
1.9 TURBO DIESEL	AFN/AHU - 1896 cc	10/96 →	VKPC 81615	
1.9 TDI	AVG - 1896 cc	05/97 →	VKPC 81615	
1.9 TDI	AJM/ATJ - 1896 cc	97 → 00	VKPC 81626	
1.9 TDI	AVB/AVF/AWX - 1896 cc	01 →	VKPC 81626	
2.5 TDI	AFB/AKN - 2496 cc	97 → 00	VKPC 81625	
2.5 TDI	AKN - 2496 cc	01 →	VKPC 81625	

PASSAT SYNCRO / 4 MOTION

1.6	ALZ - 1598 cc	01 →	VKPC 81408	
1.8	DS/JN - 1781 cc	85 → 92	VKPC 81401	VKPA 81401
1.8	PG - 1781 cc	09/89 → 12/93	VKPC 81401	VKPA 81401
1.8	ADR/APT/ARG - 1781 cc	06/97 → 04/99	VKPC 81402	VKPA 81402
1.8	AWT - 1781 cc	01 →	VKPC 81620	

www.bergab.ru Берг АБ bergab@ya.ru Тел. (495)-228-06-21, факс (495) 223-3071

www.bergab.ru Берг АБ bergab@ya.ru Тел. (495)-228-06-21, факс (495) 223-3071

2.0	HP/JS - 1994 cc	85 → 90	VKPC 81605	VKMC 01031
2.0	2E - 1984 cc	10/90 → 97	VKPC 81401	VKPA 81401
2.0	ADY/AGG - 1984 cc	94 → 97	VKPC 81401	VKPA 81401
2.0	AZM - 1984 cc	01 →	VKPC 81620	
2.2	HY/JT - 2226 cc	85 → 92	VKPC 81605	VKMC 01031
2.3 V5	AGZ - 2324 cc	09/97 → 00	VKPC 81622	
2.3 V5	AZX - 2324 cc	01 →	VKPC 81622	
2.8	ACK/ALG/APR - 2792 cc	97 → 00	VKPC 81802	
2.8	AQD/ATQ/ATX - 2792 cc	97 → 00	VKPC 81802	
2.8	AMX/BBG - 2792 cc	01 →	VKPC 81802	
2.9	ABV - 2899 cc	94 → 97	VKPC 81611	
1.9 TURBO DIESEL	AFN/AVG - 1896 cc	06/97 →	VKPC 81615	
1.9 TDI	ATJ - 1896 cc	97 → 00	VKPC 81626	
1.9 TDI	AVB/AVF/AWX - 1896 cc	01 →	VKPC 81626	
2.5 TDI	AFB/AKN - 2496 cc	97 → 00	VKPC 81625	
2.5 TDI	AKN - 2496 cc	01 →	VKPC 81625	

POLO

0.8	HE - 772 cc	74 → 81	VKPC 81200	VKMC 01100
0.9	HA - 895 cc	74 → 81	VKPC 81200	VKMC 01100
1.0	AER/ALL - 999 cc	07/96 →	VKPC 81215	
1.0	ALD/ANV/ANW - 999 cc	10/99 →	VKPC 81215	
1.05	AAK/AAU/GL/HZ - 1043 cc	82 → 10/90	VKPC 81200	VKMC 01100
1.05	AAU/ACM/HZ - 1043 cc	10/90 → 94	VKPC 81204	
1.05	AEV - 1043 cc	10/94 → 06/96	VKPC 81210	
1.1	HB - 1093 cc	74 → 10/90	VKPC 81200	VKMC 01100
1.3	GK/GT/HH/HJ/HK/HW/MH/MM/NU - 1272 cc	74 → 10/90	VKPC 81200	VKMC 01100
1.3	NZ - 1272 cc	74 → 10/90	VKPC 81200	VKMC 01100
1.3	NZ - 1272 cc	10/90 → 94	VKPC 81204	
1.3	2G/3F/PY - 1272 cc	87 → 10/90	VKPC 81200	VKMC 01100
1.3	2G/3F/PY - 1272 cc	10/90 → 94	VKPC 81204	
1.3	AAV - 1272 cc	01/91 → 94	VKPC 81204	
1.3	ADX - 1298 cc	10/94 → 04/97	VKPC 81210	
1.4	AEX - 1391 cc	07/95 → 12/97	VKPC 81210	
1.4	AEX/AKV/ANX/APQ - 1391 cc	05/97 →	VKPC 81210	
1.4	AKK/AKP/ANW/AUC/AUD - 1391 cc	10/99 →	VKPC 81215	
1.4	AFK/AHW/AKQ/ANM/APE/AUA/AUB - 1391 cc	10/99 →	VKPC 81407	
1.4 16V	AFH - 1391 cc	04/96 →	VKPC 81411	
1.6	AEA - 1598 cc	10/94 → 07/95	VKPC 81210	
1.6	AEE - 1598 cc	07/95 →	VKPC 81210	
1.6	AHS - 1598 cc	03/96 →	VKPC 81210	
1.6 16V	AJV - 1598 cc	08/98 →	VKPC 81419	
1.6 16V	ARC/AVY - 1598 cc	10/99 →	VKPC 81419	
1.3 DIESEL	MN - 1272 cc	74 → 90	VKPC 81206	VKMC 01101
1.4 DIESEL	1W - 1398 cc	10/90 → 94	VKPC 81206	VKMC 01101
1.4 TDI	AMF - 1422 cc	10/99 →	VKPC 81417	
1.7 SDI	AHG/AKU - 1716 cc	04/97 →	VKPC 81615	
1.9 DIESEL	AEF - 1896 cc	10/94 → 04/98	VKPC 81615	
1.9 SDI	AGD - 1896 cc	07/96 →	VKPC 81615	
1.9 SDI	ASX - 1896 cc	00 →	VKPC 81615	
1.9 SDI	ASY - 1896 cc	01/02 →	VKPC 81416	

POLO CLASSIC / VARIANT

1.4	AEX - 1391 cc	05/96 → 12/97	VKPC 81210	
1.4	AKV/ANX/APQ - 1391 cc	12/97 →	VKPC 81210	
1.4	AKK/ANW/AUD - 1391 cc	10/99 →	VKPC 81215	
1.4	APE/AUA - 1391 cc	10/99 →	VKPC 81407	
1.6	AFT/1F - 1598 cc	05/96 → 05/98	VKPC 81401	VKPA 81401
1.6	AEE - 1598 cc	09/97 → 12/98	VKPC 81210	
1.6	ALM - 1598 cc	07/98 →	VKPC 81210	
1.6	AEH/AKL/APF/AUR - 1598 cc	10/99 →	VKPC 81408	
1.8	ADD/ADZ - 1781 cc	05/96 →	VKPC 81401	VKPA 81401
2.0	ADC - 1994 cc	03/99 →	VKPC 81401	VKPA 81401
1.7 SDI	AKW - 1716 cc	11/97 →	VKPC 81401	VKPA 81401

www.bergab.ru Берг АБ bergab@ya.ru Тел. (495)-228-06-21, факс (495) 223-3071

www.bergab.ru Берг АБ bergab@ya.ru Тел. (495)-228-06-21, факс (495) 223-3071

VOLKSWAGEN .../...

1.9 DIESEL	1Y - 1896 cc	05/96 → 99	VKPC 81401	VKPA 81401
1.9 SDI	AEY - 1896 cc	05/96 → 99	VKPC 81401	VKPA 81401
1.9 SDI	AGP/AQM - 1896 cc	10/99 →	VKPC 81623	
1.9 TDI	AFN/AHU/ALE/1Z - 1896 cc	01/97 → 99	VKPC 81401	VKPA 81401
1.9 TDI	AGR/ALH/ASV - 1896 cc	10/99 →	VKPC 81623	

SANTANA

1.3	FY/FZ - 1272 cc	→ 84	VKPC 81200	VKMC 01100
1.3	EU - 1272 cc	→ 87	VKPC 81401	VKPA 81401
1.3	EP - 1297 cc	→ 87	VKPC 81401	VKPA 81401
1.6	WP/WV/WY/YP - 1588 cc	04/81 →	VKPC 81401	VKPA 81401
1.6	DT/JU - 1595 cc	04/81 →	VKPC 81401	VKPA 81401
1.8	DS/DZ/JN/JV - 1781 cc	→ 85	VKPC 81401	VKPA 81401
1.9	WN - 1921 cc	→ 83	VKPC 81605	VKMC 01030
2.0	HP/JS - 1994 cc	→ 87	VKPC 81605	VKMC 01031
2.1	WE - 2144 cc	→ 79	VKPC 81605	VKMC 01030
1.6 DIESEL	JK - 1588 cc	08/82 →	VKPC 81401	VKPA 81401
1.6 TURBO DIESEL	CY - 1588 cc	08/81 →	VKPC 81401	VKPA 81401

SCIROCCO

1.1	FA/FJ - 1093 cc	74 → 07/79	VKPC 81200	VKMC 01100
1.3	GF/GT/HK - 1272 cc	08/79 → 07/84	VKPC 81200	VKMC 01100
1.5	EH/FB/FD/GH/JB - 1460 cc	74 → 81	VKPC 81400	VKPA 81400
1.5	EH/JB - 1460 cc	82 → 84	VKPC 81401	VKPA 81401
1.5	FH/FK - 1471 cc	02/74 → 75	VKPC 81400	VKPA 81400
1.6	EG/FR - 1588 cc	08/79 → 07/81	VKPC 81400	VKPA 81400
1.6	EG/EW/EWA/FR/HN/RE - 1588 cc	08/81 → 89	VKPC 81401	VKPA 81401
1.8	DX/EN/EX/JH/KR/KT/PL - 1781 cc	08/80 → 89	VKPC 81401	VKPA 81401

SHARAN / SHARAN SYNCRO / 4 MOTION

1.8 20V	AJH - 1781 cc	11/97 →	VKPC 81620	
1.8 20V	AWC - 1781 cc	01 →	VKPC 81620	
2.0	ABF/ADY - 1984 cc	09/95 → 00	VKPC 81401	VKPA 81401
2.0	ATM - 1984 cc	01 →	VKPC 81620	
2.8 VR6	AAA/AMY - 2792 cc	09/95 → 00	VKPC 81611	
2.8 VR6	AYL - 2792 cc	01 →	VKPC 81611	
1.9 TDI	1Z - 1896 cc	09/95 → 00	VKPC 81401	VKPA 81401
1.9 TDI	AFN/AHU/AVG - 1896 cc	07/96 → 00	VKPC 81401	VKPA 81401
1.9 TDI	ANU/AUY - 1896 cc	03/99 →	VKPC 81626	

VENTO

1.4	ABD - 1390 cc	09/91 → 95	VKPC 81204	VKMC 01103
1.4	AEX/APQ - 1391 cc	07/95 → 98	VKPC 81210	
1.6	ABU - 1598 cc	09/92 → 95	VKPC 81204	VKMC 01104
1.6	AEA - 1598 cc	10/94 → 98	VKPC 81210	
1.6	AEK - 1598 cc	10/94 → 96	VKPC 81401	VKPA 81401
1.6	AEE - 1598 cc	07/95 → 98	VKPC 81210	
1.6	AFT - 1598 cc	12/95 → 97	VKPC 81401	VKPA 81401
1.6	AKS - 1598 cc	04/97 → 98	VKPC 81401	VKPA 81401
1.8	AAM/ABS - 1781 cc	11/91 → 98	VKPC 81401	VKPA 81401
1.8	ACC/ADZ - 1781 cc	10/94 → 98	VKPC 81401	VKPA 81401
1.8	ANN/ANP - 1781 cc	97 → 98	VKPC 81401	VKPA 81401
2.0	ABF - 1984 cc	08/92 → 98	VKPC 81401	VKPA 81401
2.0	2E - 1984 cc	11/91 → 97	VKPC 81401	VKPA 81401
2.0	ADY/AEP/AGG - 1984 cc	10/94 → 98	VKPC 81401	VKPA 81401
2.0	AKR - 1984 cc	04/97 → 98	VKPC 81401	VKPA 81401
2.8 VR6	AAA - 2792 cc	01/92 → 98	VKPC 81611	
1.9 DIESEL	AEY/1Y - 1896 cc	11/91 → 98	VKPC 81401	VKPA 81401
1.9 TURBO DIESEL	AAZ/1Z - 1896 cc	11/91 → 98	VKPC 81401	VKPA 81401
1.9 TURBO DIESEL	AFN/AHU/ALE - 1896 cc	02/96 → 98	VKPC 81401	VKPA 81401

www.bergab.ru Берг АБ bergab@ya.ru Тел. (495)-228-06-21, факс (495) 223-3071

www.bergab.ru Берг АБ bergab@ya.ru Тел. (495)-228-06-21, факс (495) 223-3071

VOLKSWAGEN COMMERCIAL

CADDY

1.4	AEX - 1390 cc	11/95 →	**VKPC 81210**	
1.5	JB - 1457 cc	82 →	**VKPC 81401**	**VKPA 81401**
1.6	EW/HN/EM - 1595 cc	82 →	**VKPC 81401**	**VKPA 81401**
1.6	1F - 1596 cc	11/95 →	**VKPC 81401**	**VKPA 81401**
1.6 PICKUP	AEE - 1595 cc	06/96 →	**VKPC 81210**	
1.8	JH - 1781 cc	82 →	**VKPC 81401**	**VKPA 81401**
1.6 DIESEL	JK/ME - 1588 cc	82 →	**VKPC 81401**	**VKPA 81401**
1.7 SDI	AHB - 1716 cc	07/96 →	**VKPC 81401**	**VKPA 81401**
1.9 DIESEL	AEY/1Y - 1896 cc	11/95 →	**VKPC 81401**	**VKPA 81401**
1.9 DIESEL PICKUP	AEF - 1896 cc	06/96 →	**VKPC 81615**	
1.9 TURBO DIESEL	AHU - 1896 cc	12/96 →	**VKPC 81401**	**VKPA 81401**

CADDY KOMBI / KASTENWAGEN

1.4	AEX - 1390 cc	11/95 → 12/97	**VKPC 81210**	
1.4	AKV/APQ - 1390 cc	11/97 →	**VKPC 81210**	
1.6	1F - 1596 cc	11/95 → 05/97	**VKPC 81401**	**VKPA 81401**
1.6	AEE - 1596 cc	06/96 →	**VKPC 81210**	
1.7 SDI	AHB - 1716 cc	10/96 →	**VKPC 81401**	**VKPA 81401**
1.9 DIESEL	AEF - 1896 cc	06/96 →	**VKPC 81615**	
1.9 SDI	AEY/1Y - 1896 cc	11/95 →	**VKPC 81401**	**VKPA 81401**
1.9 TDI	AHU/ALE - 1896 cc	10/96 →	**VKPC 81401**	**VKPA 81401**

LT / LT 4x4

2.0	CH/CL - 1994 cc	76 → 83	**VKPC 81601**	
2.3	AGL - 2296 cc	05/96 →	**VKPC 81624**	
2.4	1E/DL/HS - 2370 cc	83 → 84	VKPC 81610	VKMC 01033
2.4	1E/DL/HS - 2370 cc	85 → 96	VKPC 81610	**VKMC 01035**
2.4 DIESEL	CP - 2370 cc	79 →	**VKPC 81602**	
2.4 DIESEL	1S/DW - 2383 cc	08/89 → 96	**VKPC 81602**	**VKMC 01040**
2.4 DIESEL	ACL/ACT - 2383 cc	90 → 97	**VKPC 86619**	
2.4 TURBO DIESEL	1G/DV - 2383 cc	83 → 96	**VKPC 81602**	**VKMC 01040**
2.5 SDI	AGX - 2461 cc	05/96 →	**VKPC 86619**	
2.5 TDI	AHD/APA/ANJ/BBE/BBF - 2461 cc	97 →	**VKPC 86619**	
2.7 DIESEL	CG - 2700 cc	76 → 83	**VKPC 81601**	

TARO

1.8	2Y - 1812 cc	02/89 → 09/94	**VKPC 91428**	
2.2	4Y - 2237 cc	06/89 → 07/94	**VKPC 91428**	
2.4	22R - 2366 cc	06/89 → 03/97	VKPC 91617	
2.4 DIESEL	2L - 2446 cc	02/89 → 03/97	**VKPC 91607**	

TRANSPORTER TYP 2

1.9	DF/DH/EY/GW/SP - 1916 cc	83 → 92	**VKPC 81608**	
1.9	DG/SP - 1916 cc	80 → 85	**VKPC 81607**	
1.9	DG/SP - 1916 cc	85 → 92	**VKPC 81609**	
2.1	DJ/MV/SR/SS - 2100 cc	08/85 → 92	**VKPC 81609**	
1.6 DIESEL	CS - 1588 cc	12/83 → 07/85	**VKPC 81400**	**VKPA 81400**
1.6 DIESEL	CS - 1588 cc	08/85 → 06/87	**VKPC 81401**	**VKPA 81401**
1.6 TURBO DIESEL	JX - 1588 cc	84 → 02/86	**VKPC 81400**	**VKPA 81400**
1.6 TURBO DIESEL	JX - 1588 cc	03/86 → 92	**VKPC 81401**	**VKPA 81401**
1.7 DIESEL	KY - 1716 cc	10/86 → 92	**VKPC 81401**	**VKPA 81401**

TRANSPORTER TYP 4

1.8	PD - 1781 cc	12/90 → 94	**VKPC 81401**	**VKPA 81401**
2.0	AAC - 1984 cc	09/90 →	**VKPC 81401**	**VKPA 81401**

www.bergab.ru Берг АБ bergab@ya.ru Тел. (495)-228-06-21, факс (495) 223-3071

www.bergab.ru Берг АБ bergab@ya.ru Тел. (495)-228-06-21, факс (495) 223-3071

VOLKSWAGEN COMMERCIAL .../...

2.5	AAF/ACU - 2461 cc	09/90 → 06/94		VKPC 81803	
2.5	AAF/ACU/AEN - 2461 cc	07/94 → 10/96		VKPC 86619	
2.5	AET/AEU - 2461 cc	05/96 →		VKPC 86619	
2.5	AJT/APL/AVT - 2461 cc	05/98 →		VKPC 86619	
2.8 VR6	AES - 2792 cc	05/96 →		VKPC 81611	
2.8 V6	AMV - 2792 cc	99 →	→|CH 70-2-097 000	VKPC 81611	
1.9 DIESEL	1X - 1896 cc	09/90 →		VKPC 81401	VKPA 81401
1.9 TURBO DIESEL	ABL - 1896 cc	91 →		VKPC 81401	VKPA 81401
2.4 DIESEL	AAB - 2371 cc	09/90 → 95	→|Mot. AAB 320 127	VKPC 81803	
2.4 DIESEL	AAB/AJA - 2371 cc	07/94 →	|→Mot. ABB 320 128	VKPC 86619	
2.5 TDI	ACV - 2461 cc	08/95 →		VKPC 86619	
2.5 TDI	AXG/AHY/AYC/AYY/AUF - 2461 cc	99 →		VKPC 86619	

TRANSPORTER SYNCRO

1.9	DG/SP - 1916 cc	80 → 85		VKPC 81607	
1.9	DG/SP - 1916 cc	85 → 92		VKPC 81609	
2.1	DJ/MV/SR/SS - 2100 cc	08/85 → 92		VKPC 81609	
2.5	AAF - 2461 cc	11/92 → 95		VKPC 86619	
2.5	ACU - 2461 cc	93 → 95		VKPC 86619	
2.5	AET/APL/AVT - 2461 cc	97 →		VKPC 86619	
2.4 DIESEL	AAB - 2371 cc	11/92 → 95	→|Mot. AAB 320 127	VKPC 81803	
2.4 DIESEL	AAB - 2371 cc	93 →	|→CH AAB 320 128	VKPC 86619	
2.5 TDI	ACV - 2461 cc	08/95 →		VKPC 86619	
2.5 TDI	AXL - 2461 cc	97 →		VKPC 86619	

4 CYLINDER INDUSTRIAL ENGINE

1.8	ADF - 1781 cc	04/94 →		VKPC 81401	VKPA 81401
1.6 DIESEL	ADK - 1588 cc	04/94 →		VKPC 81401	VKPA 81401
1.9 DIESEL	ADG - 1896 cc	04/94 →		VKPC 81401	VKPA 81401
1.9 TURBO DIESEL	ADE - 1896 cc	04/94 →		VKPC 81401	VKPA 81401
1.9 TDI	AFD - 1896 cc	04/94 →		VKPC 81401	VKPA 81401

VOLVO

DAF 55

1.1	B110 - 1108 cc	→ 72		VKPC 86203	

DAF 66

VAN 400 DIESEL		87 →		VKPC 87606	

66

1.1	B110 - 1108 cc	75 → 80		VKPC 86403	
1.3	B130 - 1289 cc	75 → 80		VKPC 86403	

110/120/130

1.8	B18 - 1780 cc	61 → 70		VKPC 86607	
2.0	B20 - 1986 cc	61 → 70		VKPC 86607	

140 SERIES

1.7	B18 - 1721 cc	→ 75		VKPC 86607	
2.0	B20 - 1986 cc	→ 74		VKPC 86607	

240 SERIES

1.8	B17 - 1784 cc	→ 81		VKPC 86610	

www.bergab.ru Берг АБ bergab@ya.ru Тел. (495)-228-06-21, факс (495) 223-3071

www.bergab.ru Берг АБ bergab@ya.ru Тел. (495)-228-06-21, факс (495) 223-3071

2.0	B19 - 1986 cc	→ 85		**VKPC 86610**
2.0	B200 - 1986 cc	86 → 93		**VKPC 86609**
2.1 TURBO	B21 - 2127 cc	→ 84		**VKPC 86610**
2.3	B23 - 2316 cc	→ 85		**VKPC 86610**
2.3	B23 - 2316 cc	86 → 93		**VKPC 86609**
2.0 DIESEL	D20 - 1986 cc	78 → 85		**VKPC 81602**
2.4 DIESEL	D24 - 2383 cc	79 → 90		**VKPC 81602**
340 SERIES				
1.4	B14 - 1397 cc	76 → 91	→|Mot. 609999	**VKPC 86403**
1.4	B14 - 1397 cc	76 → 91	|→Mot. 610000	**VKPC 86402**
1.7	B172 - 1721 cc	85 → 91		**VKPC 86413**
1.6 DIESEL	D16 - 1596 cc	83 → 91		**VKPC 86413**
360 SERIES				
1.7	B172 - 1721 cc	85 → 89		**VKPC 86413**
2.0	B19 - 1986 cc	81 → 84	→|Mot. 810500	**VKPC 86610**
2.0	B19 - 1986 cc	81 → 84	|→Mot. 810501	VKPC 86612
2.0	B200 - 1986 cc	85 → 89		**VKPC 86614**
440 SERIES				
1.6 (KX173)	B16F - 1596 cc	88 →		**VKPC 86413**
1.7	B18U - 1721 cc	88 →		**VKPC 86413**
1.7 TURBO (KX193)	B18FT - 1721 cc	88 →		**VKPC 86413**
1.8	B18U - 1794 cc	88 →		**VKPC 86413**
2.0 (KX313/KX315)	B20F - 1998 cc	88 →		**VKPC 86413**
1.9 TURBO DIESEL	D19T - 1896 cc	10/88 →		**VKPC 86413**
460 SERIES				
1.6 (LX173)	B16F - 1596 cc	88 →		**VKPC 86413**
1.7	B18EP/B18KP/B18U - 1721 cc	88 →		**VKPC 86413**
1.7 TURBO (LX193)	B18FT - 1721 cc	88 →		**VKPC 86413**
2.0 (LX313/LX315)	B20F - 1998 cc	88 →		**VKPC 86413**
1.9 TURBO DIESEL	D19T - 1896 cc	10/88 →		**VKPC 86413**
480 SERIES				
1.7	B18EP/FP - 1721 cc	86 →		**VKPC 86413**
1.7 TURBO	B18FT - 1721 cc	88 →		**VKPC 86413**
2.0	B20F - 1998 cc	93 →		**VKPC 86413**
740 SERIES				
2.0	B19 - 1986 cc	83 → 08/85		**VKPC 86610**
2.0	B200/B204 - 1986 cc	09/85 → 96		**VKPC 86609**
2.3	B23 - 2316 cc	83 → 08/85		**VKPC 86610**
2.3	B23 - 2316 cc	09/85 → 96		**VKPC 86609**
2.4 DIESEL / TURBO DIESEL	D24/D24T/D24Tic - 2383 cc	83 → 91		**VKPC 81602**
760 SERIES				
2.0 TURBO	B200/B204 - 1986 cc	09/85 → 91		**VKPC 86609**
2.3 TURBO	B23 - 2316 cc	84 → 08/85		**VKPC 86610**
2.3 TURBO	B23 - 2316 cc	09/85 → 90		**VKPC 86609**
2.4 DIESEL/TURBO DIESEL	D24/D24T/D24Tic - 2383 cc	83 → 91		**VKPC 81602**
780 SERIES				
2.0 TURBO	B200 - 1990 cc	85 → 90		**VKPC 86609**

www.bergab.ru Берг АБ bergab@ya.ru Тел. (495)-228-06-21, факс (495) 223-3071

VOLVO .../...

2.4 TURBO DIESEL INTERCOOLER	D24 - 2389 cc	85 → 90	VKPC 81602	

850 SERIES

2.0	B5202/B5204 - 1984 cc	91 →	VKPC 86618	
2.3	B5234 - 2319 cc	91 →	VKPC 86618	
2.5	B5252/B5254 - 2435 cc	91 →	VKPC 86618	
2.5 TURBO DIESEL	D5252T - 2461 cc	96 →	VKPC 86619	

940 SERIES

2.0	B200 - 1986 cc	07/90 →	VKPC 86609	
2.0 TURBO 16V	B204FT - 1986 cc	07/94 →	VKPC 86609	
2.3	B230 - 2316 cc	07/90 →	VKPC 86609	
2.5	B6254S - 2473 cc	07/94 →	VKPC 86618	
3.0	B6304FS/B6304GS - 2973 cc	07/94 →	VKPC 86618	
2.4 DIESEL / TURBO DIESEL	D24/D24T - 2383 cc	07/90 → 06/92	VKPC 81602	
2.4 DIESEL / TURBO DIESEL	D24/D24T/D24Tic - 2383 cc	07/92 →	VKPC 86619	

960 SERIES

2.0	B200 - 1986 cc	07/90 →	VKPC 86609	
2.0 TURBO 16V	B204FT - 1986 cc	07/94 →	VKPC 86618	
2.3	B230 - 2316 cc	07/90 →	VKPC 86609	
2.5	B6254S - 2473 cc	07/94 →	VKPC 86618	
3.0	B6304FS/B6304GS - 2973 cc	07/94 →	VKPC 86618	
2.4 DIESEL / TURBO DIESEL	D24/D24T - 2383 cc	07/90 → 06/92	VKPC 81602	
2.4 DIESEL / TURBO DIESEL	D24/D24T/D24Tic - 2383 cc	07/92 →	VKPC 86619	

S40 & V40

1.6 16V	B4164S - 1587 cc	11/95 →	VKPC 86618	
1.8 16V	B4184S - 1731 cc	11/95 →	VKPC 86618	
1.9 16V	B4194T - 1855 cc	11/96 →	VKPC 86618	
2.0 16V	B4204S/T - 1948 cc	11/96 →	VKPC 86618	
1.9 TURBO DIESEL	B4192T - 1870 cc	11/95 →	VKPC 86413	

S70 & V70 & C70

2.0	B5202S - 1984 cc	11/96 →	VKPC 86618	
2.0 TURBO	B5204T2/T3/T4 - 1984 cc	11/96 →	VKPC 86618	
2.3	B5234S/T - 2318 cc	11/96 →	VKPC 86618	
2.4	B5252S / B5254S/T - 2435 cc	11/96 →	VKPC 86618	
2.5 TURBO DIESEL	D5252T - 2461 cc	11/96 →	VKPC 86619	

S80

2.0 TURBO	B5204T3/4 - 1984 cc	10/98 →	VKPC 86618	
2.5 TURBO DIESEL	D5252T - 2461 cc	10/98 →	VKPC 86619	

S90 & V90

3.0 24V	B6304S/GS - 2922 cc	11/96 →	VKPC 86618	

ZASTAVA / YUGO

101/301/511/513

1.1	128A - 1116 cc	78 → 90	VKPC 82206	VKPA 82206

www.bergab.ru Берг АБ bergab@ya.ru Тел. (495)-228-06-21, факс (495) 223-3071

1.3	128B - 1298 cc	78 → 90	**VKPC 82206**	VKPA 82206
KORAL				
45 0.9	100GL - 903 cc	81 →		**VKPA 82202**
55 1.1	128A - 1116 cc	81 →	**VKPC 82206**	VKPA 82206
65 1.3	128B - 1298 cc	89 →	**VKPC 82206**	VKPA 82206

www.bergab.ru Берг АБ bergab@ya.ru Тел. (495)-228-06-21, факс (495) 223-3071

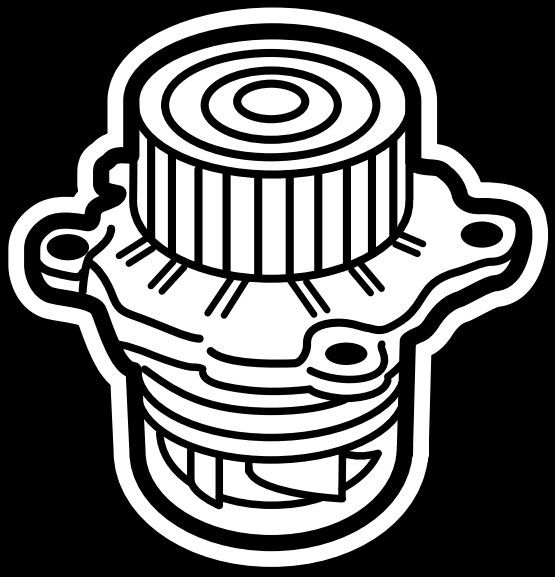

VKPA 81400

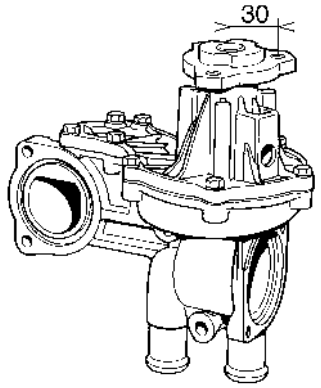

VKPA 81401

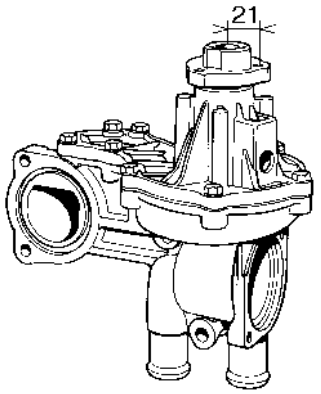

VKPA 81402

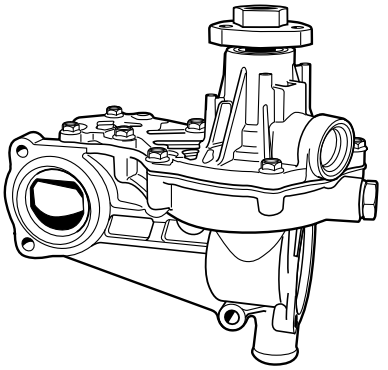

VKPA 82202

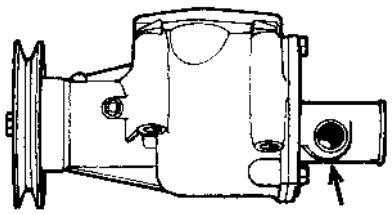

VKPA 82206

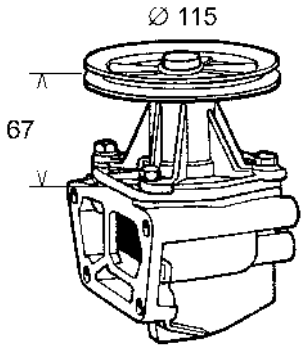

VKPA 82210

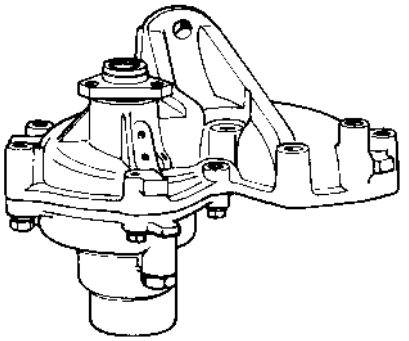

VKPA 82218

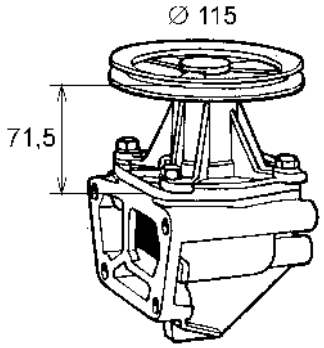

VKPA 82220

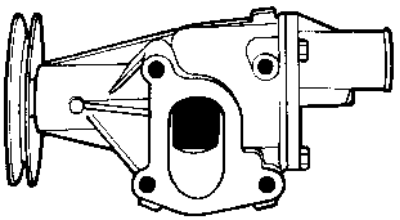

VKPA 82222

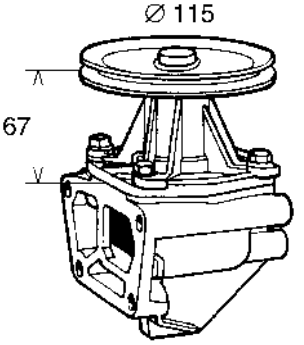

VKPA 82224

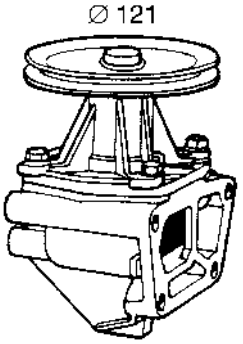

VKPA 82230

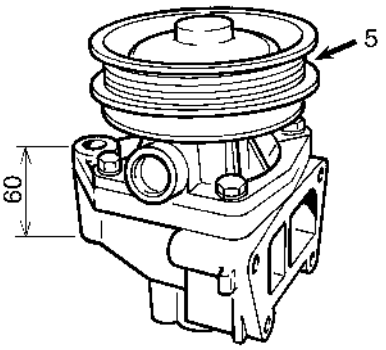

VKPA 82240

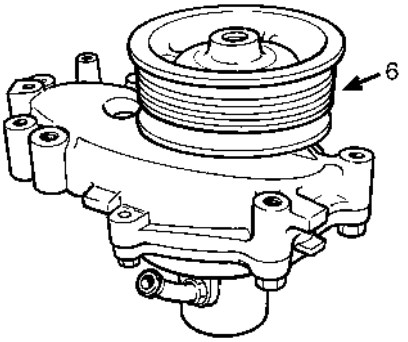

www.bergab.ru Берг АБ bergab@ya.ru Тел. (495)-228-06-21, факс (495) 223-3071

www.bergab.ru Берг АБ bergab@ya.ru Тел. (495)-228-06-21, факс (495) 223-3071

VKPA 82246

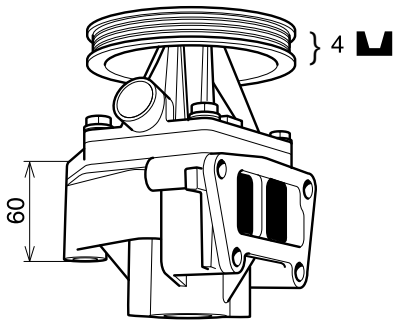

VKPA 82248

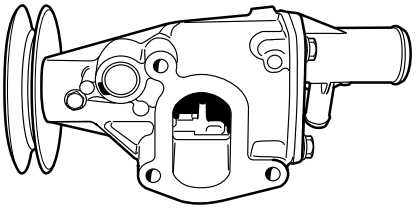

VKPA 82410

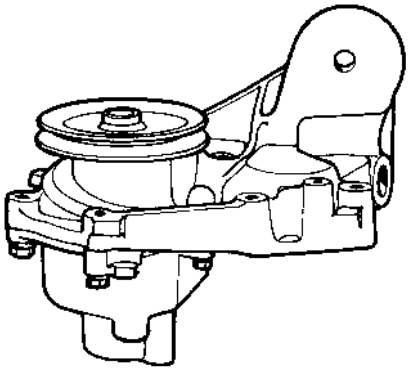

VKPA 82413

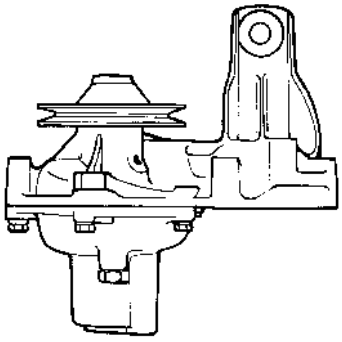

VKPA 82426

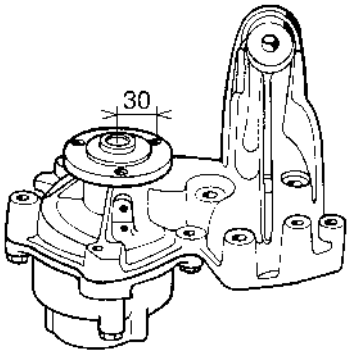

VKPA 82428

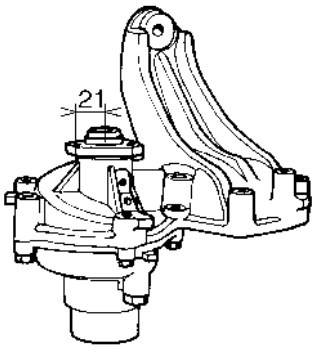

VKPA 82429

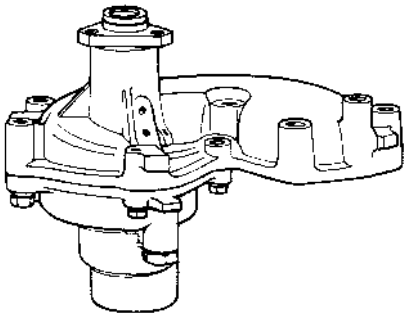

VKPA 82431

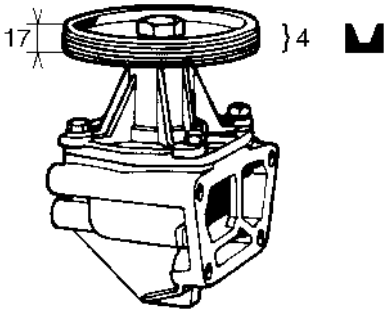

VKPA 82434

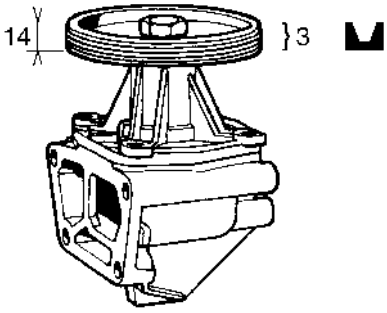

VKPA 82435

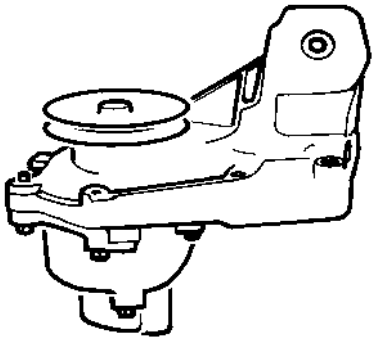

VKPA 82440

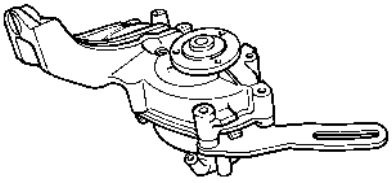

VKPA 82441

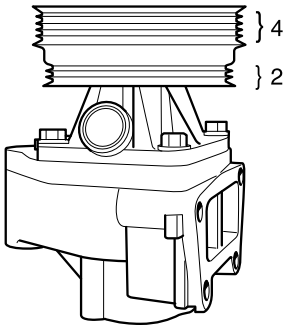

www.bergab.ru Берг АБ bergab@ya.ru Тел. (495)-228-06-21, факс (495) 223-3071

VKPA 82608

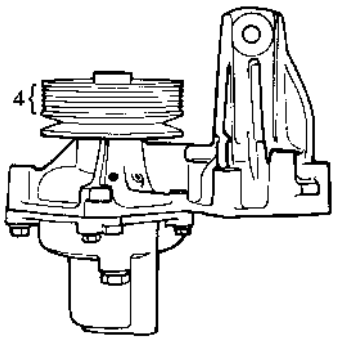

VKPA 82618

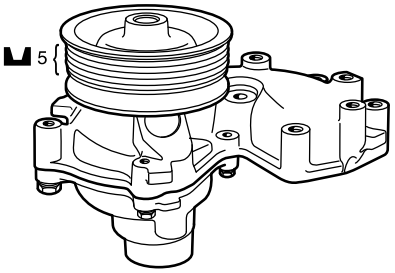

VKPA 82620

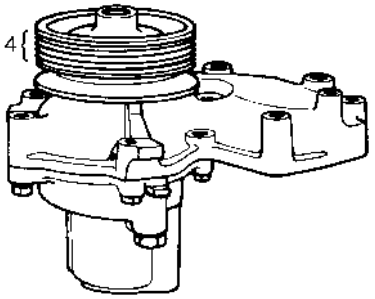

VKPA 82626

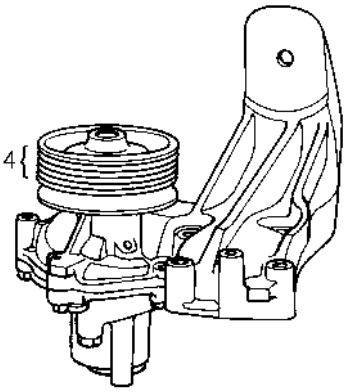

VKPA 82628

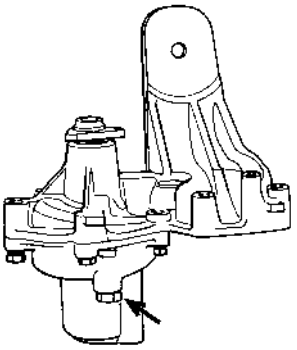

VKPA 82634

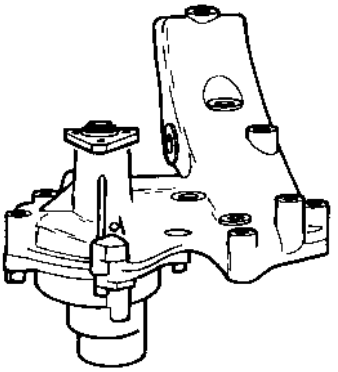

VKPA 82648

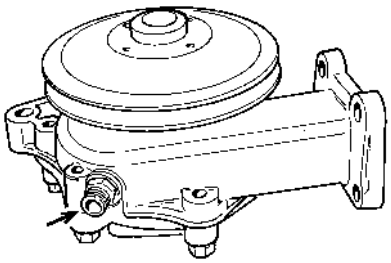

VKPA 82653

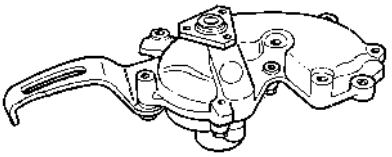

VKPA 82666

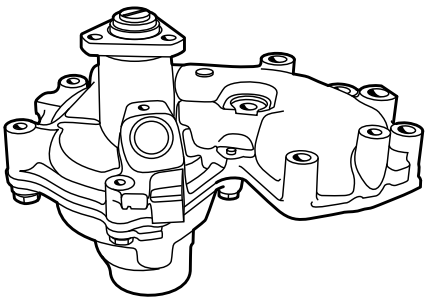

VKPA 82670

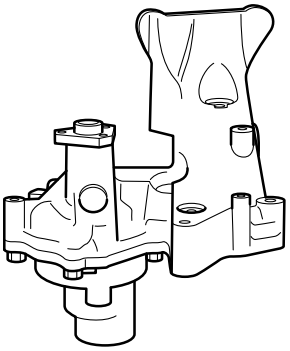

VKPA 82671

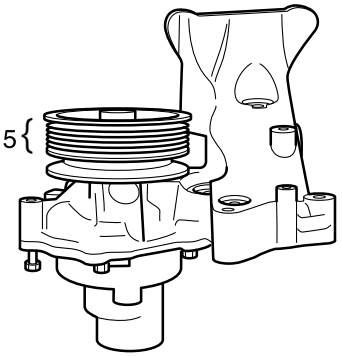

VKPA 83200

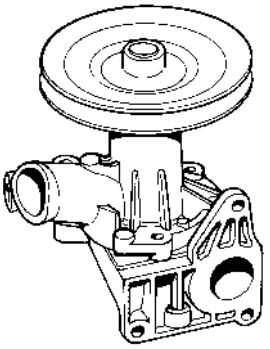

www.bergab.ru Берг АБ bergab@ya.ru Тел. (495)-228-06-21, факс (495) 223-3071

VKPA 83431

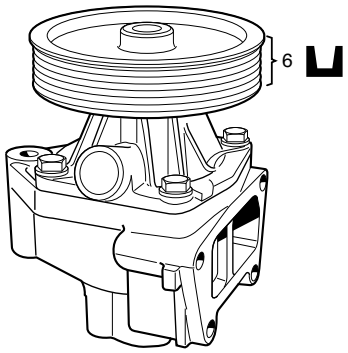

VKPA 83432

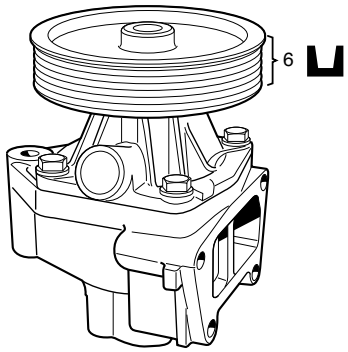

VKPA 85605

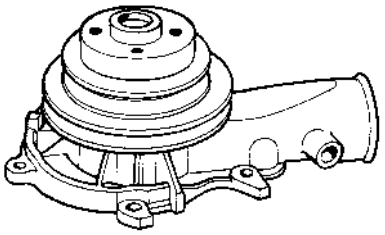

VKPA 85608

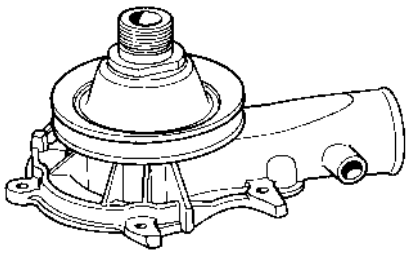

VKPA 85609

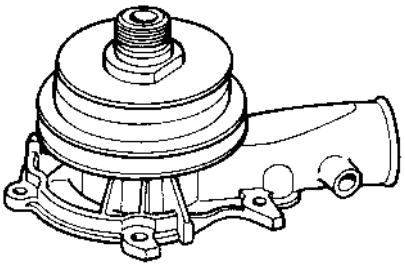

VKPA 86200

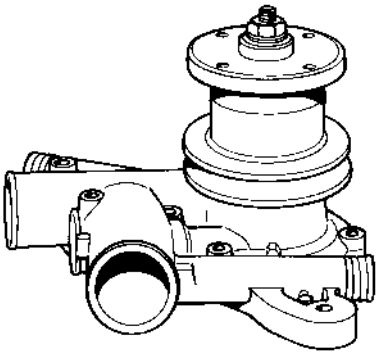

VKPA 86206

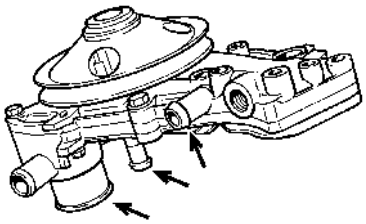

VKPA 86209

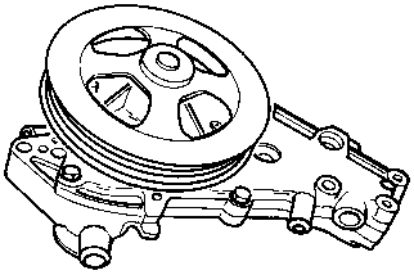

VKPA 86212

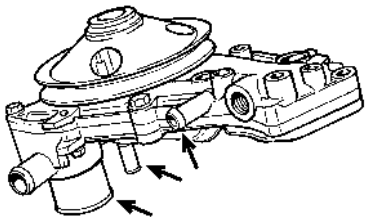

VKPA 86217

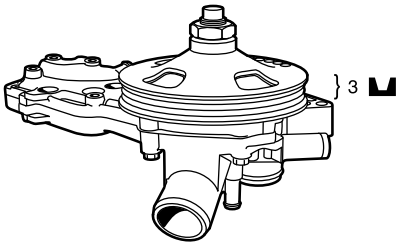

VKPA 86407

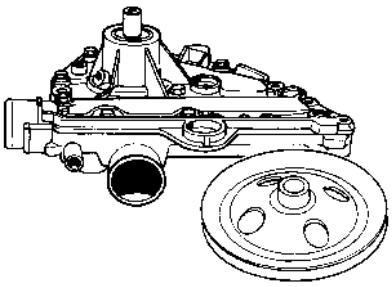

VKPA 88200

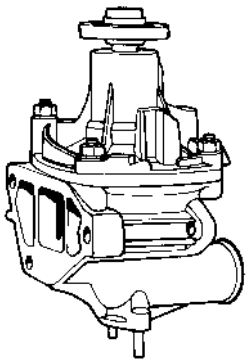

www.bergab.ru Берг АБ bergab@ya.ru Тел. (495)-228-06-21, факс (495) 223-3071

VKPA 91404

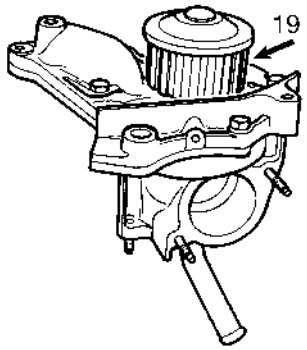

VKPA 91407

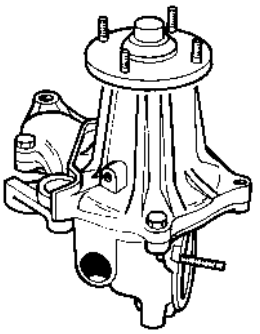

VKPA 91409

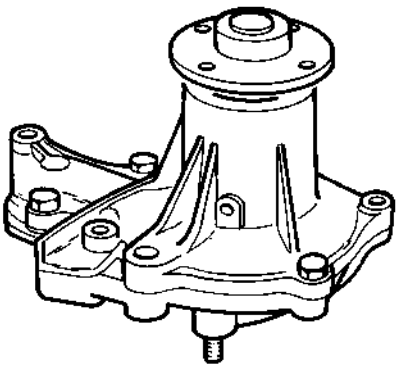

VKPA 91413

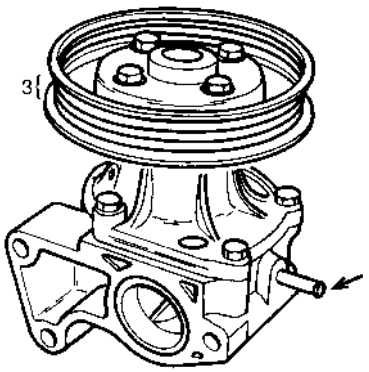

VKPA 91415

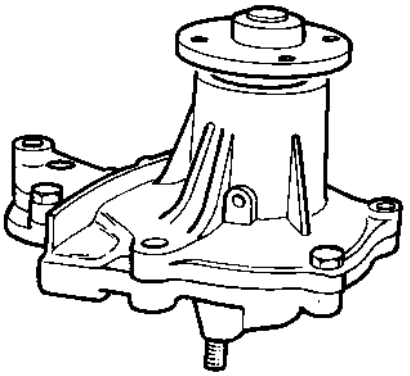

VKPA 91416

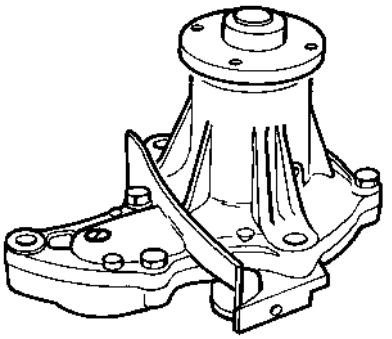

VKPA 91417

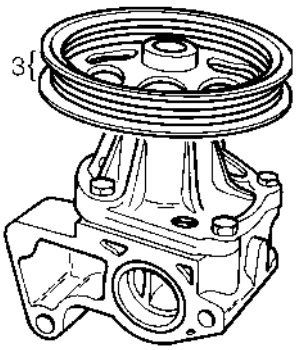

VKPA 91431

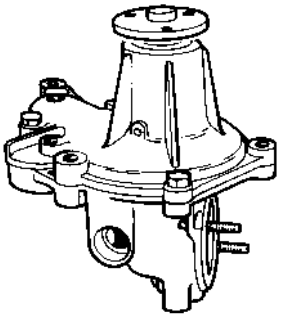

VKPA 91441

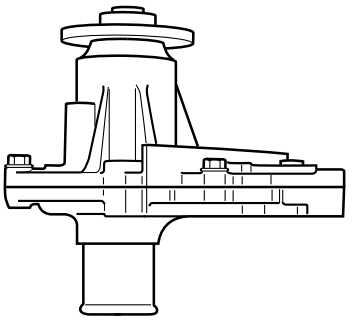

VKPA 91602

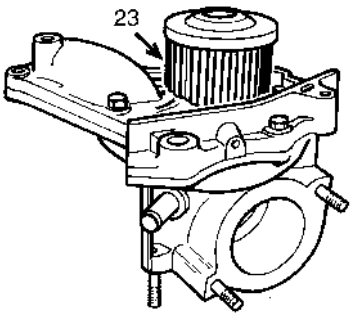

VKPA 91604

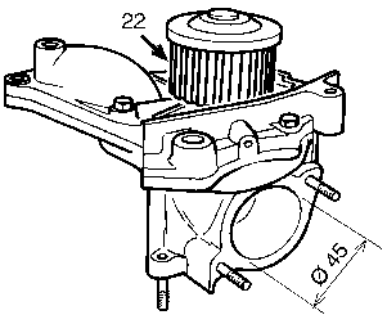

VKPA 91612

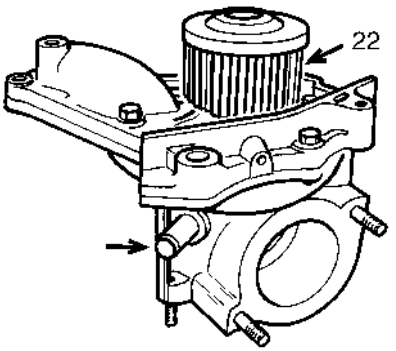

VKPA 91615

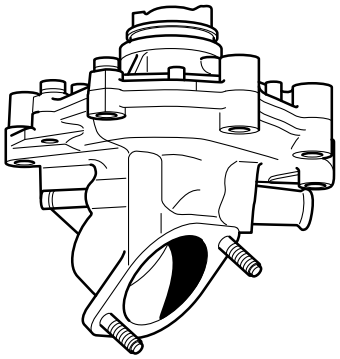

VKPC 81200

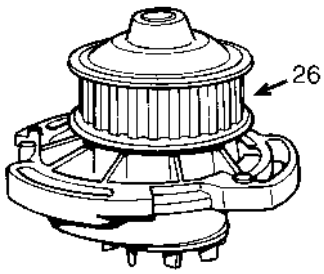

VKPC 81204

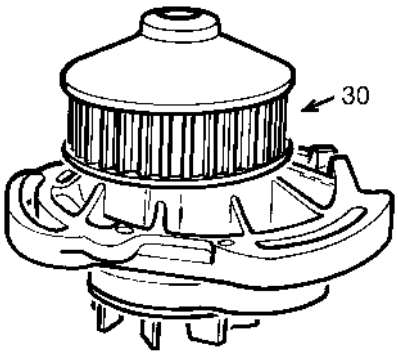

VKPC 81206

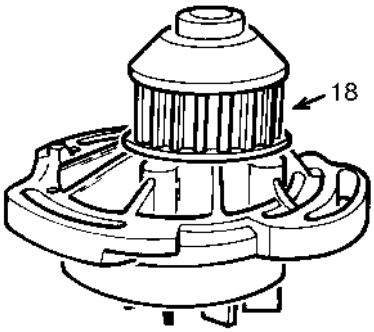

VKPC 81210

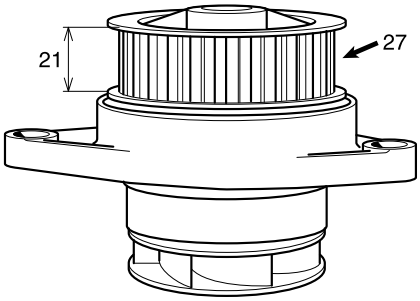

VKPC 81215

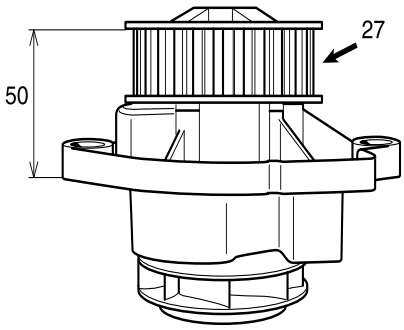

VKPC 81400

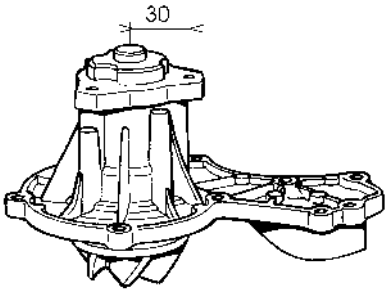

VKPC 81401

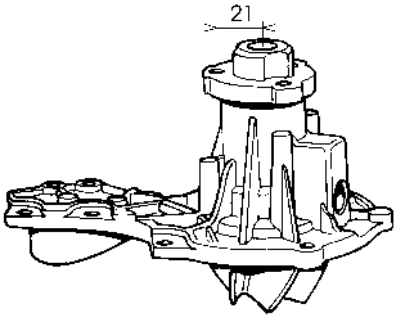

VKPC 81402

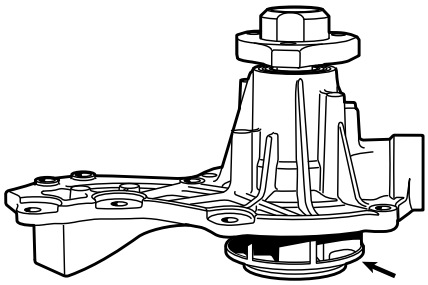

VKPC 81405

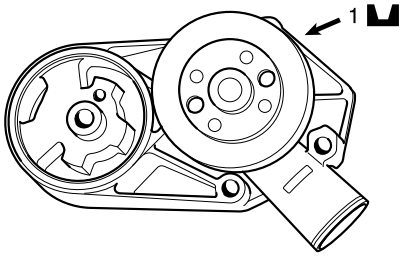

VKPC 81406

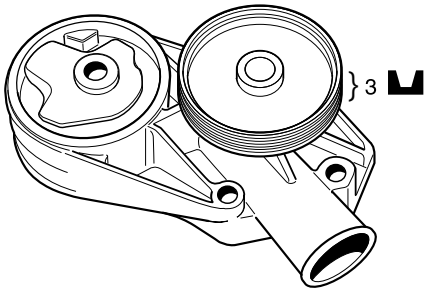

VKPC 81407

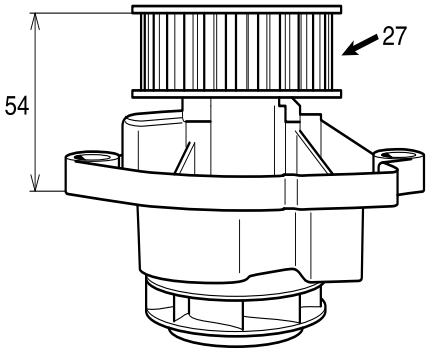

VKPC 81408

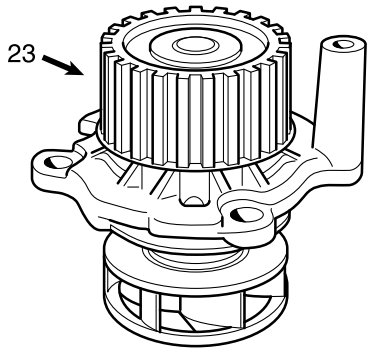

VKPC 81409

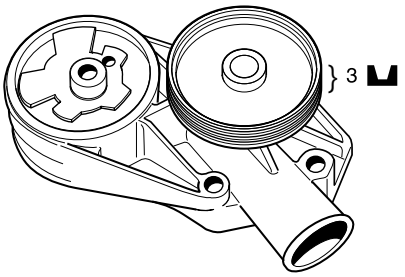

VKPC 81411

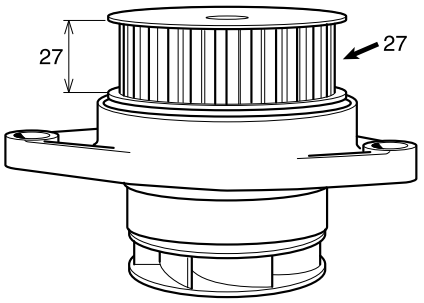

VKPC-81412

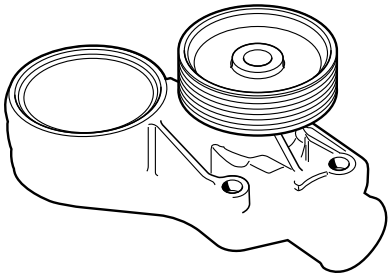

VKPC 81416

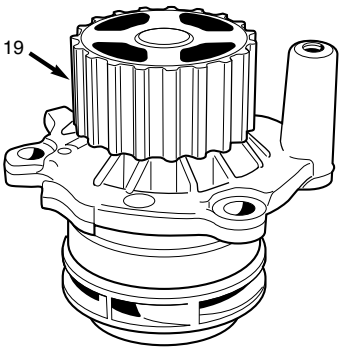

VKPC 81417

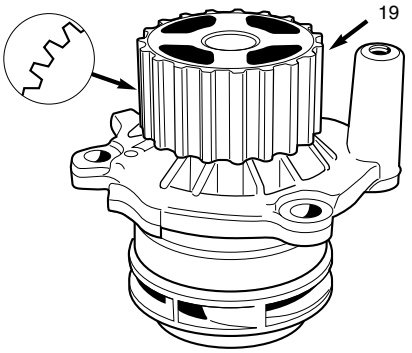

VKPC 81419

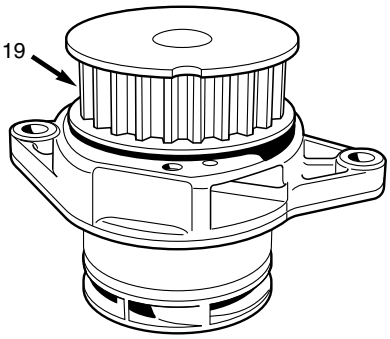

VKPC 81601

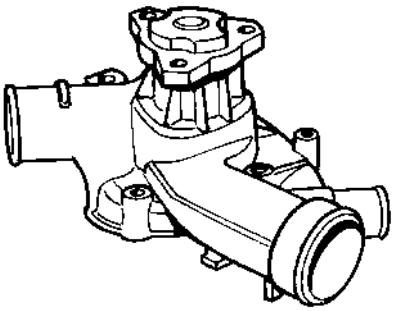

VKPC 81602

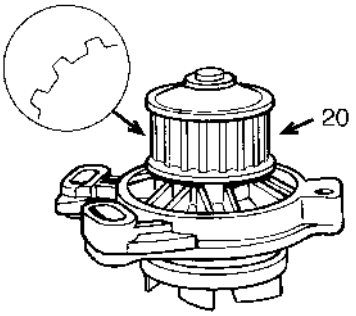

VKPC 81603

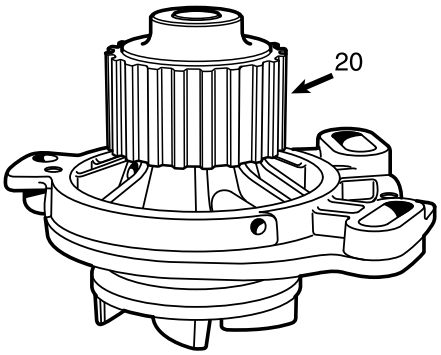

VKPC 81605

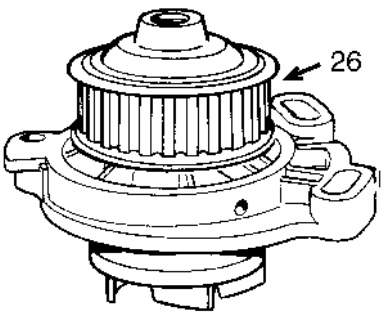

VKPC 81606

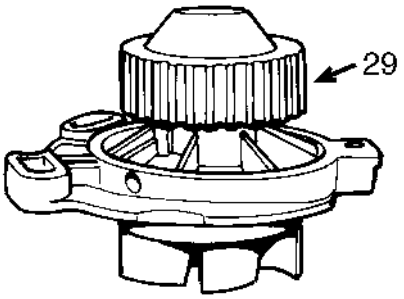

www.bergab.ru Берг АБ bergab@ya.ru Тел. (495)-228-06-21, факс (495) 223-3071

www.bergab.ru Берг АБ bergab@ya.ru Тел. (495)-228-06-21, факс (495) 223-3071

VKPC 81607

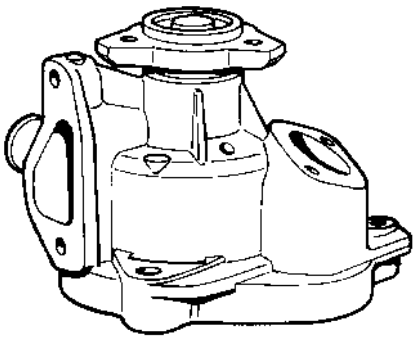

VKPC 81608

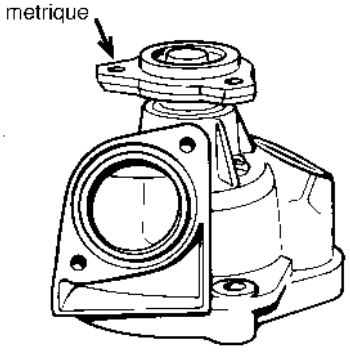

VKPC 81609

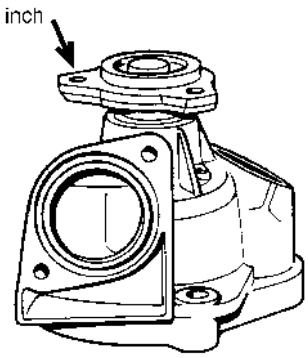

VKPC 81610

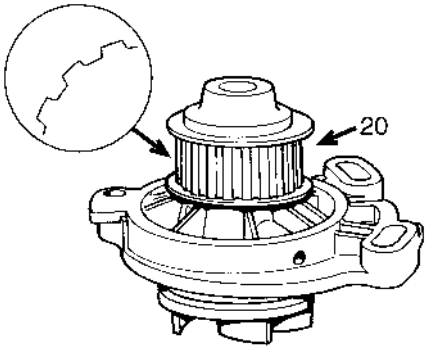

VKPC 81611

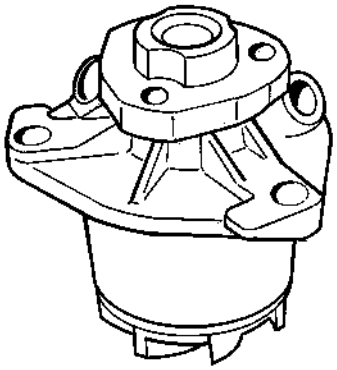

VKPC 81612

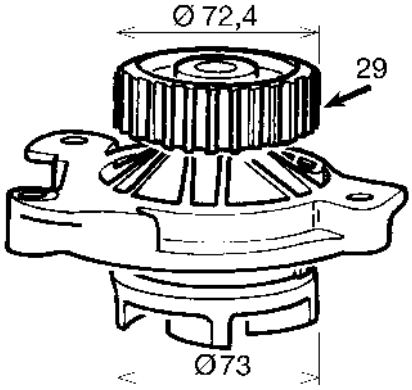

VKPC 81615

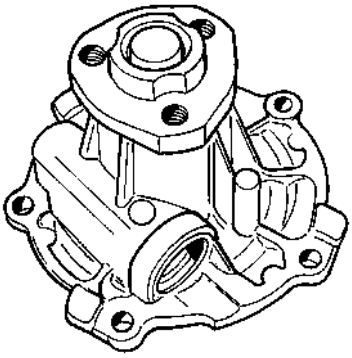

VKPC 81620

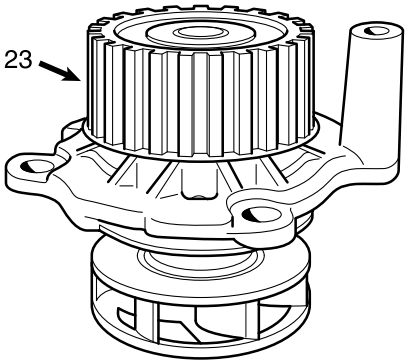

VKPC 81622

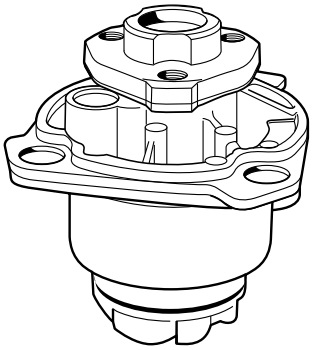

VKPC 81623

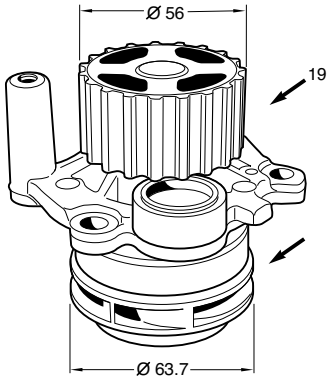

VKPC 81624

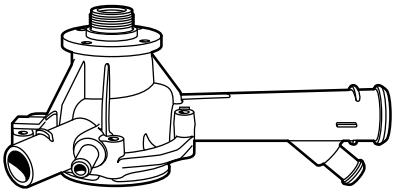

VKPC 81625

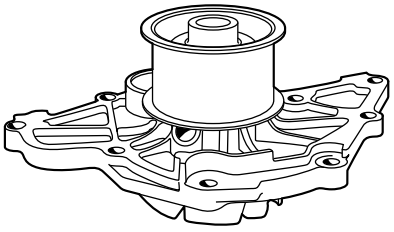

www.bergab.ru Берг АБ bergab@ya.ru Тел. (495)-228-06-21, факс (495) 223-3071

VKPC 81626

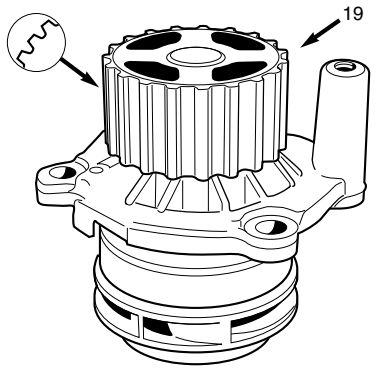

VKPC 81800

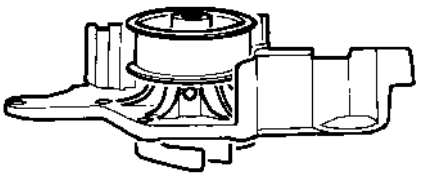

VKPC 81802

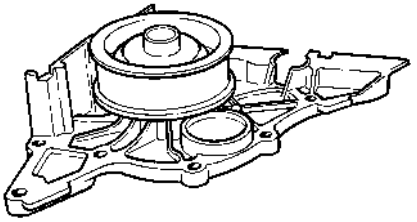

VKPC 81803

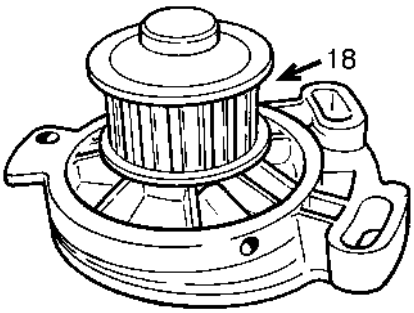

VKPC 81805

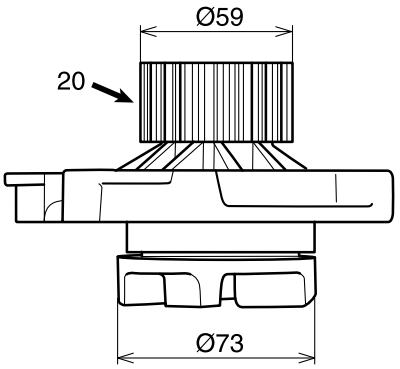

VKPC 81806

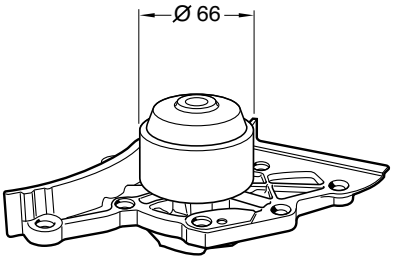

VKPC 81807

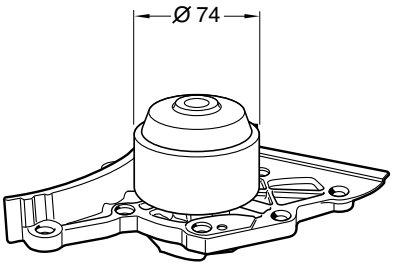

VKPC 81811

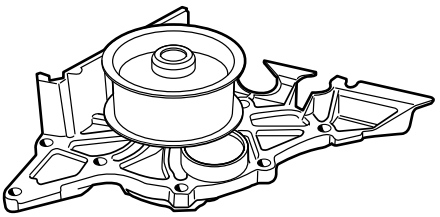

VKPC 82200

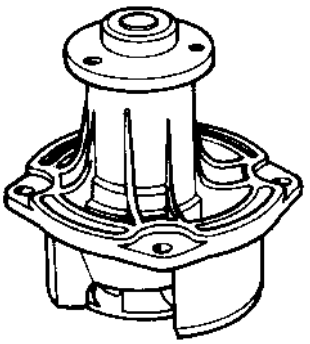

VKPC 82201

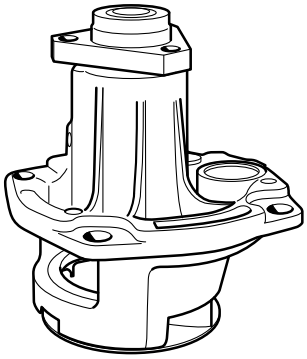

VKPC 82204

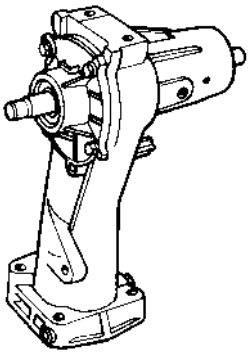

VKPC 82205

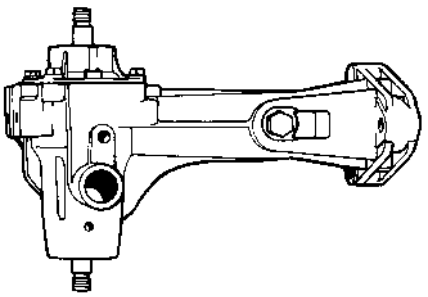

www.bergab.ru Берг АБ bergab@ya.ru Тел. (495)-228-06-21, факс (495) 223-3071

VKPC 82206

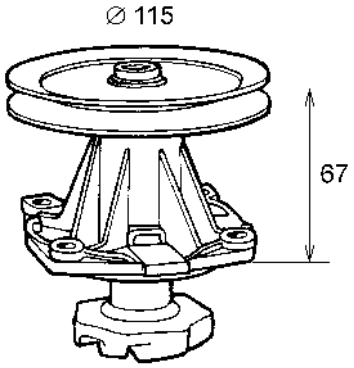

VKPC 82208

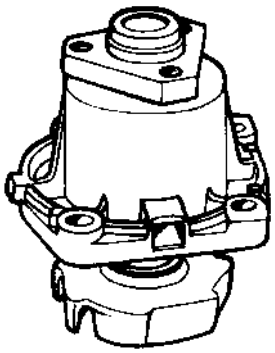

VKPC 82210

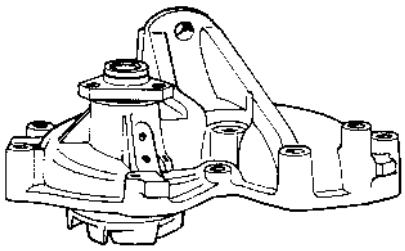

VKPC 82214

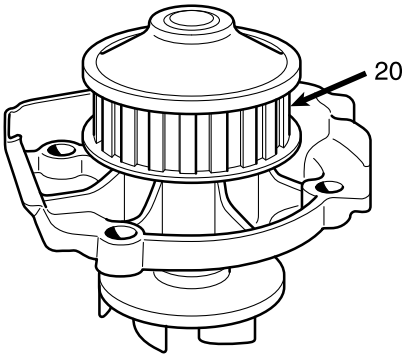

VKPC 82216

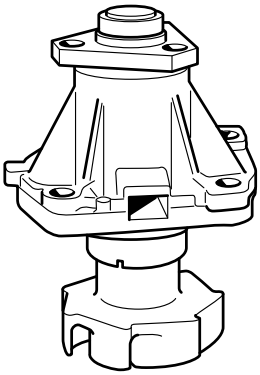

VKPC 82218

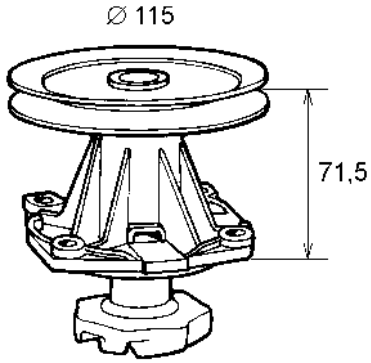

VKPC 82224

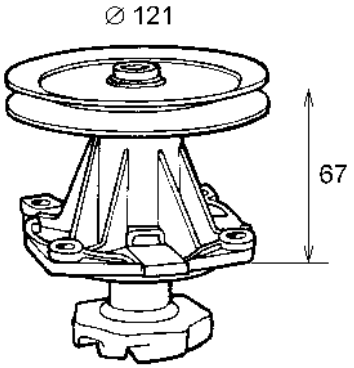

VKPC 82230

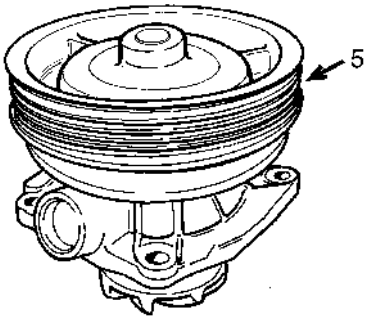

VKPC 82245

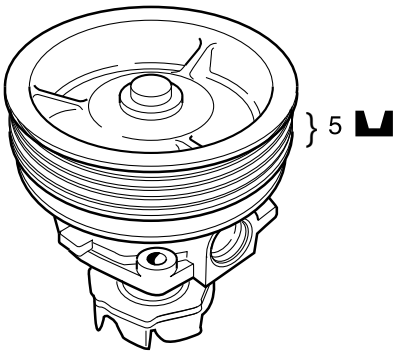

VKPC 82246

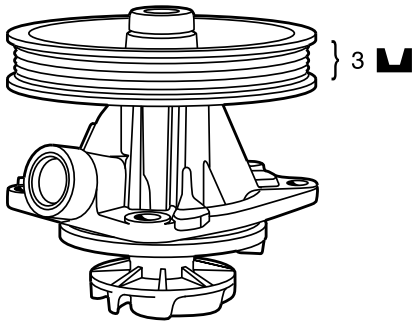

VKPC 82247

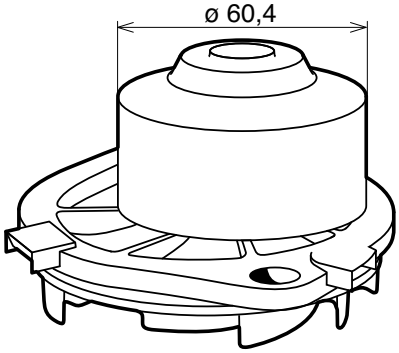

VKPC 82249

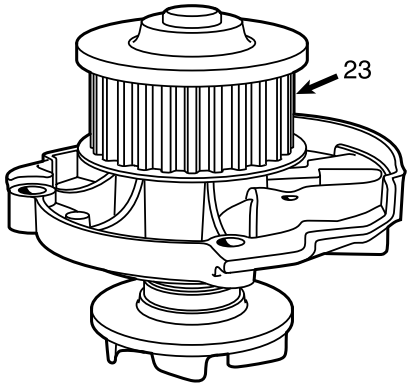

www.bergab.ru Берг АБ bergab@ya.ru Тел. (495)-228-06-21, факс (495) 223-3071

VKPC 82250

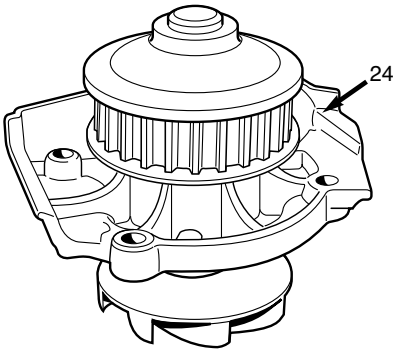

VKPC 82404

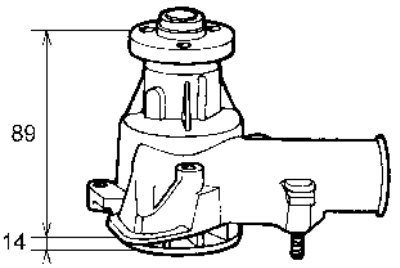

VKPC 82408

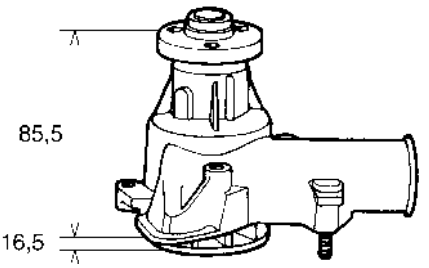

VKPC 82409

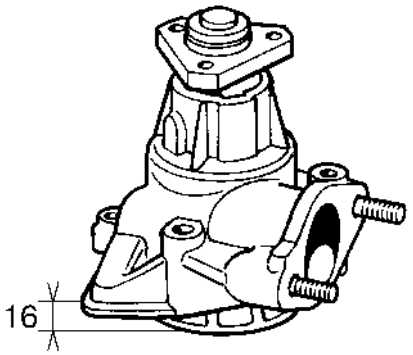

VKPC 82410

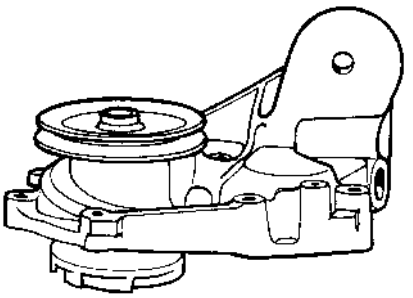

VKPC 82412

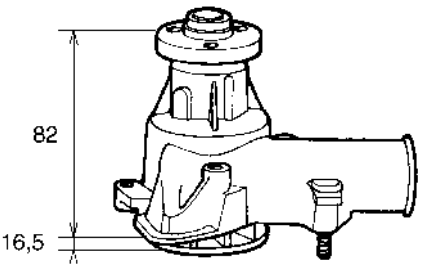

VKPC 82413

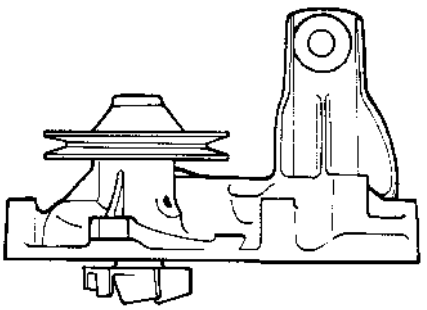

VKPC 82415

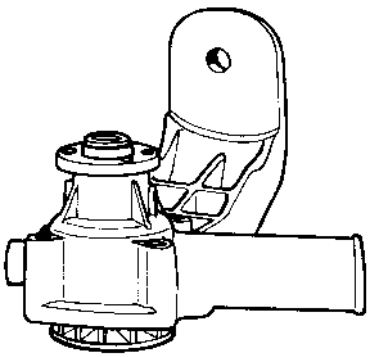

VKPC 82416

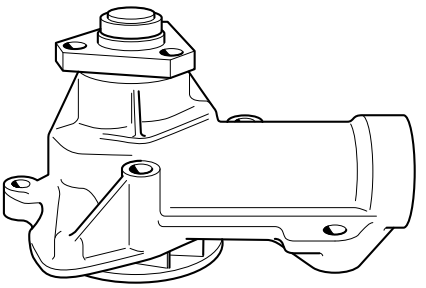

VKPC 82418

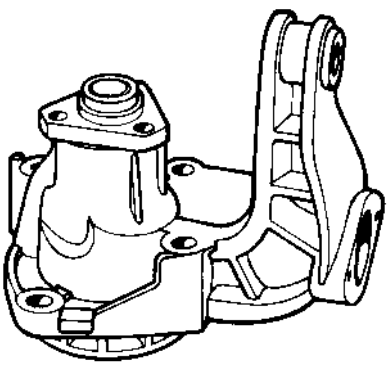

VKPC 82419

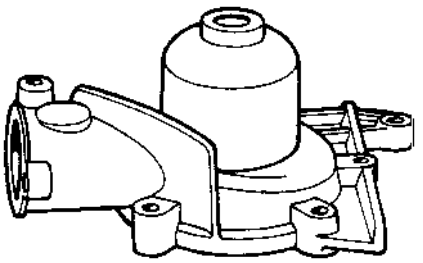

VKPC 82420

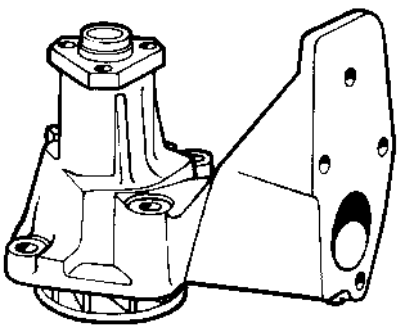

www.bergab.ru Берг АБ bergab@ya.ru Тел. (495)-228-06-21, факс (495) 223-3071

VKPC 82423

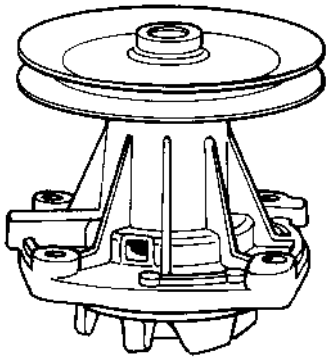

VKPC 82424

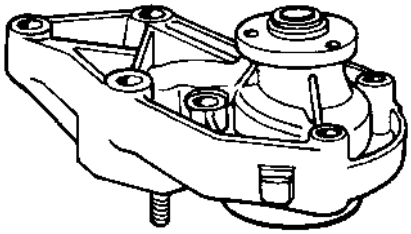

VKPC 82426

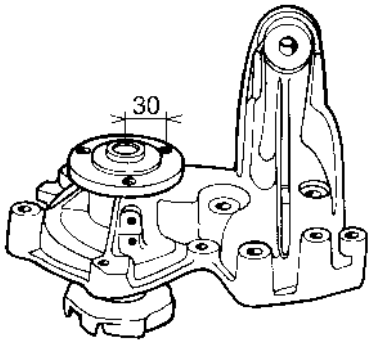

VKPC 82428

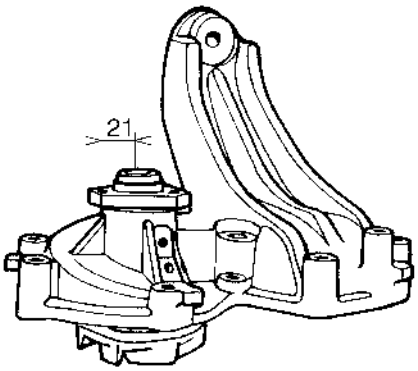

VKPC 82429

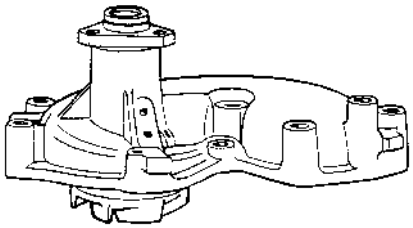

VKPC 82431

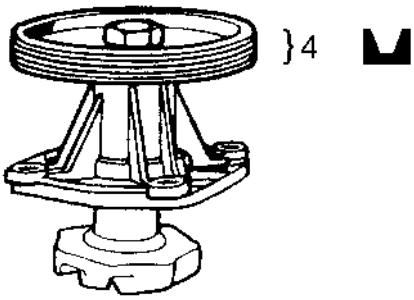

VKPC 82432

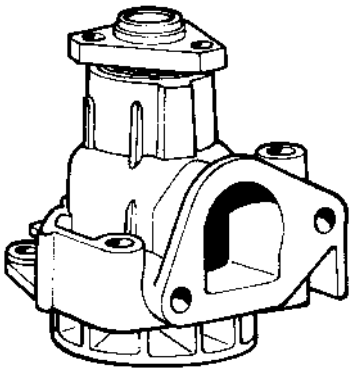

VKPC 82434

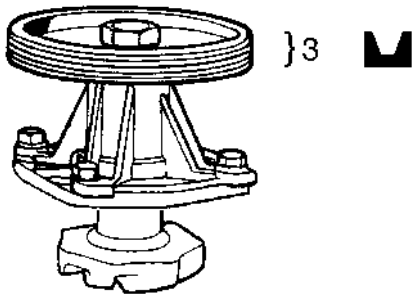

VKPC 82436

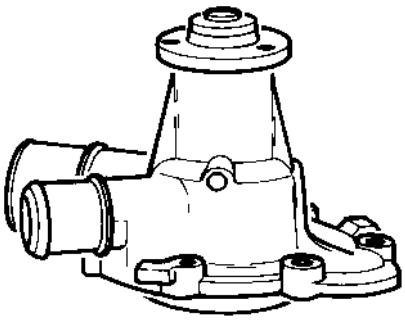

VKPC 82437

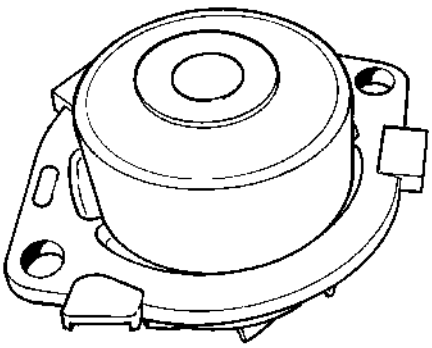

VKPC 82441

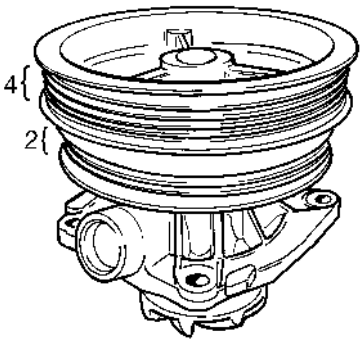

VKPC 82450

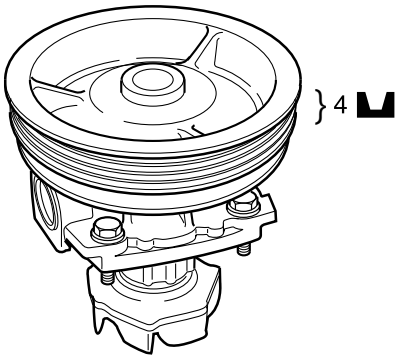

www.bergab.ru Берг АБ bergab@ya.ru Тел. (495)-228-06-21, факс (495) 223-3071

VKPC 82451

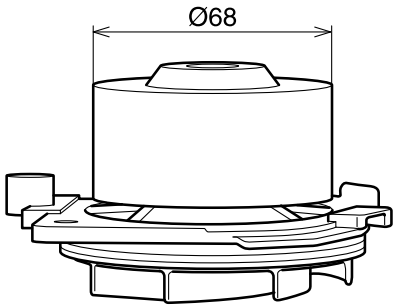

VKPC 82600

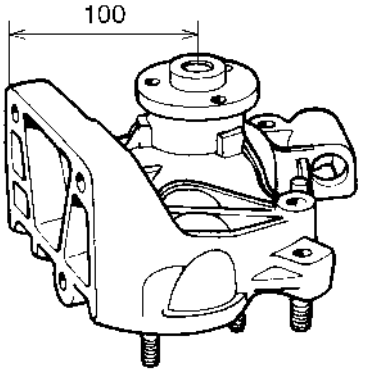

VKPC 82604

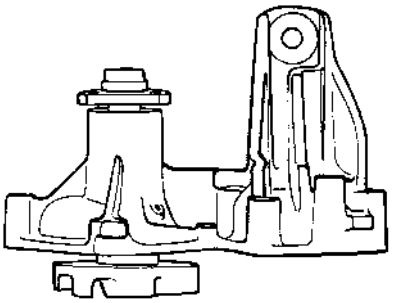

VKPC 82606

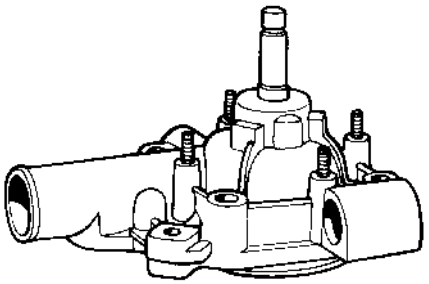

VKPC 82608

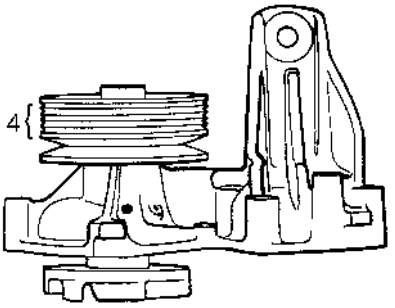

VKPC 82614

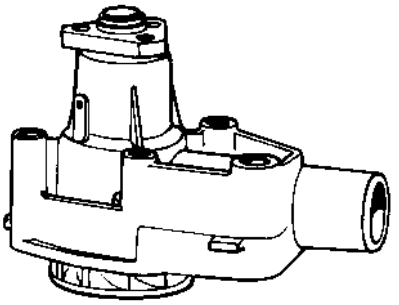

VKPC 82615

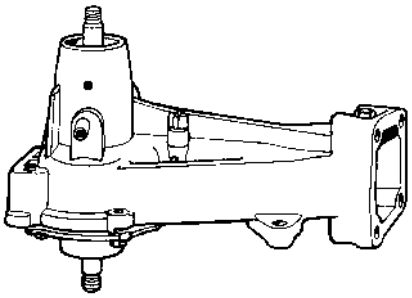

VKPC 82616

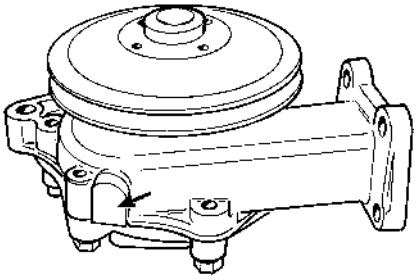

VKPC 82618

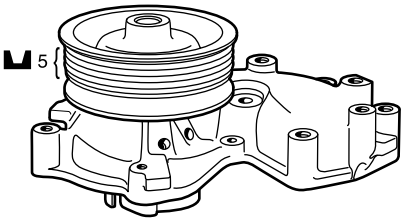

VKPC 82619

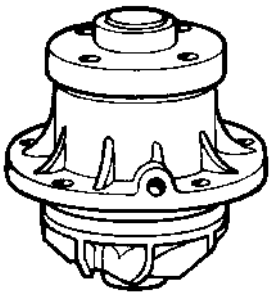

VKPC 82620

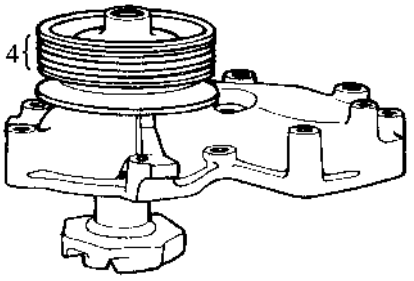

VKPC 82621

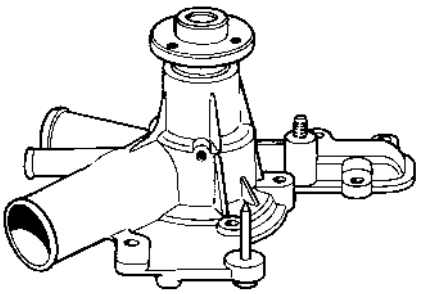

www.bergab.ru Берг АБ bergab@ya.ru Тел. (495)-228-06-21, факс (495) 223-3071

www.bergab.ru Берг АБ bergab@ya.ru Тел. (495)-228-06-21, факс (495) 223-3071

VKPC 82622

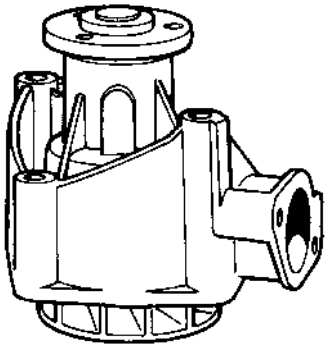

VKPC 82623

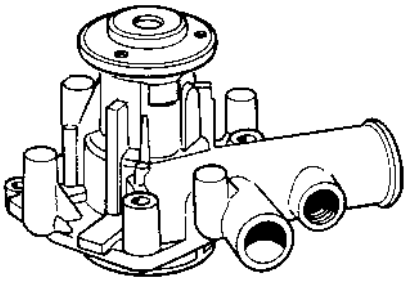

VKPC 82626

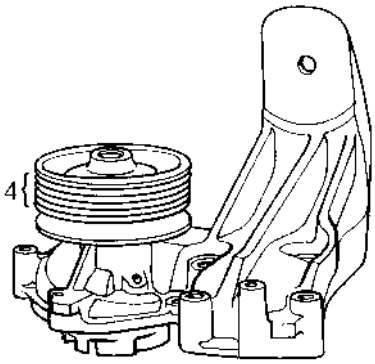

VKPC 82629

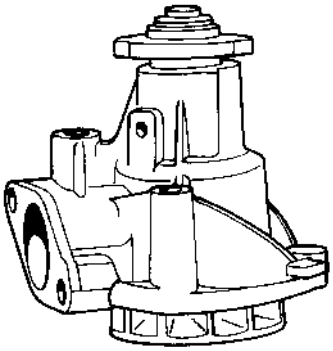

VKPC 82630

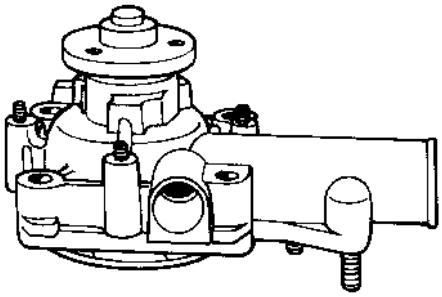

VKPC 82631

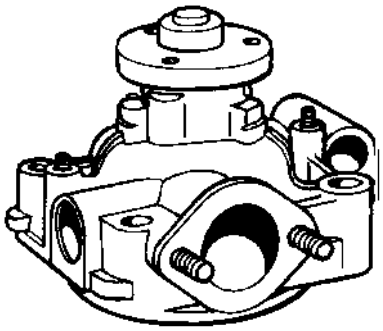

VKPC 82632

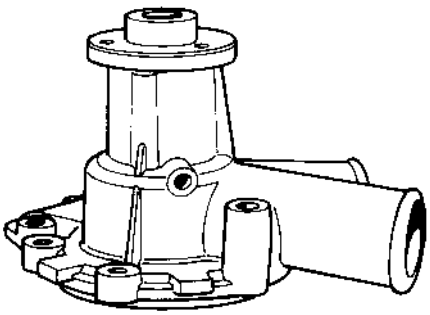

VKPC 82633

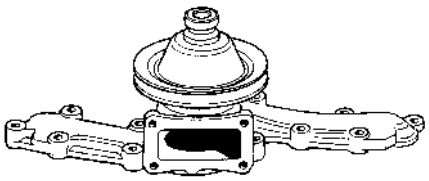

VKPC 82635

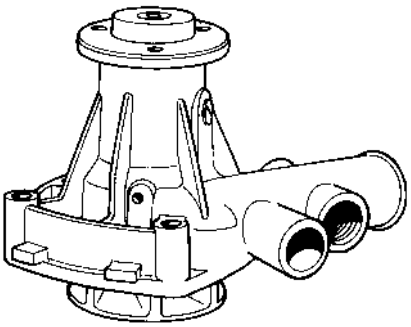

VKPC 82636

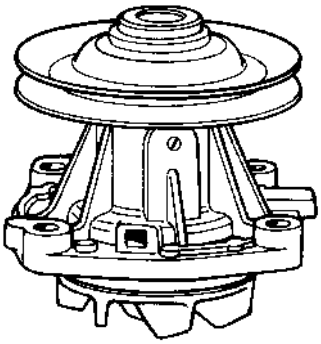

VKPC 82638

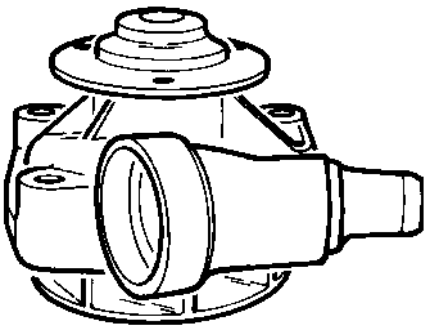

VKPC 82642

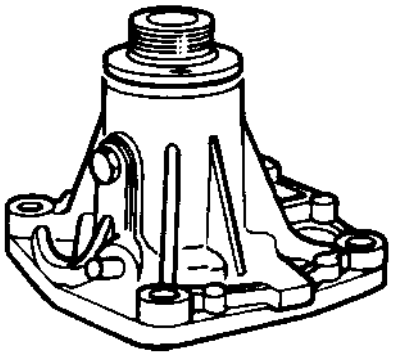

www.bergab.ru Берг АБ bergab@ya.ru Тел. (495)-228-06-21, факс (495) 223-3071

VKPC 82643

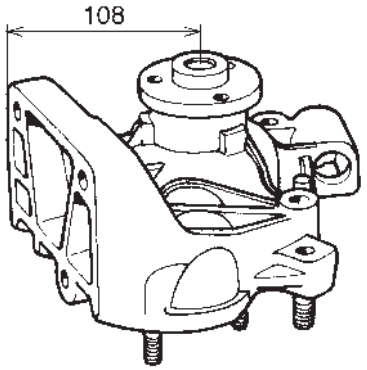

VKPC 82645

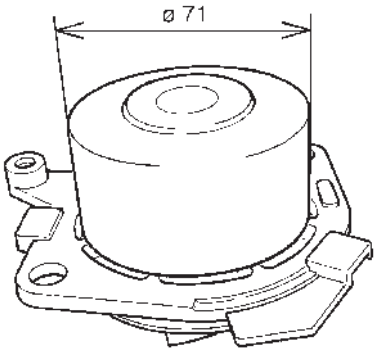

VKPC 82646

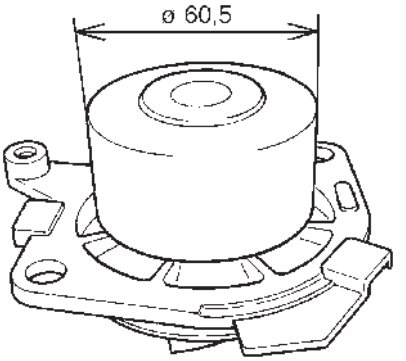

VKPC 82647

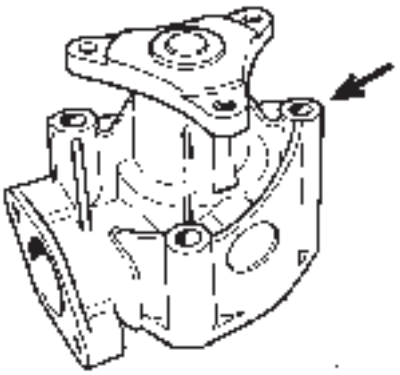

VKPC 82649

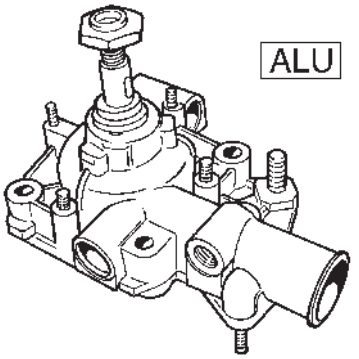

VKPC 82650

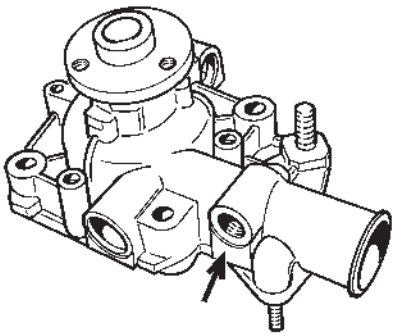

VKPC 82651

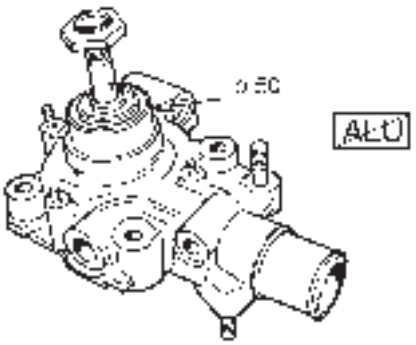

VKPC 82652

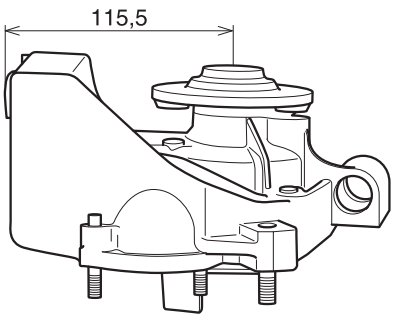

VKPC 82660

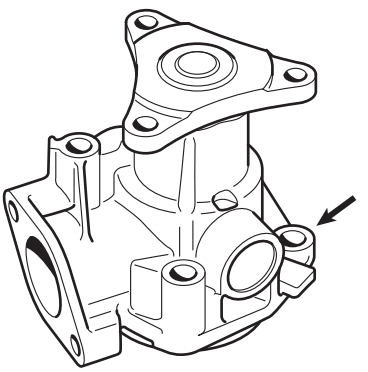

VKPC 82665

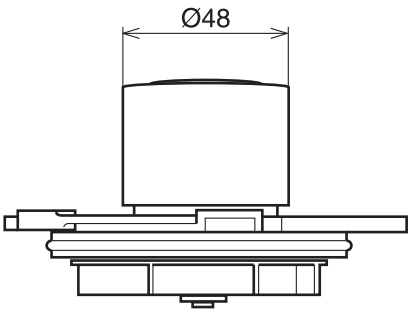

VKPC 82800

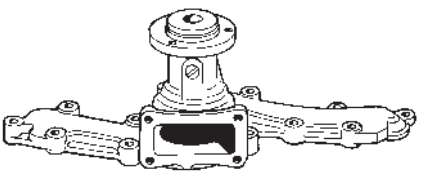

VKPC 82810

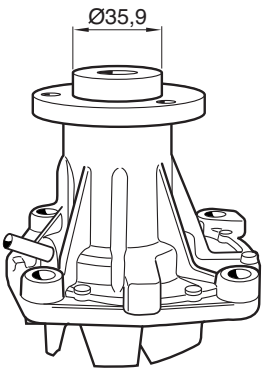

VKPC 83200

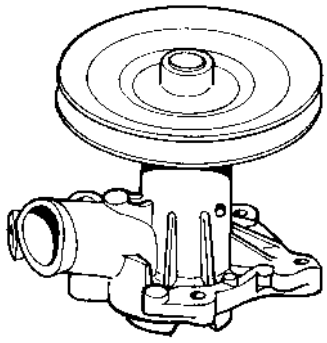

VKPC 83203

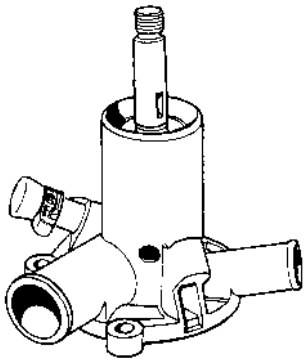

VKPC 83205

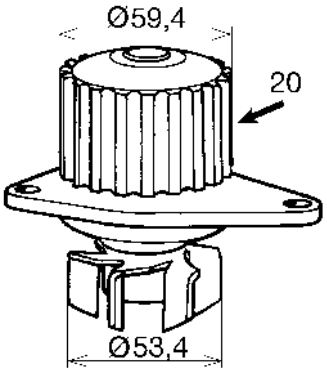

VKPC 83206

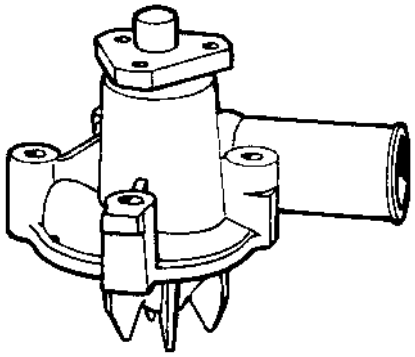

VKPC 83401

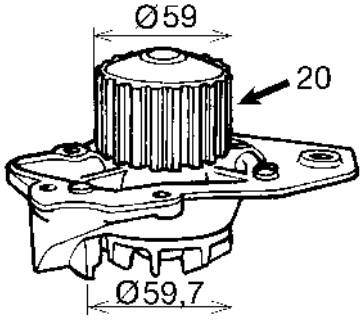

VKPC 83403

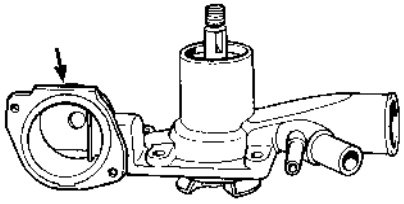

VKPC 83408

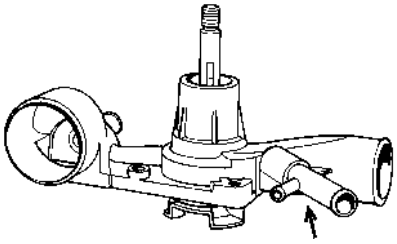

VKPC 83409

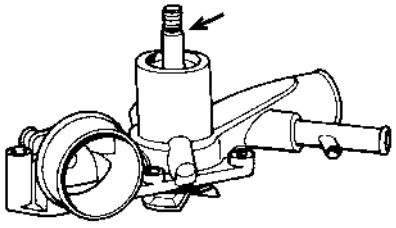

VKPC 83411

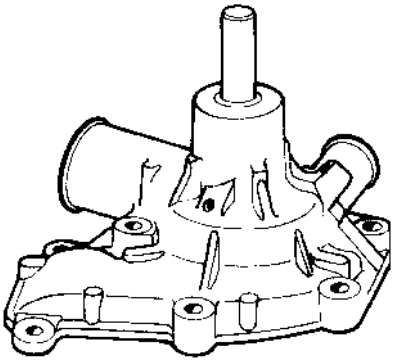

VKPC 83417

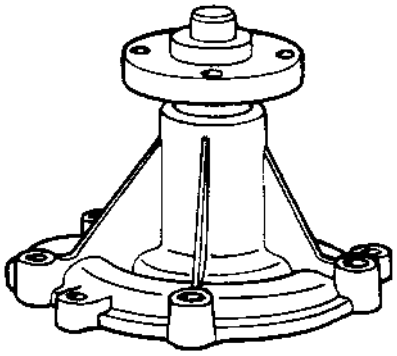

VKPC 83420

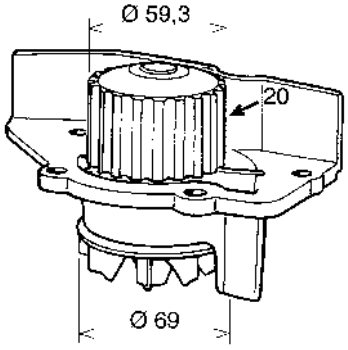

VKPC 83423

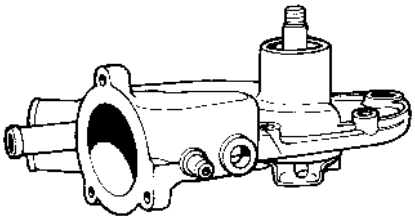

www.bergab.ru Берг АБ bergab@ya.ru Тел. (495)-228-06-21, факс (495) 223-3071

VKPC 83424

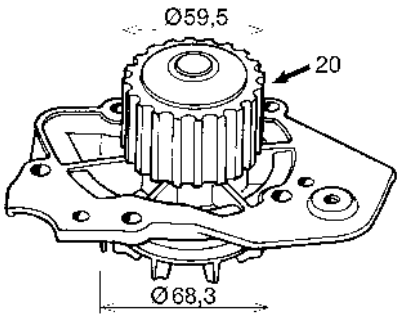

VKPC 83425

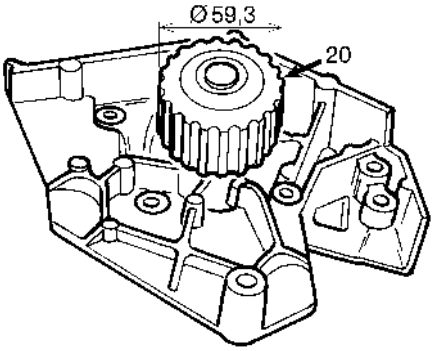

VKPC 83428

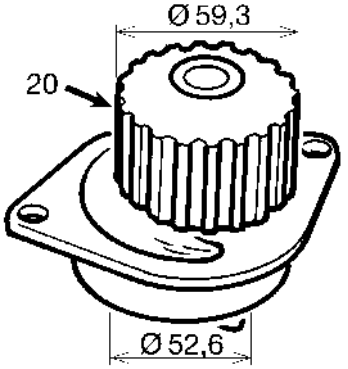

VKPC 83430

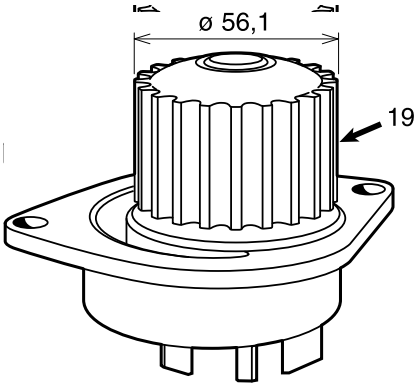

VKPC 83603

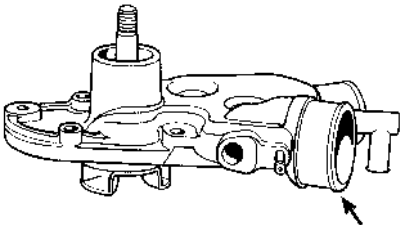

VKPC 83604

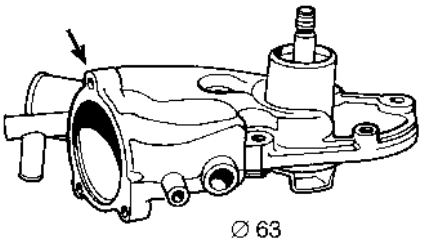

VKPC 83605

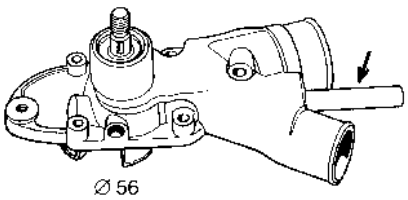

VKPC 83607

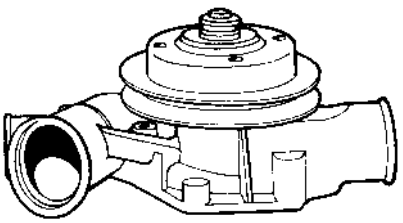

VKPC 83612

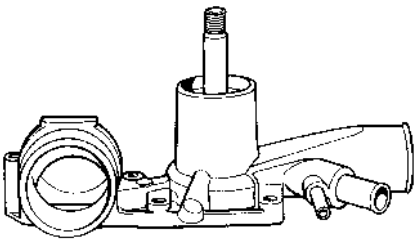

VKPC 83614

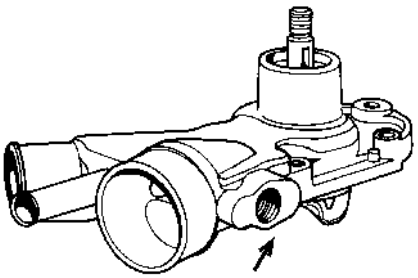

VKPC 83615

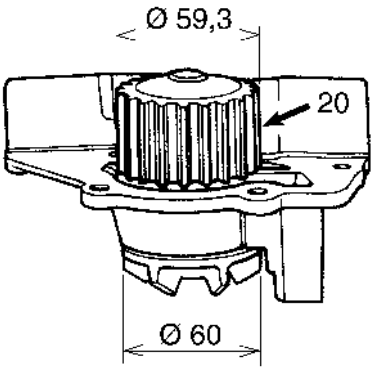

VKPC 83616

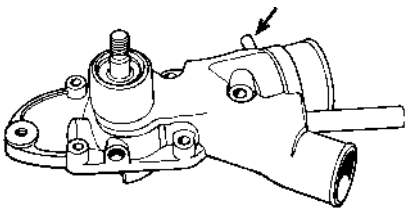

www.bergab.ru Берг АБ bergab@ya.ru Тел. (495)-228-06-21, факс (495) 223-3071

VKPC 83617

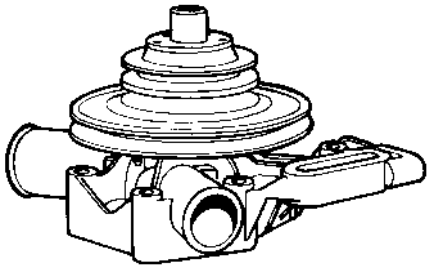

VKPC 83618

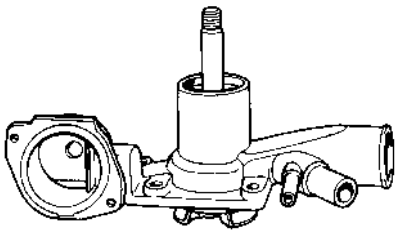

VKPC 83620

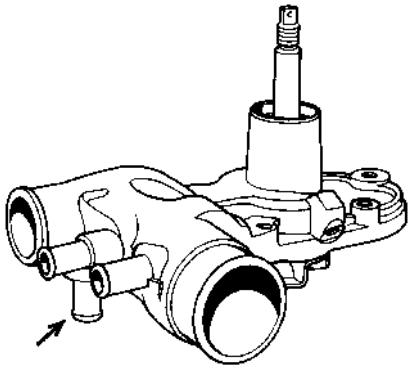

VKPC 83622

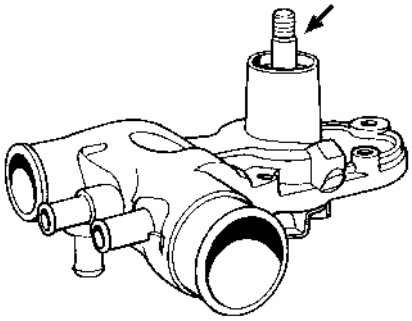

VKPC 83624

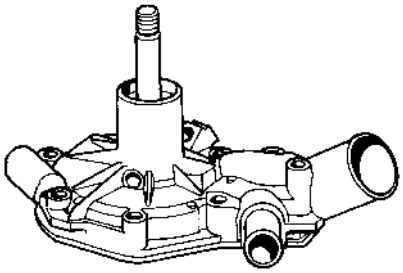

VKPC 83625

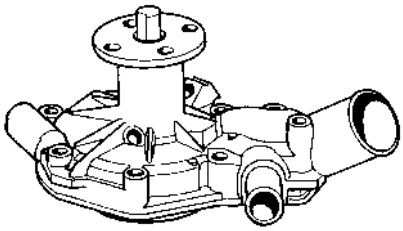

VKPC 83626

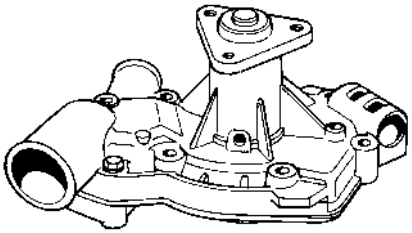

VKPC 83627

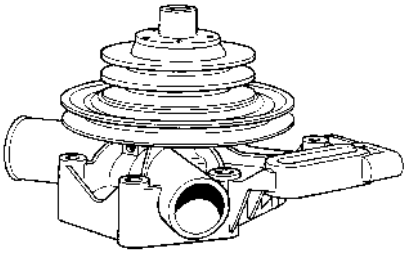

VKPC 83628

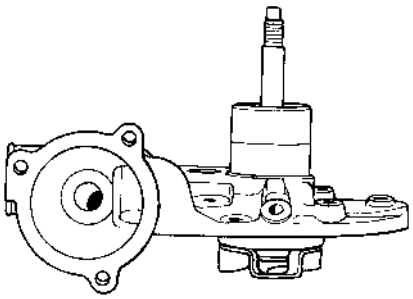

VKPC 83630

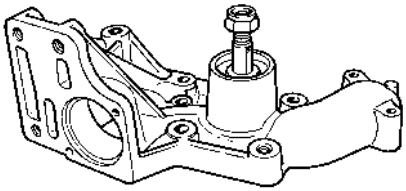

VKPC 83635

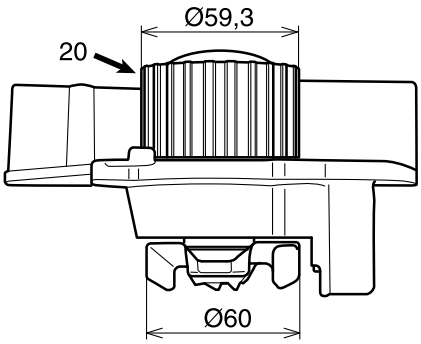

VKPC 83636

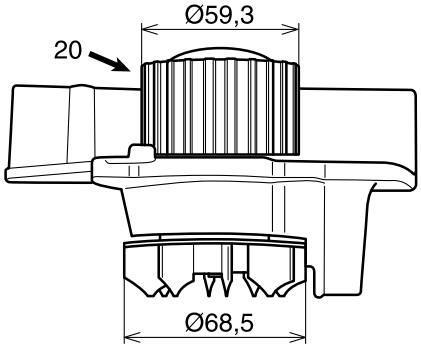

www.bergab.ru Берг АБ bergab@ya.ru Тел. (495)-228-06-21, факс (495) 223-3071

VKPC 83637

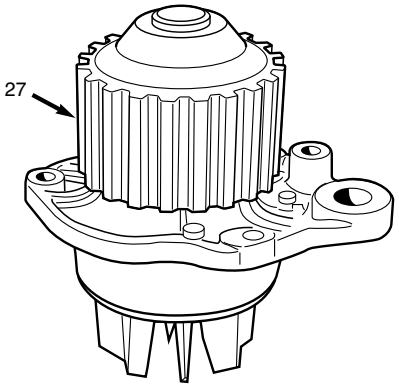

VKPC 83639

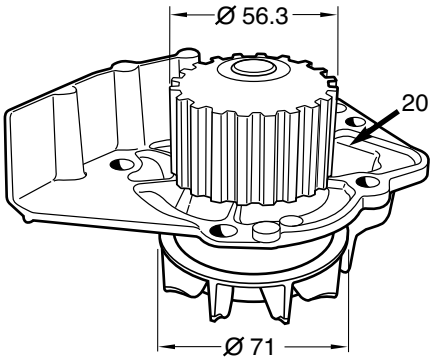

VKPC 83810

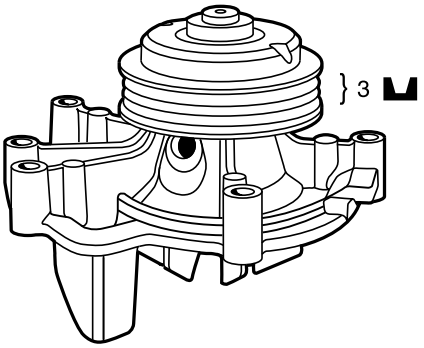

VKPC 83811

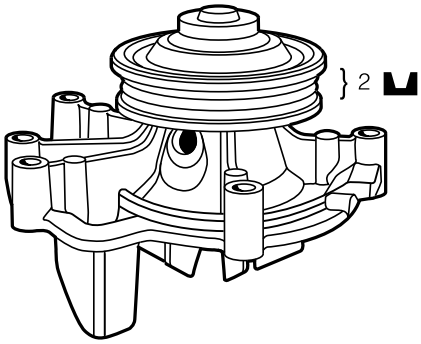

VKPC 84200

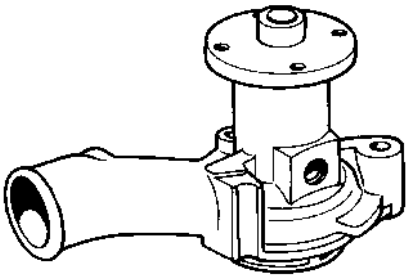

VKPC 84201

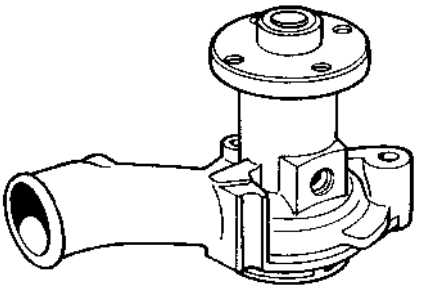

VKPC 84202

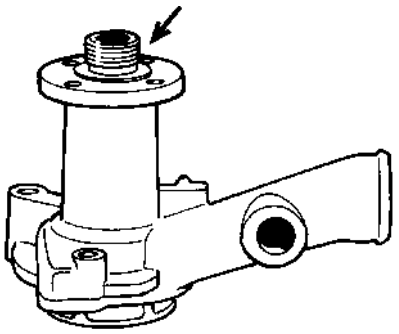

VKPC 84205

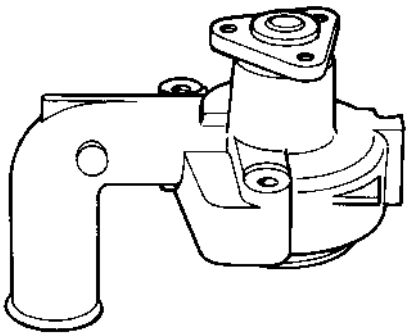

VKPC 84206

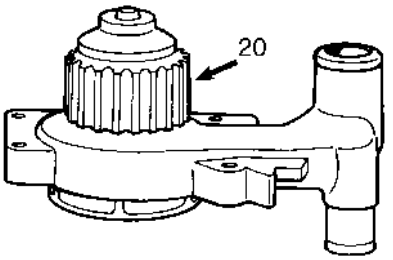

VKPC 84207

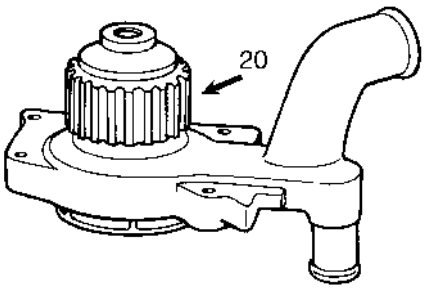

VKPC 84208

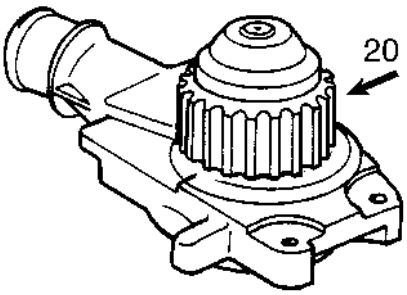

VKPC 84209

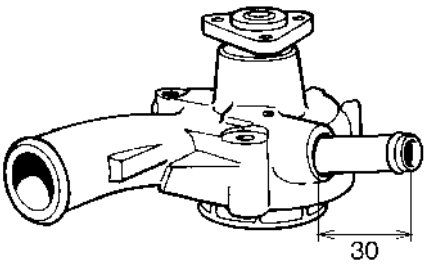

www.bergab.ru Берг АБ bergab@ya.ru Тел. (495)-228-06-21, факс (495) 223-3071

VKPC 84210

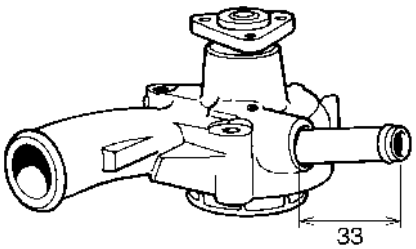

VKPC 84215

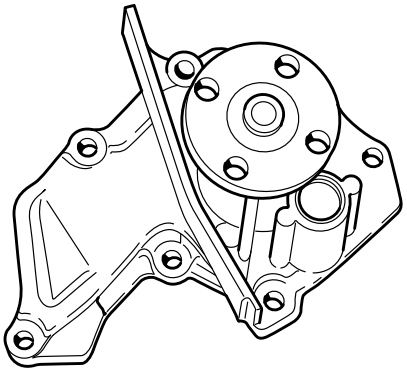

VKPC 84216

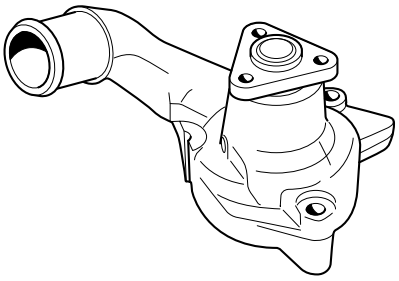

VKPC 84400

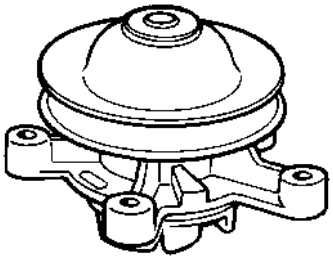

VKPC 84403

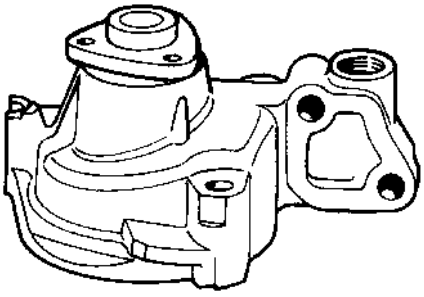

VKPC 84405

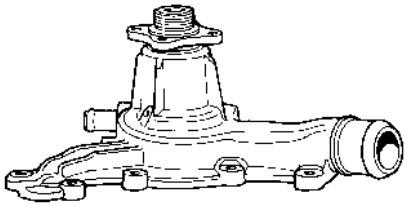

VKPC 84406

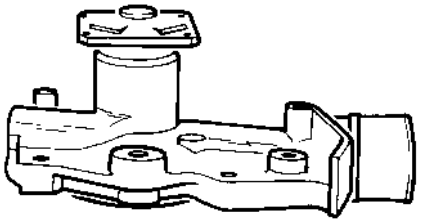

VKPC 84407

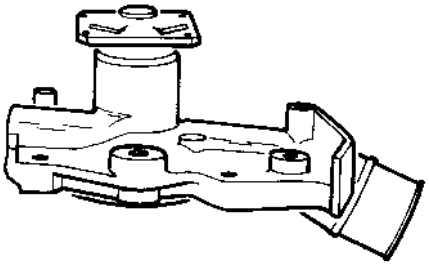

VKPC 84408

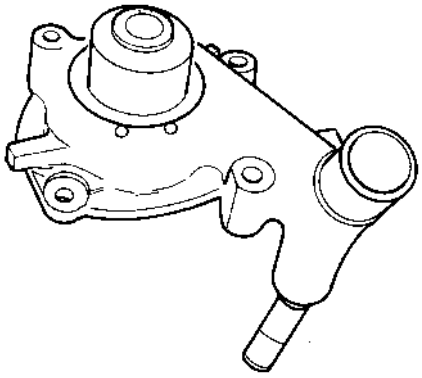

VKPC 84409

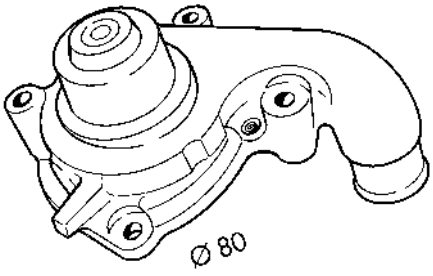

VKPC 84410

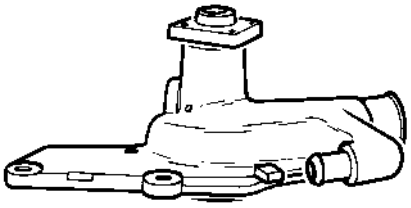

VKPC 84411

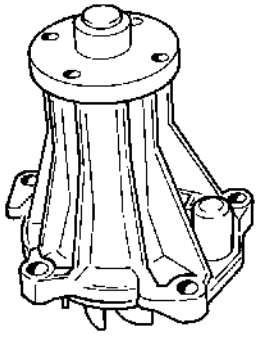

www.bergab.ru Берг АБ bergab@ya.ru Тел. (495)-228-06-21, факс (495) 223-3071

VKPC 84412

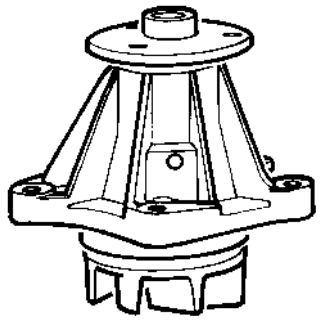

VKPC 84415

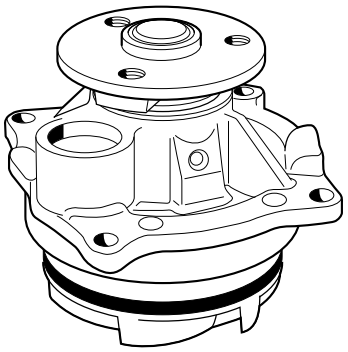

VKPC 84416

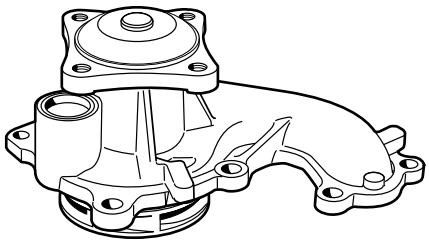

VKPC 84600

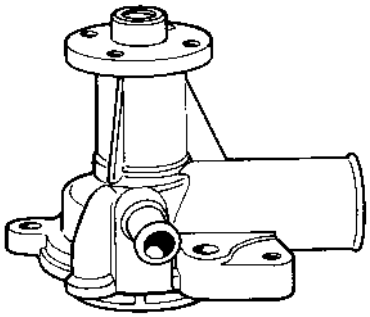

VKPC 84601

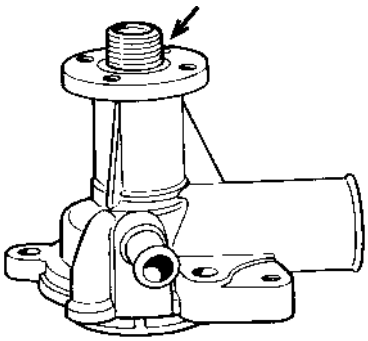

VKPC 84603

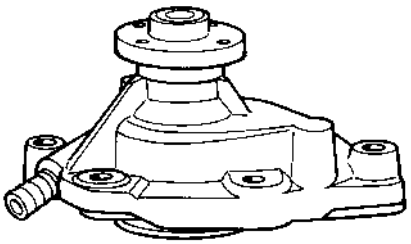

VKPC 84606

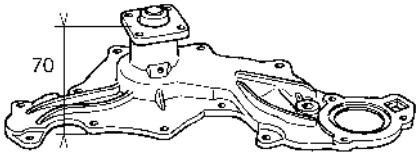

VKPC 84607

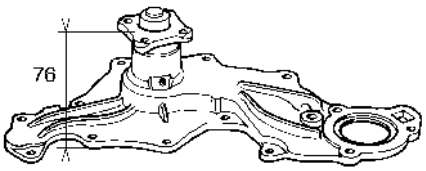

VKPC 84608

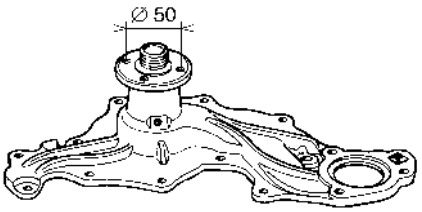

VKPC 84609

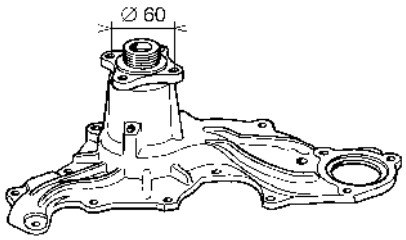

VKPC 84610

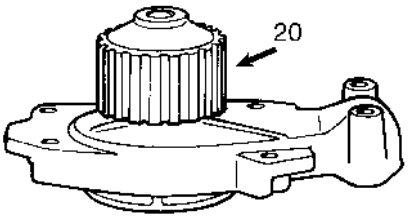

VKPC 84611

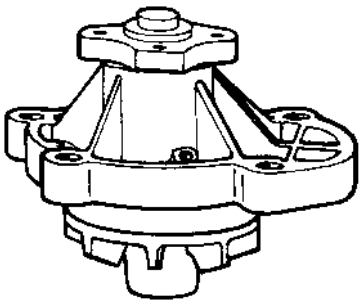

www.bergab.ru Берг АБ bergab@ya.ru Тел. (495)-228-06-21, факс (495) 223-3071

www.bergab.ru Берг АБ bergab@ya.ru Тел. (495)-228-06-21, факс (495) 223-3071

VKPC 84612

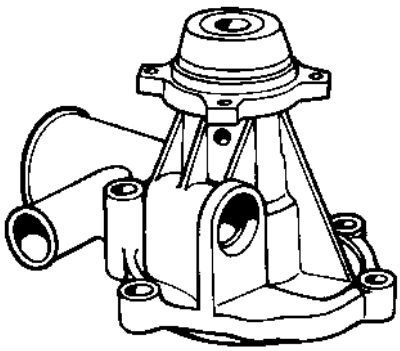

VKPC 84613

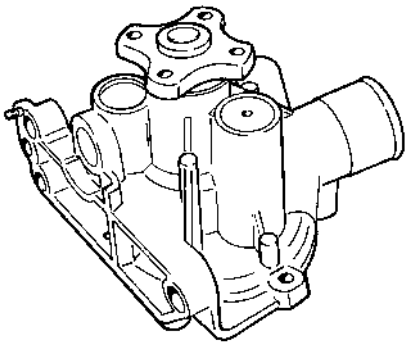

VKPC 84616

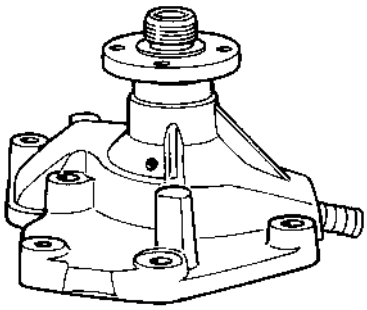

VKPC 84617

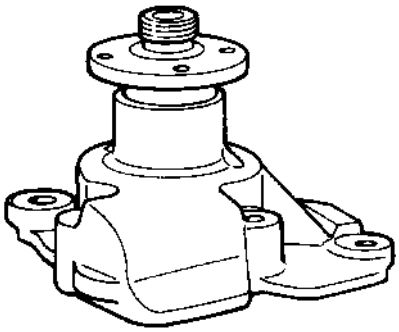

VKPC 84618

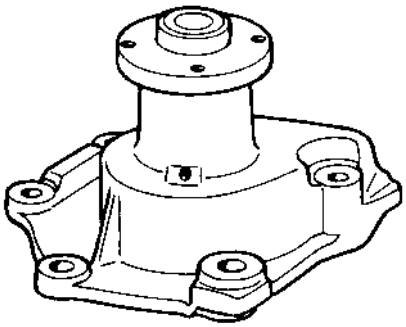

VKPC 84620

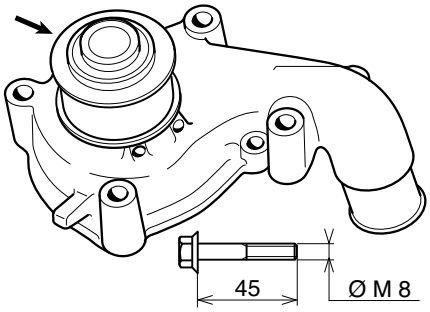

VKPC 85200

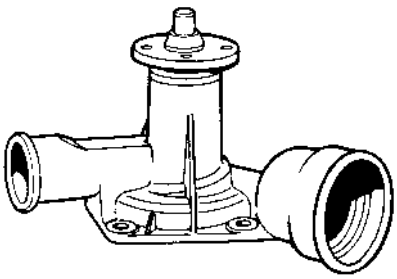

VKPC 85201

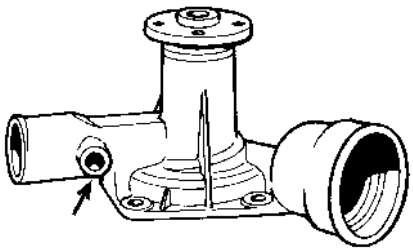

VKPC 85202

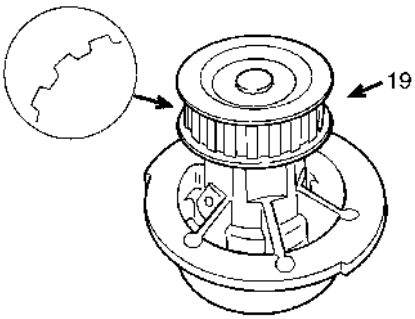

VKPC 85203

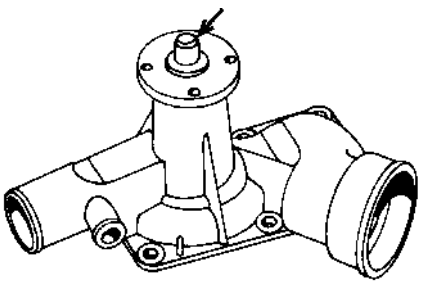

VKPC 85206

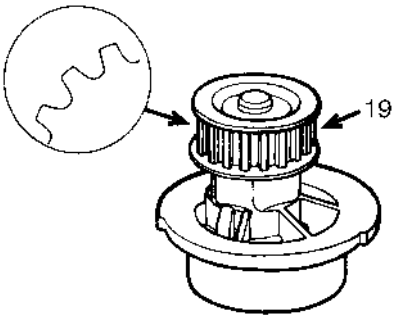

VKPC 85211

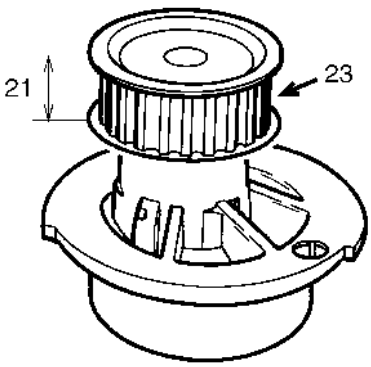

www.bergab.ru Берг АБ bergab@ya.ru Тел. (495)-228-06-21, факс (495) 223-3071

VKPC 85220

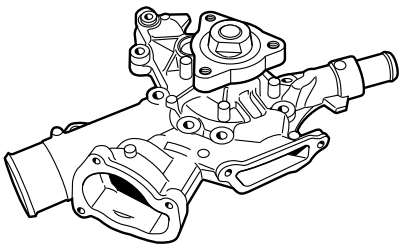

VKPC 85400

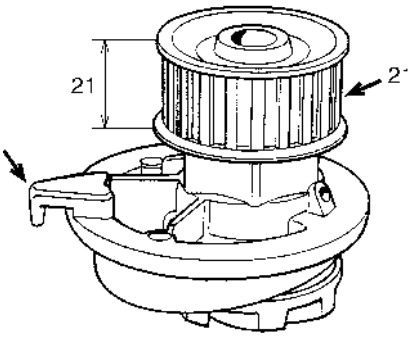

VKPC 85401

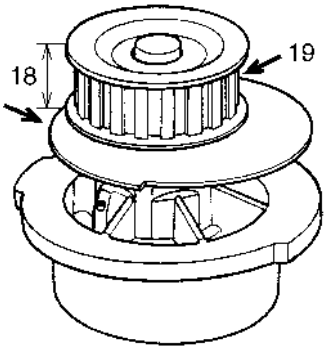

VKPC 85403

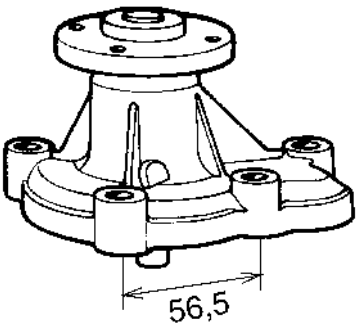

VKPC 85404

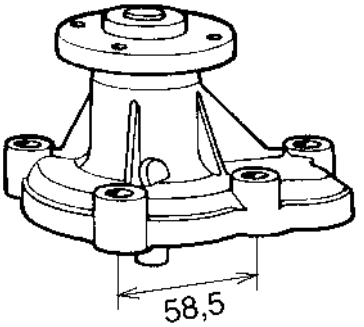

VKPC 85406

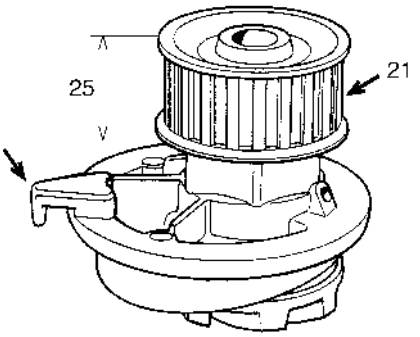

VKPC 85407

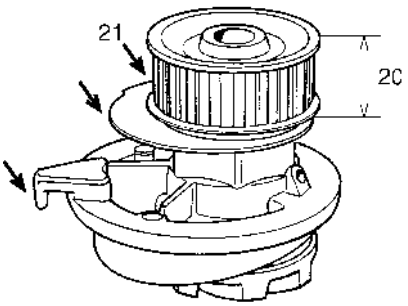

VKPC 85408

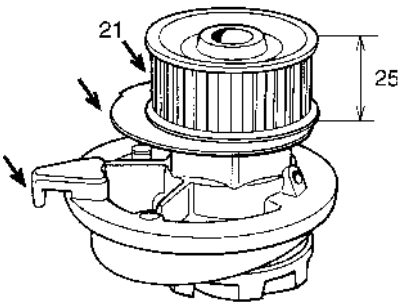

VKPC 85409

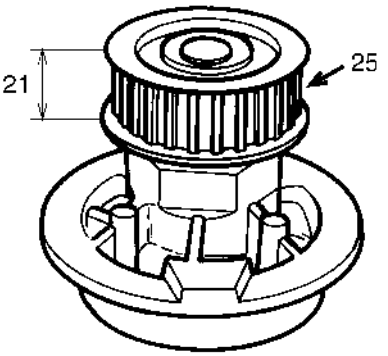

VKPC 85410

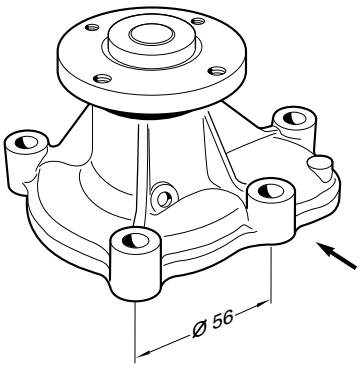

VKPC 85600

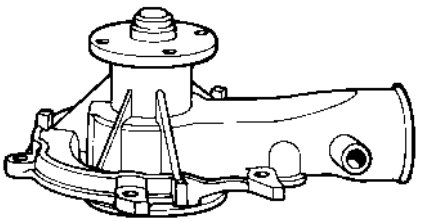

VKPC 85603

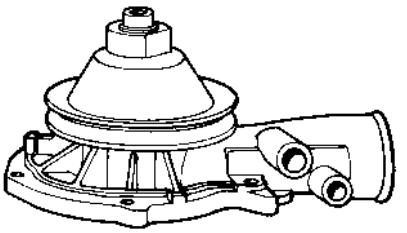

www.bergab.ru Берг АБ bergab@ya.ru Тел. (495)-228-06-21, факс (495) 223-3071

VKPC 85610

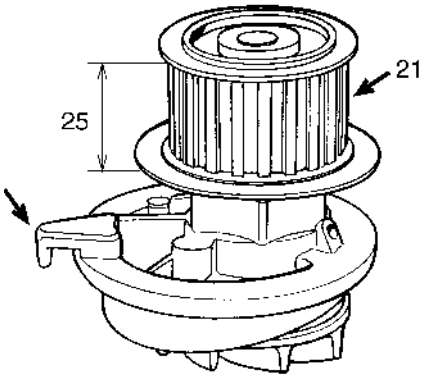

VKPC 85611

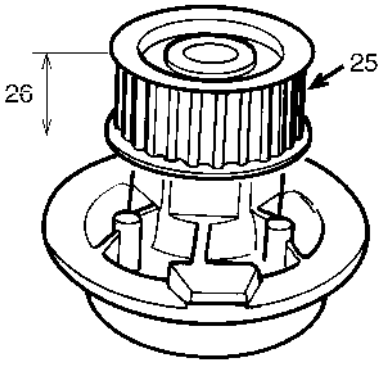

VKPC 85613

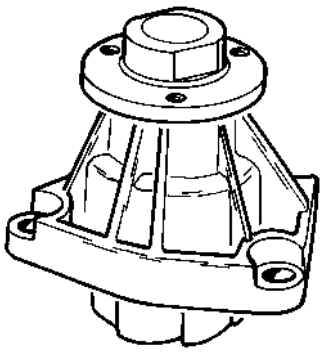

VKPC 85620

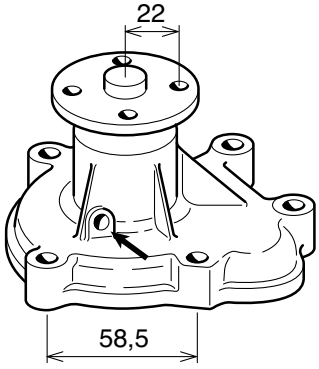

VKPC 85621

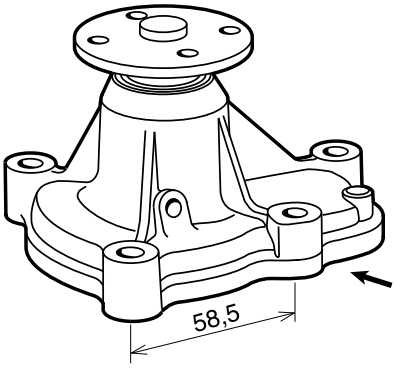

VKPC 85622

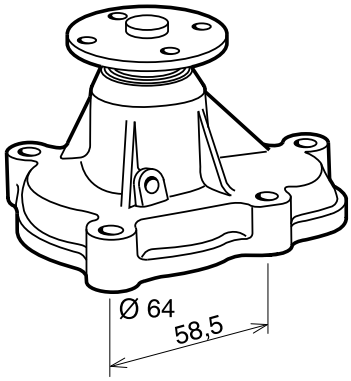

VKPC 85623

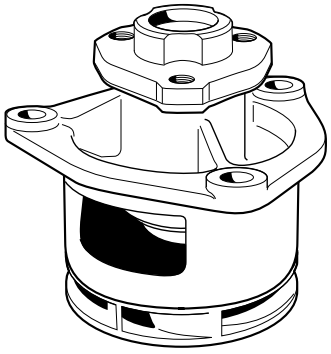

VKPC 85624

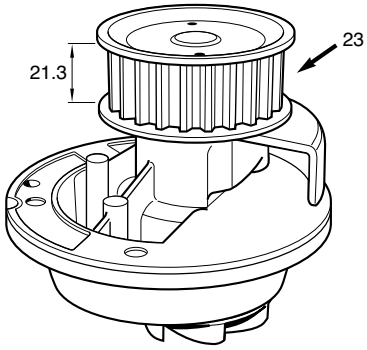

VKPC 86200

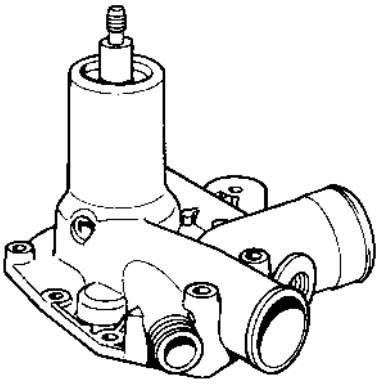

VKPC 86201

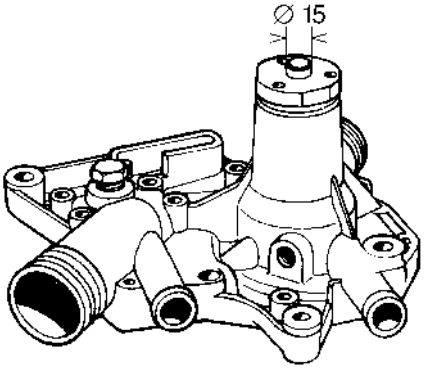

VKPC 86202

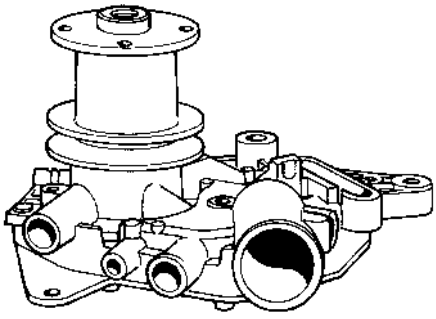

VKPC 86203

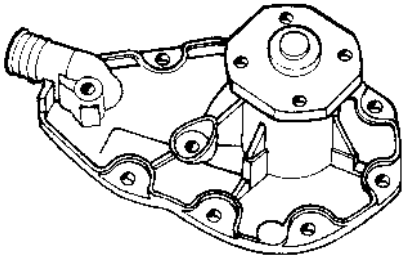

www.bergab.ru Берг АБ bergab@ya.ru Тел. (495)-228-06-21, факс (495) 223-3071

VKPC 86205

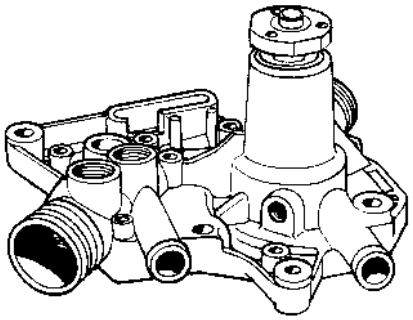

VKPC 86206

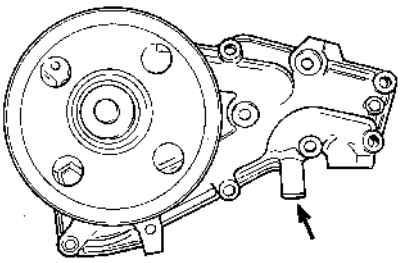

VKPC 86208

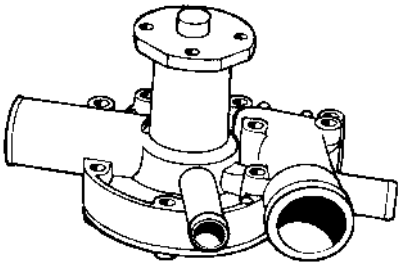

VKPC 86209

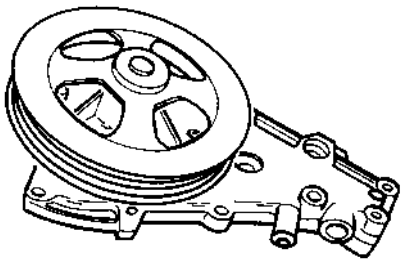

VKPC 86212

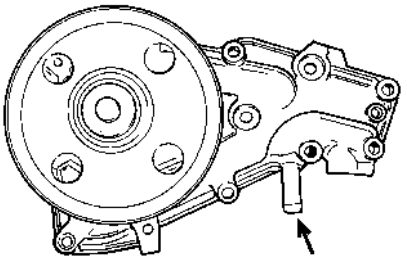

VKPC 86215

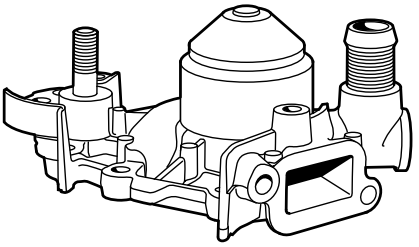

VKPC 86216

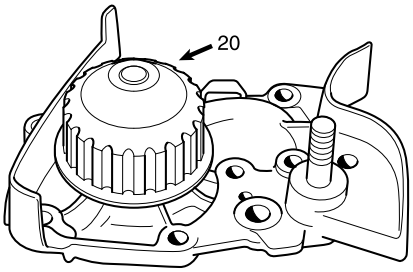

VKPC 86217

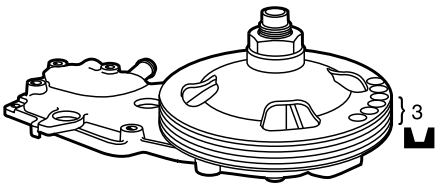

VKPC 86401

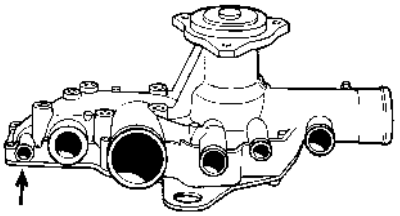

VKPC 86402

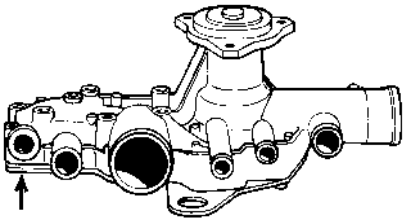

VKPC 86403

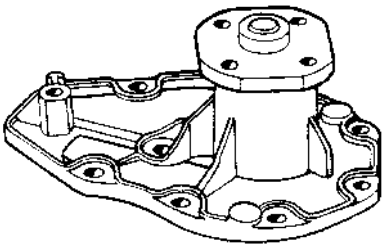

VKPC 86405

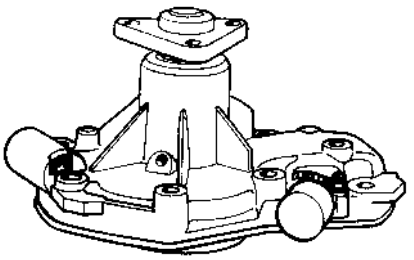

www.bergab.ru Берг АБ bergab@ya.ru Тел. (495)-228-06-21, факс (495) 223-3071

VKPC 86407

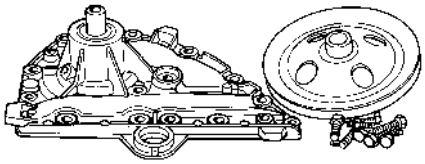

VKPC 86408

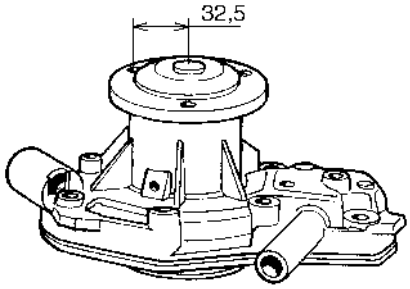

VKPC 86409

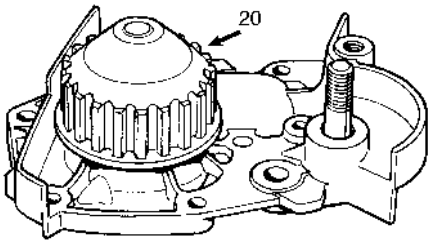

VKPC 86410

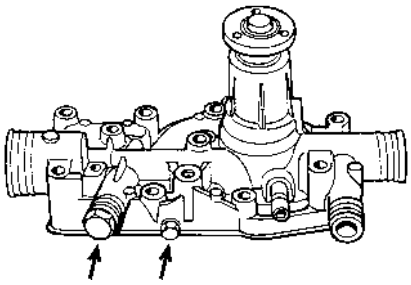

VKPC 86412

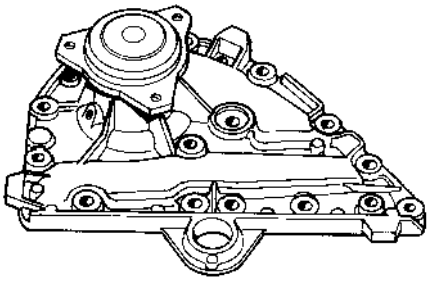

VKPC 86413

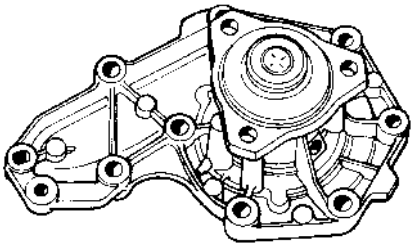

VKPC 86415

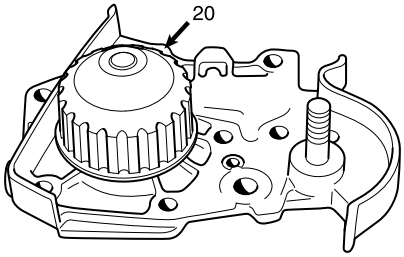

VKPC 86416

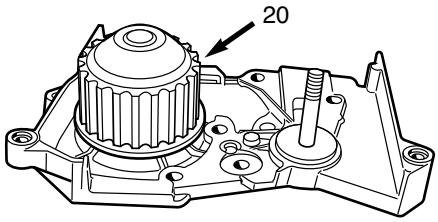

VKPC 86601

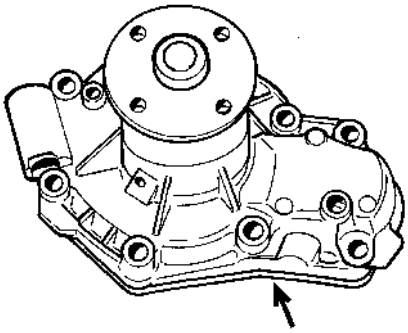

VKPC 86602

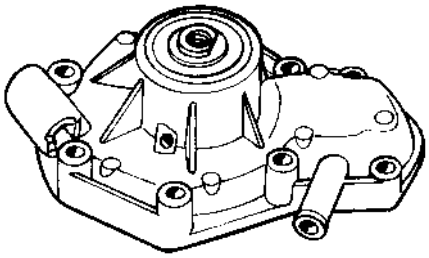

VKPC 86603

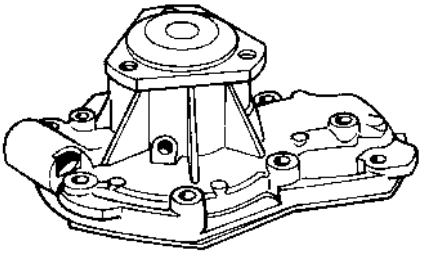

VKPC 86604

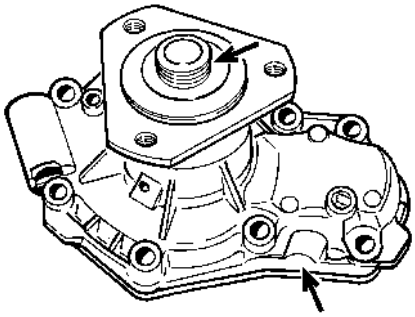

www.bergab.ru Берг АБ bergab@ya.ru Тел. (495)-228-06-21, факс (495) 223-3071

VKPC 86606

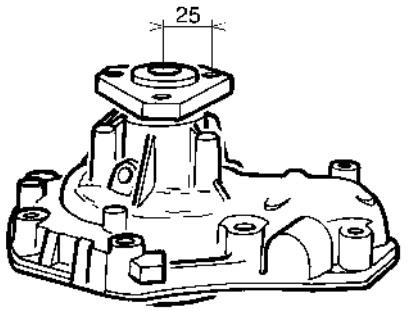

VKPC 86607

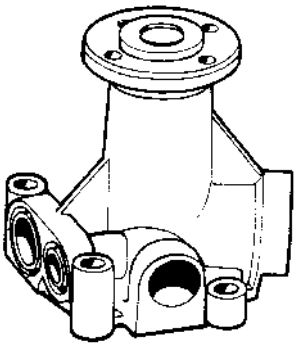

VKPC 86609

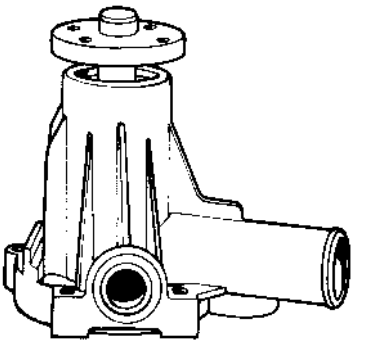

VKPC 86610

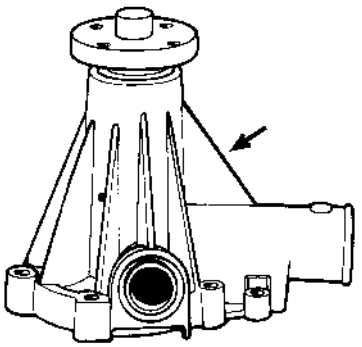

VKPC 86612

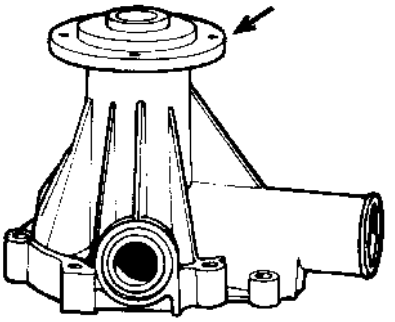

VKPC 86614

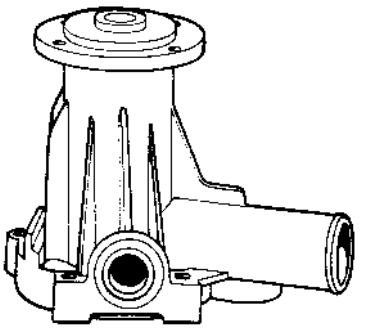

VKPC 86615

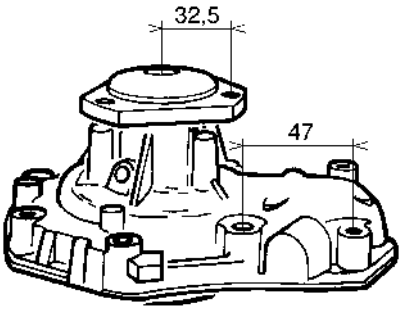

VKPC 86616

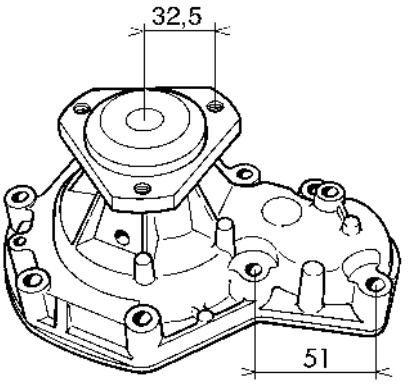

VKPC 86618

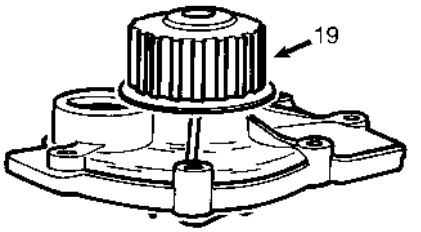

VKPC 86619

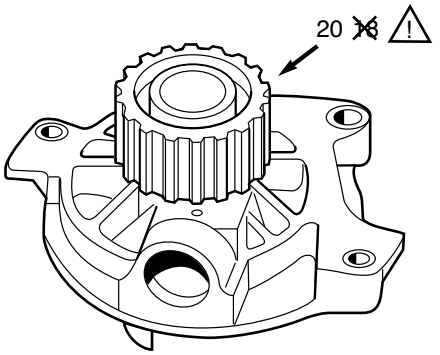

VKPC 86621

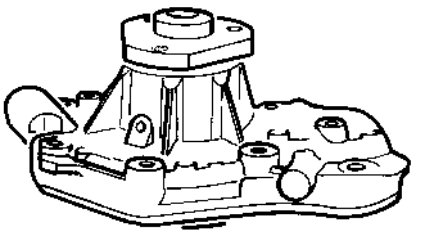

VKPC 86622

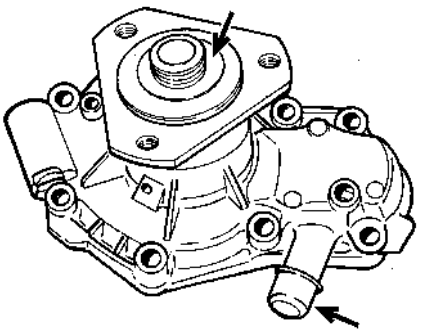

www.bergab.ru Берг АБ bergab@ya.ru Тел. (495)-228-06-21, факс (495) 223-3071

VKPC 86623

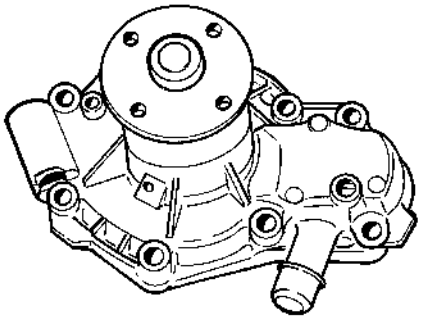

VKPC 86630

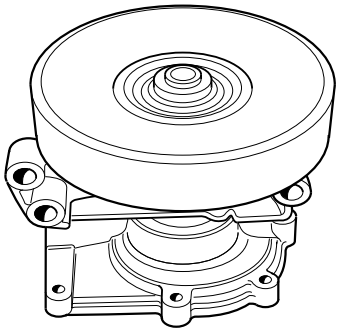

VKPC 86631

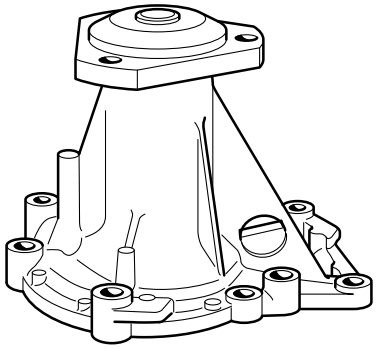

VKPC 86633

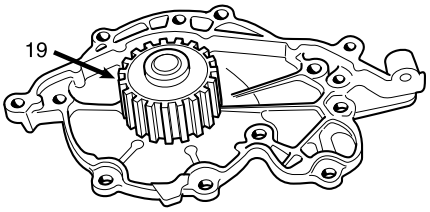

VKPC 87200

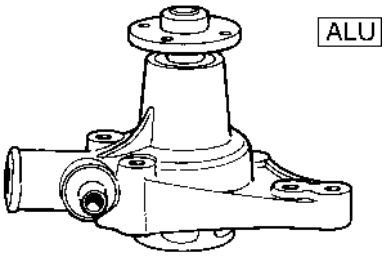

VKPC 87203

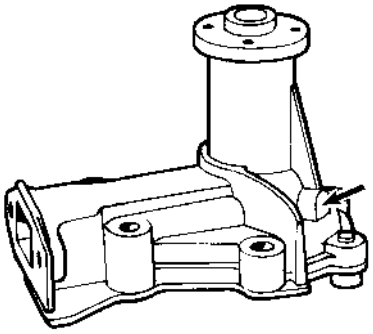

VKPC 87205

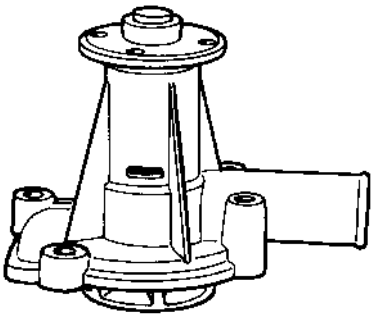

VKPC 87206

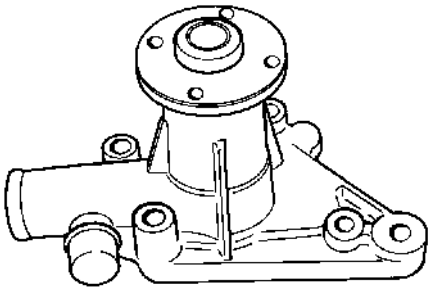

VKPC 87207

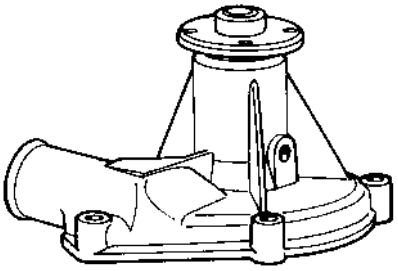

VKPC 87400

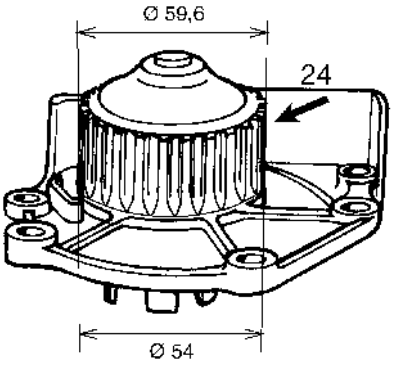

VKPC 87401

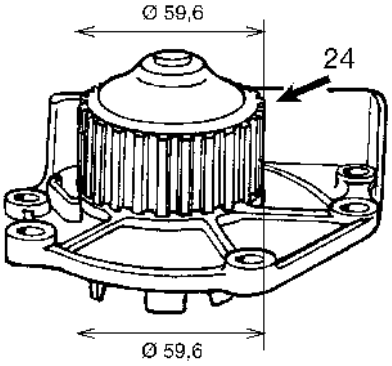

VKPC 87403

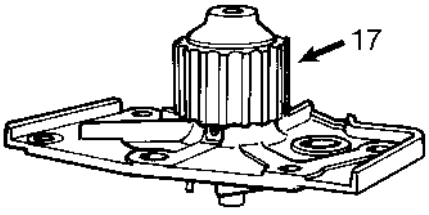

www.bergab.ru Берг АБ bergab@ya.ru Тел. (495)-228-06-21, факс (495) 223-3071

VKPC 87404

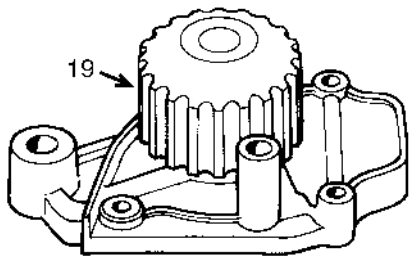

VKPC 87600

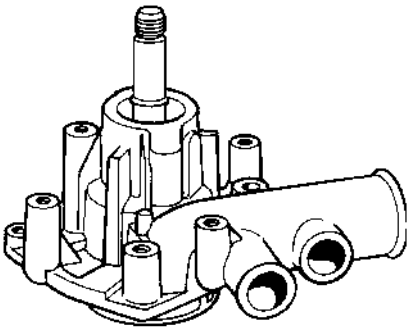

VKPC 87602

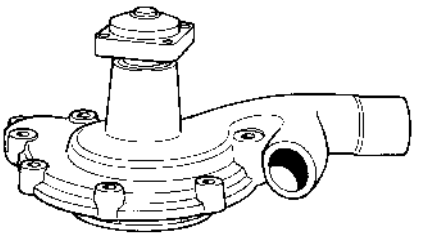

VKPC 87606

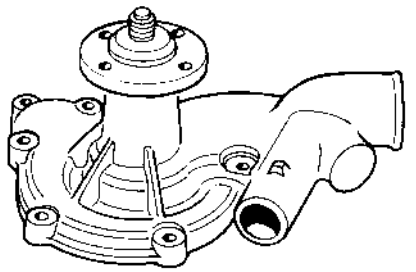

VKPC 87607

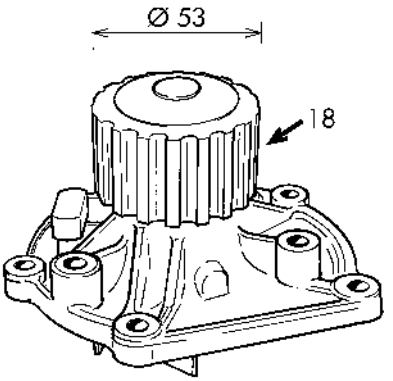

VKPC 87609

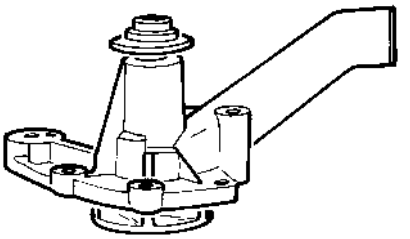

VKPC 87610

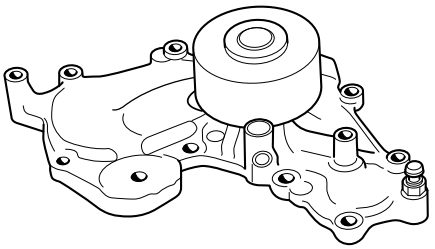

VKPC 87800

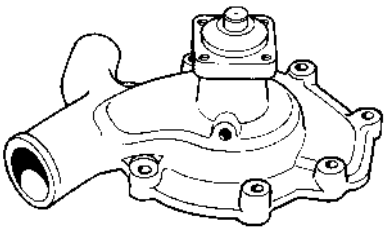

VKPC 87813

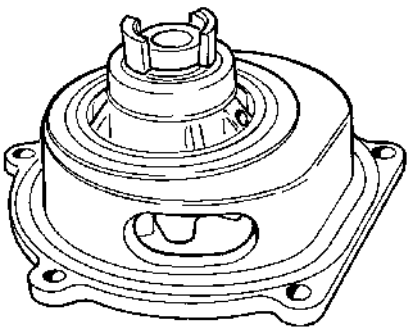

VKPC 87814

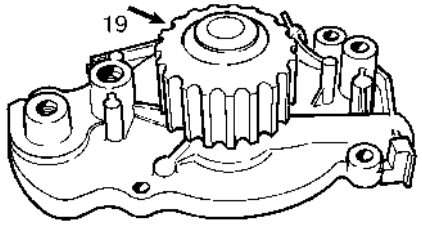

VKPC 87816

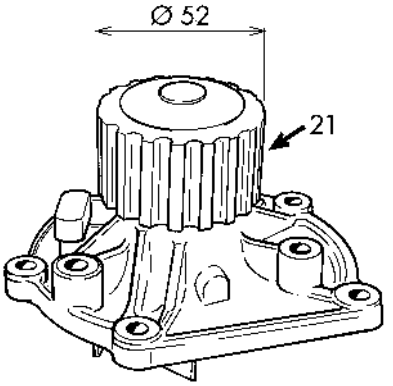

VKPC 87835

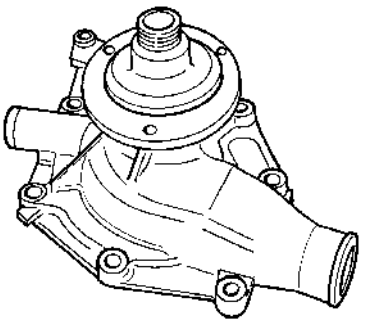

www.bergab.ru Берг АБ bergab@ya.ru Тел. (495)-228-06-21, факс (495) 223-3071

VKPC 88200

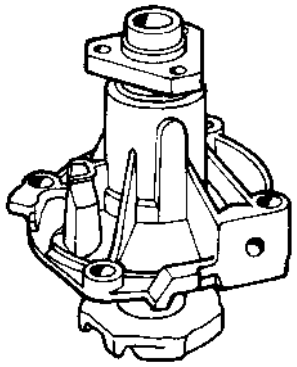

VKPC 88203

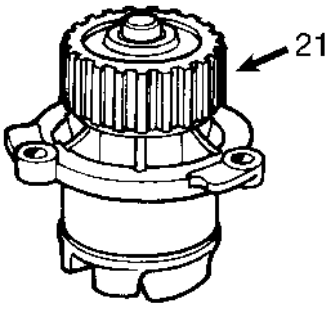

VKPC 88204

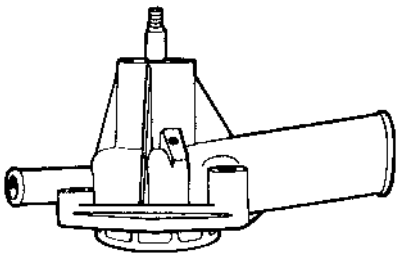

VKPC 88206

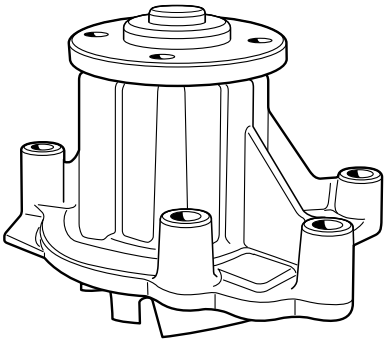

VKPC 88600

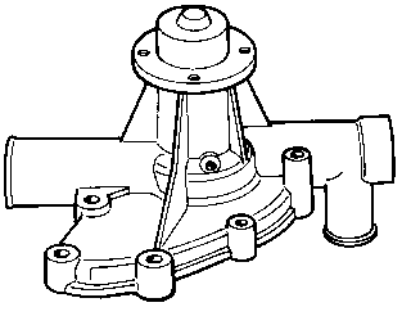

VKPC 88603

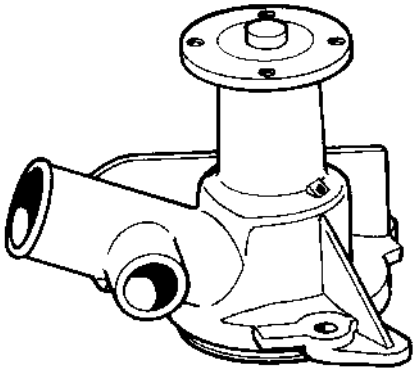

VKPC 88604

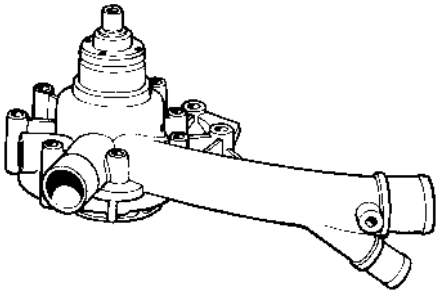

VKPC 88605

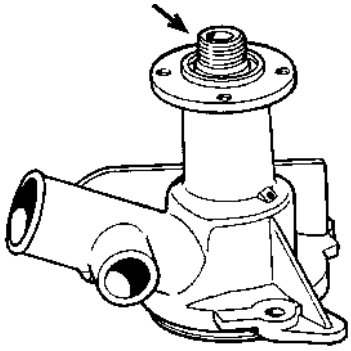

VKPC 88607

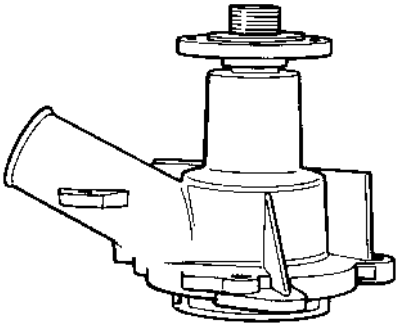

VKPC 88608

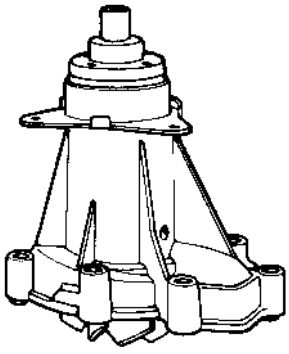

VKPC 88609

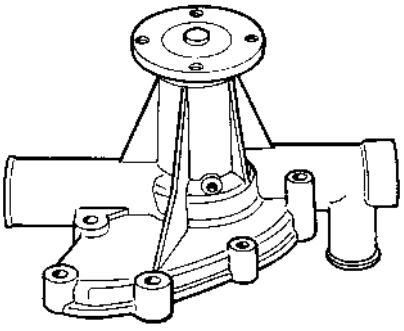

VKPC 88610

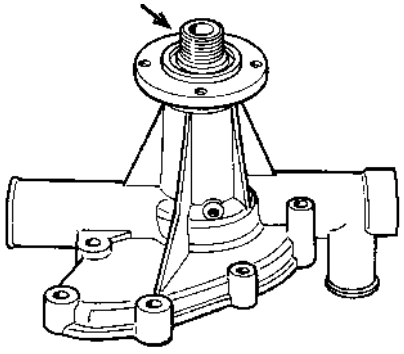

www.bergab.ru Берг АБ bergab@ya.ru Тел. (495)-228-06-21, факс (495) 223-3071

VKPC 88611

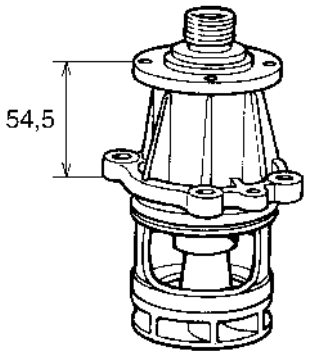

VKPC 88612

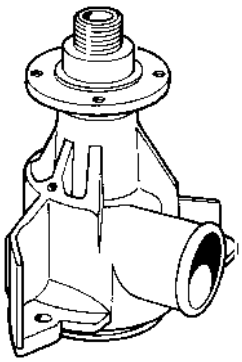

VKPC 88613

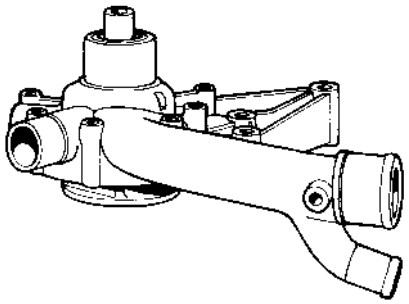

VKPC 88614

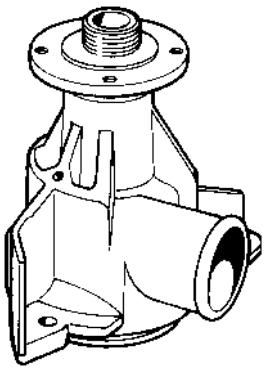

VKPC 88615

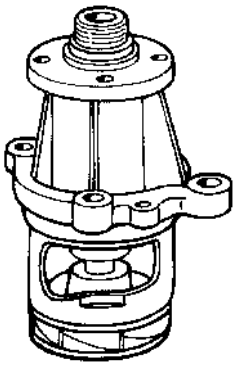

VKPC 88616

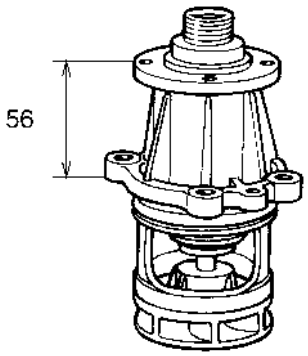

VKPC 88617

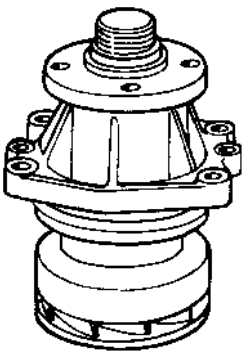

VKPC 88619

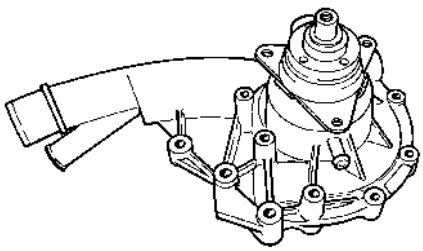

VKPC 88620

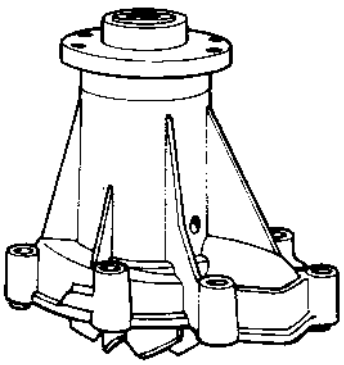

VKPC 88622

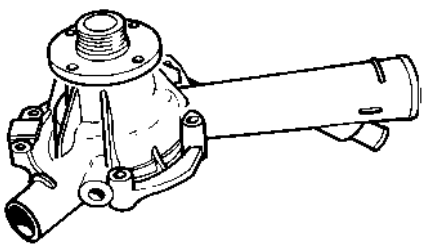

VKPC 88625

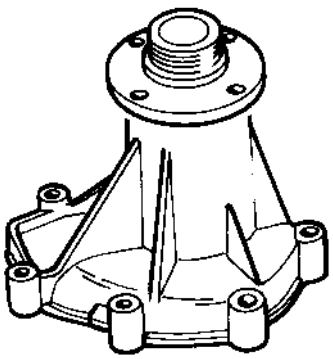

VKPC 88631

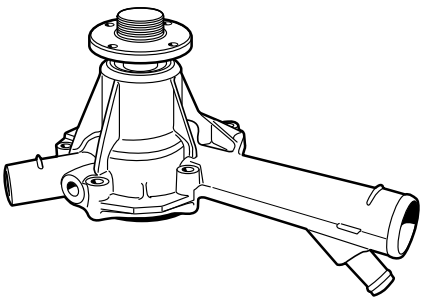

www.bergab.ru Берг АБ bergab@ya.ru Тел. (495)-228-06-21, факс (495) 223-3071

VKPC 88632

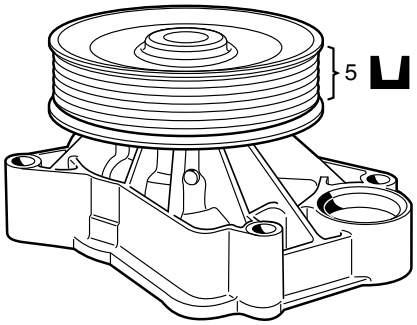

VKPC 88802

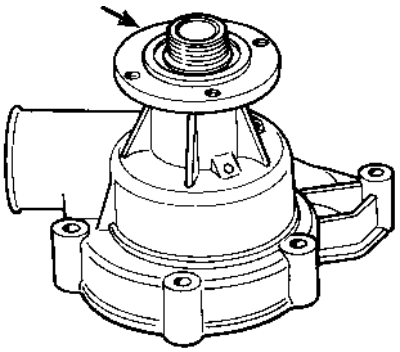

VKPC 88803

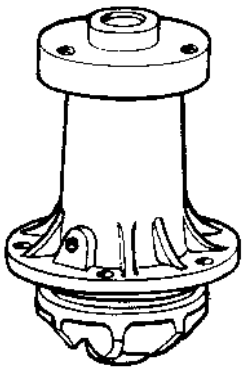

VKPC 88804

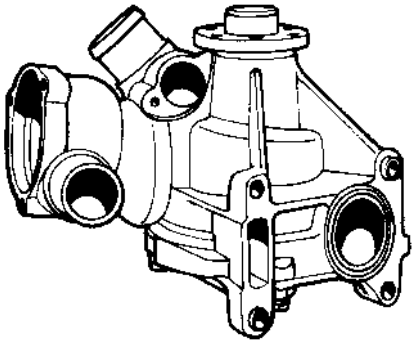

VKPC 88807

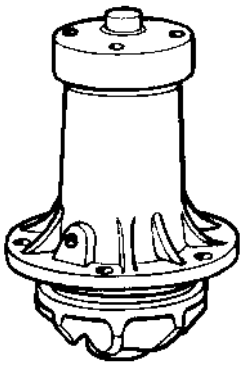

VKPC 88808

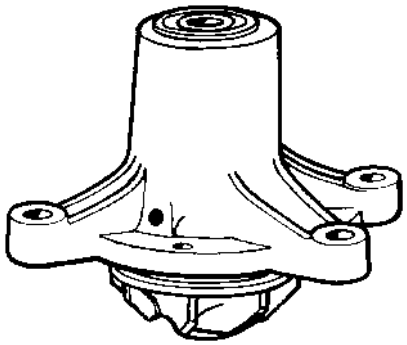

VKPC 88809

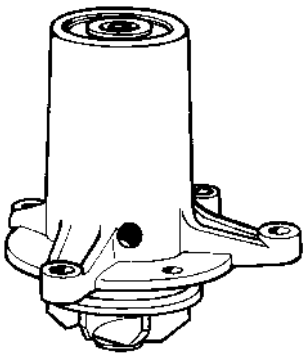

VKPC 88810

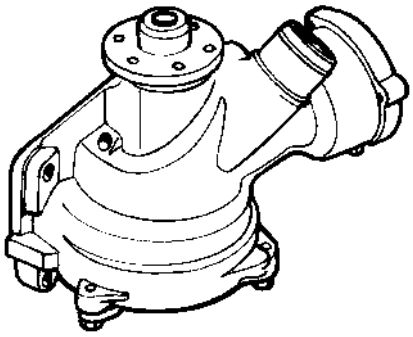

VKPC 88812

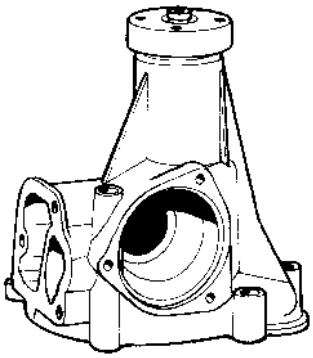

VKPC 88813

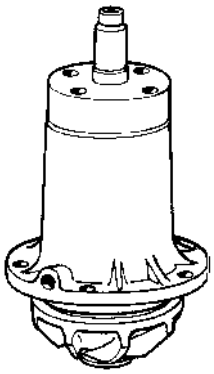

VKPC 88816

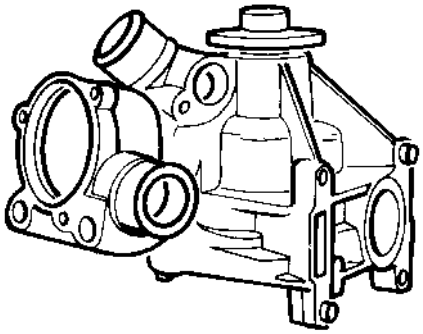

VKPC 88817

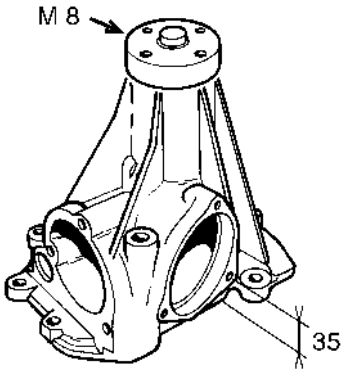

www.bergab.ru Берг АБ bergab@ya.ru Тел. (495)-228-06-21, факс (495) 223-3071

VKPC 88818

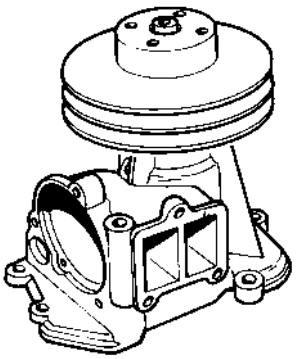

VKPC 88820

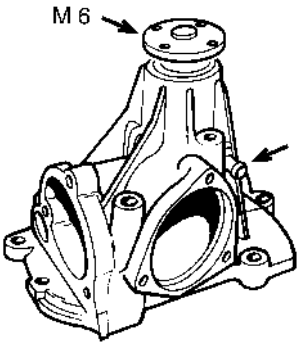

VKPC 88821

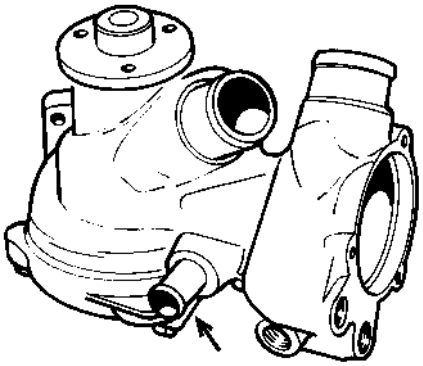

VKPC 88824

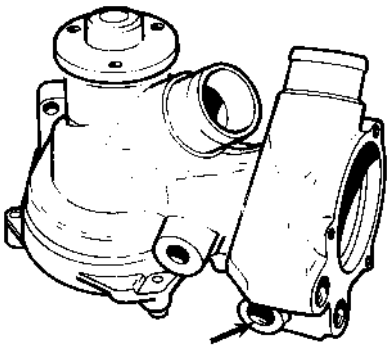

VKPC 88825

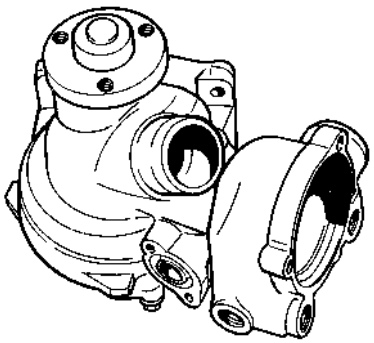

VKPC 88826

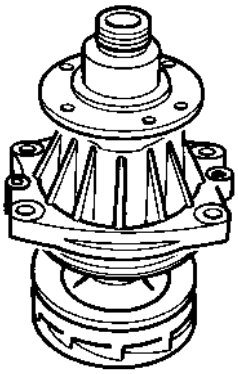

VKPC 88827

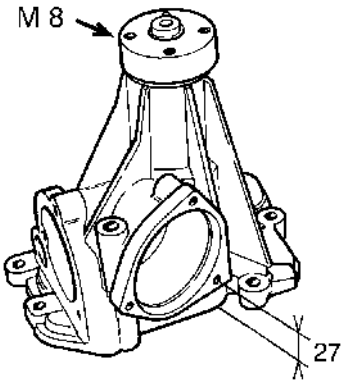

VKPC 88828

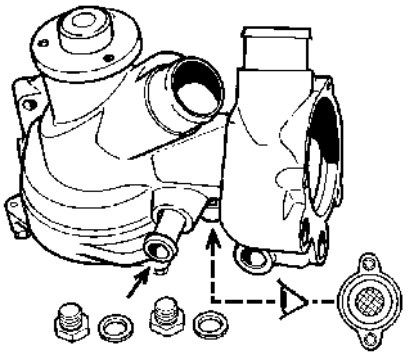

VKPC 88829

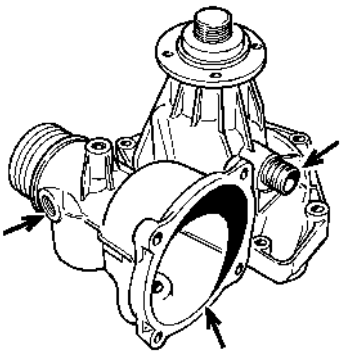

VKPC 88830

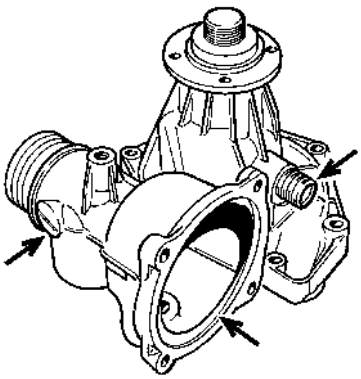

VKPC 88831

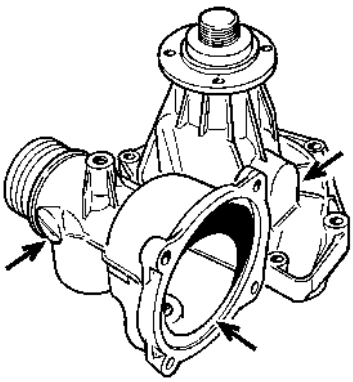

VKPC 88835

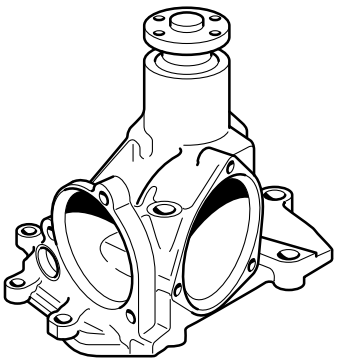

www.bergab.ru Берг АБ bergab@ya.ru Тел. (495)-228-06-21, факс (495) 223-3071

VKPC 88836

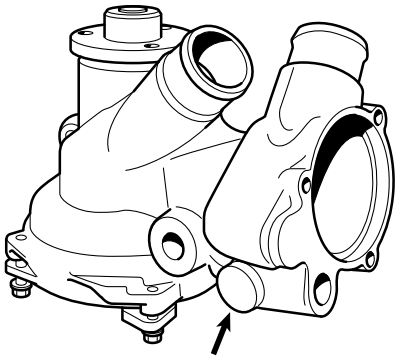

VKPC 88842

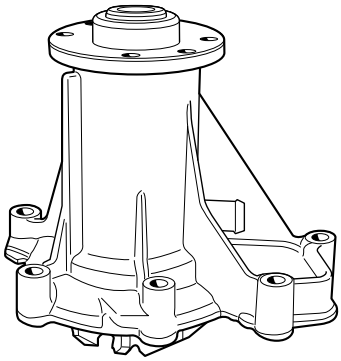

VKPC 88843

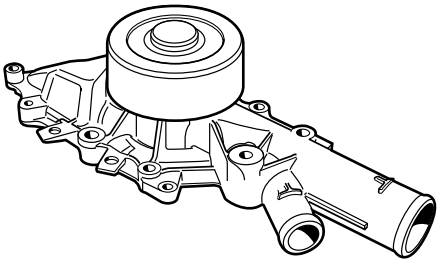

VKPC 88844

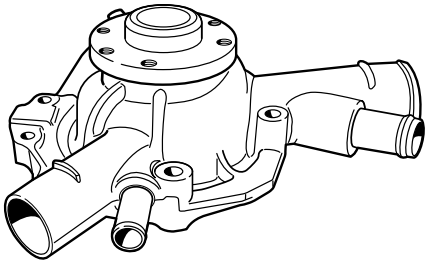

VKPC 88845

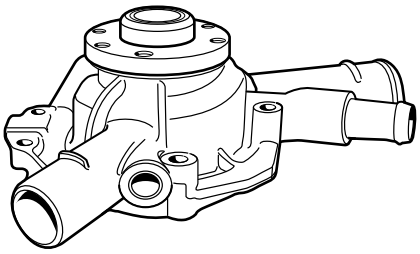

VKPC 88846

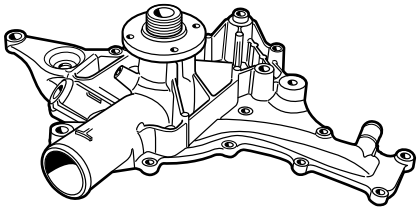

VKPC 88847

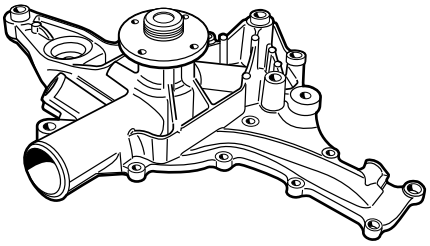

VKPC 88848

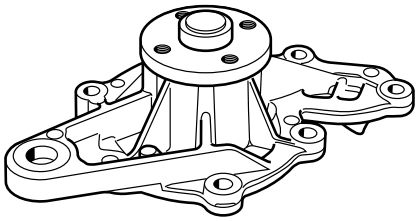

VKPC 90200

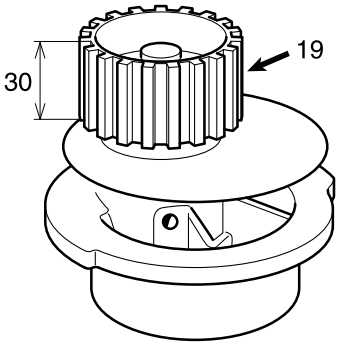

VKPC 90202

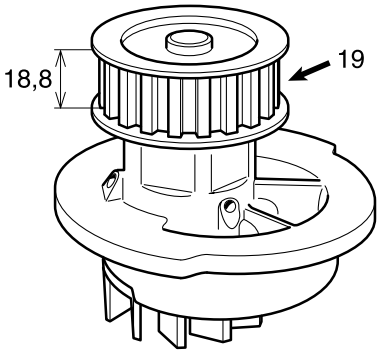

VKPC 90402

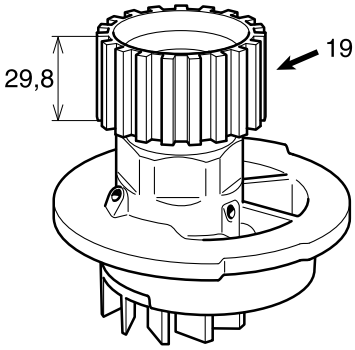

VKPC 91201

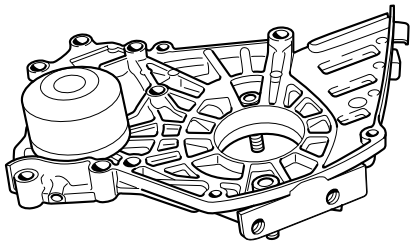

www.bergab.ru Берг АБ bergab@ya.ru Тел. (495)-228-06-21, факс (495) 223-3071

VKPC 91402

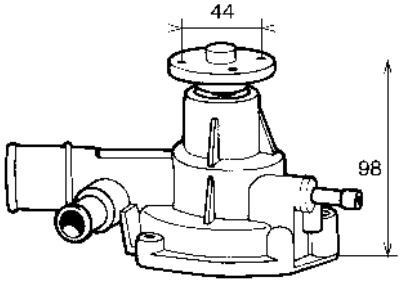

VKPC 91403

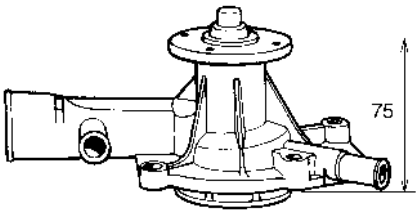

VKPC 91404

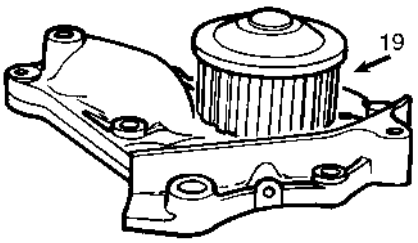

VKPC 91405

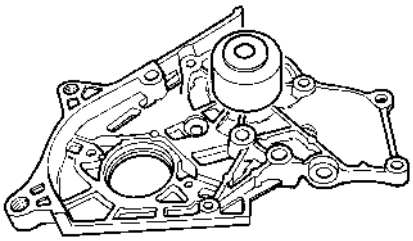

VKPC 91407

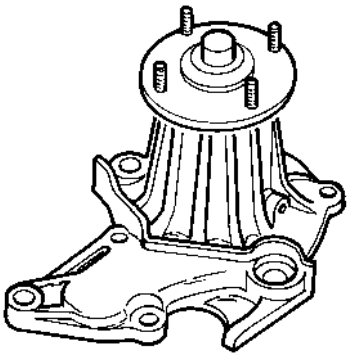

VKPC 91409

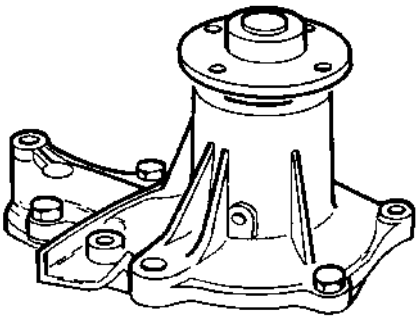

VKPC 91410

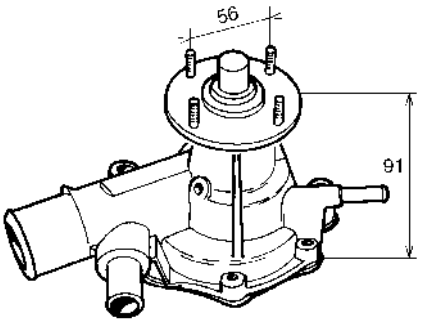

VKPC 91412

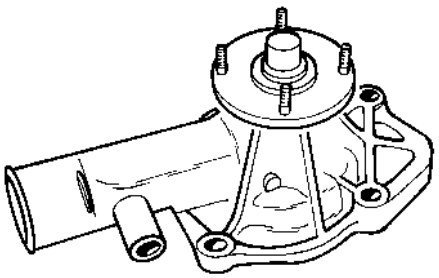

VKPC 91414

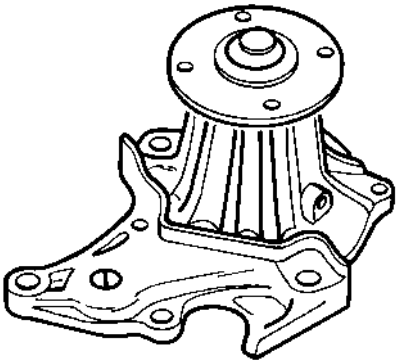

VKPC 91415

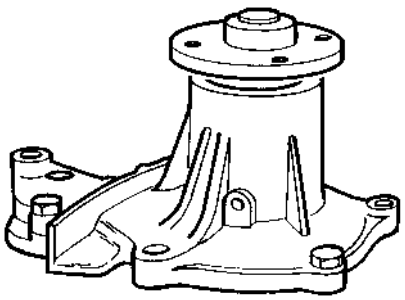

VKPC 91416

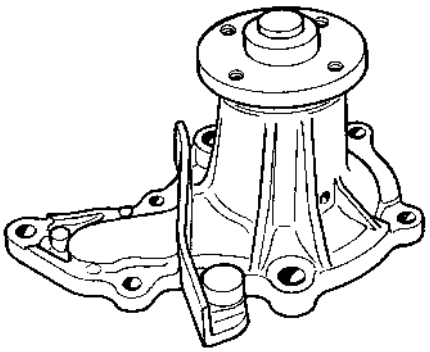

VKPC 91417

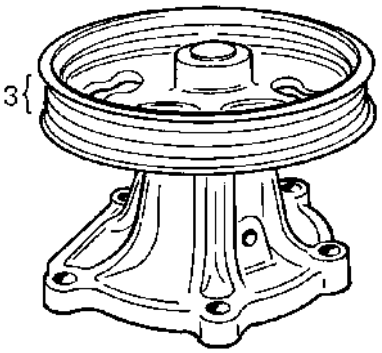

VKPC 91419

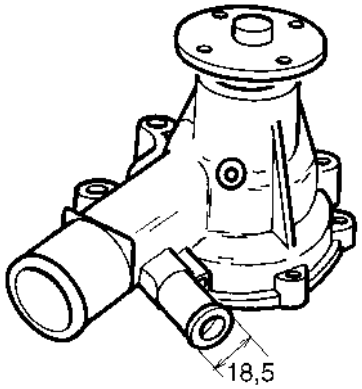

VKPC 91424

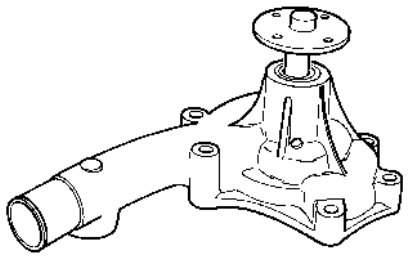

VKPC 91427

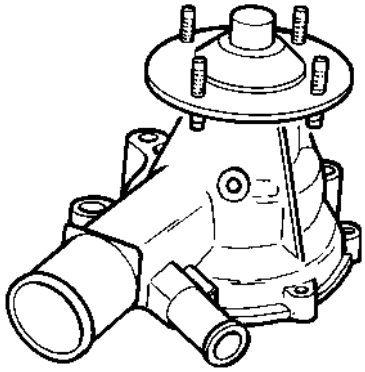

VKPC 91428

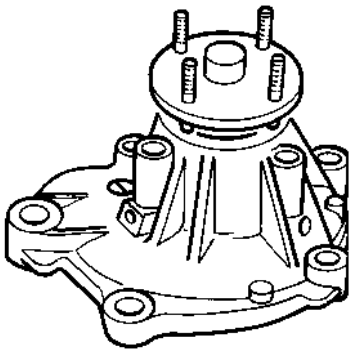

VKPC 91431

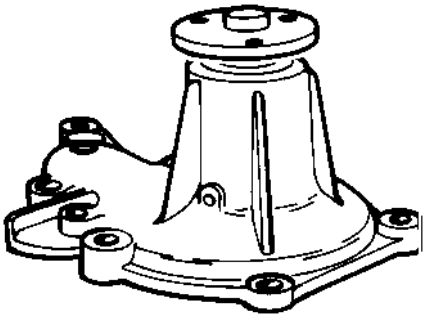

VKPC 91442

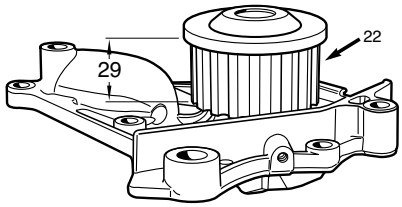

VKPC 91604

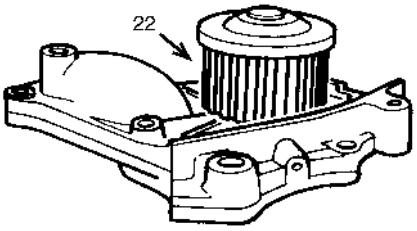

VKPC 91606

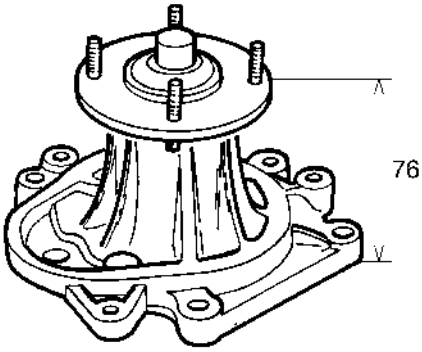

VKPC 91607

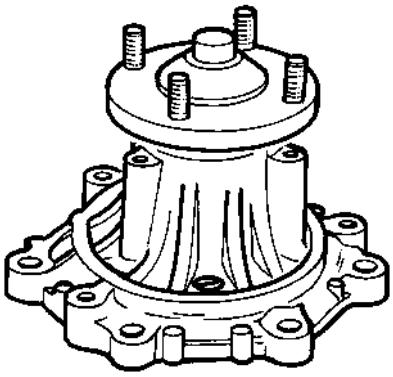

VKPC 91613

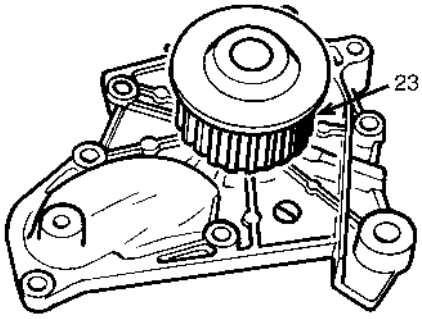

VKPC 91616

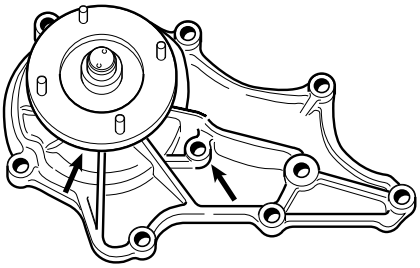

VKPC 91617

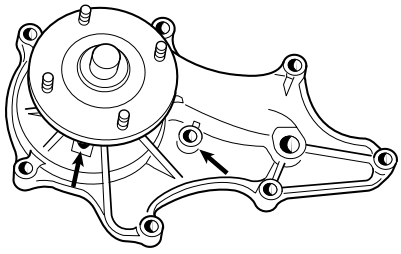

VKPC 91804

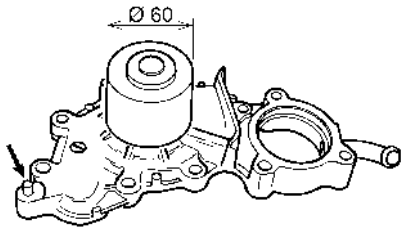

VKPC 92201

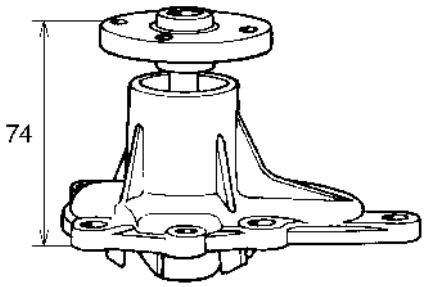

VKPC 92203

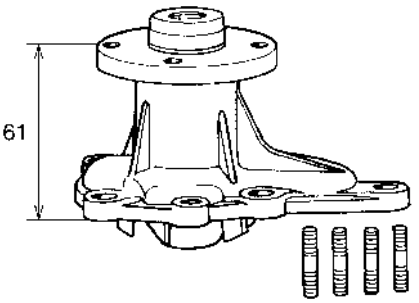

VKPC 92204

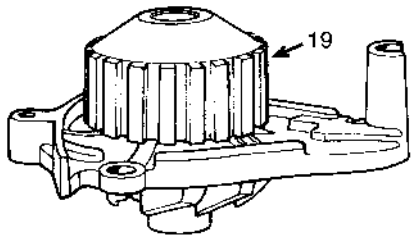

VKPC 92205

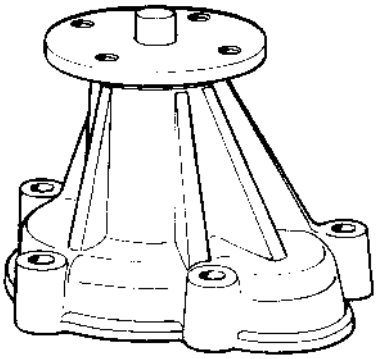

VKPC 92207

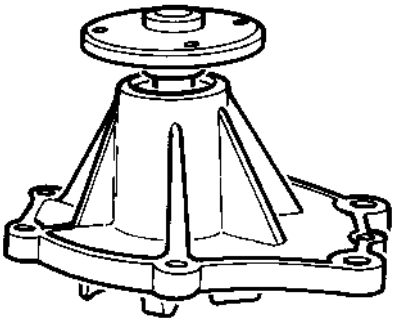

VKPC 92208

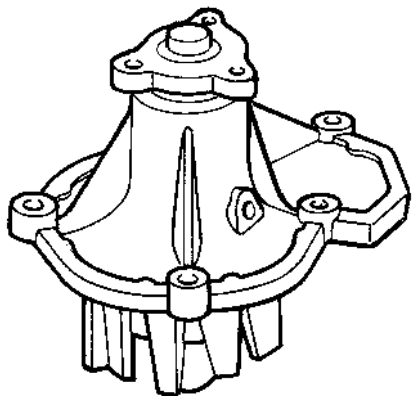

VKPC 92209

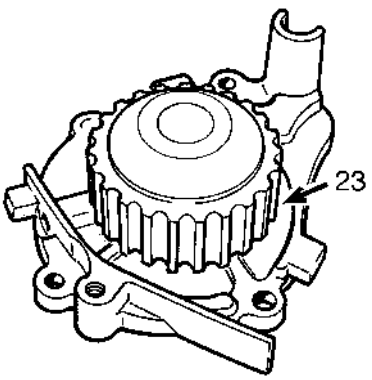

VKPC 92401

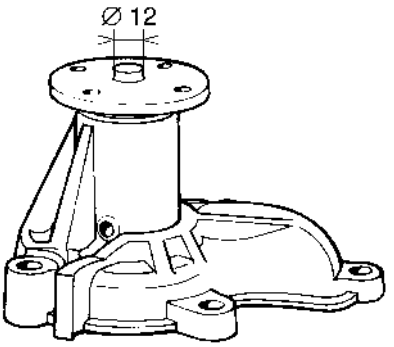

VKPC 92404

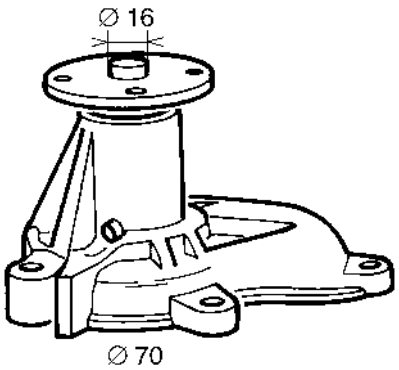

VKPC 92405

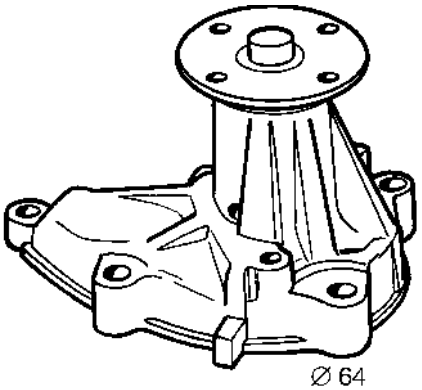

VKPC 92406

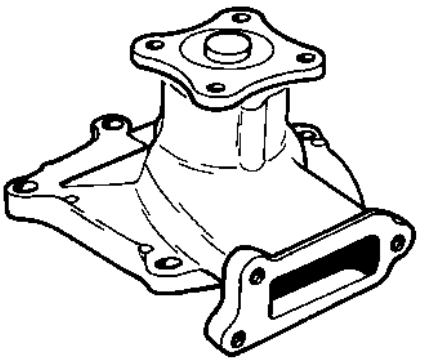

VKPC 92408

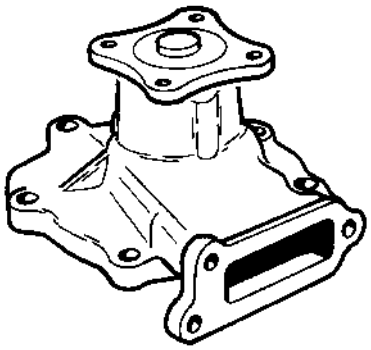

VKPC 92412

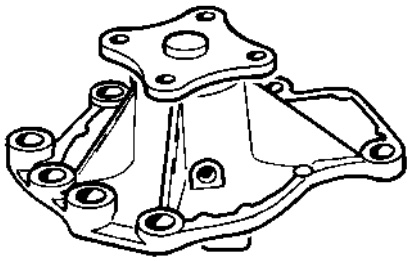

VKPC 92420

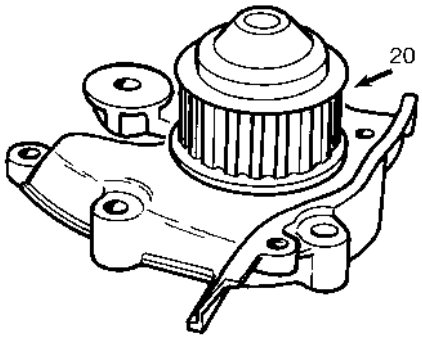

VKPC 92422

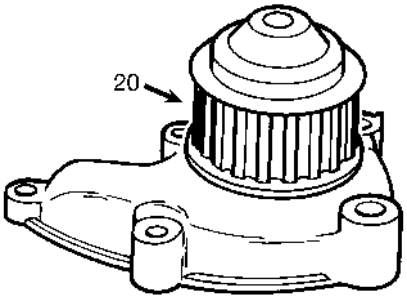

VKPC 92600

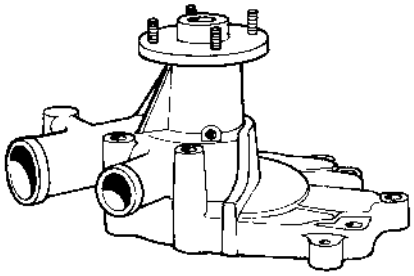

VKPC 92601

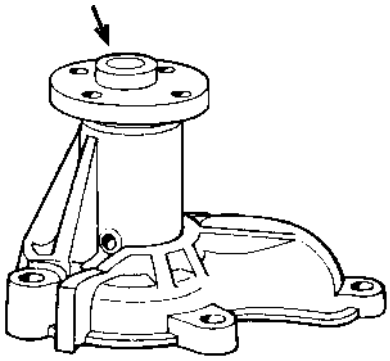

VKPC 92610

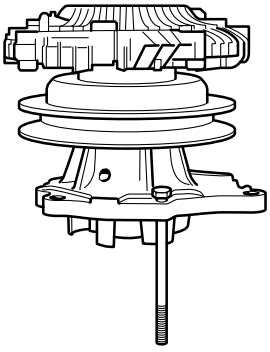

VKPC 92615

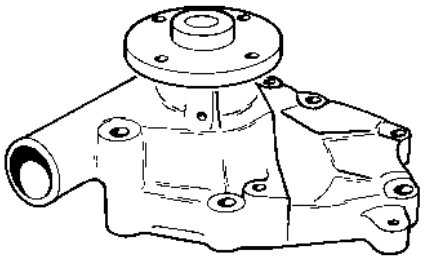

VKPC 92630

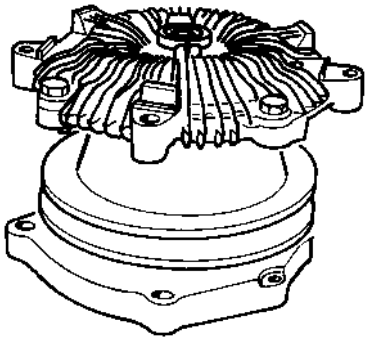

VKPC 92634

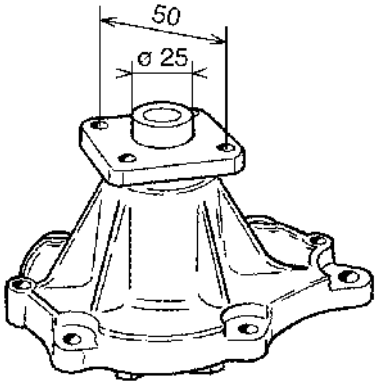

VKPC 92645

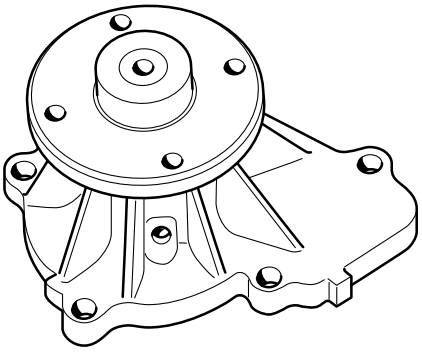

VKPC 92648

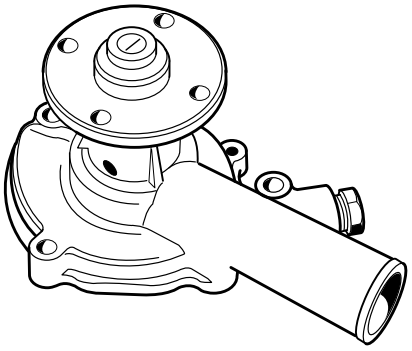

www.bergab.ru Берг АБ bergab@ya.ru Тел. (495)-228-06-21, факс (495) 223-3071

VKPC 92649

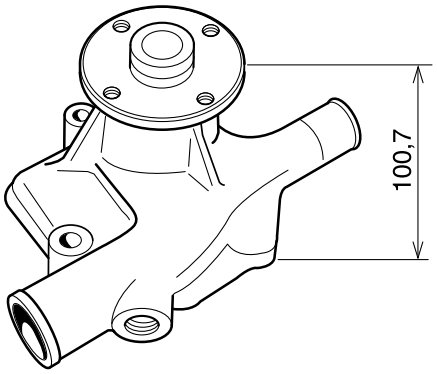

VKPC 92650

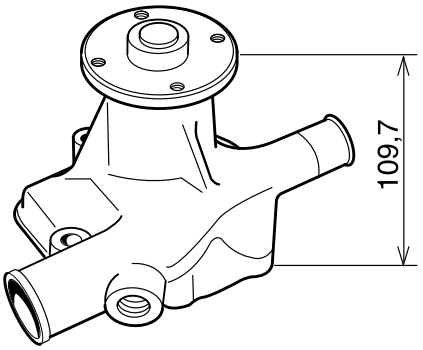

VKPC 92651

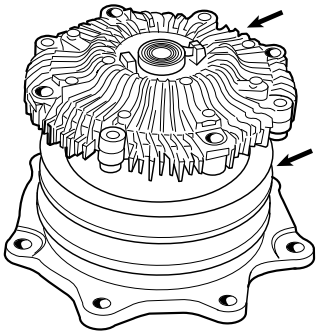

VKPC 92800

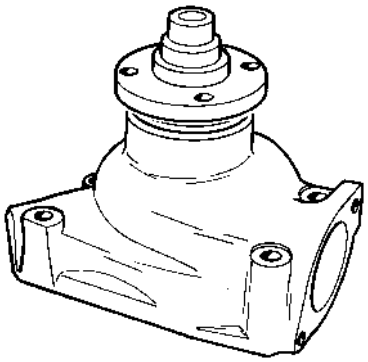

VKPC 92802

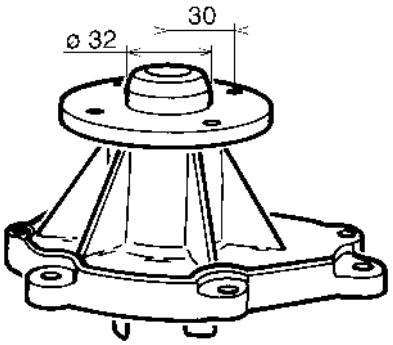

VKPC 92810

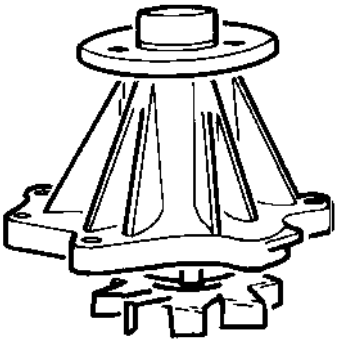

VKPC 92820

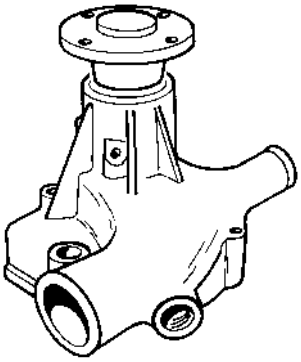

VKPC 92821

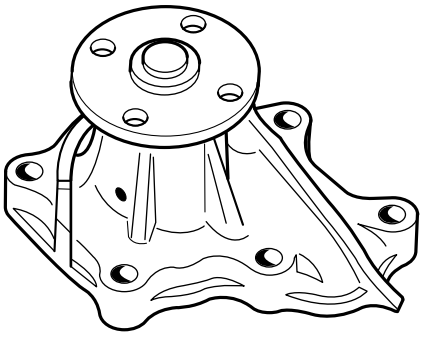

VKPC 92822

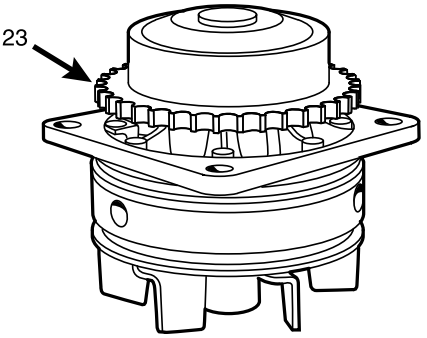

VKPC 92823

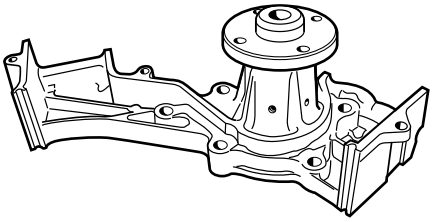

VKPC 92827

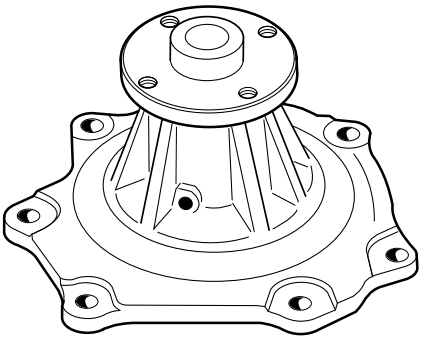

VKPC 92926

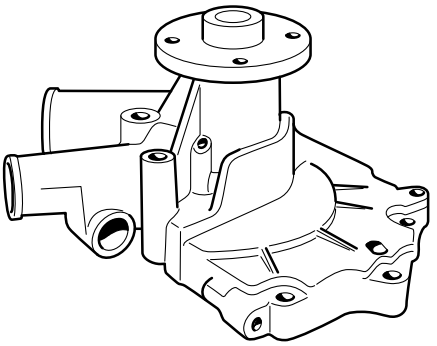

www.bergab.ru Берг АБ bergab@ya.ru Тел. (495)-228-06-21, факс (495) 223-3071

VKPC 93205

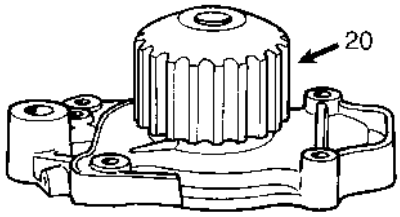

VKPC 93207

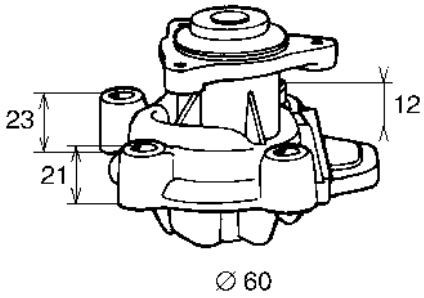

VKPC 93210

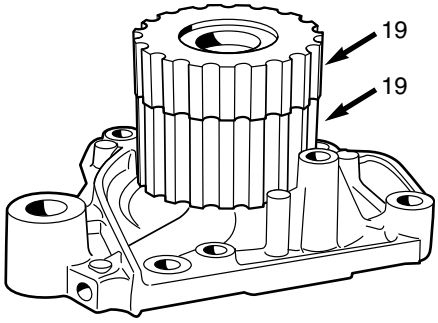

VKPC 93405

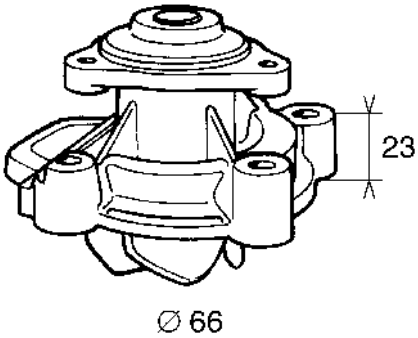

VKPC 93409

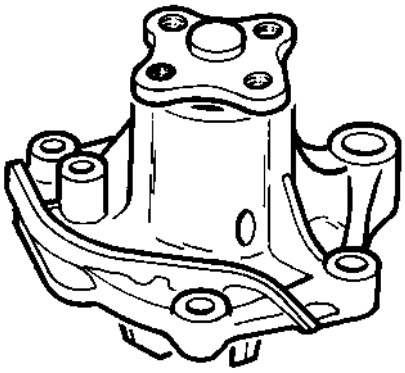

VKPC 93410

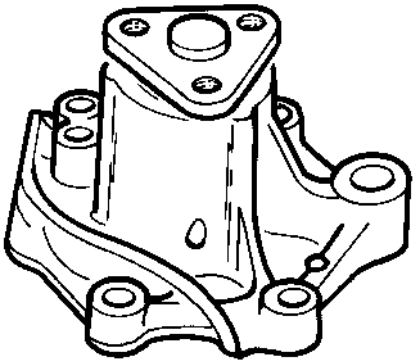

VKPC 93411

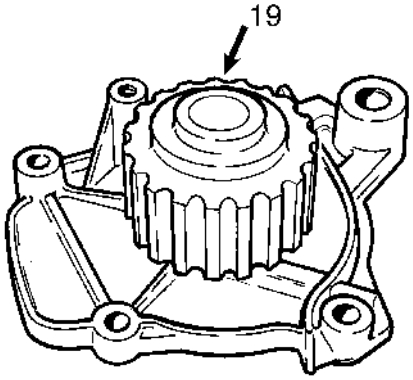

VKPC 93413

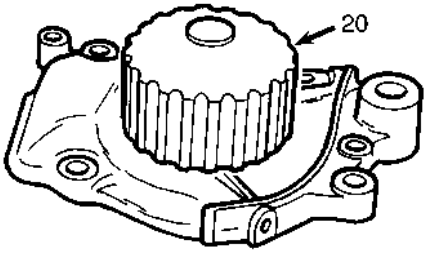

VKPC 93415

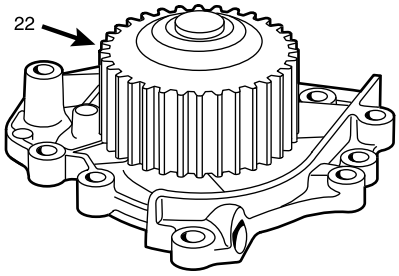

VKPC 93600

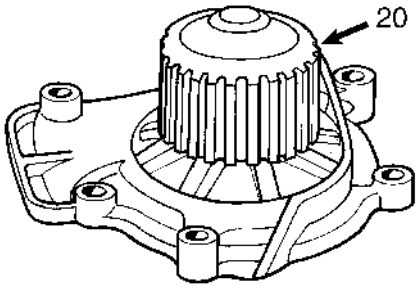

VKPC 93601

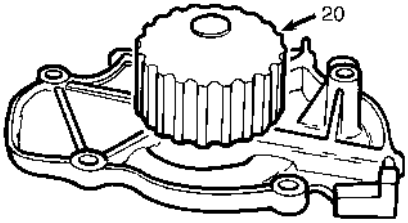

VKPC 93602

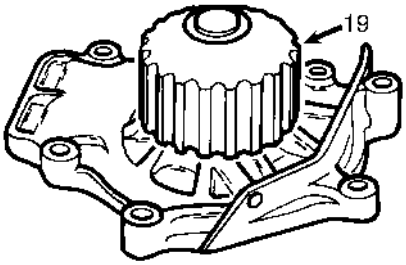

www.bergab.ru Берг АБ bergab@ya.ru Тел. (495)-228-06-21, факс (495) 223-3071

VKPC 94002

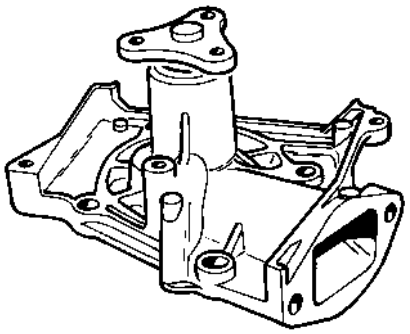

VKPC 94202

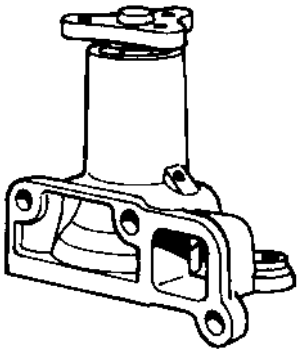

VKPC 94422

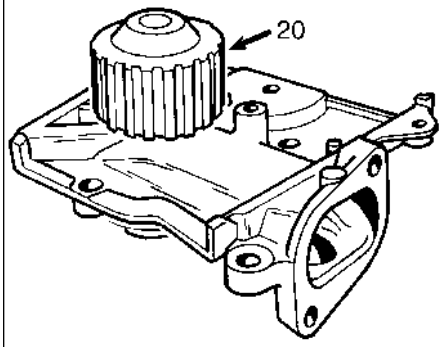

VKPC 94423

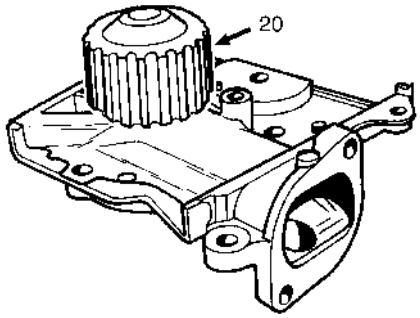

VKPC 94424

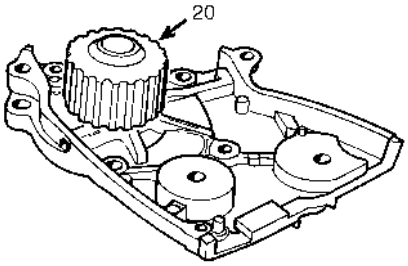

VKPC 94425

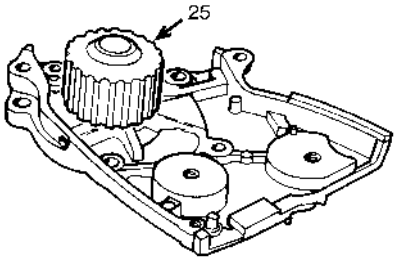

VKPC 94434

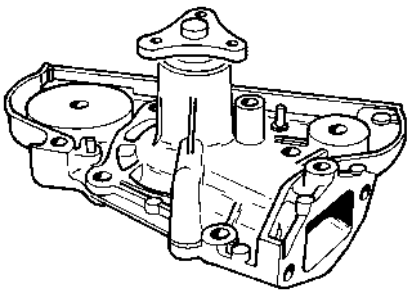

VKPC 94452

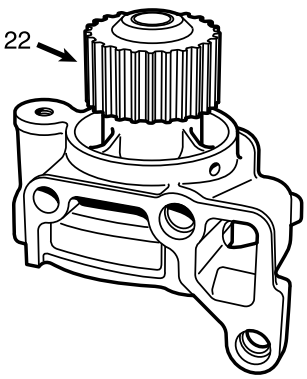

VKPC 94602

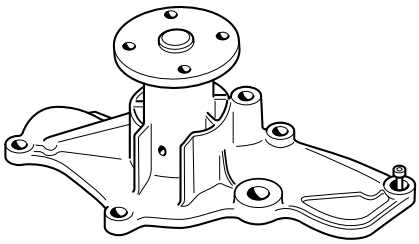

VKPC 94603

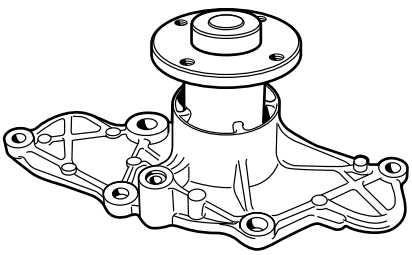

VKPC 94612

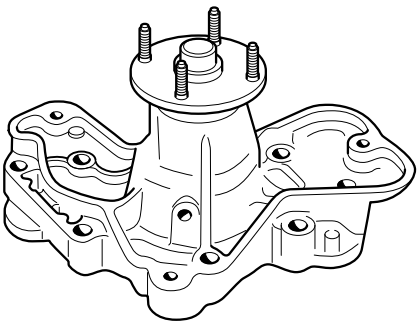

VKPC 95002

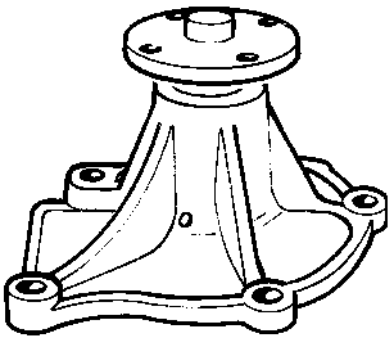

www.bergab.ru Берг АБ bergab@ya.ru Тел. (495)-228-06-21, факс (495) 223-3071

VKPC 95004

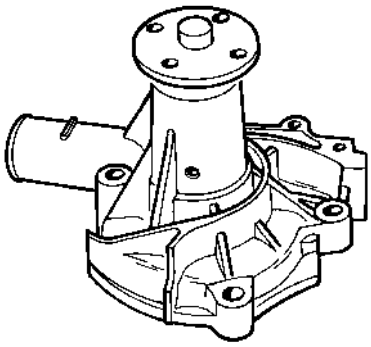

VKPC 95008

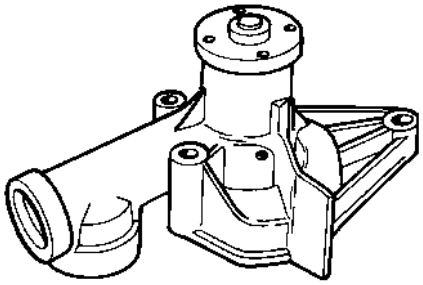

VKPC 95010

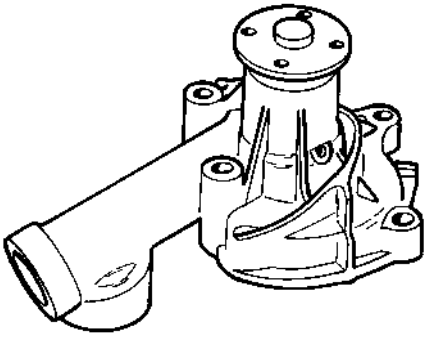

VKPC 95402

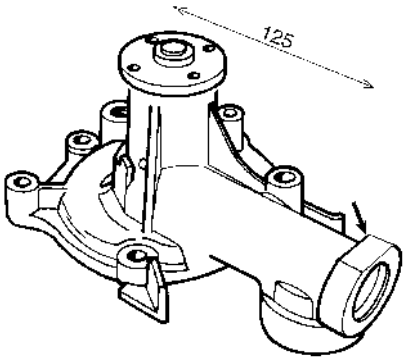

VKPC 95404

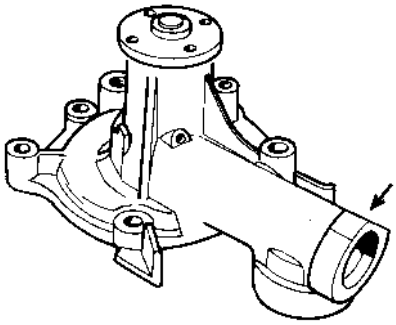

VKPC 95405

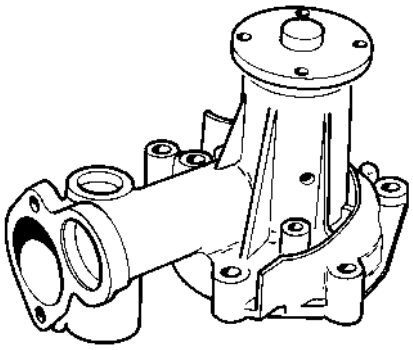

VKPC 95420

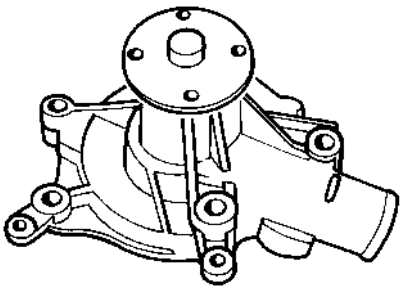

VKPC 95422

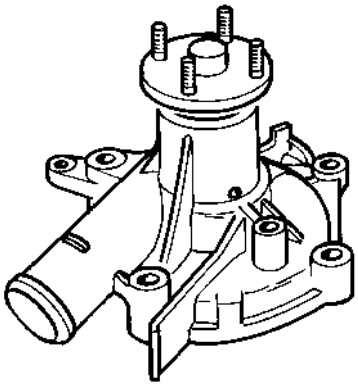

VKPC 95423

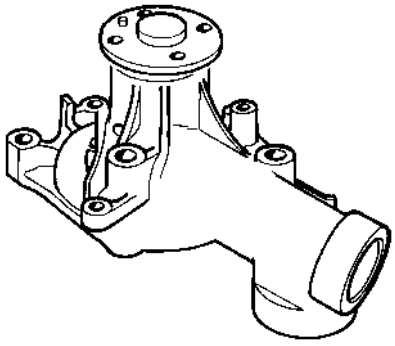

VKPC 95424

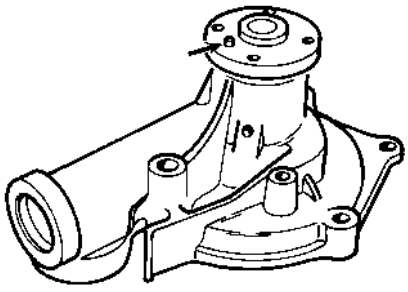

VKPC 95426

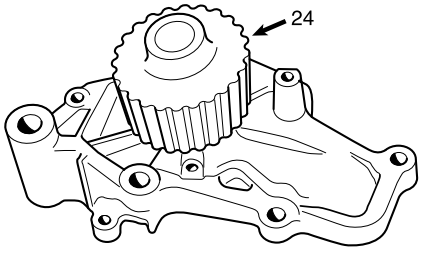

VKPC 95427

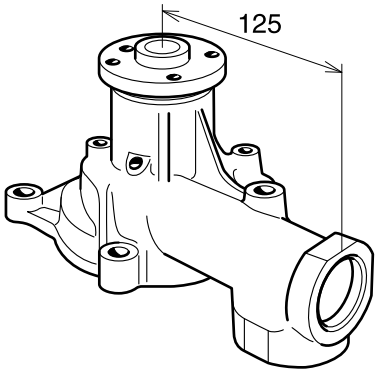

www.bergab.ru Берг АБ bergab@ya.ru Тел. (495)-228-06-21, факс (495) 223-3071

VKPC 95602

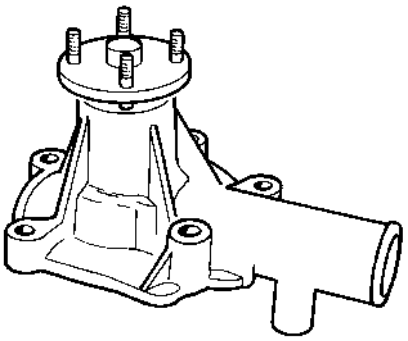

VKPC 95610

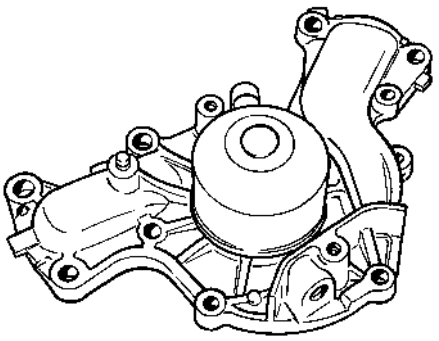

VKPC 95611

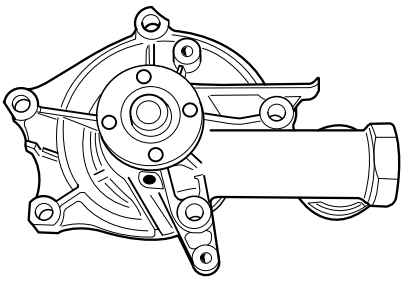

VKPC 95612

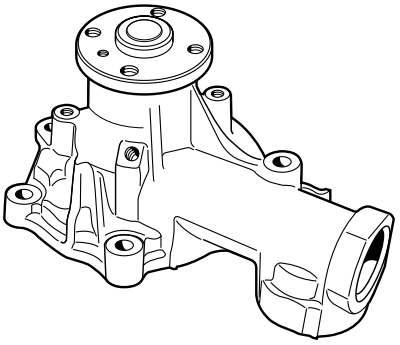

VKPC 95614

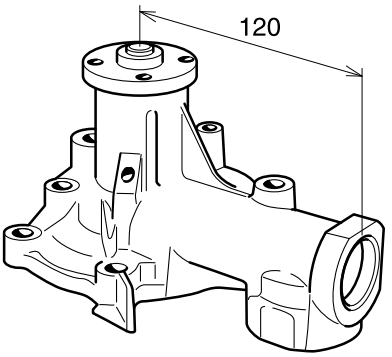

VKPC 95800

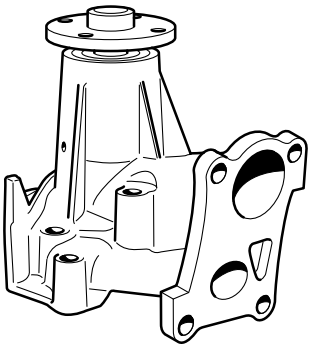

VKPC 96204

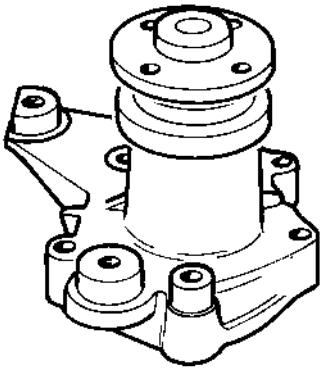

VKPC 96210

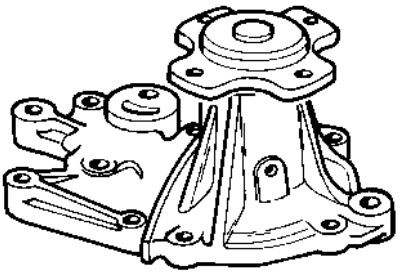

VKPC 96212

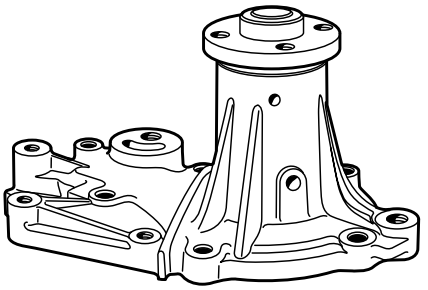

VKPC 96402

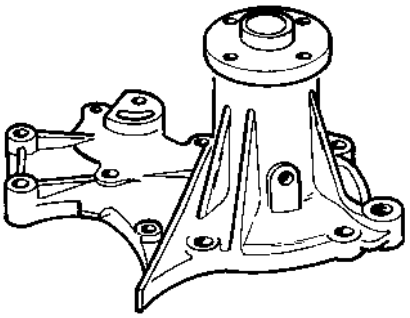

VKPC 97000

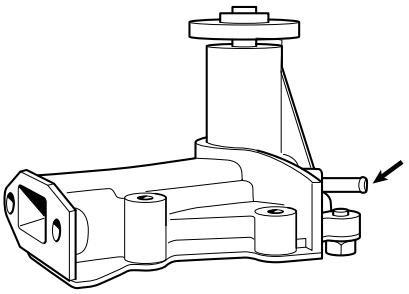

VKPC 97001

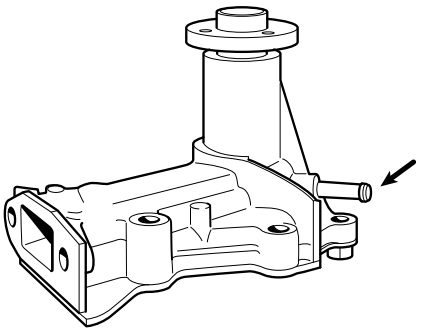

www.bergab.ru Берг АБ bergab@ya.ru Тел. (495)-228-06-21, факс (495) 223-3071

www.bergab.ru Берг АБ bergab@ya.ru Тел. (495)-228-06-21, факс (495) 223-3071

VKPC 97200

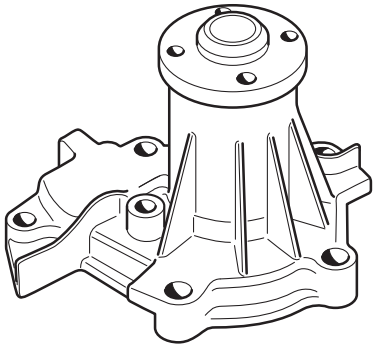

VKPC 97201

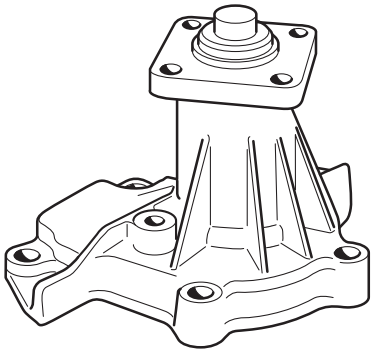

VKPC 98000

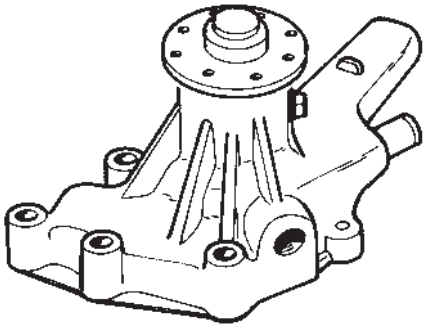

VKPC 99403

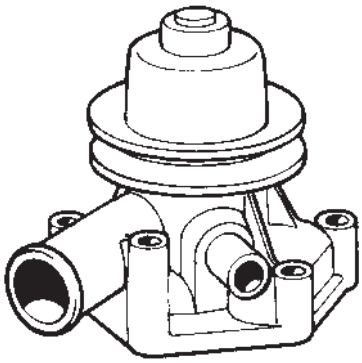

VKPC 99404

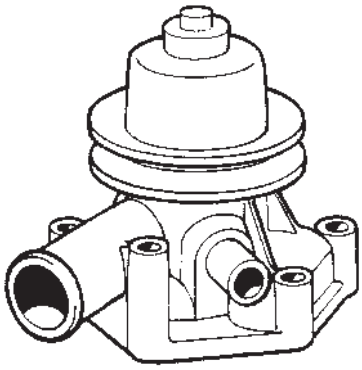

VKPC 99405

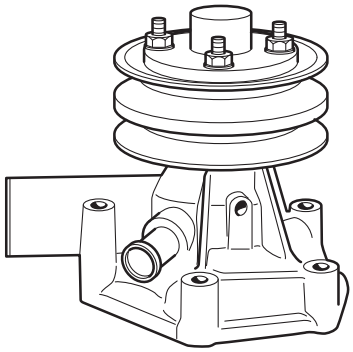

VKPC 99406

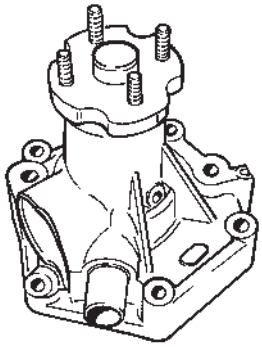

VKPC 99407

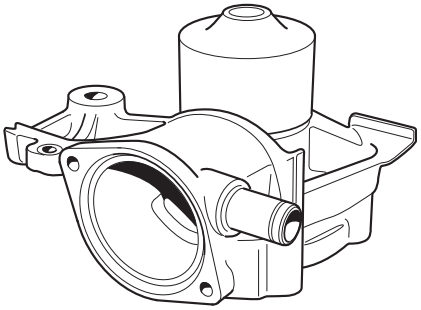

www.bergab.ru Берг АБ bergab@ya.ru Тел. (495)-228-06-21, факс (495) 223-3071

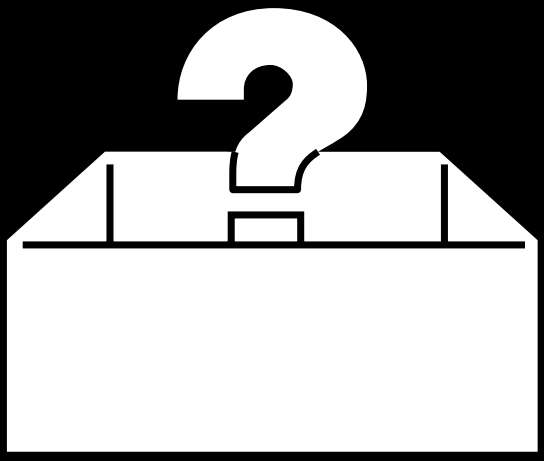

www.bergab.ru Берг АБ bergab@ya.ru Тел. (495)-228-06-21, факс (495) 223-3071

VKMC 01030	**VKPC 81605**	41113x3/4”		AUDI - VOLKSWAGEN
VKMC 01031	**VKPC 81605**	41120x18	**VKM 21031**	AUDI - VOLKSWAGEN
VKMC 01032	**VKPC 81606**	90142x19	**VKM 21032**	AUDI
VKMC 01033	VKPC 81610	41112x3/4”		VOLKSWAGEN
VKMC 01035	VKPC 81610	41119x3/4”	**VKM 21031**	VOLKSWAGEN
VKMC 01040	**VKPC 81602**	45119x25		AUDI - VOLKSWAGEN
VKMC 01100	**VKPC 81200**	41108x3/4”		VOLKSWAGEN
VKMC 01101	**VKPC 81206**	58107x20		VOLKSWAGEN
VKMC 01103	**VKPC 81204**	40280x19		AUDI - VOLKSWAGEN
VKMC 01104	**VKPC 81204**	90133x19		AUDI - VOLKSWAGEN
VKMC 05100	**VKPC 85206**	40308x17		OPEL - VAUXHALL
VKMC 05103	**VKPC 85202**	41104x15		OPEL - VAUXHALL
VKMC 05120	**VKPC 85401**	40427x17		OPEL - VAUXHALL
VKMC 05121	**VKPC 85206**	40433x17	**VKM 15121**	OPEL - VAUXHALL
VKMC 05200	**VKPC 85406**	40301x24	**VKM 25200**	OPEL - VAUXHALL
VKMC 05201	**VKPC 85408**	40353x24	**VKM 25201**	OPEL - VAUXHALL
VKMC 05400	**VKPC 85400**	40433x20		OPEL - VAUXHALL
VKMC 05401	**VKPC 85407**	40433x20		OPEL - VAUXHALL

www.bergab.ru Берг АБ bergab@ya.ru Тел. (495)-228-06-21, факс (495) 223-3071

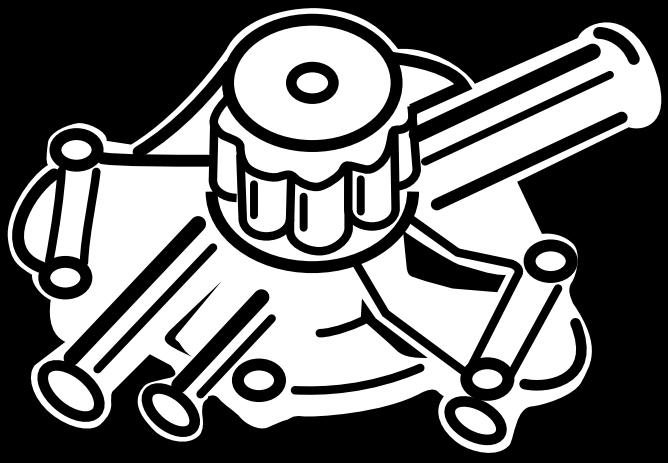

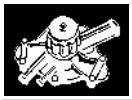

VKPA 81400	**AUDI** 80 / 90 / 100 / Coupé
	VOLKSWAGEN Golf I / Golf II / Jetta / Passat / Scirocco / TYP 2
VKPA 81401	**AUDI** 80 / 90 / 100 / A4 / A6 / S6 / Coupé
	FORD Galaxy
	SEAT Alhambra / Ibiza II / Cordoba / Toledo / Inca / Vario
	VOLKSWAGEN Caddy / Corrado / Golf / Jetta / Passat / Polo classic / Santana / Sharan / Scirocco / TYP 2 / TYP 4 / Vento / Variant
VKPA 81402	**AUDI** A4 / A6
	VOLKSWAGEN Passat
VKPA 82202	**FIAT** Cinquecento / Panda / 127 / Uno / Fiorino / Seicento
	LANCIA A112 / Delta
	SEAT 127 / Fura / Ibiza / Marbella / Panda / Terra
	ZASTAVA Koral
VKPA 82206	**FIAT** 128 / Regata / Ritmo / Uno / X1/9
	ZASTAVA Koral
VKPA 82210	**FIAT** Duna Diesel / Fiorino Diesel / Uno Diesel
	INNOCENTI Elba
VKPA 82218	**FIAT** Fiorino / Regata / Ritmo / Uno
	INNOCENTI Elba
	LANCIA Delta / Prisma
VKPA 82220	**FIAT** Panda
VKPA 82222	**FIAT** Regata / Ritmo / Uno / X 1/9
	LANCIA Delta / Prisma
VKPA 82224	**FIAT** Uno / Tempra / Tipo

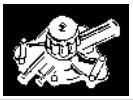

VKPA 82230	**FIAT** Punto / Tempra / Tipo
	LANCIA Delta / Dedra
VKPA 82240	**FIAT** Bravo Diesel / Brava Diesel / Tipo / Tempra
	LANCIA Epsilon
VKPA 82246	**FIAT** Tempra / Uno
	INNOCENTI Elba
VKPA 82248	**FIAT** Cinquencento
VKPA 82410	**FIAT** Ritmo Diesel
	SEAT Ibiza / Malaga / Ritmo / Ronda Diesel
VKPA 82413	**FIAT** Regata / Ritmo Diesel
VKPA 82426	**FIAT** Uno Turbo Diesel
VKPA 82428	**FIAT** Uno Diesel
VKPA 82429	**FIAT** Tempra Diesel & Turbo Diesel / Tipo Diesel
VKPA 82431	**FIAT** Uno / Tipo / Tempra / Fiorino
	INNOCENTI Elba
	LANCIA Dedra
VKPA 82435	**SEAT** Ibiza Diesel / Malaga Diesel
VKPA 82440	**FIAT** Brava Turbo Diesel / Bravo Turbo Diesel / Uno Turbo Diesel
VKPA 82441	**FIAT** Bravo / Brava / Marea / Multipla / Palio
	LANCIA Dedra / Delta
VKPA 82608	**FIAT** Regata Diesel & Turbo Diesel / Ritmo Turbo Diesel
VKPA 82618	**ALFA ROMEO** 145 Turbo Diesel / 146 Turbo Diesel / 155 Turbo Diesel
	FIAT Tempra Diesel & Turbo Diesel / Tipo Turbo Diesel

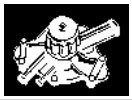

	LANCIA Dedra Turbo Diesel
VKPA 82620	**FIAT** Croma Turbo Diesel
VKPA 82626	**LANCIA** Delta Turbo Diesel / Prisma Diesel & Turbo Diesel
VKPA 82628	**LANCIA** Prisma Diesel
VKPA 82634	**FIAT** Ducato Diesel & Turbo Diesel / Talento Diesel
VKPA 82648	**FIAT** Croma Turbo Diesel
VKPA 82653	**FIAT** Palio Turbo Diesel / Punto Diesel & Turbo Diesel
VKPA 82666	**ALFA ROMEO** 145 Turbo Diesel / 146 Turbo Diesel / 155 Turbo Diesel
	FIAT Tipo Diesel
	LANCIA Dedra Turbo Diesel / Delta Turbo Diesel
VKPA 82670	**FIAT** Ducato Diesel
VKPA 82671	**FIAT** Ducato Turbo Diesel
VKPA 83200	**CITROEN** LNA / BX / Visa / C15
	PEUGEOT 104 / 205
	RENAULT R14
VKPA 83431	**CITROEN** Jumpy
	FIAT Scudo
	PEUGEOT Expert
VKPA 83432	**CITROEN** Jumpy
	FIAT Scudo
	PEUGEOT Expert
VKPA 85605	**BEDFORD** CF Diesel
	OPEL Ascona Diesel / Manta / Rekord Diesel / Campo Diesel & Turbo Diesel / Monterey Turbo Diesel
	VAUXHALL Carlton Diesel

www.bergab.ru Берг АБ bergab@ya.ru Тел. (495)-228-06-21, факс (495) 223-3071

VKPA 85608	**BEDFORD** CF
	OPEL Ascona B / Manta B / Rekord E / Senator / Monza
	VAUXHALL Carlton
VKPA 85609	**OPEL** Frontera / Monterey / Rekord E Diesel & Turbo Diesel / Senator Turbo Diesel
	VAUXHALL Carlton Diesel
VKPA 86200	**RENAULT** R4 / R6
VKPA 86206	**RENAULT** Super 5 / Clio / R9 / R11 / R19 / R21/ Express
VKPA 86209	**RENAULT** Super 5 / R21 / Express
VKPA 86212	**RENAULT** Twingo / Clio / Express
VKPA 86217	**RENAULT** Twingo
VKPA 86407	**RENAULT** Fuego / R18 / Trafic
VKPA 88200	**LADA** 2101 / 2102 / 2103 / 2104 / 2105 / Niva / Riva / Taiga / Zhiguli Vaz
VKPA 91404	**TOYOTA** Corona / Carina / Celica / Camry
VKPA 91407	**TOYOTA** Corolla / Corona / Carina
VKPA 91409	**TOYOTA** Carina / Corolla / Corona
VKPA 91413	**TOYOTA** Corolla / Tercel / Carina / Corona
VKPA 91415	**TOYOTA** Corolla / Carina / Corona / Celica
VKPA 91416	**TOYOTA** Corolla / Carina E
VKPA 91417	**TOYOTA** Starlet / Corolla / Tercel / Paseo
VKPA 91431	**TOYOTA** Tercel / Corolla
VKPA 91441	**TOYOTA** Carina E / Celica / Corolla / Avensis
VKPA 91602	**TOYOTA** Avensis / Camry / Carina / Picnic / Rav 4

VKPA 91604	**TOYOTA** Corona / Carina / Camry
VKPC 91612	**TOYOTA** Celica / MR II
VKPA 91615	**TOYOTA** Previa
VKPC 81200	**AUDI** 50 / 80 / 90
	VOLKSWAGEN Derby / Polo / Golf /Jetta / Santana / Passat / Scirocco
VKPC 81204	**SEAT** Ibiza / Cordoba
	VOLKSWAGEN Polo / Golf / Vento / Variant
VKPC 81206	**SEAT** Terra Diesel
	VOLKSWAGEN Polo Diesel
VKPC 81210	**SEAT** Arosa / Cordoba / Ibiza / Inca / Vario
	SKODA Felicia / Octavia / Pick-up
	VOLKSWAGEN Caddy / Golf III / Polo / Variant / Vento / Caddy
VKPC 81215	**SEAT** Arosa
	VOLKSWAGEN Lupo / Polo
VKPC 81400	**AUDI** 80 / 90 / 100 / Coupé
	VOLKSWAGEN Golf I / Golf II / Jetta / Passat / Scirocco / TYP 2
VKPC 81401	**AUDI** 80 / 90 / 100 / A4 / A6 / S6
	FORD Galaxy
	SEAT Alhambra / Ibiza II / Cordoba / Toledo / Inca / Vario
	VOLKSWAGEN Caddy / Corrado / Golf / Jetta / Passat / Santana / Sharan / Vento / Variant
VKPC 81402	**AUDI** A4 / A6
	VOLKSWAGEN Passat
VKPC 81405	**SKODA** Favorite
VKPC 81406	**SKODA** Felicia / Pick-up

VKPC 81407	**SEAT** Arosa / Leon / Toledo II
	SKODA Fabia
	VOLKSWAGEN Bora / Golf IV / Lupo
VKPC 81408	**AUDI** A3 / A4
	SEAT Cordoba / Ibiza II / Leon / Toledo II
	SKODA Octavia
	VOLKSWAGEN Bora / Golf IV / Passat / Polo
VKPC 81409	**SKODA** Favorite
VKPC 81411	**VOLKSWAGEN** Polo
VKPC 81412	**SKODA** Felicia
VKPC 81416	**SKODA** Fabia Diesel
	VOLKSWAGEN Polo Diesel
VKPC 81417	**AUDI** A2 Turbo Diesel
	SEAT Arosa Turbo Diesel
	SKODA Fabia Turbo Diesel
	VOLKSWAGEN Lupo Turbo Diesel / Polo Turbo Diesel
VKPC 81419	**VOLKSWAGEN** Bora / Golf IV / Lupo / Polo
VKPC 81601	**AUDI** 100
	PORSCHE 924
	VOLKSWAGEN LT
VKPC 81602	**AUDI** 100 Diesel & Turbo Diesel
	VOLKSWAGEN LT Diesel & Turbo Diesel
	VOLVO 240 Diesel / 740 & 760 Diesel / 780 Diesel / 940 & 960 Diesel
VKPC 81603	**AUDI** 100 Diesel & Turbo Diesel
VKPC 81605	**AUDI** 80 / 90 / 100 / 200 / Coupé / Sport

www.bergab.ru Берг АБ bergab@ya.ru Тел. (495)-228-06-21, факс (495) 223-3071

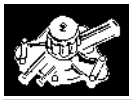

	VOLKSWAGEN Santana / Passat / Passat Syncro
VKPC 81606	**AUDI** 80 / 90 / 100 / 200 / Coupé / Sport
VKPC 81607	**VOLKSWAGEN** Transporter TYP2
VKPC 81608	**VOLKSWAGEN** Transporter TYP2
VKPC 81609	**VOLKSWAGEN** Transporter TYP2
VKPC 81610	**VOLKSWAGEN** Latenstransporter
VKPC 81611	**FORD** Galaxy
	MERCEDES Vito
	Seat Leon
	VOLKSWAGEN Golf / Vento / Passat / Sharan / TYP 4
VKPC 81612	**AUDI** 80 / 90 / 100 / A6 / S6
VKPC 81615	**AUDI** A4 Turbo Diesel
	SEAT Arosa Diesel
	SKODA Felicia Diesel / Pick-up Diesel
	VOLKSWAGEN Polo Diesel / Caddy Diesel / Lupo Diesel / Passat Diesel & Turbo Diesel
VKPC 81620	**AUDI** A3
	SEAT Alhambra / Toledo II
	SKODA Fabia / Octavia / Superb
	VOLKSWAGEN Bora / Golf IV / Golf Syncro / Sharan
VKPC 81622	**SEAT** Toledo II
	VOLKSWAGEN Bora / Golf IV / Golf Variant / Passat / Passat Syncro
VKPC 81623	**AUDI** A3 Turbo Diesel
	SEAT Cordoba / Cordoba Vario / Ibiza / Leon / Toledo II
	SKODA Octavia Diesel & Turbo Diesel

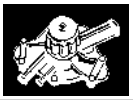

	VOLKSWAGEN Beetle / Bora / Golf IV / Golf Syncro / Golf Variant / Polo Classic / Polo Variant
VKPC 81624	**MERCEDES** Sprinter
	VOLKSWAGEN LT
VKPC 81625	**AUDI** A4 / A6 / A8
	SKODA Superb Turbo Diesel
	VOLKSWAGEN Passat
VKPC 81626	**AUDI** A3 / A3 Quattro / A4 / A4 Quattro / A4 Avant / A4 Avant Quattro / S4 / A6 / A6 Avant
	FORD Galaxy Turbo Diesel
	SEAT Alhambra Turbo Diesel
	SKODA Superb Turbo Diesel
	VOLKSWAGEN Bora / Golf IV / Passat / Passat Syncro / Sharan
VKPC 81800	**AUDI** 80 / 100 / A6 / S6 / A8 / Coupé
VKPC 81802	**AUDI** 80 / A4 / A6 / S6 / A8 / Coupé
	VOLKSWAGEN Passat
VKPC 81803	**VOLKSWAGEN** Transporter TYP 4
VKPC 81805	**AUDI** Audi 100 Turbo Diesel
VKPC 81806	**AUDI** 100 / V8
VKPC 81807	**AUDI** A6 / S6 / A8 / S8
VKPC 81811	**AUDI** A4 Quattro / A4 Avant Quattro / S4 / RS4 / A6 / A6 Avant / A6 Allroad
VKPC 82200	**ALFA ROMEO** Alfasud
VKPC 82201	**ALFA ROMEO** Alfasud / Alfa 33 / Arna / 145 / 146
	NISSAN Cherry
VKPC 82204	**FIAT** 850 / 900

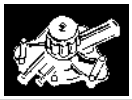

	SEAT 850
VKPC 82205	**FIAT** 600
	SEAT 600
VKPC 82206	**FIAT** 128 / Regata / Ritmo / Uno / X1/9
	LANCIA Delta / Prisma
	ZASTAVA Koral / 101 / 301 / 511 / 513
VKPC 82208	**FIAT** 127 / 147 / Panda Diesel / Uno / Ritmo / Duna / Fiorino
	INNOCENTI Elba / Mille
	LANCIA Y10
VKPC 82210	**FIAT** Duna Diesel / Fiorino Diesel
VKPC 82214	**FIAT** Cinquecento / Palio / Panda / Punto / Seicento / Tipo / Uno
	LANCIA Y10
VKPC 82216	**FIAT** Regata / Ritmo / Tempra / Tipo
	LANCIA Dedra Turbo Diesel
VKPC 82218	**FIAT** Regata / Ritmo / Uno / Fiorino
	INNOCENTI Elba
	LANCIA Delta / Prisma
VKPC 82224	**FIAT** Uno / Tempra / Tipo
VKPC 82230	**FIAT** Punto / Tempra / Tipo
	LANCIA Delta / Dedra
VKPC 82245	**FIAT** Tempra / Tipo
	LANCIA Dedra / Delta
VKPC 82246	**FIAT** Tempra / Uno
	INNOCENTI Elba
VKPC 82247	**FIAT** Brava / Bravo / Marea

www.bergab.ru Берг АБ bergab@ya.ru Тел. (495)-228-06-21, факс (495) 223-3071

VKPC 82249	**FIAT** Punto
	LANCIA Epsilon
VKPC 82250	**FIAT** Doblo / Punto / Seicento / Strada
	LANCIA Epsilon
VKPC 82404	**FIAT** 124 / 241
	SEAT 124 / 131
VKPC 82410	**FIAT** Ritmo Diesel
	SEAT Ibiza Diesel / Malaga Diesel / Ritmo Diesel / Ronda Diesel
VKPC 82412	**FIAT** 124 / 131 / 132 / Argenta
	SEAT 132
VKPC 82413	**FIAT** Ritmo Diesel / Regata Diesel
VKPC 82415	**SEAT** Ritmo
VKPC 82416	**FIAT** Ritmo
VKPC 82418	**FIAT** Regata
VKPC 82419	**SEAT** Ibiza / Malaga / Ronda
VKPC 82420	**FIAT** Croma
VKPC 82423	**ALFA ROMEO** Alfa 33 Turbo Diesel
VKPC 82424	**FIAT** Regata / Ritmo / Tipo
	LANCIA Delta / Prisma
	POLSKI 125
VKPC 82426	**FIAT** Uno Turbo Diesel
VKPC 82428	**FIAT** Uno Diesel
VKPC 82429	**FIAT** Tempra Diesel & Turbo Diesel / Tipo Diesel
	POLSKI 125
VKPC 82431	**FIAT** Uno / Tipo / Tempra / Fiorino
	INNOCENTI Elba

	LANCIA Dedra
VKPC 82432	**FIAT** Tempra / Tipo
VKPC 82434	**FIAT** Tipo
VKPC 82436	**ALFA ROMEO** 155 / 164
VKPC 82437	**FIAT** Bravo / Brava / Marea
	LANCIA Epsilon
VKPC 82441	**FIAT** Bravo / Brava / Marea / Multipla / Palio
	LANCIA Dedra / Delta
VKPC 82450	**FIAT** Tempra / Tipo
VKPC 82451	**ALFA** Alfa 145 / Alfa 146 / Alfa 155 / Alfa 156
VKPC 82600	**ALFA ROMEO** 35 AR Turbo Diesel
	FIAT Ducato Diesel
VKPC 82604	**FIAT** Regata Diesel / Ritmo Diesel
VKPC 82606	**FIAT** 131 Diesel / 132 Diesel / Argenta Diesel / Campagnola Diesel
	IVECO Daily Turbo Diesel / Grinta Turbo Diesel
	SEAT 131 Diesel
VKPC 82608	**FIAT** Regata Diesel & Turbo Diesel / Ritmo Turbo Diesel
VKPC 82614	**ALFA ROMEO** Alfa 164
	FIAT Croma
	LANCIA Thema
VKPC 82616	**FIAT** Croma Diesel & Turbo Diesel
	LANCIA Thema Turbo Diesel
VKPC 82618	**ALFA ROMEO** Alfa 155 Turbo Diesel
	FIAT Tempra Diesel & Turbo Diesel / Tipo Turbo Diesel

	LANCIA Dedra Turbo Diesel
VKPC 82619	**SEAT** 132
VKPC 82620	**FIAT** Croma Turbo Diesel
VKPC 82621	**ALFA ROMEO** Alfetta / Giulietta / Alfa 75 / Alfa 90
VKPC 82622	**FIAT** Tempra / Tipo / Croma
	LANCIA Dedra / Thema
VKPC 82623	**ALFA ROMEO** Giulietta Turbo Diesel / Alfetta Turbo Diesel / Alfa 75 Turbo Diesel / Alfa 90 Turbo Diesel / Alfa 6 Turbo Diesel
VKPC 82626	**LANCIA** Delta Turbo Diesel / Prisma Diesel & Turbo Diesel
VKPC 82629	**FIAT** Croma
	LANCIA Thema / Kappa
VKPC 82630	**ALFA ROMEO** 35 AR Turbo Diesel
	IVECO Daily / Grinta
	RENAULT Master Diesel / Trafic Diesel
VKPC 82631	**IVECO** Daily Turbo Diesel
VKPC 82632	**ALFA ROMEO** Alfa 164
VKPC 82633	**ALFA ROMEO** Alfetta / GTV / Alfa 6 / Alfa 75 / Alfa 90
VKPC 82635	**ALFA ROMEO** Giulietta Turbo Diesel / Alfa 75 Turbo Diesel / Alfa 90 Turbo Diesel
VKPC 82636	**ALFA ROMEO** Alfa 164 Turbo Diesel
VKPC 82638	**FIAT** Croma Turbo Diesel
	LANCIA Thema Turbo Diesel
	RENAULT Safrane Turbo Diesel
VKPC 82642	**ALFA ROMEO** Alfa Nuova 33 Turbo Diesel / Alfa 155 Turbo Diesel / Alfa 164 Turbo Diesel
	CHRYSLER Voyager Turbo Diesel

www.bergab.ru Берг АБ bergab@ya.ru Тел. (495)-228-06-21, факс (495) 223-3071

	FORD Granada Turbo Diesel / Scorpio Turbo Diesel
	ROVER 825 Turbo Diesel
VKPC 82643	**FIAT** Ducato Diesel
VKPC 82645	**ALFA ROMEO** Alfa 145 / Alfa 146 / Alfa 155 / Alfa 156
	FIAT Barchetta / Brava / Bravo / Coupé / Marea
	LANCIA Delta / Dedra
VKPC 82646	**FIAT** Bravo / Coupé / Marea / Stilo
	LANCIA Kappa
VKPC 82647	**FIAT** Tipo / Tempra
	LANCIA Delta / Dedra
VKPC 82649	**IVECO** Daily Turbo Diesel / Grinta Turbo Diesel
VKPC 82650	**IVECO** Daily Turbo Diesel / Grinta Turbo Diesel
VKPC 82651	**IVECO** Daily Turbo Diesel / Grinta Turbo Diesel
VKPC 82652	**FIAT** Ducato Diesel & Turbo Diesel
VKPC 82660	**ALFA** Alfa 155
	FIAT Coupé
	LANCIA Delta
VKPC 82665	**ALFA ROMEO** 156 Turbo Diesel
	FIAT Brava Turbo Diesel / Bravo Turbo Diesel / Marea Turbo Diesel / Multipla Turbo Diesel / Palio Turbo Diesel
	LANCIA Kappa Turbo Diesel / Lybra JTD
VKPC 82800	**ALFA ROMEO** Alfa 75 / Alfa 164
	FIAT Croma
VKPC 82810	**CHRYSLER** Voyager Turbo Diesel / Grand Voyager Turbo Diesel

	FORD Granada Diesel / Scorpio Diesel
	OPEL Frontera Turbo Diesel
	RENAULT Jeep Cherokee Turbo Diesel / Jeep Grand Cherokee Turbo Diesel
	VAUXHALL Frontera Turbo Diesel
VKPC 83200	**CITROEN** LNA / Visa / BX / C15E
	PEUGEOT 104 / 205
	RENAULT R14
	TALBOT Simca
VKPC 83203	**PEUGEOT** 204 / 304 / 305
VKPC 83205	**CITROEN** AX / BX / ZX / Saxo / Xsara / Berlingo / C15E
	PEUGEOT 106 / 205 / 206 / 306 / 309 / 405 / Partner
	ROVER 114 Diesel
VKPC 83206	**CITROEN** C15E
	PEUGEOT 205 / 309
	TALBOT Alpine / Horizon / Matra / Simca / Solara
VKPC 83401	**CITROEN** Visa / BX / ZX / C15 Diesel
	PEUGEOT 205 / 305 /309 / 405
	TALBOT Horizon Diesel
VKPC 83403	**PEUGEOT** 504 / 505
VKPC 83408	**PEUGEOT** J7 / J9
VKPC 83409	**PEUGEOT** J7 / J9
VKPC 83411	**PEUGEOT** 505
	TALBOT Chrysler / Tagora
VKPC 83417	**TALBOT** Sunbeam
VKPC 83420	**CITROEN** ZX / Xantia / XM / Evasion /

	Berlingo / C15 / Jumper / Jumpy / Xsara
	FIAT Ducato / Scudo / Ulysse
	HYUNDAI Lantra Diesel
	LANCIA Zeta
	PEUGEOT 205 / 306 / 405 / 406 / 605 / 806 / Expert / Boxer / Partner / J5
	ROVER 218 Diesel / 418 Diesel
VKPC 83423	**FORD** Granada Diesel / Scorpio Diesel / Sierra Diesel
	PEUGEOT 505 Diesel
VKPC 83424	**CITROEN** Visa / BX / ZX / Xantia / C15 / C25
	LADA Niva
	PEUGEOT 205 / 305 / 306 / 309 / 405 / J5
	ROVER 218 Diesel / 418 Diesel
VKPC 83425	**CITROEN** Xantia Turbo Diesel / XM Turbo Diesel / Evasion Turbo Diesel
	FIAT Ulysse
	PEUGEOT 406 Turbo Diesel / 605 Turbo Diesel / 806 Turbo Diesel
VKPC 83428	**CITROEN** AX / BX / Saxo / Xsara / ZX
	LADA Samara Diesel
	PEUGEOT 106 / 205 / 206 / 306 / 309 / 405
	ROVER 115 Diesel
VKPC 83430	**CITROEN** Saxo / C3 / Xsara / Berlingot
	PEUGEOT 106
VKPA 83603	**PEUGEOT** 505 Turbo Diesel / 604
VKPC 83604	**FORD** Granada Turbo Diesel / Sierra Turbo Diesel / Scorpio Turbo Diesel

www.bergab.ru Берг АБ bergab@ya.ru Тел. (495)-228-06-21, факс (495) 223-3071

www.bergab.ru Берг АБ bergab@ya.ru Тел. (495)-228-06-21, факс (495) 223-3071

	PEUGEOT 505 Turbo Diesel / 604 Turbo Diesel
VKPC 83605	**PEUGEOT** 404 Diesel / 504 Diesel / 505 Diesel
VKPC 83607	**CITROEN** C32 Diesel / C35 Diesel
	FIAT 242 Diesel
VKPC 83612	**PEUGEOT** 404 / 504
VKPC 83614	**PEUGEOT** 504 Diesel
VKPC 83615	**CITROEN** BX / Evasion / Xantia / Xsara / ZX
	FIAT Ulysse
	PEUGEOT 205 / 306 / 309 / 405 / 406 / 806 / Partner
VKPC 83616	**FORD** Granada Diesel
	PEUGEOT 504 Diesel
VKPC 83617	**CITROEN** CX Diesel / C25 Diesel
	FIAT Ducato Diesel
	PEUGEOT J5 Diesel
VKPC 83618	**PEUGEOT** 504 / 505
VKPC 83620	**PEUGEOT** J7 Diesel / J9 Diesel
VKPC 83622	**PEUGEOT** J7 / J9
VKPC 83624	**PEUGEOT** 505
VKPC 83625	**PEUGEOT** 505
VKPC 83626	**CITROEN** CX
VKPC 83627	**CITROEN** CX
VKPC 83628	**PEUGEOT** J9 Diesel
VKPC 83630	**CITROEN** C25
	FIAT Ducato / Talento
	PEUGEOT J5

VKPC 83635	**CITROEN** Xantia / Xsara
	PEUGEOT 306 / 406
VKPC 83636	**CITROEN** Xantia / Xsara / XM / ZX
	FIAT Ulysse
	PEUGEOT 306 / 406 / 605 / 806
VKPC 83637	**CITROEN** Xantia / XM
	PEUGEOT 406
VKPC 83639	**CITROEN** C5 / Evasion / Jumpy / Xantia / Xsara
	FIAT Scudo Diesel / Ulysse Turbo Diesel
	LANCIA Zeta Turbo Diesel
	PEUGEOT Partner / 206 / 306 / 307 / 406 / 607 / 806 / 807
VKPC 83810	**CITROEN** Jumper Diesel & Turbo Diesel / XM Turbo Diesel
	PEUGEOT Boxer Diesel & Turbo Diesel
VKPC 83811	**CITROEN** Jumper Diesel & Turbo Diesel
	PEUGEOT Boxer Diesel & Turbo Diesel
VKPC 84200	**FORD** Escort / Capri / Corsair / Cortina
VKPC 84201	**FORD** Escort / Capri / Cortina
VKPC 84202	**FORD** Escort / Capri / Cortina
VKPC 84205	**FORD** Fiesta / Escort / Orion
VKPC 84206	**FORD** Escort
VKPC 84207	**FORD** Fiesta / Escort / Orion
VKPC 84208	**FORD** Fiesta / Escort / Orion / Courier
VKPC 84209	**FORD** Fiesta / Escort / Orion / Courier
VKPC 84210	**FORD** Fiesta / Escort / Orion / Courier

VKPC 84215	**FORD** Fiesta / Focus / Puma
	MAZDA 121
VKPC 84216	**FORD** Ka
	MAZDA 121
VKPC 84400	**FORD** Taunus / Capri / Consul / Corsair / Granada / Transit
	SAAB 95 / 96
VKPC 84403	**FORD** Fiesta Diesel / Escort Diesel / Orion Diesel
VKPC 84405	**FORD** Granada / Scorpio / Sierra / Transit
VKPC 84406	**FORD** Fiesta / Escort / Orion
VKPC 84407	**FORD** Mondeo
VKPC 84408	**FORD** Escort Turbo Diesel / Mondeo Turbo Diesel
VKPC 84409	**FORD** Fiesta Turbo Diesel / Escort Turbo Diesel / Orion Turbo Diesel / Sierra Turbo Diesel
VKPC 84410	**FORD** Fiesta Turbo Diesel / Escort Turbo Diesel / Orion Turbo Diesel / Sierra Turbo Diesel / P100 Turbo Diesel
VKPC 84411	**FORD** Scorpio / Sierra
VKPC 84412	**FORD** Escort / Galaxy / Sierra
VKPC 84415	**FORD** Cougar / Focus / Mondeo
VKPC 84416	**FORD** Focus Turbo Diesel
VKPC 84600	**FORD** Capri / Consul / Cortina / Escort / Granada / P100 / Sierra / Taunus / Transit
VKPC 84601	**FORD** Capri / Cortina / Granada / P100 / Scorpio / Sierra / Taunus / Transit
VKPC 84603	**FORD** Transit Diesel
VKPC 84606	**FORD** Capri / Consul / Cortina / Granada / Taunus

www.bergab.ru Берг АБ bergab@ya.ru Тел. (495)-228-06-21, факс (495) 223-3071

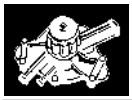

VKPC 84607	**FORD** Capri / Cortina / Consul / Granada / Sierra / Taunus
VKPC 84608	**FORD** Capri / Cortina / Granada / Sierra / Taunus
VKPC 84609	**FORD** Capri / Granada / Scorpio / Sierra
VKPC 84610	**FORD** Fiesta / Sierra
VKPC 84611	**SAAB** 900
VKPC 84612	**SAAB** 9000
VKPC 84613	**SAAB** 9000
VKPC 84616	**FORD** Transit Diesel
VKPC 84617	**FORD** Transit Diesel
VKPC 84618	**FORD** Transit Diesel
VKPC 84620	**FORD** Courier Diesel / Escort Diesel / Fiesta Diesel / Orion Diesel / P100 Diesel / Sierra Diesel
	MAZDA 121 Diesel
VKPC 85200	**OPEL** Ascona / Kadett / Manta
VKPC 85201	**BEDFORD** Astra van
	OPEL Corsa / Kadett
	VAUXHALL Nova / Astra
VKPC 85202	**BEDFORD** Astra van
	OPEL Ascona / Corsa / Kadett / Manta
	VAUXHALL Nova / Astra / Cavalier MK II
VKPC 85203	**OPEL** Ascona / Kadett C / Manta B
VKPC 85206	**BEDFORD** Astra van
	DAEWOO Espero
	OPEL Astra / Corsa / Kadett / Vectra / Zafira

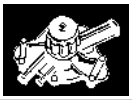

	VAUXHALL Nova / Corsa / Astra / Belmont / Cavalier MK III / Vectra
VKPC 85211	**OPEL** Astra / Corsa / Tigra / Vectra / Zafira
	VAUXHALL Astra Mk III / Corsa / Tigra / Vectra
VKPC 85220	**OPEL** Astra / Corsa B / Corsa C / Tigra / Agila
VKPC 85400	**BEDFORD** Astra van
	DAEWOO Espero
	OPEL Ascona / Kadett / Manta / Rekord
	VAUXHALL Astra / Belmont / Cavalier
VKPC 85401	**BEDFORD** Astra van
	OPEL Ascona / Corsa / Kadett / Vectra
	VAUXHALL Nova / Astra / Belmont / Cavalier
VKPC 85403	**OPEL** Corsa Diesel & Turbo Diesel / Kadett Diesel & Turbo Diesel
	VAUXHALL Nova Diesel
VKPC 85404	**OPEL** Astra Turbo Diesel / Corsa Diesel & Turbo Diesel / Kadett Diesel & Turbo Diesel / Tigra Diesel & Turbo Diesel / Vectra Turbo Diesel
	VAUXHALL Nova Diesel & Turbo Diesel / Corsa Diesel & Turbo Diesel / Astra MK III Turbo Diesel / Cavalier MK III Diesel & Turbo Diesel
VKPC 85406	**BEDFORD** Astra van Diesel
	OPEL Ascona Diesel / Kadett Diesel
	VAUXHALL Astra Diesel / Belmont Diesel / Cavalier Diesel
VKPC 85407	**BEDFORD** Astra van
	DAEWOO Espero / Nexia

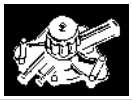

	OPEL Ascona / Astra / Calibra / Frontera / Kadett / Omega / Vectra
	VAUXHALL Astra / Belmont / Cavalier
VKPC 85408	**BEDFORD** Astra van Diesel
	OPEL Ascona Diesel / Kadett Diesel / Vectra Diesel
	VAUXHALL Astra Diesel / Belmont Diesel / Cavalier Diesel
VKPC 85409	**OPEL** Astra / Calibra / Frontera / Kadett / Omega / Vectra
	VAUXHALL Cavalier Mk III / Calibra / Vectra / Omega
VKPC 85410	**OPEL** Corsa A / Corsa B / Tigra
	VAUXHALL Corsa B Diesel & Turbo Diesel
VKPC 85600	**BEDFORD** CF
	OPEL Admiral / Ascona / Commodore / Kadett / Kapitaen / Manta / Monza / Rekord / Senator
	VAUXHALL Cavalier MK I / Carlton MK I / Royale / Viceroy
VKPC 85603	**OPEL** Omega A / Senator / Frontera
	VAUXHALL Carlton MK II / Frontera
VKPC 85610	**OPEL** Astra / Calibra / Kadett / Vectra
	VAUXHALL Astra MK III / Cavalier MK III / Calibra
VKPC 85611	**DAEWOO** Leganza / Nubira
	OPEL Astra / Calibra / Frontera / Kadett / Omega / Sintra / Vectra / Zafira
	VAUXHALL Astra Mk III / Cavalier Mk III / Calibra / Omega / SIntra
VKPC 85613	**OPEL** Calibra / Omega / Sintra / Vectra

www.bergab.ru Берг АБ bergab@ya.ru Тел. (495)-228-06-21, факс (495) 223-3071

	SAAB 900 / 9000
	VAUXHALL Calibra / Omega / Sintra / Vectra
VKPC 85620	**OPEL** Astra Turbo Diesel / Corsa Turbo Diesel / Tigra Diesel / Vectra Turbo Diesel
VKPC 85621	**OPEL** Corsa Diesel & Turbo Diesel / Tigra Diesel & Turbo Diesel
	VAUXHALL Corsa Diesel & Turbo Diesel
VKPC 85622	**OPEL** Corsa Turbo Diesel / Tigra Turbo Diesel
	VAUXHALL Corsa Turbo Diesel
VKPC 85623	**OPEL** Astra II Turbo Diesel / Frontera Turbo Diesel / Omega B Turbo Diesel / Sintra Turbo Diesel / Vectra Turbo Diesel / Zafira Turbo Diesel
	SAAB 9-3 Turbo Diesel
VKPC 85624	**OPEL** Astra / Vectra B / Vectra C / Zafira / Corsa C
VKPC 86200	**RENAULT** R4 / R6
VKPC 86201	**RENAULT** R4 / R5 / R6
VKPC 86202	**RENAULT** R5
VKPC 86203	**RENAULT** R8 / R10
	VOLVO DAF
VKPC 86205	**RENAULT** R4 / R5
VKPC 86206	**RENAULT** Super 5 / Clio / R5 / R9 / R11 / R19 / R21/ Express
VKPC 86208	**RENAULT** Estafette
VKPC 86209	**RENAULT** Super 5 / R21 / Express
VKPC 86212	**RENAULT** Twingo / Clio / Express
VKPC 86215	**RENAULT** Clio / Kangoo / Twingo
VKPC 86216	**RENAULT** Clio / Express / Kangoo / Mégane

VKPC 86217	**RENAULT** Twingo
VKPC 86401	**RENAULT** R18 / Fuego / Trafic
VKPC 86402	**RENAULT** R18 / Fuego / Trafic
	VOLVO 340
VKPC 86403	**RENAULT** R12 / R15
	VOLVO 66 / 340
VKPC 86405	**RENAULT** R20 / R25 / Trafic / Master
VKPC 86407	**RENAULT** Fuego / R18 / Trafic
VKPC 86408	**RENAULT** R21 / Master
VKPC 86409	**RENAULT** Clio / R19 / Express
VKPC 86410	**RENAULT** R12 / R16
VKPC 86412	**RENAULT** R18
VKPC 86413	**DACIA** Duster / Shifter
	MITSUBISHI Carisma Turbo Diesel
	RENAULT Super 5 / R9 / R11 / R19 / R21/ Clio / Espace / Express Diesel / Kangoo Diesel / Laguna / Megane / Trafic
	VOLVO 340 / 360 / 440 / 460 / 480 / S40 / V40 / 440 / 460 Turbo Diesel
VKPC 86415	**RENAULT** Clio / Mégane
VKPC 86416	**RENAULT** Clio / Laguna / Mégane
VKPC 86601	**RENAULT** R25 Diesel / Trafic Diesel
VKPC 86602	**RENAULT** R18 / Espace / Fuego / Master
VKPC 86603	**RENAULT** R21 / R25 / Espace / Master / Trafic
VKPC 86604	**RENAULT** R25 Turbo Diesel
VKPC 86606	**RENAULT** Safrane
VKPC 86607	**VOLVO** 110 Series / 120 Series / 130 Series / 140 Series

VKPC 86609	**VOLVO** 240 / 740 / 760 / 780 / 940 / 960
VKPC 86610	**VOLVO** 240 / 360 / 740 / 760
VKPC 86612	**VOLVO** 360
VKPC 86614	**VOLVO** 360
VKPC 86615	**RENAULT** Safrane Turbo Diesel
VKPC 86616	**RENAULT** Safrane Turbo Diesel
VKPC 86618	**RENAULT** Laguna / Safrane
	VOLVO 850 / 940 / 960 / S40 / V40 / S70 / V70 / C70 / S80 / S90 / V90
VKPC 86619	**AUDI** A6 Turbo Diesel / S6 Turbo Diesel
	VOLKSWAGEN Latentransporter Diesel & Turbo Diesel / TYP4 Diesel & Turbo Diesel
	VOLVO 850 Turbo Diesel / 940 Diesel & Turbo Diesel / 960 Diesel & Turbo Diesel / S70,V70,C70 Turbo Diesel
VKPC 86621	**RENAULT** Espace Diesel & Turbo Diesel
VKPC 86622	**RENAULT** R25 Turbo Diesel
VKPC 86623	**RENAULT** R20 Diesel & Turbo Diesel / R25 Diesel / R30 Diesel & Turbo Diesel / Cherokee Diesel / Jeep Diesel & Turbo Diesel / Trafic
VKPC 86630	**SAAB** 9-5 / 900
VKPC 86631	**RENAULT** Laguna Diesel & Turbo diesel
VKPC 86633	**RENAULT** Espace Diesel / Laguna Diesel & Turbo diesel / Safrane Turbo Diesel
VKPC 87200	**ROVER** A 35 / A 40 / Marina / Metro / MG Midget / Mini / Minor
VKPC 87203	**DAITHATSU** Charade Diesel
	INNOCENTI 990 / Mintre
VKPC 87205	**ROVER** Maestro / Montego

www.bergab.ru Берг АБ bergab@ya.ru Тел. (495)-228-06-21, факс (495) 223-3071

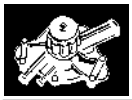

VKPC 87206	**ROVER** Allegro
VKPC 87207	**ROVER** Maestro
VKPC 87400	**ROVER** Metro / 111 / 114 / 214 / 414
VKPC 87401	**LOTUS** Elise
	ROVER Metro / 114 / 214 / 414
VKPC 87403	**ROVER** Maestro / Montego / 216 / 414
VKPC 87404	**HONDA** Civic / Concerto / Coupé / CRX / Integra / Quint
	ROVER 216 / 414
VKPC 87600	**ROVER** Land Rover Turbo Diesel / Rover SD1 Diesel
VKPC 87602	**ROVER** Land Rover
VKPC 87606	**DAF** Van Diesel
	ROVER Freight Rover Diesel / Leyland Sherpa Diesel
VKPC 87607	**ROVER** 820
VKPC 87609	**ROVER** Maestro / Montego
VKPC 87610	**HONDA** Legend
	ROVER 825 / 827
VKPC 87800	**ROVER** Land Rover / Santana
VKPC 87813	**HONDA** Accord Turbo Diesel / Civic Turbo Diesel
	ROVER 220 / 420 / 620 / 820
VKPC 87814	**HONDA** Prelude / Accord
	ROVER 623
VKPC 87816	**ROVER** 220 / 420 / 820
VKPC 87835	**ROVER** Discovery Turbo Diesel / Range Rover Turbo Diesel
VKPC 88200	**LADA** 2101 / 2102 / 2103 / 2104 / 2105 / Niva / Riva / Taiga / Zhiguli Vaz

VKPC 88203	**LADA** Samara
VKPC 88204	**SKODA** S105 / S120
VKPC 88206	**MERCEDES** Classe A / Classe A Turbo Diesel
VKPC 88600	**BMW** 1500 / 1600 / 1800 / 2000
VKPC 88603	**BMW** 320 / 323 / 326 / 520 / 526
VKPC 88604	**MERCEDES-BENZ** 190 / 200 / 230 / 309
VKPC 88605	**BMW** 320 / 323 / 325 / 326 / 520 / 525 / 526
VKPC 88607	**BMW** 320i / 323i / 325i / 520i / Z1
VKPC 88608	**MERCEDES-BENZ** 190 Diesel / 200 Diesel & Turbo Diesel
VKPC 88609	**BMW** 315 / 316 / 318 / 318i / 320i / 518 / 520i
VKPC 88610	**BMW** 316 / 316S / 316i / 318i / 518 / 518i
VKPC 88611	**BMW** 316 / 316S / 316i / 318i / 518 / 518i
VKPC 88612	**BMW** 524 Turbo Diesel
VKPC 88613	**MERCEDES-BENZ** 200 / 208 / 210 / 230 / G230 / 280 / 308 / 310 / 408 / 409 / 410
VKPC 88614	**BMW** 324 Diesel & Turbo Diesel / 524 Diesel & Turbo Diesel
VKPC 88615	**BMW** 316i / 318i / 518i / Z3
VKPC 88616	**BMW** 316i / 318i / 518i
VKPC 88617	**BMW** 320i / 323i / 325i / 328i / 520i / 525i / 528i / 728i / Z3
VKPC 88619	**MERCEDES-BENZ** 190 / 200 / 230
VKPC 88620	**MERCEDES-BENZ** 108 / 110 / 190 / 200 / 208 / 210 / 250 / 290 / 300 / 308 / 310 / 350 / 408 / 410 / 508 / Sprinter
VKPC 88622	**MERCEDES-BENZ** C180 / 200 / SL200 / 208 / 220 / 230

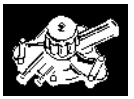

VKPC 88625	**MERCEDES-BENZ** 200 Diesel / 220 Diesel
VKPC 88631	**MERCEDES** C200 / C230 / CLK 200 / CLK 230 / E 200 / ML E23 / SL 200 / SL 230
VKPC 88632	**BMW** 320 Turbo Diesel
VKPC 88802	**BMW** 525i / 528i / 530i / 535i / 628 / 633 / 635 / 728 / 730 / 732i / 735i / 745i
VKPC 88803	**MERCEDES-BENZ** 220 / 230 / 250
VKPC 88804	**MERCEDES-BENZ** 190 / 300
VKPC 88807	**MERCEDES-BENZ** 100 Diesel / 200 / 207 Diesel / 208 / 210 / 220 / 230 / 240 Diesel & Turbo Diesel / 250 / 280 / 300 / 307 Diesel / 308 / 310 / 406 Diesel /407 Diesel / 507 Diesel
VKPC 88808	**MERCEDES-BENZ** 100 Diesel / 307 Diesel / 309 Diesel / 409 Diesel
VKPC 88809	**MERCEDES-BENZ** 200 Diesel / 207 Diesel / 208 Diesel / 209 Diesel / 300 Diesel / 307 Diesel / 309 Diesel / 407 Diesel
VKPC 88810	**MERCEDES-BENZ** 190 / 260 / 300
VKPC 88813	**MERCEDES-BENZ** 250 / 280
VKPC 88816	**MERCEDES-BENZ** 300
VKPC 88817	**MERCEDES-BENZ** 380 / 500
VKPC 88818	**MERCEDES-BENZ** 380 / 500
VKPC 88820	**MERCEDES-BENZ** 400 / 420 / 500
VKPC 88821	**MERCEDES-BENZ** 280 / 300 / 320
VKPC 88824	**MERCEDES-BENZ** 280 / 320
VKPC 88825	**MERCEDES-BENZ** 300
VKPC 88826	**BMW** 318 Turbo Diesel / 325 Turbo Diesel / 525 Turbo Diesel / 725 Turbo Diesel
	OPEL Omega B Turbo Diesel
	VAUXHALL Omega Turbo Diesel

www.bergab.ru Берг АБ bergab@ya.ru Тел. (495)-228-06-21, факс (495) 223-3071

VKPC 88827	**MERCEDES-BENZ** 420 / 500 / 560 / G500
VKPC 88828	**MERCEDES-BENZ** 280 / 300 / 320 / G320
VKPC 88829	**BMW** 535i / 540i / 735i / 740i / 840i
VKPC 88830	**BMW** 730i / 735i / 740i / 840i
VKPC 88831	**BMW** 530i / 540i / 730i / 740i / 840i
VKPC 88835	**MERCEDES** 400 / 420 / 500
VKPC 88836	**MERCEDES** SLK 230 / 280 / 320
VKPC 88842	**MERCEDES** 250 / 300 / C250 / E250 / E300 / G300 / GD350 / S300 / S350 / SD300
VKPC 88843	**MERCEDES** C200 TURBO DIESEL / C220 TURBO DIESEL / C 270 TURBO DIESEL
VKPC 88844	**MERCEDES** E200 / E230 / Vito
VKPC 88845	**MERCEDES** E200 / E230 / Vito
VKPC 88846	**MERCEDES** C240 / C280 / C430 / CLK320 / CLK430 / E240 / E280 / E320 / E430 / E550 / G320 / G500 / ML430 / SL500
VKPC 88847	**MERCEDES** C240 / C280 / C430 / CLK320 / CLK430 / E240 / E280 / E320 / E430 / E550 / G320 / G500 / ML430 / SL500
VKPC 88848	**SMART** 600/800 Turbo-Diesel
VKPC 90200	**DAEWOO** Espero / Lanos / Nexia
VKPC 90202	**DAEWOO** Lanos
VKPC 90402	**DAEWOO** Nubira
VKPC 91201	**TOYOTA** Starlet Diesel
VKPC 91402	**DAIHATSU** Charmant
	TOYOTA Corolla / Starlet
VKPC 91403	**TOYOTA** Corolla / Corona / Carina / Celica / Camry / Chaser / Cresta / Cressida / Liteace / Townace
VKPC 91404	**TOYOTA** Camry / Carina / Celica / Corona / Cressida
VKPC 91405	**TOYOTA** Avensis Turbo Diesel / Camary Diesel / Corolla Diesel / Corona Diesel / Carina Diesel / Liteace Diesel / Model-F Diesel / Townace Diesel
VKPC 91407	**TOYOTA** Carina / Celica / Corolla / Corona
VKPC 91409	**TOYOTA** Carina / Celica / Corolla / Corona / MR II
VKPC 91410	**TOYOTA** Carina
VKPC 91412	**TOYOTA** Corolla / Carina / Celica
VKPC 91414	**TOYOTA** Celica / Corolla / Carina / Corona / MR II
VKPC 91415	**TOYOTA** Corolla / Carina / Corona / Celica
VKPC 91416	**TOYOTA** Corolla / Carina E
VKPC 91417	**TOYOTA** Starlet / Corolla / Tercel / Paseo
VKPC 91419	**TOYOTA** Starlet / Publica / Corolla
VKPC 91424	**TOYOTA** Corona / Hiace / Hilux / Toyoace / Townace
VKPC 91427	**TOYOTA** Publica / Liteace / Townace
VKPC 91428	**TOYOTA** Corona / Cressida / Crown / Dyna / Liteace / Hiace / Hilux / Townace / Toyoace / Model-F
	VOLKSWAGEN Taro
VKPC 91431	**TOYOTA** Tercel / Corolla
VKPC 91442	**TOYOTA** Celica
VKPC 91604	**TOYOTA** Corona / Carina / Camry / MR II / Blizzard / Celica
VKPC 91606	**TOYOTA** Blizzard Diesel / Cressida Diesel / Crown Diesel / Dyna Diesel / Hilux Diesel / Hiace Diesel / Toyoace Diesel / Land Cruiser Turbo Diesel
VKPC 91607	**TOYOTA** Cressida Diesel / Crown Turbo Diesel / Dyna Diesel / Hilux Diesel / Hiace Diesel / Toyoace Diesel / Land Cruiser Diesel
	VOLKSWAGEN Taro Diesel
VKPC 91613	**TOYOTA** Carina / Corona / Celica / Camry / Cressida / MR II / Picnic / RAV-4
VKPC 91616	**TOYOTA** Carina / Camary / Corona / Cressida / Dyna / Celica
VKPC 91617	**TOYOTA** Celica / Corona / Hilux / Landcruiser
VKPC 91804	**TOYOTA** Hilux
VKPC 92201	**NISSAN** Cherry / Sunny / Violet / Van-ette
VKPC 92203	**NISSAN** Cherry / Sunny / Violet / Vanette
VKPC 92204	**NISSAN** Micra
VKPC 92205	**NISSAN** Cherry / Sunny / Prairie
VKPC 92207	**NISSAN** Bluebird / Pickup / Silvia / Violet
VKPC 92208	**NISSAN** Micra
VKPC 92209	**NISSAN** Micra
VKPC 92401	**NISSAN** Bluebird / Prairie / Stanza
VKPC 92404	**NISSAN** Bluebird / Prairie / Stanza / Sunny
VKPC 92405	**NISSAN** Prairie / Bluebird
VKPC 92406	**NISSAN** Sunny
VKPC 92408	**NISSAN** Almera / Sunny / NX Coupé / Prairie / Primera / Serena
VKPC 92412	**NISSAN** Almera / Sunny / NX Coupé / Prairie / Primera / Serena
VKPC 92420	**NISSAN** Cherry Diesel / Sunny Diesel
VKPC 92422	**NISSAN** Stanza Turbo Diesel / Sunny Diesel

www.bergab.ru Берг АБ bergab@ya.ru Тел. (495)-228-06-21, факс (495) 223-3071

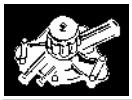

VKPC 92600	**NISSAN** Trade Diesel / Vanette Diesel
VKPC 92601	**NISSAN** Silvia / SX Coupé / Bluebird / Violet Turbo Diesel / Laurel / Cedric
VKPC 92610	**NISSAN** Bluebird Diesel & Turbo Diesel / Vanette Diesel
VKPC 92615	**NISSAN** Bluebird Diesel & Turbo Diesel / Stanza
VKPC 92630	**NISSAN** Bluebird / Pickup / Terrano / Violet
VKPC 92634	**NISSAN** Urvan / Vanette
VKPC 92645	**NISSAN** Pickup / Terrano II
VKPC 92648	**NISSAN** Pickup
VKPC 92649	**NISSAN** Pickup Diesel
VKPC 92650	**NISSAN** Pickup Diesel
VKPC 92651	**NISSAN** Pickup Turbo Diesel
VKPC 92800	**NISSAN** Patrol
VKPC 92802	**NISSAN** Laurel / Patrol / Urvan / Vanette / 280 SX
VKPC 92810	**NISSAN** Patrol Turbo Diesel
VKPC 92820	**NISSAN** Patrol Diesel & Turbo Diesel
VKPC 92821	**NISSAN** Maxima
VKPC 92822	**NISSAN** Maxima
VKPC 92823	**NISSAN** Terrano I
VKPC 92827	**NISSAN** Trade Diesel
VKPC 92926	**NISSAN** Cargo Diesel / Serena Diesel / Trade Diesel / Vanette Diesel
VKPC 93205	**HONDA** Civic / Coupe CRX / Quint / Integra / Prelude
	ROVER 213
VKPC 93207	**HONDA** Civic
	ROVER Triumph

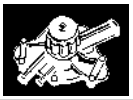

VKPC 93210	**HONDA** Civic / Ballade
VKPC 93405	**HONDA** Accord / Civic / Integra / Prelude / Quint
VKPC 93409	**HONDA** Prelude / Accord
VKPC 93410	**HONDA** Prelude / Accord
VKPC 93411	**HONDA** Civic / CRX
VKPC 93413	**HONDA** Coupé CRX / Quint / Integra
VKPC 93415	**HONDA** Civic / Integra
VKPC 93600	**HONDA** Accord / Prelude
VKPC 93601	**HONDA** Accord / Civic / Coupé CRX / Prelude / Shuttle
	ROVER 618 / 620
VKPC 93602	**HONDA** Prelude
VKPC 94002	**KIA** Pride / Sephia / Mentor
	MAZDA 121 / 323 / MX-3
VKPC 94202	**MAZDA** 323
VKPC 94422	**MAZDA** 626 / 929 / Bongo
VKPC 94423	**MAZDA** 626 / 929 / Bongo / B series
VKPC 94424	**MAZDA** 626 / 929 / Bongo / B series / E series
	KIA Sportage
VKPC 94425	**MAZDA** 626 / B series
	KIA Sportage
VKPC 94434	**MAZDA** 323 / MX-5
VKPC 94452	**MAZDA** 626 Diesel
VKPC 94602	**FORD** Probe
	MAZDA 626 / MX-3 / MX-6 / Xedos 6
VKPC 94603	**FORD** Probe

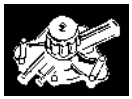

	MAZDA 323 / 626 / MX-3 / MX-6 / Xedos 6 / Xedos 9
VKPC 94612	**MAZDA** 929
VKPC 95002	**HYUNDAI** Pony / Stellar
VKPC 95004	**MITSUBISHI** Celeste / Lancer / Galant / Sapporo / L 200 / L300 Delica / Forte / Pickup / Sigma
VKPC 95008	**HYUNDAI** Excel / Pony / Lantra / Scoupe
	MITSUBISHI Colt / Lancer
	PROTON Persona / Proton
VKPC 95010	**MITSUBISHI** Colt / Lancer / Cordia / Tredia / Galant / Sigma / Sapporo / Space Wagon
VKPC 95402	**MITSUBISHI** Colt Diesel / Lancer Diesel / Galant Diesel / Sigma Diesel / Sapporo Diesel / Space Wagon Diesel
VKPC 95404	**MITSUBISHI** Colt Diesel / Lancer Diesel / Galant Diesel
VKPC 95405	**MITSUBISHI** Pajero Diesel / L300 Delica Diesel
VKPC 95420	**HYUNDAI** Stellar
VKPC 95422	**HYUNDAI** Sonata
	MITSUBISHI Galant / Sigma / Sapporo / Pajero / L300 Delica / Forte
VKPC 95423	**MITSUBISHI** Chariot / Galant / Space Wagon
VKPC 95424	**HYUNDAI** Lantra / Sonata
	MITSUBISHI Colt / Lancer / Galant / Eclipse
VKPC 95426	**MITSUBISHI** Lancer / Space Wagon
	PROTON Persona / Proton
VKPC 95427	**HYUNDAI** Lantra
	MITSUBISHI Colt / Lancer

www.bergab.ru Берг АБ bergab@ya.ru Тел. (495)-228-06-21, факс (495) 223-3071

VKPC 95602	**MAZDA** B series
	MITSUBISHI Celeste / Forte / Galant / Sapporo / Sigma / Pajero / L200 / Pickup
VKPC 95610	**HYUNDAI** Sonata
	MITSUBISHI Pajero / Shogun
VKPC 95611	**HYUNDAI** Sonata
	MITSUBISHI Space Wagon
VKPC 95612	**MITSUBISHI** Space Wagon
VKPC 95614	**MITSUBISHI** Lancer Diesel / Space Wagon Diesel
	PROTON Persona Diesel & Turbo Diesel
VKPC 95800	**MITSUBISHI** Pajero Diesel
VKPC 96204	**BEDFORD** Rascal
	SUZUKI Mighty-Boy / Alto / Swift / Super Carry / Jimny / Samurai / SJ-413
VKPC 96210	**SUBARU** Justy
	SUZUKI Swift
VKPC 96212	**SUZUKI** Samaurai / Swift / SJ-413
VKPC 96402	**SUZUKI** Baleno / Swift / Vitara
VKPC 97000	**DAIHATSU** Daihatsu Charade
VKPC 97001	**DAIHATSU** Daihatsu Charade
VKPC 97200	**DAIHATSU** Applause / Charade / Grand Move
VKPC 97201	**DAIHATSU** Feroza / Sportrak / Terios
VKPC 98000	**ISUZU** Aska / Bighorn / Faster Rodeo / Florian / Trooper / 117 Coupé
VKPC 99403	**SUBARU** Leone
VKPC 99404	**SUBARU** Leone
VKPC 99405	**SUBARU** L Series
VKPC 99406	**SUBARU** L Series
VKPC 99407	**SUBARU** Impreza / Legacy

www.bergab.ru Берг АБ bergab@ya.ru Тел. (495)-228-06-21, факс (495) 223-3071

Смотрите следующую страницу..

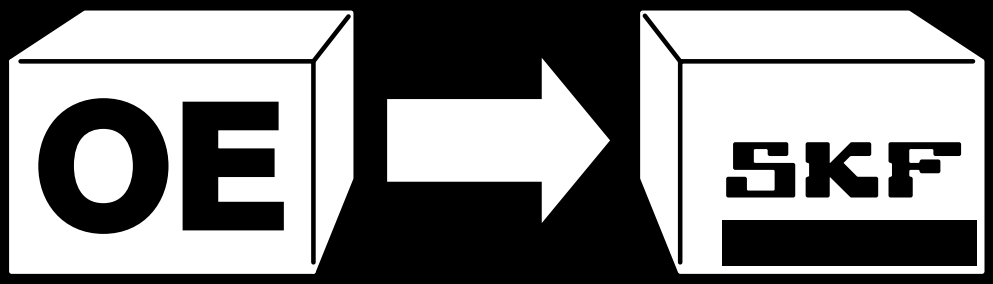

ALFA ROMEO 186
AUDI 186
BMW 186
BEDFORD 187
CHRYSLER 187
CITROEN 187
DAEWOO 187
FIAT 187
FORD 189
HONDA. 189
HYUNDAI 189
ISUZU. 190
IVECO. 190
KIA 190
LADA 190
LANCIA. 190
MAZDA. 190
MERCEDES BENZ 190
MITSUBISHI 101
NISSAN 191
OPEL 192
PEUGEOT. 192
PORSCHE 193
PROTON 193
RENAULT 193
ROVER 193
SAAB 194
SEAT 194
SKODA 194
SMART 194
SUBARU. 194
SUZUKI 194
TALBOT 195
TOYOTA 195
VAUXHALL 195
VOLKSWAGEN. 195
VOLVO 196
ZASTAVA/YUGO 196

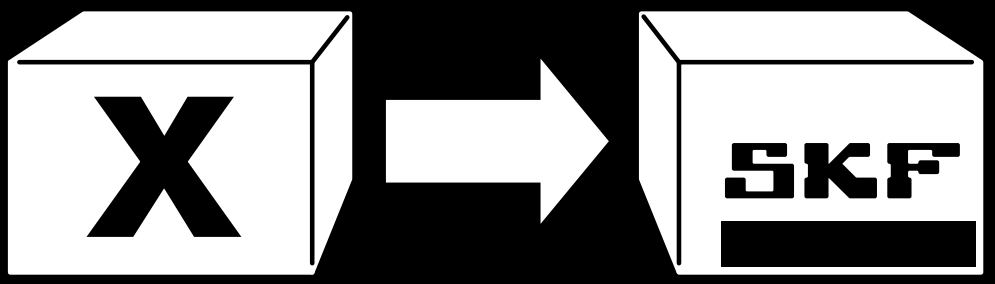

AIRTEX 197
AQUAPLUS (TEMOT) 198
BUGATTI 200
DELPHI (A P LOCKHEED) 203
DOLZ 205
GRAF 207
LAI 210
QH 212
RUVILLE 215
SALERI 217
VALEO 219

OE → SKF

ALFA ROMEO

OE	SKF
113050702400	VKPC 82621
113050702401	VKPC 82621
116460702400	VKPC 82633
116610702400	VKPC 82623
117010702400	VKPC 82621
117020702402	VKPC 82623
119000702402	VKPC 82633
162060702401	VKPC 82635
162060702402	VKPC 82635
195150702400	VKPC 82633
195150702401	VKPC 82633
195320702402	VKPC 82800
195360702400	VKPC 82621
195510702400	VKPC 82632
195510702401	VKPC 82632
195590702400	VKPC 82636
46432248	VKPC 82665
46435858	VKPA 82666
46515970	VKPC 82665
46515972	VKPC 82665
4714636	VKPC 82630
4754850	VKPC 82630
4764761	VKPC 82630
510485	VKPC 82200
532912	VKPC 82201
546329	VKPC 82423
5973319	VKPC 82614
60504407	VKPC 82201
60513151	VKPC 82800
60513470	VKPC 82632
60513608	VKPC 82636
60518083	VKPC 82621
60523035	VKPC 82621
60533507	VKPC 82623
60533508	VKPC 82635
60533509	VKPC 82635
60534334	VKPC 82633
60534335	VKPC 82633
60534336	VKPC 82633
60534758	VKPC 82621
60536055	VKPC 82201
60537381	VKPC 82423
60555345	VKPC 82633
60555347	VKPC 82800
60555348	VKPC 82800
60555999	VKPC 82636
60558613	VKPC 82423
60561800	VKPC 82800
60561806	VKPC 82635
60562567	VKPC 82642
60562571	VKPC 82642
60563626	VKPC 82621
60564004	VKPC 82642
60564048	VKPC 82800
60565229	VKPC 82632
60565727	VKPC 82201
60585358	VKPC 82436
60585362	VKPC 82436
60586222	VKPC 82645
60586467	VKPC 82201
60597487	VKPC 82436
60608898	VKPC 82451
60611459	VKPC 82201
60614390	VKPC 82201
60622295	VKPC 82201
60700439	VKPC 82633
60703264	VKPC 82633
60704056	VKPC 82623
60732127	VKPC 82623
60733346	VKPC 82621
60743945	VKPC 82632
60744120	VKPC 82200
60800169	VKPC 82614
60808756	VKPA 82618
60809209	VKPC 82660
60810426	VKPC 82660
60811328	VKPC 82645
60812262	VKPA 82618
60812263	VKPA 82666
60814609	VKPC 82665
71713045	VKPC 82800
7303009	VKPC 82630
7303030	VKPC 82600
7629033	VKPC 82618
7708187	VKPC 82660
7710471	VKPA 82666
7747382	VKPC 82660
7747388	VKPC 82660
7762925	VKPC 82665

AUDI

OE	SKF
026 121 004 V	VKPC 81615
026 121 004 X	VKPC 81615
026 121 005 A	VKPC 81401
026 121 005 C	VKPC 81401
026 121 005 E	VKPC 81401
026 121 005 F	VKPC 81402
026 121 005 FV	VKPC 81402
026 121 005 FX	VKPC 81402
026 121 005 G	VKPC 81401
026 121 005 H	VKPC 81401
026 121 005 K	VKPC 81402
026 121 010	VKPA 81401
026 121 010 A	VKPA 81400
026 121 010 AV	VKPA 81400
026 121 010 C	VKPA 81401
026 121 010 CV	VKPA 81401
026 121 010 CX	VKPA 81401
026 121 010 D	VKPA 81400
026 121 010 DV	VKPA 81400
026 121 010 DX	VKPA 81400
026 121 010 F	VKPC 81402
026 121 010 FV	VKPC 81402
026 121 010 FX	VKPC 81402
026 121 010 V	VKPA 81401
026 121 010 X	VKPA 81401
028 121 004	VKPC 81615
028 121 004 V	VKPC 81615
028 121 004 X	VKPC 81615
034 121 004	VKPC 81606
034 121 004 V	VKPC 81606
034 121 004 X	VKPC 81606
034 121 005 D	VKPC 81606
035 121 004	VKPC 81606
035 121 004 A	VKPC 81605
035 121 004 AV	VKPC 81605
035 121 004 AX	VKPC 81605
035 121 005 AV	VKPC 81605
035 121 005 AX	VKPC 81605
035 121 005 B	VKPC 81605
035 121 005 C	VKPC 81605
035 121 005 E	VKPC 81605
036 121 005 B	VKPC 81407
036 121 005 E	VKPC 81407
036 121 005 EV	VKPC 81407
036 121 005 EX	VKPC 81407
036 121 005 F	VKPC 81419
036 121 005 J	VKPC 81419
036 121 005 P	VKPC 81419
037 121 005 B	VKPC 81401
037 121 010	VKPA 81401
037 121 010 A	VKPA 81401
037 121 010 B	VKPA 81401
038 121 011	VKPC 81621
038 121 011 A	VKPC 81623
038 121 011 AV	VKPC 81623
038 121 011 AX	VKPC 81623
038 121 011 C	VKPC 81626
038 121 011 D	VKPC 81626
045 121 011 B	VKPC 81417
045 121 011 C	VKPC 81416
046 121 004	VKPC 81603
046 121 004 D	VKPC 81805
046 121 004 DV	VKPC 81805
046 121 004 DX	VKPC 81805
046 121 004 V	VKPC 81603
046 121 004 X	VKPC 81603
047 121 011 B	VKPC 81412
048 121 011	VKPC 81601
050 121 010 A	VKPA 81402
050 121 010 AV	VKPA 81402
050 121 010 AX	VKPA 81402
052 121 004	VKPC 81200
052 121 004 V	VKPC 81200
052 121 004 X	VKPC 81200
052 121 005	VKPC 81200
052 121 005 A	VKPC 81200
052 121 019	VKPC 81200
054 121 004 A	VKPC 81612
054 121 004 AV	VKPC 81612
054 121 004 AX	VKPC 81612
055 121 010	VKPA 81400
055 121 010 X	VKPA 81400
056 121 005 A	VKPC 81400
056 121 011	VKPA 81400
056 121 013 A	VKPA 81400
059 121 004 B	VKPC 81625
059 121 004 C	VKPC 81625
059 121 004 D	VKPC 81625
059 121 004 E	VKPC 81625
060 121 010 X	VKPC 81601
060 121 011	VKPC 81601
068 121 005	VKPC 81400
068 121 005 A	VKPC 81401
068 121 005 B	VKPC 81400
068 121 005 C	VKPC 81400
068 121 005 X	VKPC 81400
068 121 010	VKPA 81400
068 121 010 A	VKPA 81401
068 121 010 AX	VKPA 81401
069 121 004 V	VKPC 81602
069 121 004 X	VKPC 81602
069 121 005 D	VKPC 81602
06A 121 011 E	VKPC 81620
06A 121 011 EV	VKPC 81620
06A 121 011 EX	VKPC 81620
06A 121 011 FV	VKPC 81620
06A 121 011 L	VKPC 81620
06A 121 011 LV	VKPC 81620
06A 121 011 LX	VKPC 81620
06B 121 011 B	VKPC 81408
06B 121 011 BV	VKPC 81408
06B 121 011 BX	VKPC 81408
06B 121 011 E	VKPC 81408
06B 121 011 EV	VKPC 81408
06B 121 011 EX	VKPC 81408
074 121 004	VKPC 86619
074 121 004 V	VKPC 86619
074 121 004 X	VKPC 86619
077 121 004 A	VKPC 81806
077 121 004 F	VKPC 81807
077 121 004 FV	VKPC 81807
077 121 004 FX	VKPC 81807
077 121 004 G	VKPC 81806
077 121 004 GX	VKPC 81806
077 121 004 H	VKPC 81807
077 121 005 N	VKPC 86619
077 121 005 NX	VKPC 86619
078 121 004 B	VKPC 81800
078 121 004 BV	VKPC 81800
078 121 004 BX	VKPC 81800
078 121 004 C	VKPC 81800
078 121 004 CV	VKPC 81800
078 121 004 CX	VKPC 81800
078 121 004 H	VKPC 81802
078 121 004 HV	VKPC 81802
078 121 004 HX	VKPC 81802
078 121 004 J	VKPC 81802
078 121 004 JV	VKPC 81802
078 121 004 JX	VKPC 81802
078 121 004 L	VKPC 81811
078 121 004 Q	VKPC 81802
078 121 004 QX	VKPC 81802
078 121 004 R	VKPC 81811

B.M.W.

OE	SKF
11 51 0 686 001	VKPC 88600
11 51 0 686 901	VKPC 88600
11 51 1 242 675	VKPC 88614
11 51 1 256 600	VKPC 88600
11 51 1 258 933	VKPC 88609
11 51 1 259 660	VKPC 88609
11 51 1 267 187	VKPC 88603
11 51 1 267 583	VKPC 88603
11 51 1 271 435	VKPC 88605
11 51 1 284 247	VKPC 88614
11 51 1 286 355	VKPC 88610
11 51 1 286 358	VKPC 88610

www.bergab.ru Берг АБ bergab@ya.ru Тел. (495)-228-06-21, факс (495) 223-3071

OE	SKF
11 51 1 286 417	VKPC 88802
11 51 1 433 712	VKPC 88617
11 51 1 433 828	VKPC 88617
11 51 1 706 564	VKPC 88605
11 51 1 706 588	VKPC 88605
11 51 1 707 190	VKPC 88802
11 51 1 707 191	VKPC 88802
11 51 1 707 192	VKPC 88802
11 51 1 711 492	VKPC 88605
11 51 1 715 292	VKPC 88611
11 51 1 719 836	VKPC 88607
11 51 1 720 609	VKPC 88607
11 51 1 720 881	VKPC 88802
11 51 1 720 883	VKPC 88802
11 51 1 720 892	VKPC 88802
11 51 1 720 893	VKPC 88802
11 51 1 721 337	VKPC 88611
11 51 1 721 477	VKPC 88610
11 51 1 721 872	VKPC 88615
11 51 1 722 536	VKPC 88617
11 51 1 727 123	VKPC 88616
11 51 1 730 414	VKPC 88617
11 51 1 731 680	VKPC 88831
11 51 1 734 269	VKPC 88616
11 51 1 734 595	VKPC 88615
11 51 1 734 602	VKPC 88615
11 51 1 736 146	VKPC 88831
11 51 1 736 203	VKPC 88830
11 51 1 740 241	VKPC 88617
11 51 1 741 001	VKPC 88831
11 51 1 741 002	VKPC 88830
11 51 1 742 498	VKPC 88831
11 51 1 742 517	VKPC 88830
11 51 1 742 647	VKPC 88829
11 51 1 744 243	VKPC 88617
11 51 2 241 641	VKPC 88614
11 51 2 242 176	VKPC 88612
11 51 2 242 675	VKPC 88614
11 51 2 242 677	VKPC 88612
11 51 2 243 003	VKPC 88826
11 51 2 244 333	VKPC 88826
11 51 2 245 687	VKPC 88826
11 51 9 058 996	VKPC 88605
11 51 9 061 160	VKPC 88802
11 51 9 068 606	VKPC 88826
11 51 9 069 529	VKPC 88826

BEDFORD

OE	SKF
13.34.004	VKPC 85202
13.34.006	VKPC 85600
13.34.006	VKPA 85609
13.34.008	VKPC 85407
13.34.009	VKPC 85603
13.34.011	VKPC 85401
13.34.012	VKPC 85406
13.34.013	VKPC 85400
13.34.014	VKPC 85408
13.34.015	VKPC 85406
13.34.016	VKPC 85403
13.34.017	VKPC 85610
13.34.021	VKPC 85603
13.34.023	VKPC 85202
13.34.024	VKPC 85401
13.34.025	VKPC 85206
13.34.029	VKPC 85200
13.34.045	VKPA 85605
13.34.058	VKPC 85203
13.34.070	VKPC 85202
13.34.071	VKPC 85201
13.34.074	VKPA 85605
13.34.081	VKPC 85600
13.34.084	VKPC 85400
13.34.087	VKPA 85605
13.34.090	VKPC 85600
13.34.091	VKPC 85600
13.34.093	VKPC 85600
13.34.096	VKPC 85600
13.34.097	VKPA 85608
13.34.098	VKPC 85206
13.34.099	VKPC 85406
2866233	VKPC 85200
3469874	VKPA 85605
90076952	VKPC 85202
90091035	VKPC 85201
90096415	VKPA 85605
90106450	VKPC 85406
90106656	VKPC 85400
90124093	VKPC 85403
90136224	VKPC 85600
90136377	VKPC 85600
90136377	VKPA 85605
90136382	VKPA 85605
90144227	VKPC 85206
90156428	VKPC 85600
90156532	VKPA 85608
90220568	VKPC 85407
90234200	VKPC 85401
90271492	VKPC 85603
90281612	VKPC 85610
90284802	VKPC 85400
90284913	VKPC 85408
90285418	VKPC 85406
90324217	VKPC 85603
90325659	VKPC 85202
90325660	VKPC 85206
90325661	VKPC 85401
90348231	VKPC 85603
91118465	VKPC 96204
9292375	VKPC 85203

CHRYSLER

OE	SKF
4720429	VKPC 82642

CITROEN

OE	SKF
1201.55	VKPC 83425
1201.58	VKPC 83428
1201.61	VKPC 83615
1201.70	VKPC 83810
1201.91	VKPC 83420
1201.93	VKPC 83636
1201.95	VKPA 83431
1201.96	VKPA 83432
1201.98	VKPC 83635
1201.A1	VKPC 83636
1201.A2	VKPC 83430
1201.A3	VKPC 83810
1201.A5	VKPC 83811
1201.A6	VKPC 83637
1201.A8	VKPC 83420
1201.C4	VKPC 83639
1201.C7	VKPC 83637
1201.E3	VKPC 83205
1201.E4	VKPC 83428
1201.E5	VKPC 83430
1201.E6	VKPC 83428
1207.23	VKPC 83205
1207.25	VKPC 83428
75522430	VKPC 83607
75530147	VKPC 83617
7701556717	VKPC 83626
7901120258	VKPC 83200
7946002102	VKPC 83626
9401201480	VKPC 83424
9451001263	VKPC 83205
95542321	VKPC 83627
95542322	VKPC 83627
95548541	VKPC 83617
95575455	VKPC 83607
95619748	VKPC 83617
95625017	VKPC 83615
95641148	VKPC 83401
95642321	VKPC 83627
95642322	VKPC 83627
95643824	VKPC 83424
95655207	VKPC 83401
95655208	VKPC 83615
95655210	VKPC 83424
95656566	VKPC 83401
95656567	VKPC 83615
95656568	VKPC 83424
95656569	VKPC 83424
95666768	VKPC 83420
96047088	VKPC 83425
9608564280	VKPC 83428
9617376980	VKPC 83205
96650955	VKPC 83420
97521368	VKPC 83206

DAEWOO

OE	SKF
94013802	VKPC 90200
96352648	VKPC 90202
96352649	VKPC 90200
5094013802	VKPC 90200
90220568	VKPC 85407
90284802	VKPC 85400
90325660-A	VKPC 85206
90466343	VKPC 85611
92064250	VKPC 85611
96182871	VKPC 90402
96350799	VKPC 90202
96351284	VKPC 90200
96351969	VKPC 85206
96351971	VKPC 90200
96352650	VKPC 90402

DAIHATSU

OE	SKF
16100-19015	VKPC 91402
16100-87108	VKPC 97200
16100-87109	VKPC 97201
16100-87182	VKPC 97200
16100-87183	VKPC 97201
16100-87184	VKPC 97200
16100-87185	VKPC 97201
16100-87786	VKPC 97000
16100-87787	VKPC 87203
16100-87790	VKPC 97001
16100-87795	VKPC 97000
16100-87796	VKPC 87203
16100-87797	VKPC 97001

FIAT

OE	SKF
7762986	VKPA 82248
46409200	VKPA 83432
46409201	VKPA 83431
46437913	VKPA 83432
46437914	VKPA 83431
1304596080	VKPA 82670
1313021080	VKPA 82671
1317462080	VKPA 82670
1317466080	VKPA 82671
4065269	VKPC 82205
4129810	VKPC 82404
4243679	VKPA 82202
4296890	VKPA 82202
4297101	VKPC 82206
4297101	VKPA 82206
4320086	VKPC 82404
4331825	VKPC 82412
4336009	VKPC 82208
4336188	VKPC 82404
4364117	VKPC 82410
4364117	VKPA 82410
4384128	VKPC 82206
4384128	VKPA 82206
4384129	VKPA 82202
4408201	VKPC 82206
4408201	VKPA 82222
4408285	VKPC 82216
4429224	VKPC 82216
4458134	VKPC 82424
4466193	VKPC 82416
46139910	VKPC 82629
46400058	VKPC 82441
46407762	VKPA 82666
46407766	VKPA 82429
46409136	VKPA 82210
46409136	VKPC 82210
46410549	VKPA 82230
46410551	VKPA 82240
46412338	VKPA 82440
46422512	VKPC 82249
46423351	VKPC 82214
46435858	VKPA 82666
46437911	VKPC 82246
46437911	VKPA 82246
46437912	VKPA 82230

www.bergab.ru Берг АБ bergab@ya.ru Тел. (495)-228-06-21, факс (495) 223-3071

OE	SKF
46437912	VKPC 82230
46437916	VKPA 82230
46437916	VKPC 82230
46444355	VKPC 82441
46445405	VKPA 82653
46515970	VKPC 82665
46515971	VKPC 82247
46515972	VKPC 82665
46520401	VKPC 82249
46526243	VKPC 82250
46531183	VKPC 82214
46541092	VKPA 82441
46742168	VKPA 82202
4720031	VKPC 82606
4755003	VKPC 82606
4764782	VKPC 82606
4822231	VKPC 82616
4823810	VKPC 82643
4829216	VKPC 82616
5416786	VKPC 83607
5548541	VKPC 83617
5882684	VKPC 82404
5882685	VKPC 82204
5882689	VKPC 82412
5882695	VKPC 82206
5882695	VKPA 82206
5882838	VKPC 82413
5883960	VKPC 82206
5883960	VKPA 82206
5890406	VKPC 82208
5893336	VKPC 82206
5893336	VKPA 82222
5893338	VKPC 82218
5893338	VKPA 82218
5893339	VKPA 82206
5893340	VKPC 82224
5893340	VKPA 82224
5894047	VKPA 82410
5894047	VKPC 82410
5894128	VKPC 82434
5894129	VKPC 82206
5894129	VKPA 82222
5894394	VKPC 82622
5894582	VKPC 82218
5894582	VKPA 82218
5894583	VKPC 82224
5894583	VKPA 82224
5896813	VKPA 82620
5896820	VKPA 82618
5896821	VKPA 82618
5896822	VKPA 82618
5924366	VKPC 82216
5936404	VKPC 82206
5936404	VKPA 82222
5939200	VKPA 82202
5954048	VKPC 82418
5960469	VKPC 82206
5960469	VKPA 82222
5964284	VKPC 82413
5973319	VKPC 82614
5973713	VKPC 82214
5975025	VKPC 82418
5983960	VKPC 82206

OE	SKF
5983960	VKPA 82206
5984047	VKPC 82410
5984047	VKPA 82410
5990406	VKPC 82208
5990701	VKPC 82216
5990985	VKPC 82604
5992593	VKPC 82206
5992593	VKPA 82222
5993339	VKPC 82206
5993339	VKPA 82206
5996594	VKPC 82218
5996705	VKPC 82413
5999790	VKPC 82622
60608898	VKPC 82451
60808116	VKPC 82800
60809209	VKPC 82660
60810426	VKPC 82660
60811328	VKPC 82645
60812263	VKPA 82666
60814609	VKPC 82665
71713727	VKPC 82214
7301300	VKPC 82600
7301593	VKPC 82600
7302443	VKPC 82600
7302554	VKPC 82616
7303030	VKPC 82600
7303050	VKPC 82606
7392549	VKPA 82429
7533220	VKPC 82604
7533502	VKPC 82218
7533502	VKPA 82218
7540918	VKPC 82608
7540918	VKPA 82608
7540964	VKPC 82420
7553396	VKPC 82426
7553396	VKPA 82426
7553921	VKPC 82608
7553921	VKPA 82608
7555039	VKPC 82429
7555039	VKPA 82429
7565764	VKPC 82218
7565764	VKPA 82218
7574887	VKPC 82424
7575827	VKPC 82428
7575827	VKPA 82428
7580613	VKPC 82218
7580613	VKPA 82218
7580753	VKPC 82206
7580753	VKPA 82222
7580754	VKPC 82218
7580754	VKPA 82218
7580755	VKPC 82218
7580755	VKPA 82218
7580756	VKPC 82206
7580756	VKPA 82222
7589065	VKPC 82432
7589767	VKPC 82604
7589770	VKPC 82604
7589771	VKPC 82608
7589771	VKPA 82608
7589773	VKPC 82608
7589773	VKPA 82608
7597569	VKPA 82620

OE	SKF
7608844	VKPA 82210
7608844	VKPC 82210
7609204	VKPC 82629
7611321	VKPC 82608
7611321	VKPA 82608
7611322	VKPC 82608
7611322	VKPA 82608
7613881	VKPC 82608
7613881	VKPA 82608
7617168	VKPC 82431
7617168	VKPA 82431
7617364	VKPA 82220
7626604	VKPC 82429
7626604	VKPA 82429
7629033	VKPC 82618
7629033	VKPA 82618
7629228	VKPC 82429
7629228	VKPA 82429
7630343	VKPC 82224
7630343	VKPA 82224
7631379	VKPC 82618
7631379	VKPA 82618
7631494	VKPA 82620
7633470	VKPA 82440
7633560	VKPC 82216
7635148	VKPC 82434
7635180	VKPC 82622
7640163	VKPC 82214
7648451	VKPC 82429
7648451	VKPA 82429
7651586	VKPC 82431
7651586	VKPA 82431
7653408	VKPC 82224
7653408	VKPA 82224
7658062	VKPC 82608
7658062	VKPA 82608
7658606	VKPC 82620
7658606	VKPA 82620
7658607	VKPA 82620
7661811	VKPC 82629
7661813	VKPC 82622
7671810	VKPC 82216
7671811	VKPC 82216
7691044	VKPA 82218
7691045	VKPC 82206
7691045	VKPA 82222
7691046	VKPC 82431
7691047	VKPC 82431
7691820	VKPC 82214
7692278	VKPC 82429
7692278	VKPA 82429
7692285	VKPA 82620
7692294	VKPC 82618
7692294	VKPA 82618
7692549	VKPA 82666
7692551	VKPA 82634
7692552	VKPA 82666
7692554	VKPC 82428
7692554	VKPA 82428
7692555	VKPC 82429
7692555	VKPA 82429
7693569	VKPA 82620
7693570	VKPC 82618

OE	SKF
7693570	VKPA 82618
7693966	VKPA 82210
7693966	VKPC 82210
7694229	VKPC 82622
7694408	VKPA 82618
7694426	VKPC 82618
7694426	VKPA 82618
7695557	VKPC 82622
7695559	VKPC 82629
7696083	VKPA 82440
7696226	VKPC 82618
7696226	VKPA 82618
7701137	VKPC 82647
7703893	VKPC 82432
7708187	VKPC 82660
7710471	VKPA 82666
7715051	VKPC 82429
7715051	VKPA 82429
7715242	VKPC 82214
7719918	VKPC 82224
7719918	VKPA 82224
7719919	VKPC 82206
7719919	VKPA 82222
7719921	VKPC 82218
7719921	VKPA 82218
7720987	VKPC 82245
7720988	VKPA 82240
7723345	VKPC 82431
7724414	VKPA 82202
7737200	VKPC 82245
7737201	VKPA 82240
7737257	VKPC 82224
7737257	VKPA 82224
7738267	VKPC 82431
7738267	VKPA 82431
7747382	VKPC 82660
7747386	VKPC 82629
7747388	VKPC 82660
7748000	VKPC 82206
7748000	VKPA 82222
7748002	VKPC 82431
7748002	VKPA 82431
7750698	VKPA 82230
7750698	VKPC 82230
7752928	VKPC 82246
7752928	VKPA 82246
7762924	VKPC 82437
7762925	VKPC 82665
7762926	VKPC 82646
7770033	VKPC 82224
7770033	VKPA 82224
7770034	VKPC 82245
7770042	VKPC 82431
7771811	VKPC 82245
7781232	VKPA 82653
7783006	VKPC 82647
7783009	VKPC 82622
7784975	VKPC 82224
7784975	VKPA 82224
7784976	VKPC 82431
7784977	VKPC 82245
7784978	VKPC 82206
7784978	VKPA 82222

www.bergab.ru Берг АБ bergab@ya.ru Тел. (495)-228-06-21, факс (495) 223-3071

OE	SKF
7784979	VKPC 82431
7784979	VKPA 82431
7784981	VKPC 82218
7784981	VKPA 82218
7784982	VKPC 82431
7784982	VKPA 82431
7784987	VKPC 82450
7893966	VKPA 82210
7893966	VKPC 82210
9401201340	VKPC 83630
9401201400	VKPC 83630
9565095580	VKPC 83420
9565656788	VKPC 83615
9566945680	VKPC 83420
9566945688	VKPC 83420
9566950080	VKPC 83636
9567521488	VKPC 83420
9569147388	VKPC 83639
9569623880	VKPC 83425
9604708880	VKPC 83425
9627667988	VKPC 83420
9629110980	VKPC 83425
98430541	VKPA 82648
98435125	VKPC 82638
98435994	VKPC 82606
98459757	VKPC 82606
98459759	VKPC 82643
98459763	VKPC 82600
98473452	VKPC 82652
99440717	VKPC 82652
99440930	VKPC 82638

FORD

OE	SKF
1078500	VKPC 84416
1079085	VKPC 84416
1104115	VKPC 84416
1141483	VKPC 84416
1001889	VKPC 81611
1002789	VKPC 81401
1007714	VKPC 84215
1020538	VKPC 84215
1020567	VKPC 84216
1020988	VKPC 84620
1023645	VKPC 84620
1025656	VKPC 84405
1031279	VKPC 84409
1031879	VKPC 81401
1036188	VKPA 81401
1053054	VKPC 84410
1053055	VKPC 84208
1058743	VKPC 84415
1059843	VKPC 81611
1094596	VKPC 84415
1100635	VKPC 81623
1651816	VKPC 84411
3382081	VKPC 94603
5004976	VKPC 83616
5004977	VKPC 83616
5004988	VKPC 84603
5004998	VKPC 84202
5005004	VKPC 84200
5005036	VKPC 84400
5005054	VKPC 84201
5005058	VKPC 84600
5005193	VKPC 84606
5005197	VKPC 84205
5005916	VKPC 84616
5006046	VKPC 84601
5006210	VKPC 84206
5007851	VKPC 84608
5007852	VKPC 84607
5008470	VKPC 84207
5009823	VKPC 83423
5010875	VKPC 84600
5010876	VKPC 84600
5010878	VKPC 84601
5010880	VKPC 84600
5011012	VKPC 84617
5011013	VKPC 84403
5011846	VKPC 84609
5011863	VKPC 84601
5011864	VKPC 84600
5012322	VKPC 84403
5012359	VKPC 84601
5012434	VKPC 84405
5012773	VKPC 84618
5013267	VKPC 84600
5013268	VKPC 84601
5013274	VKPC 84601
5018437	VKPC 84207
5018852	VKPC 84207
5019394	VKPC 83604
5020121	VKPC 84610
5020242	VKPC 84620
5020424	VKPC 84603
5020425	VKPC 84202
5020437	VKPC 84209
5020651	VKPC 84208
5020713	VKPC 84410
5020716	VKPC 84200
5020717	VKPC 84201
5020823	VKPC 84616
5023817	VKPC 84403
5024297	VKPC 84409
5024545	VKPC 84618
5024546	VKPC 84617
5024603	VKPC 84205
5024638	VKPC 83423
5025607	VKPC 84406
5025832	VKPC 84608
5025908	VKPC 84209
5026076	VKPC 84609
5026783	VKPC 84209
5028472	VKPC 84408
6050034	VKPC 84205
6050907	VKPC 84205
6092759	VKPC 84206
6189520	VKPC 84412
6457409	VKPC 84411
6683522	VKPC 84210
6878045	VKPC 84407
7072641	VKPC 82642
7087382	VKPC 84411
7087383	VKPC 84412
88FX 8591 AA	VKPC 84620
88FX 8591 AB	VKPC 84620
88GX 8591 AA	VKPC 83604
91FX 8591 AA	VKPC 84409
91XM 8501 AA	VKPC 84412
96BX 8591 AA	VKPC 84216
96FX 8591 AA	VKPC 84620
96FX 8591 EA	VKPC 84409
96MX 8591 AA	VKPC 84215
988X 8591	VKPC 84415
EPW 1274	VKPC 81611
EPW 14	VKPC 84405
EPW 21	VKPC 83604
EPW 32	VKPC 84603
EPW 40	VKPC 84620
EPW 45	VKPC 83423
EPW 48	VKPC 84616
EPW 52	VKPC 84409
EPW 55	VKPC 84406
EPW 57	VKPC 84608
EPW 60	VKPC 84210
EPW 64	VKPC 84609
EPW 66	VKPC 84601
EPW 70	VKPC 84208
EPW 71	VKPC 84209
EPW 73	VKPC 84410
EPW 74	VKPC 84411
EPW 75	VKPC 84412
EPW 76	VKPC 84407
EPW 79	VKPC 84408
EPW 80	VKPC 84215
EPW 81	VKPC 84216
EPW 82	VKPC 84620
EPW 85	VKPC 84409
EPW 97	VKPC 84610
F32Z-8501A	VKPC 94602
F42Z-8501A	VKPC 94603

HONDA

OE	SKF
19110-654-405	VKPC 93209
19110-657-405	VKPC 93209
19200-657-020	VKPC 93209
19200-657-030	VKPC 93209
19200-P08-003	VKPC 93411
19200-P08-004	VKPC 93411
19200-P08-A01	VKPC 93411
19200-P14-A00	VKPC 87814
19200-P1J-E02	VKPC 87404
19200-P2A-A01	VKPC 93210
19200-P2A-A02	VKPC 93210
19200-P30-003	VKPC 93601
19200-P5T-G00	VKPC 87813
19200-P72-003	VKPC 93415
19200-P72-013	VKPC 93415
19200-P72-A01	VKPC 93415
19200-PA1-000	VKPC 93207
19200-PA1-010	VKPC 93207
19200-PA1-020	VKPC 93207
19200-PA1-030	VKPC 93207
19200-PA1-405	VKPC 93207
19200-PA6-030	VKPC 93405
19200-PC1-000	VKPC 93405
19200-PC1-010	VKPC 93405
19200-PC1-030	VKPC 93405
19200-PC1-080	VKPC 93405
19200-PC1-405	VKPC 93405
19200-PC6-000	VKPC 93409
19200-PD2-000	VKPC 93409
19200-PD2-415	VKPC 93409
19200-PD2-660	VKPC 93409
19200-PD6-000	VKPC 93409
19200-PD6-405	VKPC 93409
19200-PEO-010	VKPC 93205
19200-PEO-415	VKPC 93205
19200-PEO-515	VKPC 93205
19200-PEO-660	VKPC 93205
19200-PG6-000	VKPC 93413
19200-PG6-405	VKPC 93413
19200-PG6-600	VKPC 93413
19200-PH1-000	VKPC 93410
19200-PH1-505	VKPC 93410
19200-PH3-000	VKPC 93600
19200-PH3-505	VKPC 93600
19200-PH7-003	VKPC 87610
19200-PK2-000	VKPC 93602
19200-PK2-505	VKPC 93602
19200-PM3-003	VKPC 87404
19200-PM3-004	VKPC 87404
19200-PM3-013	VKPC 87404
19200-PM3-014	VKPC 87404
19200-PO1-003	VKPC 87404
19200-PO1-004	VKPC 87404
19200-PO8-003	VKPC 93411
19200-PO8-004	VKPC 93411
19200-POA-003	VKPC 93601
19200-POB-A01	VKPC 93601
19200-POG-A01	VKPC 87610
19200-PR3-003	VKPC 93601
19200-PT2-003	VKPC 93601
19200-PTO-003	VKPC 93601
19200-PTO-013	VKPC 93601
19210-PH3-305	VKPC 93600
GWP 344	VKPC 83420

HYUNDAI

OE	SKF
25100-21000	VKPC 95008
25100-22010	VKPC 95008
25100-22012	VKPC 95008
25100-24030	VKPC 95008
25100-24040	VKPC 95008
25100-24060	VKPC 95008
25100-32500	VKPC 95611
25100-32501	VKPC 95611
25100-32502	VKPC 95611
25100-32510	VKPC 95611
25100-32512	VKPC 95611
25100-32515	VKPC 95611
25100-33001	VKPC 95427
25100-33011	VKPC 95427
25100-33012	VKPC 95427
25100-33020	VKPC 95423
25100-33111	VKPC 95424
25100-33120	VKPC 95424
25100-33132	VKPC 95424
25100-35010	VKPC 95610

www.bergab.ru Берг АБ bergab@ya.ru Тел. (495)-228-06-21, факс (495) 223-3071

OE	SKF
25100-35020	**VKPC 95610**
25100-36000	**VKPC 95610**
25100-36010	**VKPC 95610**
25111-29000	**VKPC 83420**
MD 001300	**VKPC 95002**
MD 001313	VKPC 95002
MD 030863	**VKPC 95008**
MD 972052	**VKPC 95424**
MD 997076	**VKPC 95008**
MD 997417	**VKPC 95424**
MD 997418	**VKPC 95427**
MD 997609	**VKPC 95008**
MD 997615	**VKPC 95422**
MD 997620	**VKPC 95427**
MD 997621	**VKPC 95424**

ISUZU

OE	SKF
8-94376-837-0	**VKPC 98000**

IVECO

OE	SKF
4714636	**VKPC 82630**
4754850	**VKPC 82630**
4764761	**VKPC 82630**
500300476	**VKPC 82651**
7303009	**VKPC 82630**
7303050	**VKPC 82606**
7303056	**VKPC 82631**
98435994	**VKPC 82649**
98437726	**VKPC 82650**
98438356	**VKPC 82651**
99440728	**VKPC 82650**
99459757	**VKPC 82649**

KIA

OE	SKF
0FE1H-15-010H	**VKPC 94424**
0FE3N-15-010E	**VKPC 94425**
0K930-15-010A	**VKPC 94002**

LADA

OE	SKF
2101-1307010	**VKPC 88200**
2101-1307010	**VKPA 88200**
2101-4197598	**VKPA 88200**
2101-4197598	**VKPC 88200**
2108.1307.010.00	**VKPC 88203**
4197598	**VKPC 88200**
4197598	**VKPA 88200**

LANCIA

OE	SKF
4336009	**VKPC 82208**
4384129	**VKPA 82202**
4408201	**VKPC 82206**
4408201	**VKPA 82222**
4458134	**VKPC 82424**
46139910	**VKPC 82629**
46410549	**VKPA 82230**
46410551	**VKPA 82240**
46435858	**VKPA 82666**
46437912	**VKPA 82230**
46437912	**VKPC 82230**
46437916	**VKPA 82230**
46437916	**VKPC 82230**
46444355	**VKPC 82441**
46515970	**VKPC 82665**
46526243	**VKPC 82250**
46531183	**VKPC 82214**
46541092	**VKPA 82441**
4822231	**VKPC 82616**
4829216	**VKPC 82616**
5580613	**VKPA 82218**
5580613	**VKPC 82218**
5890406	**VKPC 82208**
5896816	**VKPC 82626**
5896816	VKPA 82626
5936404	**VKPC 82206**
5936404	**VKPA 82222**
5939200	**VKPA 82202**
5955242	**VKPC 82218**
5960469	**VKPC 82206**
5960469	**VKPA 82222**
5973319	**VKPC 82614**
5973713	**VKPC 82214**
5992593	**VKPC 82206**
5992593	**VKPA 82222**
5996594	**VKPC 82218**
5999790	**VKPC 82622**
60809209	**VKPC 82660**
60810426	**VKPC 82660**
60811328	**VKPC 82645**
60812263	**VKPA 82666**
60814609	**VKPC 82665**
7302554	**VKPC 82616**
7533502	**VKPC 82218**
7533502	**VKPA 82218**
7565654	**VKPA 82628**
7565764	**VKPA 82218**
7565764	**VKPC 82218**
7566185	**VKPC 82626**
7566185	**VKPA 82626**
7574887	**VKPC 82424**
7580753	**VKPA 82222**
7580753	**VKPC 82206**
7580754	**VKPA 82218**
7580754	**VKPC 82218**
7580755	**VKPC 82218**
7580755	**VKPA 82218**
7580756	**VKPA 82222**
7580756	**VKPC 82206**
7589777	**VKPA 82628**
7589778	**VKPC 82626**
7589778	**VKPA 82626**
7597577	**VKPC 82208**
7609204	**VKPC 82629**
7615921	**VKPC 82206**
7615921	**VKPA 82222**
7629033	**VKPA 82618**
7629033	**VKPC 82618**
7631379	**VKPA 82618**
7631379	**VKPC 82618**
7635180	**VKPC 82622**
7640163	**VKPC 82214**
7661813	**VKPC 82622**
7671810	**VKPC 82216**
7691044	**VKPC 82218**
7691811	**VKPC 82629**
7694229	**VKPC 82622**
7695557	**VKPC 82622**
7695559	**VKPC 82629**
7701137	**VKPC 82647**
7708187	**VKPC 82660**
7710471	**VKPA 82666**
7715242	**VKPC 82214**
7720987	**VKPC 82245**
7737200	**VKPC 82245**
7747382	**VKPC 82660**
7747386	**VKPC 82629**
7747388	**VKPC 82660**
7750698	**VKPA 82230**
7762924	**VKPC 82437**
7762925	**VKPC 82665**
7762926	**VKPC 82646**
7770034	**VKPC 82245**
7771811	**VKPC 82245**
7783006	**VKPC 82647**
7784977	**VKPC 82245**
7784981	**VKPC 82218**
91107589	**VKPC 82629**
9565095580	**VKPC 83420**
9566945688	**VKPC 83420**
9569147388	**VKPC 83639**
9569623880	**VKPC 83425**
9604708880	**VKPC 83425**
9627667988	**VKPC 83420**
9629110980	**VKPC 83425**
9695557	**VKPC 82622**
99440930	**VKPC 82638**

MAZDA

OE	SKF
1E04-15-010	**VKPC 84216**
1E05-15-010	**VKPC 84215**
1E06-15-010	**VKPC 84215**
1E07-15-010	**VKPC 84620**
8AB1-15-010	**VKPC 94202**
8AB2-15-010	**VKPC 94202**
8AB3-15-010	**VKPC 94002**
8AB4-15-010	**VKPC 94002**
8AB5-15-010	**VKPC 94434**
8AB7-15-010	**VKPC 94002**
8AB8-15-010	**VKPC 94434**
8AD2-15-010A	**VKPC 94002**
8AE2-15-010	**VKPC 94602**
8AG1-15-010B	**VKPC 94423**
8AG2-15-010	**VKPC 94425**
8AG2-15-010B	**VKPC 94425**
8AG2-15-010C	**VKPC 94425**
8AG3-15-010	**VKPC 94422**
8AG6-15-010A	**VKPC 94452**
8AG7-15-010A	**VKPC 94422**
8AH2-15-010	**VKPC 94424**
8AH2-15-010A	**VKPC 94424**
8AH2-15-010B	**VKPC 94424**
8AH3-15-010A	**VKPC 94612**
8AH3-15-010B	**VKPC 94612**
8AH3-15-010C	**VKPC 94612**
8AH3-15-010E	**VKPC 94612**
8AK1-15-010	**VKPC 94424**
8AK2-15-010	**VKPC 94603**
8BU1-15-010	**VKPC 95602**
B630-15-010	**VKPC 94002**
E301-15-010	**VKPC 94202**
E301-15-010A	**VKPC 94202**
E301-15-010B	**VKPC 94202**
E301-15-010C	**VKPC 94202**
E301-15-010D	**VKPC 94202**
E301-15-010F	**VKPC 94202**
E5B6-15-010	**VKPC 94202**
FE79-15-010B	**VKPC 94423**
FE79-15-010C	**VKPC 94423**
R201-15-010A	**VKPC 94452**
R201-15-010B	**VKPC 94452**
RF01-99-154	**VKPC 94452**
RF03-15-010B	**VKPC 94452**
RF95-15-010	**VKPC 94452**

MERCEDES BENZ

OE	SKF
102 200 01 20	**VKPC 88604**
102 200 02 01	**VKPC 88604**
102 200 03 01	**VKPC 88613**
102 200 03 20	**VKPC 88613**
102 200 04 01	**VKPC 88613**
102 200 04 20	**VKPC 88613**
102 200 05 20	**VKPC 88619**
102 200 06 20	**VKPC 88619**
102 200 08 01	**VKPC 88604**
102 200 09 01	**VKPC 88604**
102 200 09 20	**VKPC 88619**
102 200 10 01	**VKPC 88604**
102 200 11 01	**VKPC 88613**
102 200 15 01	**VKPC 88613**
102 200 31 01	**VKPC 88613**
102 200 39 01	**VKPC 88619**
102 200 40 01	**VKPC 88613**
102 200 42 01	**VKPC 88604**
102 200 43 01	**VKPC 88613**
102 200 48 01	**VKPC 88836**
102 200 49 01	**VKPC 88619**
102 200 50 01	**VKPC 88619**
103 200 04 01	**VKPC 88810**
103 200 05 01	**VKPC 88804**
103 200 07 01	**VKPC 88810**
103 200 16 01	**VKPC 88810**
103 200 17 01	**VKPC 88810**
103 200 18 01	**VKPC 88804**
103 200 20 01	**VKPC 88810**
103 200 21 01	**VKPC 88804**
103 200 26 01	**VKPC 88810**
103 200 27 01	**VKPC 88804**
103 200 37 01	**VKPC 88810**
103 200 38 01	**VKPC 88804**
104 200 03 01	**VKPC 88816**
104 200 08 00	**VKPC 88825**
104 200 13 01	**VKPC 88821**
104 200 27 01	**VKPC 88828**
104 200 28 01	**VKPC 88836**

OE	SKF
104 200 29 01	VKPC 88816
104 200 30 01	VKPC 88821
104 200 31 01	VKPC 88825
104 200 32 01	VKPC 88828
104 200 33 01	VKPC 88824
104 200 44 01	VKPC 88824
104 200 45 01	VKPC 88836
104 200 47 01	VKPC 88824
104 200 49 01	VKPC 88836
110 200 01 20	VKPC 88807
110 200 04 20	VKPC 88813
110 200 09 20	VKPC 88807
110 200 11 20	VKPC 88813
110 200 15 20	VKPC 88807
110 200 17 20	VKPC 88807
110 200 19 20	VKPC 88813
111 200 04 01	VKPC 88622
111 200 21 01	VKPC 88844
111 200 22 01	VKPC 81624
111 200 23 01	VKPC 88631
111 200 24 01	VKPC 88845
111 200 38 01	VKPC 88844
111 200 39 01	VKPC 88845
112 200 02 01	VKPC 88846
112 200 03 01	VKPC 88846
112 200 04 01	VKPC 88846
112 200 05 01	VKPC 88847
112 200 14 01	VKPC 88846
112 200 15 01	VKPC 88847
115 200 00 20	VKPC 88807
115 200 09 20	VKPC 88807
115 200 12 20	VKPC 88803
115 200 15 20	VKPC 88807
115 200 16 20	VKPC 88803
115 200 18 20	VKPC 88807
116 200 16 01	VKPC 88827
116 200 17 01	VKPC 88827
117 200 04 01	VKPC 88818
117 200 10 01	VKPC 88818
117 200 16 01	VKPC 88818
117 200 17 01	VKPC 88818
117 200 22 01	VKPC 88817
117 200 29 01	VKPC 88818
117 200 32 01	VKPC 88817
117 200 33 01	VKPC 88818
119 200 04 01	VKPC 88820
119 200 09 01	VKPC 88820
119 200 15 01	VKPC 88820
119 200 21 01	VKPC 88835
121 200 09 20	VKPC 88807
121 200 11 20	VKPC 88803
166 200 03 20	VKPC 88206
166 200 04 20	VKPC 88206
166 200 05 20	VKPC 88206
166 200 06 20	VKPC 88206
601 200 00 20	VKPC 88608
601 200 02 20	VKPC 88608
601 200 03 20	VKPC 88608
601 200 07 20	VKPC 88608
601 200 09 20	VKPC 88608
601 200 11 20	VKPC 88625
602 200 00 20	VKPC 88620
602 200 01 20	VKPC 88620

OE	SKF
602 200 02 20	VKPC 88620
603 200 00 20	VKPC 88620
605 200 01 20	VKPC 88842
605 200 03 20	VKPC 88842
605 200 05 20	VKPC 88842
605 200 08 20	VKPC 88842
611 200 02 01	VKPC 88843
611 200 12 01	VKPC 88843
616 200 04 20	VKPC 88809
616 200 05 20	VKPC 88809
616 200 07 20	VKPC 88809
617 200 05 20	VKPC 88809
617 200 07 20	VKPC 88808
636 200 21 01	VKPC 88801

MITSUBISHI

OE	SKF
25100-21010	VKPC 95008
M 855991	VKPC 86413
MD 009000	VKPC 95004
MD 011757	VKPC 95611
MD 021490	VKPC 95602
MD 030863	VKPC 95008
MD 034152	VKPC 95010
MD 041041	VKPC 95422
MD 050450	VKPC 95405
MD 060460	VKPC 95405
MD 179030	VKPC 95426
MD 300799	VKPC 95426
MD 306414	VKPC 95426
MD 345611	VKPC 86413
MD 971538	VKPC 95612
MD 971539	VKPC 95614
MD 972001	VKPC 95405
MD 972002	VKPC 95800
MD 972003	VKPC 95610
MD 972004	VKPC 95610
MD 972006	VKPC 95614
MD 972050	VKPC 95612
MD 972052	VKPC 95424
MD 972053	VKPC 95423
MD 972054	VKPC 95614
MD 974649	VKPC 95008
MD 980000	VKPC 95610
MD 997052	VKPC 95424
MD 997053	VKPC 95424
MD 997076	VKPC 95008
MD 997077	VKPC 95004
MD 997078	VKPC 95010
MD 997079	VKPC 95422
MD 997080	VKPC 95422
MD 997081	VKPC 95611
MD 997082	VKPC 95602
MD 997084	VKPC 95405
MD 997128	VKPC 95402
MD 997150	VKPC 95405
MD 997157	VKPC 95602
MD 997158	VKPC 95602
MD 997160	VKPC 95405
MD 997173	VKPC 95004
MD 997177	VKPC 95404
MD 997178	VKPC 95602

OE	SKF
MD 997244	VKPC 95610
MD 997417	VKPC 95424
MD 997418	VKPC 95427
MD 997421	VKPC 95010
MD 997430	VKPC 95423
MD 997485	VKPC 95010
MD 997515	VKPC 95610
MD 997609	VKPC 95008
MD 997610	VKPC 95004
MD 997611	VKPC 95010
MD 997612	VKPC 95422
MD 997613	VKPC 95422
MD 997614	VKPC 95611
MD 997615	VKPC 95422
MD 997616	VKPC 95602
MD 997619	VKPC 95010
MD 997620	VKPC 95427
MD 997621	VKPC 95424
MD 997622	VKPC 95423
MD 997634	VKPC 95610
MD 997686	VKPC 95800
MD 997692	VKPC 95404
MD 997699	VKPC 95010

NISSAN

OE	SKF
17400-1120	VKPC 92800
17400-1121	VKPC 92800
17400-1122	VKPC 92800
17400-1123	VKPC 92800
17400-1124	VKPC 92800
21010-01B25	VKPC 92204
21010-01B26	VKPC 92204
21010-01B27	VKPC 92204
21010-01B28	VKPC 92204
21010-01M00	VKPC 92205
21010-01M01	VKPC 92205
21010-01M25	VKPC 92205
21010-03W25	VKPC 92648
21010-05E25	VKPC 92615
21010-05E26	VKPC 92615
21010-05E27	VKPC 92615
21010-06E25	VKPC 92404
21010-06E26	VKPC 92404
21010-09W25	VKPC 92649
21010-09W26	VKPC 92649
21010-09W94	VKPC 92649
21010-0M300	VKPC 92408
21010-0M301	VKPC 92408
21010-10G25	VKPC 92650
21010-10G26	VKPC 92650
21010-12G25	VKPC 92823
21010-12G26	VKPC 92823
21010-12G27	VKPC 92823
21010-13200	VKPC 92648
21010-13201	VKPC 92648
21010-13225	VKPC 92648
21010-13226	VKPC 92648
21010-13286	VKPC 92648
21010-16A25	VKPC 92420
21010-16A26	VKPC 92420
21010-16A27	VKPC 92420
21010-16A85	VKPC 92420

OE	SKF
21010-16E02	VKPC 92821
21010-16E03	VKPC 92821
21010-16E25	VKPC 92821
21010-16E26	VKPC 92821
21010-17C25	VKPC 92634
21010-17C26	VKPC 92634
21010-17C27	VKPC 92634
21010-17S25	VKPC 92802
21010-17S26	VKPC 92802
21010-17S27	VKPC 92802
21010-18000	VKPC 92201
21010-18001	VKPC 92201
21010-18003	VKPC 92201
21010-18026	VKPC 92201
21010-18027	VKPC 92201
21010-19B25	VKPC 92209
21010-21000	VKPC 92207
21010-21001	VKPC 92207
21010-21002	VKPC 92207
21010-21025	VKPC 92207
21010-21026	VKPC 92207
21010-21027	VKPC 92207
21010-21028	VKPC 92207
21010-21029	VKPC 92207
21010-21058	VKPC 92207
21010-21085	VKPC 92207
21010-21088	VKPC 92207
21010-22J00	VKPC 92810
21010-22J25	VKPC 92810
21010-22J26	VKPC 92810
21010-24B25	VKPC 92209
21010-28J25	VKPC 92810
21010-28J26	VKPC 92810
21010-31U25	VKPC 92822
21010-31U26	VKPC 92822
21010-31U27	VKPC 92822
21010-31W25	VKPC 92649
21010-31W26	VKPC 92649
21010-40F25	VKPC 92645
21010-40F26	VKPC 92645
21010-41B00	VKPC 92208
21010-43G27	VKPC 92651
21010-43G29	VKPC 92651
21010-43G87	VKPC 92651
21010-43G88	VKPC 92651
21010-44G00	VKPC 92827
21010-44G25	VKPC 92827
21010-44G26	VKPC 92827
21010-44G27	VKPC 92827
21010-44G28	VKPC 92827
21010-50A25	VKPC 92205
21010-50A26	VKPC 92205
21010-50A27	VKPC 92205
21010-50A28	VKPC 92205
21010-50A94	VKPC 92205
21010-50V25	VKPC 92601
21010-53J00	VKPC 92412
21010-53Y00	VKPC 92408
21010-53Y01	VKPC 92408
21010-54A25	VKPC 92422
21010-54A26	VKPC 92422
21010-54A85	VKPC 92422
21010-61527	VKPC 92820

OE	SKF
21010-61528	VKPC 92820
21010-61529	VKPC 92820
21010-61585	VKPC 92820
21010-61594	VKPC 92820
21010-70J00	VKPC 92412
21010-71E25	VKPC 92405
21010-71E26	VKPC 92405
21010-71E27	VKPC 92405
21010-71E28	VKPC 92405
21010-71J00	VKPC 92408
21010-77A00	VKPC 92406
21010-80W25	VKPC 92630
21010-80W26	VKPC 92630
21010-80W27	VKPC 92630
21010-80W94	VKPC 92630
21010-81T25	VKPC 92810
21010-81T26	VKPC 92810
21010-86G00	VKPC 92645
21010-99B00	VKPC 92208
21010-9C600	VKPC 92926
21010-BA010	VKPC 92401
21010-C6025	VKPC 92820
21010-C6026	VKPC 92820
21010-C6525	VKPC 92820
21010-D0104	VKPC 92401
21010-D0125	VKPC 92401
21010-D0126	VKPC 92401
21010-D2825	VKPC 92422
21010-E3000	VKPC 92802
21010-E3001	VKPC 92802
21010-E3003	VKPC 92802
21010-E3004	VKPC 92802
21010-E3025	VKPC 92802
21010-E3026	VKPC 92802
21010-E3027	VKPC 92802
21010-E3028	VKPC 92802
21010-E3075	VKPC 92802
21010-E3087	VKPC 92802
21010-G3625	VKPC 92610
21010-G3626	VKPC 92610
21010-G3925	VKPC 92630
21010-G3926	VKPC 92630
21010-G3927	VKPC 92630
21010-G5510	VKPC 92600
21010-G5526	VKPC 92600
21010-G5585	VKPC 92600
21010-G5586	VKPC 92600
21010-G5594	VKPC 92600
21010-H1025	VKPC 92201
21010-H1026	VKPC 92201
21010-H5000	VKPC 92201
21010-H5025	VKPC 92201
21010-H5026	VKPC 92201
21010-H5028	VKPC 92201
21010-H6010	VKPC 92201
21010-H7225	VKPC 92203
21010-H7226	VKPC 92203
21010-H7227	VKPC 92203
21010-M5025	VKPC 92201
21010-M6625	VKPC 92201
21010-M6626	VKPC 92201
21010-N5826	VKPC 92630
21010-N5827	VKPC 92630

OE	SKF
21010-N5828	VKPC 92630
21010-N5829	VKPC 92630
21010-P7503	VKPC 92802
21010-P7525	VKPC 92802
21010-P7526	VKPC 92802
21010-P7527	VKPC 92802
21010-P7528	VKPC 92802
21010-P7585	VKPC 92802
21010-P7586	VKPC 92802
21010-P7587	VKPC 92802
21010-P7588	VKPC 92802
21010-R7400	VKPC 82201
21010-V0725	VKPC 92802
21010-V0726	VKPC 92802
21010-W1727	VKPC 92610
21010-W1786	VKPC 92610
21010-W3626	VKPC 92802
21010-W3627	VKPC 92802
21010-W3628	VKPC 92802
21010-W3685	VKPC 92802
21010-W3686	VKPC 92802
21010-W3694	VKPC 92802
21010-V4425	VKPC 92601
21010-W4425	VKPC 92601
21010-V4426	VKPC 92601
21010-W4426	VKPC 92601
21010-V5500	VKPC 92601
21010-V5510	VKPC 92601
21010-V5525	VKPC 92601
21010-V5526	VKPC 92601
21010-V5527	VKPC 92601
21010-V5528	VKPC 92601
21010-V5529	VKPC 92601
21010-V5585	VKPC 92601
21010-V5594	VKPC 92601
21010-V7025	VKPC 92802
21010-V7225	VKPC 92810
21010-V7226	VKPC 92810
21010-V7228	VKPC 92810
21010-V9400	VKPC 92601
21010-Y7025	VKPC 92802
BA010-06E26	VKPC 92404
BA010-12G26	VKPC 92823
BA010-16A27	VKPC 92420
BA010-21028	VKPC 92207
BA010-22J25	VKPC 92810
BA010-54A26	VKPC 92422
BA010-80W94	VKPC 92630
BA010-D0126	VKPC 92401
BA010-E3027	VKPC 92802
BA010-G3626	VKPC 92610
BA010-G5586	VKPC 92600
BA010-H7227	VKPC 92203
BA010-M6626	VKPC 92201
BA010-M6686	VKPC 92201
BA010-W3694	VKPC 92802
BA010-V5594	VKPC 92601

OPEL

OE	SKF
90540478	VKPC 85623
02866233	VKPC 85200
02898355	VKPC 85600

OE	SKF
03469874	VKPA 85605
09292375	VKPC 85203
13.34.000	VKPA 85609
13.34.002	VKPA 85609
13.34.004	VKPC 85202
13.34.006	VKPA 85609
13.34.008	VKPC 85407
13.34.009	VKPC 85603
13.34.010	VKPC 85206
13.34.011	VKPC 85401
13.34.012	VKPC 85406
13.34.013	VKPC 85400
13.34.014	VKPC 85408
13.34.015	VKPC 85406
13.34.016	VKPC 85403
13.34.017	VKPC 85610
13.34.021	VKPC 85603
13.34.023	VKPC 85202
13.34.024	VKPC 85401
13.34.025	VKPC 85206
13.34.027	VKPC 85201
13.34.029	VKPC 85200
13.34.031	VKPC 85404
13.34.032	VKPC 85600
13.34.034	VKPC 85410
13.34.035	VKPC 85600
13.34.037	VKPC 85200
13.34.038	VKPC 85610
13.34.041	VKPC 85611
13.34.045	VKPA 85605
13.34.046	VKPC 85211
13.34.050	VKPC 85611
13.34.052	VKPC 85404
13.34.054	VKPC 85409
13.34.058	VKPC 85203
13.34.059	VKPC 85613
13.34.062	VKPC 85602
13.34.070	VKPC 85202
13.34.071	VKPC 85201
13.34.072	VKPC 85600
13.34.074	VKPA 85605
13.34.079	VKPC 85602
13.34.081	VKPC 85600
13.34.084	VKPC 85400
13.34.087	VKPA 85605
13.34.097	VKPA 85608
13.34.098	VKPC 85206
13.34.099	VKPC 85406
13.34.101	VKPC 88826
13.34.102	VKPC 85410
13.34.105	VKPC 85404
13.34.107	VKPC 85410
13.34.112	VKPC 88826
13.34.114	VKPC 85621
13.34.115	VKPC 85620
13.34.117	VKPC 85623
13.34.119	VKPC 85611
13.34.121	VKPC 85622
13.34.124	VKPC 88826
13.34.130	VKPC 85220
13.34.131	VKPC 85613
13.34.135	VKPC 85624
13.34.137	VKPC 85611

OE	SKF
90007451	VKPA 85608
90076952	VKPC 85202
90091035	VKPC 85201
90124093	VKPC 85403
90136224	VKPC 85600
90156532	VKPA 85608
90183273	VKPC 85202
90220568	VKPC 85407
90233511	VKPA 85609
90234200	VKPC 85401
90272361	VKPC 85407
90281612	VKPC 85610
90284802	VKPC 85400
90284813	VKPC 85408
90284913	VKPC 85408
90285418	VKPC 85406
90295077	VKPC 85406
90295078	VKPC 85408
90324217	VKPC 85603
90325659	VKPC 85202
90325660	VKPC 85206
90325661	VKPC 85401
90341998	VKPC 85404
90349239	VKPC 85206
90349241	VKPC 85202
90442207	VKPC 85610
90443549	VKPC 85611
90444079	VKPC 85211
90444123	VKPC 85409
90444311	VKPC 85611
90444649	VKPC 85613
90541671	VKPC 88826
90542606	VKPC 85220
90543277	VKPC 85613
90543935	VKPC 85624
94124093	VKPC 85403
94341998	VKPC 85404
94386207	VKPC 85410
97101319	VKPC 85410
97101320	VKPC 85404
97110386	VKPC 85410
97110387	VKPC 85404
97114682	VKPC 85620
97114683	VKPC 85621
97135548	VKPC 85622

PEUGEOT

OE	SKF
1201.29	VKPC 83203
1201.32	VKPC 83624
1201.33	VKPC 83603
1201.35	VKPC 83423
1201.36	VKPC 83617
1201.37	VKPC 83617
1201.38	VKPC 83628
1201.39	VKPC 83401
1201.40	VKPC 83630
1201.41	VKPC 83411
1201.42	VKPC 83604
1201.45	VKPC 83206
1201.48	VKPC 83424
1201.50	VKPC 83615
1201.51	VKPC 83424

www.bergab.ru Берг АБ bergab@ya.ru Тел. (495)-228-06-21, факс (495) 223-3071

OE	SKF
1201.52	VKPC 83420
1201.54	VKPC 83425
1201.55	VKPC 83425
1201.58	VKPC 83428
1201.59	VKPC 83401
1201.60	VKPC 83424
1201.61	VKPC 83615
1201.62	VKPC 83424
1201.63	VKPC 83401
1201.65	VKPC 83420
1201.67	VKPC 83420
1201.69	VKPC 83200
1201.70	VKPC 83810
1201.73	VKPC 83200
1201.74	VKPC 83423
1201.75	VKPC 83628
1201.76	VKPC 83604
1201.79	VKPC 83612
1201.80	VKPC 83408
1201.83	VKPC 83605
1201.85	VKPC 83625
1201.87	VKPC 83622
1201.91	VKPC 83420
1201.93	VKPC 83636
1201.95	VKPA 83431
1201.96	VKPA 83432
1201.97	VKPC 83428
1201.98	VKPC 83635
1201.A1	VKPC 83636
1201.A2	VKPC 83430
1201.A3	VKPC 83810
1201.A4	VKPC 83420
1201.A5	VKPC 83811
1201.A6	VKPC 83637
1201.A7	VKPC 83425
1201.A8	VKPC 83420
1201.C4	VKPC 83639
1201.C6	VKPC 83425
1201.C7	VKPC 83637
1201.E0	VKPC 83425
1201.E3	VKPC 83205
1201.E4	VKPC 83428
1201.E5	VKPC 83430
1201.E6	VKPC 83428
1202.19	VKPC 83203
1202.29	VKPC 83203
1202.38	VKPC 83409
1202.40	VKPC 83203
1202.42	VKPC 83604
1202.49	VKPC 83408
1202.50	VKPC 83203
1202.52	VKPC 83614
1202.55	VKPC 83203
1202.57	VKPC 83614
1202.58	VKPC 83200
1202.58	VKPA 83200
1202.60	VKPC 83424
1202.61	VKPC 83612
1202.62	VKPC 83614
1202.63	VKPC 83614
1202.67	VKPC 83203
1202.70	VKPC 83612
1202.71	VKPC 83612

OE	SKF
1202.73	VKPC 83616
1202.74	VKPC 83616
1202.75	VKPC 83605
1202.78	VKPC 83408
1202.79	VKPC 83409
1202.82	VKPC 83618
1202.85	VKPC 83616
1202.86	VKPC 83616
1202.87	VKPC 83605
1202.88	VKPC 83622
1202.89	VKPC 83620
1202.91	VKPC 83622
1202.92	VKPC 83620
1202.93	VKPC 83625
1202.94	VKPC 83624
1202.95	VKPC 83622
1202.97	VKPC 83618
1202.98	VKPC 83403
1202.99	VKPC 83622
1204.34	VKPC 83205
1207.18	VKPC 83205
1207.23	VKPC 83205
1207.25	VKPC 83428

PORSCHE

OE	SKF
048 121 011	VKPC 81601
060 121 011	VKPC 81601

PROTON

OE	SKF
MD 300799	VKPC 95426
MD 306414	VKPC 95426
MD 972054	VKPC 95614
MD 997609	VKPC 95008

RENAULT

OE	SKF
0980695500	VKPC 86208
50 01 001 274	VKPC 82630
74 38 610 006	VKPC 86618
77 00 105 176	VKPC 86416
77 00 105 378	VKPC 86416
77 00 106 101	VKPC 86633
77 00 107 845	VKPC 86633
77 00 111 841	VKPC 86633
77 00 274 330	VKPC 86416
77 00 859 931	VKPC 86631
77 00 861 627	VKPC 86633
77 00 861 686	VKPC 86415
77 00 864 596	VKPC 86215
77 00 866 518	VKPC 86216
77 00 871 801	VKPC 86631
77 01 450 295	VKPC 86410
77 01 452 155	VKPC 86403
77 01 452 158	VKPC 86203
77 01 457 085	VKPC 86410
77 01 457 415	VKPC 86403
77 01 457 447	VKPC 86203
77 01 457 450	VKPC 86208
77 01 457 451	VKPC 86202
77 01 457 453	VKPC 86203

OE	SKF
77 01 457 671	VKPC 86201
77 01 457 672	VKPC 86410
77 01 459 820	VKPC 83200
77 01 459 820	VKPA 83200
77 01 459 890	VKPC 86208
77 01 460 697	VKPC 86401
77 01 460 698	VKPC 86407
77 01 460 698	VKPA 86407
77 01 460 698	VKPC 86412
77 01 461 006	VKPC 86405
77 01 461 101	VKPC 86412
77 01 461 101	VKPC 86407
77 01 461 101	VKPA 86407
77 01 461 173	VKPC 86200
77 01 461 173	VKPA 86200
77 01 461 174	VKPC 86202
77 01 461 236	VKPC 86412
77 01 461 236	VKPC 86407
77 01 461 236	VKPA 86407
77 01 461 336	VKPC 86623
77 01 461 405	VKPC 86602
77 01 462 085	VKPC 86412
77 01 462 085	VKPC 86407
77 01 462 085	VKPA 86407
77 01 462 086	VKPC 86412
77 01 462 145	VKPC 86206
77 01 462 145	VKPA 86206
77 01 462 389	VKPC 86402
77 01 462 419	VKPC 86206
77 01 462 419	VKPA 86206
77 01 462 491	VKPC 86206
77 01 462 491	VKPA 86206
77 01 462 808	VKPC 82630
77 01 462 809	VKPC 86413
77 01 463 014	VKPC 86205
77 01 463 111	VKPC 86413
77 01 463 182	VKPC 86602
77 01 463 377	VKPC 86206
77 01 463 377	VKPA 86206
77 01 463 397	VKPC 86413
77 01 463 637	VKPC 86622
77 01 464 030	VKPC 86603
77 01 464 054	VKPC 86209
77 01 464 538	VKPC 86408
77 01 464 736	VKPC 86413
77 01 465 122	VKPC 86601
77 01 465 513	VKPC 86603
77 01 465 643	VKPC 86604
77 01 465 816	VKPC 86413
77 01 466 121	VKPC 86402
77 01 466 152	VKPC 86408
77 01 466 410	VKPC 86206
77 01 466 410	VKPA 86206
77 01 466 419	VKPC 86206
77 01 466 419	VKPA 86206
77 01 466 420	VKPC 86209
77 01 466 571	VKPC 86621
77 01 466 578	VKPC 86413
77 01 466 778	VKPC 86615
77 01 466 779	VKPC 86616
77 01 466 788	VKPC 86606
77 01 467 153	VKPC 86212
77 01 467 153	VKPA 86212

OE	SKF
77 01 467 223	VKPC 86603
77 01 467 278	VKPC 82638
77 01 467 546	VKPC 86200
77 01 467 547	VKPC 86202
77 01 467 548	VKPC 86410
77 01 467 549	VKPC 86407
77 01 467 549	VKPA 86407
77 01 467 622	VKPC 86631
77 01 467 642	VKPC 86217
77 01 467 642	VKPA 86217
77 01 467 915	VKPC 86205
77 01 468 342	VKPC 82630
77 01 468 491	VKPC 86413
77 01 473 365	VKPC 86413
77 01 502 428	VKPC 86410
77 01 505 397	VKPC 86201
77 01 506 944	VKPC 86203
77 01 508 975	VKPC 86202
77 01 633 125	VKPC 86409
82 00 042 514	VKPC 86633

ROVER

OE	SKF
117850	VKPC 87800
118476	VKPC 87800
118676	VKPC 87800
26526500010	VKPC 87610
494094	VKPC 87606
759563	VKPC 87606
GWP 101	VKPC 87200
GWP 102	VKPC 87200
GWP 1104	VKPC 93207
GWP 1140	VKPC 93207
GWP 1143	VKPC 93205
GWP 117	VKPC 87200
GWP 132	VKPC 87200
GWP 134	VKPC 87200
GWP 151	VKPC 87205
GWP 153	VKPC 87207
GWP 154	VKPC 87206
GWP 157	VKPC 87403
GWP 158	VKPC 87205
GWP 160	VKPC 87200
GWP 164	VKPC 87609
GWP 168	VKPC 87200
GWP 171	VKPC 87205
GWP 173	VKPC 87403
GWP 176	VKPC 87609
GWP 179	VKPC 87200
GWP 181	VKPC 87205
GWP 183	VKPC 87403
GWP 185	VKPC 87609
GWP 186	VKPC 87200
GWP 188	VKPC 87205
GWP 193	VKPC 87813
GWP 195	VKPC 83205
GWP 2151	VKPC 87816
GWP 2154	VKPC 87816
GWP 2155	VKPC 87607
GWP 2156	VKPC 87816
GWP 2157	VKPC 87404
GWP 2161	VKPC 87404
GWP 2162	VKPC 82642

www.bergab.ru Берг АБ bergab@ya.ru Тел. (495)-228-06-21, факс (495) 223-3071

OE	SKF
GWP 2163	VKPC 87404
GWP 2165	VKPC 87607
GWP 2166	VKPC 87607
GWP 2513	VKPC 83420
GWP 2523	VKPC 82642
GWP 2707	VKPC 87607
GWP 306	VKPC 87602
GWP 312	VKPC 87602
GWP 320	VKPC 87600
GWP 329	VKPC 87605
GWP 330	VKPC 87610
GWP 333	VKPC 87401
GWP 336	VKPC 87400
GWP 337	VKPC 83424
GWP 338	VKPC 83424
GWP 341	VKPC 83205
GWP 342	VKPC 93601
GWP 343	VKPC 87814
GWP 344	VKPC 83420
GWP 345	VKPC 93601
GWP 346	VKPC 83428
GWP 347	VKPC 87813
PEB 10095	VKPC 87813
STC 637	VKPC 87605
RTC 3644	VKPC 87605
RTC 6328	VKPC 87602
RTC 6395	VKPC 87835

SAAB

OE	SKF
4772711	VKPC 85623
4770970	VKPC 85613
5005036	VKPC 84400
6036362	VKPC 84400
7501547	VKPC 84611
7507460	VKPC 84611
8810988	VKPC 84400
8817900	VKPC 84611
8817918	VKPC 84612
8819948	VKPC 84613
8821944	VKPC 85613
8822710	VKPC 86630
8822744	VKPC 86630
9121670	VKPC 84612
9148289	VKPC 84613
9307893	VKPC 84611
9321670	VKPC 84612
9321688	VKPC 84613
9321951	VKPC 86630

SEAT

OE	SKF
021 121 004	VKPC 81611
021 121 004 A	VKPC 81611
021 121 004 X	VKPC 81611
026 121 005 C	VKPC 81401
026 121 005 F	VKPC 81402
026 121 005 H	VKPC 81401
028 121 004	VKPC 81615
028 121 004 V	VKPC 81615
028 121 004 X	VKPC 81615
030 121 005 L	VKPC 81204
030 121 005 LV	VKPC 81204
030 121 005 LX	VKPC 81204
030 121 005 N	VKPC 81210
030 121 005 NV	VKPC 81210
030 121 005 NX	VKPC 81210
030 121 005 S	VKPC 81215
030 121 005 SV	VKPC 81215
030 121 005 SX	VKPC 81215
030 121 005 T	VKPC 81210
030 121 005 TV	VKPC 81210
030 121 005 TX	VKPC 81210
030 121 008 A	VKPC 81215
030 121 008 AV	VKPC 81215
030 121 008 AX	VKPC 81215
031 121 005 A	VKPC 81206
036 121 005	VKPC 81411
036 121 005 B	VKPC 81407
036 121 005 D	VKPC 81411
036 121 005 DV	VKPC 81411
036 121 005 DX	VKPC 81411
036 121 005 E	VKPC 81407
036 121 005 EV	VKPC 81407
036 121 005 EX	VKPC 81407
036 121 005 F	VKPC 81419
036 121 005 J	VKPC 81419
036 121 005 P	VKPC 81419
036 121 005 Q	VKPC 81407
036 121 005 QV	VKPC 81407
036 121 005 V	VKPC 81411
036 121 005 X	VKPC 81411
037 121 005 B	VKPC 81401
037 121 010 A	VKPA 81401
037 121 010 AV	VKPA 81401
037 121 010 AX	VKPA 81401
038 121 011 A	VKPC 81623
038 121 011 AV	VKPC 81623
038 121 011 AX	VKPC 81623
038 121 011 C	VKPC 81626
038 121 011 D	VKPC 81626
045 121 011 B	VKPC 81417
045 121 011 C	VKPC 81416
047 121 011 B	VKPC 81412
06A 121 011 E	VKPC 81620
06A 121 011 EV	VKPC 81620
06A 121 011 EX	VKPC 81620
06A 121 011 FV	VKPC 81620
06A 121 011 L	VKPC 81620
06A 121 011 LV	VKPC 81620
06A 121 011 LX	VKPC 81620
06B 121 011 B	VKPC 81408
06B 121 011 BV	VKPC 81408
06B 121 011 BX	VKPC 81408
06B 121 011 E	VKPC 81408
06B 121 011 EV	VKPC 81408
06B 121 011 EX	VKPC 81408
071 121 005	VKPC 81622
077 121 004 A	VKPC 81806
077 121 004 F	VKPC 81807
077 121 004 FV	VKPC 81807
077 121 004 FX	VKPC 81807
077 121 004 G	VKPC 81806
077 121 004 GX	VKPC 81806
077 121 004 H	VKPC 81807
078 121 004 L	VKPC 81811
078 121 004 R	VKPC 81811
121 201 06 01	VKPC 82619
4755003	VKPC 82606
4764782	VKPC 82606
7303050	VKPC 82606
BA 03209901	VKPC 82205
BD 03200102	VKPC 82205
ES 03200101	VKPC 82204
FA 03200003	VKPC 82404
GE 03200002	VKPC 82412
HB 03200000	VKPA 82202
RF 03200001	VKPC 82415
SE 020032000 A	VKPA 82202
SE 021032000	VKPC 82419
SE 021032000 A	VKPC 82419
SE 20032000	VKPA 82202
SE 20032000 A	VKPA 82202
SE 700032000 A	VKPC 82410
SE 700032000 A	VKPA 82410
SE 700032000 C	VKPA 82435

SKODA

OE	SKF
7070251	VKPC 81412
028 121 004	VKPC 81615
028 121 004 V	VKPC 81615
028 121 004 X	VKPC 81615
030 121 005 N	VKPC 81210
030 121 005 NV	VKPC 81210
030 121 005 NX	VKPC 81210
030 121 005 T	VKPC 81210
030 121 005 TV	VKPC 81210
030 121 005 TX	VKPC 81210
036 121 005 B	VKPC 81407
036 121 005 E	VKPC 81407
036 121 005 EV	VKPC 81407
036 121 005 EX	VKPC 81407
036 121 005 F	VKPC 81419
036 121 005 J	VKPC 81419
036 121 005 P	VKPC 81419
038 121 011	VKPC 81621
038 121 011 A	VKPC 81623
038 121 011 AV	VKPC 81623
038 121 011 AX	VKPC 81623
038 121 011 C	VKPC 81626
038 121 011 D	VKPC 81626
045 121 011 B	VKPC 81417
045 121 011 C	VKPC 81416
047 121 011	VKPC 81406
047 121 011 A	VKPC 81406
047 121 011 B	VKPC 81412
06A 121 011 E	VKPC 81620
06A 121 011 EV	VKPC 81620
06A 121 011 EX	VKPC 81620
06B 121 011 B	VKPC 81408
06B 121 011 BV	VKPC 81408
06B 121 011 BX	VKPC 81408
06B 121 011 E	VKPC 81408
06B 121 011 EV	VKPC 81408
06B 121 011 EX	VKPC 81408
077 121 004 A	VKPC 81806
077 121 004 F	VKPC 81807
077 121 004 FV	VKPC 81807
077 121 004 FX	VKPC 81807
077 121 004 G	VKPC 81806
077 121 004 GX	VKPC 81806
077 121 004 H	VKPC 81807
078 121 004 L	VKPC 81811
078 121 004 R	VKPC 81811
113050000	VKPC 88204
115050001	VKPC 81405
7070243	VKPC 81409
7070246	VKPC 81406

SMART

OE	SKF
3165VOO3000000	VKPC 88848
4681VOO2000000	VKPC 88848

SUBARU

OE	SKF
17400-82850	VKPC 96210
17400-82851	VKPC 96210
21110-AA000	VKPC 99405
21110-AA001	VKPC 99405
21110-AA002	VKPC 99405
21110-AA003	VKPC 99405
21110-AA012	VKPC 99406
21110-AA013	VKPC 99406
21110-AA014	VKPC 99406
21110-AA015	VKPC 99406
21110-AA016	VKPC 99406
21110-AA017	VKPC 99406
21110-AA050	VKPC 99403
21110-AA060	VKPC 99404
21111-AA000	VKPC 99407
21111-AA001	VKPC 99407
21111-AA002	VKPC 99407
21111-AA003	VKPC 99407
21111-AA004	VKPC 99407
21111-AA007	VKPC 99407
21111-AA011	VKPC 99407
41076-7000	VKPC 99403
41076-7100	VKPC 99404
41076-7200	VKPC 99403
41076-7300	VKPC 99404

SUZUKI

OE	SKF
17400-60810	VKPC 96402
17400-60811	VKPC 96402
17400-60812	VKPC 96402
17400-60813	VKPC 96402
17400-60814	VKPC 96402
17400-60815	VKPC 96402
17400-72801	VKPC 96204
17400-73001	VKPC 96204
17400-73002	VKPC 96204
17400-73003	VKPC 96204
17400-73003	VKPC 96204
17400-73012	VKPC 96204
17400-73013	VKPC 96204
17400-73810	VKPC 96204
17400-73811	VKPC 96204

www.bergab.ru Берг АБ bergab@ya.ru Тел. (495)-228-06-21, факс (495) 223-3071

OE	SKF
17400-73820	VKPC 96204
17400-78820	VKPC 96204
17400-78821	VKPC 96204
17400-82810	VKPC 96212
17400-82811	VKPC 96212
17400-82812	VKPC 96212
17400-82820	VKPC 96210
17400-82821	VKPC 96210
17400-82822	VKPC 96210
17400-82850	VKPC 96210
17400-82851	VKPC 96210
17400-83810	VKPC 96212
17400-83811	VKPC 96212
17400-83812	VKPC 96212
17400-83814	VKPC 96212
17400-M82631	VKPC 96210

TALBOT

OE	SKF
1201.39	VKPC 83401
1201.41	VKPC 83411
1201.45	VKPC 83206
1202.58	VKPC 83200
1202.58	VKPA 83200
18212400	VKPC 83411
20262700	VKPC 83417
20263800	VKPC 83417
20443700	VKPC 83417
7901120258	VKPC 83200
7901120258	VKPA 83200

TOYOTA

OE	SKF
16100-09010	VKPA 91409
16100-09060	VKPA 91441
16100-09060	VKPC 91441
16100-19015	VKPC 91402
16100-19016	VKPC 91402
16100-19017	VKPC 91402
16100-19025	VKPA 91431
16100-19026	VKPA 91431
16100-19027	VKPA 91431
16100-19028	VKPA 91431
16100-19045	VKPC 91427
16100-19046	VKPC 91427
16100-19055	VKPC 91419
16100-19056	VKPC 91419
16100-19075	VKPC 91410
16100-19076	VKPC 91410
16100-19077	VKPC 91410
16100-19095	VKPA 91407
16100-19105	VKPA 91409
16100-19106	VKPA 91409
16100-19125	VKPA 91417
16100-19126	VKPA 91417
16100-19155	VKPC 91427
16100-19156	VKPC 91427
16100-19165	VKPC 91419
16100-19166	VKPC 91419
16100-19225	VKPA 91417
16100-19226	VKPA 91417
16100-19265	VKPA 91441
16100-19265	VKPC 91441
16100-19305	VKPA 91441
16100-19305	VKPC 91441
16100-19625	VKPA 91441
16100-19625	VKPC 91441
16100-26020	VKPC 91403
16100-26021	VKPC 91403
16100-26022	VKPC 91403
16100-28010	VKPC 91403
16100-28020	VKPC 91403
16100-28022	VKPC 91403
16100-39116	VKPC 91424
16100-39315	VKPC 91616
16100-39316	VKPC 91616
16100-39317	VKPC 91616
16100-39345	VKPC 91617
16100-39346	VKPC 91617
16100-39349	VKPC 91617
16100-55011	VKPC 91201
16100-59135	VKPC 91606
16100-59136	VKPC 91606
16100-59137	VKPC 91606
16100-59138	VKPC 91606
16100-59155	VKPC 91607
16100-59235	VKPC 91201
16100-69085	VKPC 91405
16100-69225	VKPC 91804
16100-69275	VKPC 91405
16100-69295	VKPC 91405
16100-69296	VKPC 91405
16100-69345	VKPC 91804
16100-79035	VKPC 91428
16100-79036	VKPC 91428
16100-79135	VKPC 91613
16100-79165	VKPA 91615
16100-79205	VKPC 91442
16100-79225	VKPC 91442
16100-88260	VKPC 91412
16110-09010	VKPC 91613
16110-09030	VKPA 91441
16110-09030	VKPC 91441
16110-15050	VKPC 91409
16110-15060	VKPC 91409
16110-15070	VKPC 91415
16110-15080	VKPC 91415
16110-16010	VKPC 91407
16110-16020	VKPC 91414
16110-19035	VKPC 91431
16110-19036	VKPC 91431
16110-19045	VKPC 91409
16110-19046	VKPC 91409
16110-19047	VKPC 91409
16110-19055	VKPC 91413
16110-19055	VKPC 91417
16110-19065	VKPC 91413
16110-19075	VKPC 91415
16110-19076	VKPC 91415
16110-19085	VKPC 91415
16110-19086	VKPC 91415
16110-19095	VKPC 91413
16110-19105	VKPC 91413
16110-19106	VKPC 91413
16110-19106	VKPC 91417
16110-19146	VKPC 91416
16110-19155	VKPC 91407
16110-19165	VKPC 91414
16110-19185	VKPA 91441
16110-19185	VKPC 91441
16110-19205	VKPC 91416
16110-28010	VKPC 91403
16110-28020	VKPC 91403
16110-39035	VKPC 91616
16110-63010	VKPC 91404
16110-69035	VKPC 91404
16110-69036	VKPC 91404
16110-69045	VKPC 91804
16110-79015	VKPC 91604
16110-79025	VKPC 91613
16110-79045	VKPC 91613
16110-79095	VKPC 91604
16110-79115	VKPC 91604
16110-88260	VKPC 91412

VAUXHALL

OE	SKF
13.34.008	VKPC 85407
13.34.013	VKPC 85400
13.34.014	VKPC 85408
13.34.015	VKPC 85406
13.34.023	VKPC 85202
13.34.024	VKPC 85401
13.34.025	VKPC 85206
13.34.071	VKPC 85201
13.34.081	VKPC 85600
13.34.087	VKPC 85600
13.34.087	VKPA 85605
13.34.091	VKPC 85600
13.34.097	VKPC 85600
13.34.097	VKPA 85608
13.34.098	VKPC 85206
13.34.121	VKPC 85622
9001035	VKPC 85201
90136224	VKPC 85600
90136377	VKPC 85600
90136377	VKPA 85605
90136382	VKPC 85600
90156532	VKPC 85600
90156532	VKPA 85608
90220568	VKPC 85407
90284802	VKPC 85400
90284913	VKPC 85408
90285418	VKPC 85406
90325659	VKPC 85202
90325660	VKPC 85206
90325661	VKPC 85401
91151669	VKPC 82810
94341998	VKPC 85404
94386207	VKPC 85410
97101319	VKPC 85410
97101320	VKPC 85404
97110386	VKPC 85410
97110387	VKPC 85404
97114682	VKPC 85620
97114683	VKPC 85621
97135548	VKPC 85622
R1160008	VKPC 85201
R1160009	VKPC 85400
R1160010	VKPC 85406
R1160012	VKPC 85206
R1160013	VKPC 85202
R1160018	VKPC 85407
R1160019	VKPC 85401
R1160020	VKPC 85408
R1160025	VKPC 85410
R1160026	VKPC 85404
R1160027	VKPC 85603
R1160028	VKPC 85404
R1160030	VKPC 85211
R1160031	VKPC 85409
R1160032	VKPC 85611
R1160033	VKPA 85605
R1160034	VKPC 85610
R1160036	VKPC 85620
R1160037	VKPC 85410
R1160038	VKPC 85621
R1160039	VKPC 85622
R1160043	VKPC 85613
R1160044	VKPC 82810

VOLKSWAGEN

OE	SKF
00A 121 010	VKPC 81624
021 121 004	VKPC 81611
021 121 004 A	VKPC 81611
021 121 004 V	VKPC 81611
021 121 004 X	VKPC 81611
023 121 004	VKPC 81803
023 121 004 V	VKPC 81803
023 121 004 X	VKPC 81803
025 121 010 A	VKPC 81607
025 121 010 AV	VKPC 81607
025 121 010 AX	VKPC 81607
025 121 010 B	VKPC 81608
025 121 010 BV	VKPC 81608
025 121 010 BX	VKPC 81608
025 121 010 C	VKPC 81609
025 121 010 CV	VKPC 81609
025 121 010 CX	VKPC 81609
026 121 004	VKPC 81615
026 121 004 V	VKPC 81615
026 121 004 X	VKPC 81615
026 121 005 A	VKPC 81401
026 121 005 C	VKPC 81401
026 121 005 E	VKPC 81401
026 121 005 F	VKPC 81402
026 121 005 FV	VKPC 81402
026 121 005 FX	VKPC 81402
026 121 005 G	VKPC 81401
026 121 005 H	VKPC 81401
026 121 005 K	VKPC 81402
026 121 010 C	VKPA 81401
026 121 010 CV	VKPA 81401
026 121 010 CX	VKPA 81401
026 121 010 D	VKPA 81400
028 121 004	VKPC 81615
028 121 004 V	VKPC 81615
028 121 004 X	VKPC 81615
030 121 004 A	VKPC 81204

www.bergab.ru Берг АБ bergab@ya.ru Тел. (495)-228-06-21, факс (495) 223-3071

OE	SKF
030 121 004 B	VKPC 81204
030 121 004 H	VKPC 81204
030 121 005 L	VKPC 81204
030 121 005 LV	VKPC 81204
030 121 005 LX	VKPC 81204
030 121 005 N	VKPC 81210
030 121 005 NV	VKPC 81210
030 121 005 NX	VKPC 81210
030 121 005 S	VKPC 81215
030 121 005 SV	VKPC 81215
030 121 005 SX	VKPC 81215
030 121 005 T	VKPC 81210
030 121 005 TV	VKPC 81210
030 121 005 TX	VKPC 81210
030 121 008 A	VKPC 81215
030 121 008 AV	VKPC 81215
030 121 008 AX	VKPC 81215
031 121 004	VKPC 81206
031 121 004 A	VKPC 81206
031 121 004 AV	VKPC 81206
031 121 004 AX	VKPC 81206
031 121 004 V	VKPC 81206
031 121 004 X	VKPC 81206
031 121 005 A	VKPC 81206
031 121 005 C	VKPC 81206
034 121 004 V	VKPC 81606
034 121 004 X	VKPC 81606
034 121 005 D	VKPC 81606
035 121 004 A	VKPC 81605
035 121 005 B	VKPC 81605
035 121 005 C	VKPC 81605
035 121 005 E	VKPC 81605
036 121 005	VKPC 81411
036 121 005 B	VKPC 81407
036 121 005 D	VKPC 81411
036 121 005 DV	VKPC 81411
036 121 005 DX	VKPC 81411
036 121 005 E	VKPC 81407
036 121 005 E	VKPC 81407
036 121 005 EV	VKPC 81407
036 121 005 EX	VKPC 81407
036 121 005 F	VKPC 81419
036 121 005 J	VKPC 81419
036 121 005 P	VKPC 81419
036 121 005 Q	VKPC 81407
036 121 005 QX	VKPC 81407
036 121 005 V	VKPC 81411
036 121 005 X	VKPC 81411
037 121 004 A	VKPA 81401
037 121 004 AV	VKPA 81401
037 121 004 AX	VKPA 81401
037 121 005 B	VKPC 81401
037 121 010 A	VKPA 81401
037 121 010 AV	VKPA 81401
037 121 010 AX	VKPA 81401
037 121 010 B	VKPA 81401
037 121 010 BX	VKPA 81401
038 121 011	VKPC 81621
038 121 011 A	VKPC 81623
038 121 011 AV	VKPC 81623
038 121 011 AX	VKPC 81623
038 121 011 C	VKPC 81626
038 121 011 D	VKPC 81626

OE	SKF
045 121 011 B	VKPC 81417
045 121 011 C	VKPC 81416
046 121 004	VKPC 81603
047 121 011 B	VKPC 81412
048 121 011	VKPC 81601
050 121 010 A	VKPA 81402
050 121 010 AV	VKPA 81402
050 121 010 AX	VKPA 81402
052 121 004	VKPC 81200
052 121 004 V	VKPC 81200
052 121 004 X	VKPC 81200
052 121 005 A	VKPC 81200
052 121 005 AX	VKPC 81200
055 121 010	VKPA 81400
055 121 010 X	VKPA 81400
056 121 005 A	VKPC 81400
056 121 011	VKPA 81400
056 121 013 A	VKPA 81400
059 121 004 B	VKPC 81625
059 121 004 C	VKPC 81625
059 121 004 D	VKPC 81625
059 121 004 E	VKPC 81625
060 121 011	VKPC 81601
068 121 005	VKPC 81400
068 121 005 B	VKPC 81400
068 121 005 C	VKPC 81400
068 121 010 A	VKPA 81401
068 121 010 AX	VKPA 81401
069 121 004	VKPC 81602
069 121 004 V	VKPC 81602
069 121 004 X	VKPC 81602
069 121 005 D	VKPC 81602
06A 121 011 E	VKPC 81620
06A 121 011 EV	VKPC 81620
06A 121 011 EX	VKPC 81620
06A 121 011 F	VKPC 81620
06A 121 011 G	VKPC 81620
06A 121 011 L	VKPC 81620
06A 121 011 LV	VKPC 81620
06A 121 011 LX	VKPC 81620
06B 121 011 B	VKPC 81408
06B 121 011 BV	VKPC 81408
06B 121 011 BX	VKPC 81408
06B 121 011 E	VKPC 81408
06B 121 011 EV	VKPC 81408
06B 121 011 EX	VKPC 81408
071 121 005	VKPC 81622
073 121 004	VKPC 81610
073 121 004 V	VKPC 81610
073 121 004 X	VKPC 81610
073 121 005	VKPC 81610
074 121 004	VKPC 86619
074 121 004 A	VKPC 86619
074 121 004 AV	VKPC 86619
074 121 004 AX	VKPC 86619
074 121 005 N	VKPC 86619
074 121 005 NX	VKPC 86619
074 121 004 V	VKPC 86619
074 121 004 X	VKPC 86619
077 121 004 A	VKPC 81806
077 121 004 F	VKPC 81807
077 121 004 FV	VKPC 81807
077 121 004 FX	VKPC 81807

OE	SKF
077 121 004 G	VKPC 81806
077 121 004 GX	VKPC 81806
077 121 004 H	VKPC 81807
078 121 004 H	VKPC 81802
078 121 004 HV	VKPC 81802
078 121 004 HX	VKPC 81802
078 121 004 J	VKPC 81802
078 121 004 JV	VKPC 81802
078 121 004 JX	VKPC 81802
078 121 004 L	VKPC 81811
078 121 004 Q	VKPC 81802
078 121 004 QX	VKPC 81802
078 121 004 R	VKPC 81811
89202007000	VKPC 81201
J16100-39346	VKPC 91617
J16100-59155	VKPC 91607
J16100-79036	VKPC 91428

VOLVO

1257185-7	VKPC 81602
1326342-1	VKPC 86609
1336029-2	VKPC 86614
270559-8	VKPC 86609
270681-0	VKPC 86610
271275-0	VKPC 86609
271602-5	VKPC 86607
271613-2	VKPC 81602
271647-0	VKPC 86618
271768-4	VKPC 86619
271830-2	VKPC 86609
271855-9	VKPC 86618
271975-5	VKPC 86609
271984-7	VKPC 86618
271985-4	VKPC 86618
271986-2	VKPC 86618
275619-5	VKPC 86610
3085599-1	VKPC 86413
3100129-0	VKPC 86203
3242084	VKPC 86413
3267343-6	VKPC 86403
3283043-2	VKPC 86612
3287335-8	VKPC 86402
3287751-6	VKPC 86413
3343093-5	VKPC 86413
3344250-0	VKPC 86402
3344251-8	VKPC 86413
3344252-6	VKPC 86614
3344253	VKPC 86612
3344827-5	VKPC 86413
3344831-7	VKPC 86413
3345626-0	VKPC 86413
418327-3	VKPC 86607
419689	VKPC 86607
419691	VKPC 86607
463425-9	VKPC 86610

ZASTAVA/YUGO

4471378	VKPA 82202
5882695	VKPC 82206
5882695	VKPA 82206

www.bergab.ru Берг АБ bergab@ya.ru Тел. (495)-228-06-21, факс (495) 223-3071

AIRTEX

1076-M1	VKPC 86203
1079-1	VKPC 87602
1086	VKPC 82404
1088-M	VKPC 83206
1092	VKPC 86403
1094	VKPA 82202
1097-L	VKPC 82412
1101	VKPC 88803
1102	VKPC 88807
1105-1	VKPC 86201
1111	VKPC 84205
1114	VKPC 86200
1121-M	VKPC 83612
1124	VKPC 82415
1124-D	VKPA 82410
1127	VKPA 83200
1127-1	VKPC 83200
1128	VKPC 83616
1130	VKPC 82606
1130-1	VKPC 82630
1132	VKPC 83603
1134	VKPC 86602
1135	VKPC 83401
1137	VKPC 81601
1138	VKPC 81200
1139	VKPC 81400
1140	VKPC 81401
1143	VKPC 88609
1145	VKPC 88802
1149	VKPC 83607
1151	VKPC 84207
1159	VKPC 85200
1161	VKPC 85203
1162	VKPC 85201
1163	VKPC 85202
1164	VKPC 85206
1164-C	VKPC 85401
1165	VKPC 85400
1165-D	VKPC 85406
1167	VKPC 85407
1168	VKPC 85603
1170	VKPC 87203
1175	VKPC 83618
1176	VKPC 83403
1180	VKPC 86610
1189	VKPC 82201
1190	VKPC 81602
1191	VKPA 85605
1193	VKPC 83617
1194	VKPC 81605
1195	VKPC 86413
1196	VKPC 82419
1197	VKPC 84403
1198	VKPC 82424
1200	VKPC 82616
1201	VKPC 82621
1202	VKPC 82623
1205-1	VKPC 82206
1206	VKPC 83423
1207	VKPC 83604
1208	VKPC 83203
1210	VKPC 83625
1211	VKPC 83624
1212	VKPC 83205
1214	VKPC 83626
1215	VKPC 82600
1217	VKPC 82208
1218	VKPC 88605
1219	VKPC 88610
1222	VKPC 82614
1225	VKPC 82622
1226	VKPC 84601
1227	VKPC 84600
1229	VKPC 84208
1230	VKPC 84609
1231	VKPC 84201
1232	VKPC 84200
1233	VKPC 88613
1235	VKPC 88608
1236	VKPC 88620
1237	VKPC 88813
1238	VKPC 86401
1239	VKPC 86402
1243	VKPC 86603
1245	VKPC 88204
1247	VKPC 86609
1248	VKPC 86614
1285	VKPC 84603
1286	VKPC 84616
1287	VKPC 84618
1288	VKPA 82222
1290	VKPC 87600
1291	VKPC 92802
1292	VKPC 92207
1293	VKPC 92201
1294	VKPC 85408
1296	VKPC 88607
1299	VKPC 82632
1300	VKPC 82800
1302	VKPC 82621
1303	VKPC 81606
1305	VKPC 87403
1306	VKPC 87205
1307	VKPC 88611
1308	VKPC 88612
1310	VKPC 83424
1312	VKPA 82220
1318	VKPA 82431
1321	VKPC 82432
1326	VKPA 82628
1328	VKPC 88604
1329	VKPA 85609
1330	VKPC 85610
1331	VKPC 83408
1332	VKPC 83409
1333	VKPC 83620
1334	VKPC 83622
1338	VKPC 81206
1340	VKPA 82608
1342	VKPC 83605
1345	VKPC 82216
1348	VKPA 81401
1349	VKPA 81400
1350	VKPC 84400
1351	VKPC 84608
1352	VKPC 86607
1355	VKPC 84617
1357	VKPC 86612
1358	VKPA 82428
1359	VKPC 83615
1361	VKPC 83420
1363	VKPC 82622
1364	VKPC 84209
1366	VKPC 86409
1368	VKPC 87404
1369	VKPC 88615
1370	VKPC 88616
1371	VKPC 88617
1372	VKPC 88614
1375	VKPC 82218
1376	VKPA 82218
1382	VKPC 93205
1383	VKPC 82629
1384	VKPC 84610
1385	VKPC 88203
1386	VKPC 88809
1387	VKPC 88808
1388	VKPC 85403
1390	VKPC 88804
1393	VKPC 88827
1394	VKPC 88810
1395	VKPC 82642
1396	VKPC 81603
1397	VKPC 81204
1398	VKPC 87400
1399	VKPC 87401
1400	VKPC 84411
1401	VKPC 92205
1402	VKPC 92404
1404	VKPC 84210
1405	VKPC 92600
1406	VKPC 88619
1411	VKPC 82436
1412	VKPC 82660
1415	VKPC 84408
1417	VKPC 88826
1419	VKPC 83428
1420	VKPC 83425
1421	VKPC 83630
1422	VKPA 82634
1424	VKPA 82648
1425	VKPC 82643
1426	VKPC 82647
1427	VKPC 82638
1428	VKPC 82230
1429	VKPA 82653
1430	VKPC 82431
1432	VKPA 82230
1433	VKPC 84405
1434	VKPC 84412
1435	VKPC 84409
1436	VKPC 82649
1437	VKPC 82650
1438	VKPC 82651
1439	VKPC 88816
1442	VKPC 88824
1443	VKPC 88622
1445	VKPC 88821
1446	VKPC 85211
1447	VKPC 85611
1448	VKPC 85409
1453	VKPC 86615
1454	VKPC 86616
1459	VKPC 87607
1460	VKPC 87813
1464	VKPC 87816
1465	VKPC 86618
1468	VKPC 84607
1475	VKPC 86622
1476	VKPC 82420
1478	VKPC 81608
1485	VKPC 87609

www.bergab.ru Берг АБ bergab@ya.ru Тел. (495)-228-06-21, факс (495) 223-3071

www.bergab.ru Берг АБ bergab@ya.ru Тел. (495)-228-06-21, факс (495) 223-3071

X	SKF
1504	VKPC 82224
1510	VKPC 81803
1512	VKPC 97201
1513	VKPC 97200
1515	VKPC 92208
1516	VKPC 92810
1523	VKPC 82214
1524	VKPA 82440
1525	VKPC 86604
1527	VKPC 86201
1530	VKPC 81210
1539	VKPC 82437
1540	VKPC 82665
1541	VKPC 82646
1543	VKPC 81802
1544	VKPC 82441
1545	VKPC 82645
1549	VKPC 88829
1554	VKPC 81406
1555	VKPC 82246
1559	VKPC 86630
1561	VKPC 84613
1562	VKPC 84620
1563	VKPC 83636
1564	VKPC 83635
1565	VKPC 81620
1567	VKPC 92926
1568	VKPC 88836
1569	VKPC 81405
1572	VKPA 82429
1573	VKPA 82618
1575	VKPA 82210
1577	VKPC 86216
1578	VKPC 86415
1579	VKPC 83420
1580	VKPC 83639
1581	VKPC 81407
1582	VKPC 81215
1583	VKPC 81411
1584	VKPC 86631
1585	VKPC 86215
1586	VKPC 84216
1587	VKPC 83810
1588	VKPC 81408
1589	VKPA 82670
1590	VKPA 82671
1593	VKPC 86618
1595	VKPC 82665
1596	VKPC 81625
1597	VKPC 81624
1599	VKPC 81402
1600	VKPC 83430
1601	VKPC 83811
1602	VKPC 82247
1603	VKPC 82249
1604	VKPC 86217
1608	VKPA 81402
2300	VKPC 82631
4049	VKPC 94002
4068	VKPC 94434
4084	VKPC 84406
4085	VKPC 84407
4104	VKPC 84215
4115	VKPC 84415
5029	VKPC 96212
5058	VKPC 96210
5079	VKPC 85613
7108	VKPC 95010

X	SKF
7114	VKPC 95422
7115	VKPC 95008
7118	VKPC 95611
7120	VKPC 95602
9015	VKPC 91402
9017	VKPC 91616
9018	VKPC 91403
9025	VKPC 99403
9026	VKPC 92203
9035	VKPC 93405
9045	VKPA 91431
9050	VKPC 94202
9057	VKPA 91409
9059	VKPC 91405
9060	VKPC 94423
9061	VKPC 81607
9063	VKPC 92601
9064	VKPC 91419
9074	VKPC 92821
9083	VKPC 93410
9097	VKPC 87610
9098	VKPC 91413
9099	VKPC 91613
9111	VKPC 94423
9140	VKPC 91604
9141	VKPC 91617
9145	VKPC 91804
9150	VKPC 81609
9161	VKPC 99406
9166	VKPC 94612
9207	VKPC 92406
9209	VKPC 93601
9213	VKPC 92412
9214	VKPC 92408
9222	VKPC 88825
9223	VKPC 99407
9229	VKPC 88820
9230	VKPC 88818
9250	VKPC 93411
9259	VKPC 94602
9262	VKPC 81611
9263	VKPC 81800
9274	VKPC 86619
9276	VKPC 88831
9279	VKPC 81612
9312	VKPC 88828
9318	VKPC 94603
9332	VKPC 88830
9335	VKPC 81615
9346	VKPC 88835
9367	VKPA 91417

AQUAPLUS (TEMOT)

85-0140	VKPC 88600
85-0240	**VKPC 88803**
85-0275	**VKPC 88807**
85-0280	**VKPC 88807**
85-0290	**VKPC 88807**
85-0500	**VKPC 87203**
85-0530	**VKPC 84400**
85-0730	VKPC 85200
85-0760	**VKPC 85600**
85-0800	**VKPC 83203**
85-0870	**VKPA 86200**
85-1010	**VKPC 86607**
85-1015	**VKPC 86609**

X	SKF
85-1065	**VKPC 84609**
85-1070	**VKPC 84600**
85-1075	**VKPC 84208**
85-1085	**VKPC 84403**
85-1090	**VKPC 84607**
85-1095	**VKPC 84601**
85-1120	**VKPC 84201**
85-1130	VKPA 86403
85-1140	**VKPA 82202**
85-1150	VKPA 82206
85-1160	**VKPC 88609**
85-1180	**VKPC 81400**
85-1185	**VKPA 81400**
85-1200	**VKPC 83200**
85-1210	VKPC 82200
85-1220	**VKPC 85203**
85-1225	**VKPC 82623**
85-1240	**VKPC 82420**
85-1250	**VKPC 82616**
85-1255	**VKPC 82214**
85-1265	**VKPA 82222**
85-1270	VKPC 82416
85-1275	**VKPC 82604**
85-1280	**VKPC 86205**
85-1285	**VKPC 86413**
85-1300	VKPC 86410
85-1305	**VKPC 86603**
85-1310	**VKPC 83206**
85-1315	**VKPC 86603**
85-1320	**VKPC 81200**
85-1325	**VKPC 86623**
85-1340	**VKPC 86610**
85-1360	**VKPC 81601**
85-1380	**VKPC 88813**
85-1390	**VKPC 84205**
85-1440	**VKPC 82404**
85-1470	**VKPA 85605**
85-1480	**VKPC 85201**
85-1520	VKPC 93207
85-1540	**VKPC 95008**
85-1545	**VKPC 95611**
85-1570	**VKPC 84608**
85-1580	**VKPC 85202**
85-1590	**VKPC 86401**
85-1600	**VKPC 86407**
85-1610	**VKPC 82410**
85-1620	**VKPC 81605**
85-1630	**VKPC 81602**
85-1640	**VKPC 81605**
85-1650	VKPC 88603
85-1670	**VKPC 88605**
85-1680	**VKPC 84207**
85-1690	**VKPC 85406**
85-1695	**VKPC 85408**
85-1700	**VKPC 85400**
85-1705	**VKPC 85407**
85-1715	**VKPC 85603**
85-1720	**VKPC 85600**
85-1725	VKPA 85609
85-1730	**VKPC 88802**
85-1735	**VKPC 85401**
85-1740	**VKPA 85608**

www.bergab.ru Берг АБ bergab@ya.ru Тел. (495)-228-06-21, факс (495) 223-3071

www.bergab.ru Берг АБ bergab@ya.ru Тел. (495)-228-06-21, факс (495) 223-3071

X	SKF
85-1750	**VKPC 86405**
85-1760	**VKPC 86202**
85-1770	**VKPA 86206**
85-1790	**VKPC 82201**
85-1830	**VKPC 88610**
85-1840	**VKPC 88613**
85-1860	**VKPC 88604**
85-1870	**VKPC 88608**
85-1890	**VKPC 81401**
85-1895	**VKPA 81401**
85-1900	VKPC 88817
85-1910	**VKPC 88818**
85-1920	**VKPC 88620**
85-1930	**VKPC 88810**
85-1950	**VKPC 82206**
85-1960	**VKPC 82208**
85-1970	VKPC 82413
85-1980	**VKPC 93405**
85-1990	VKPC 93409
85-2010	**VKPC 93205**
85-2030	**VKPC 94202**
85-2060	**VKPC 95611**
85-2080	VKPC 92201
85-2085	**VKPC 92802**
85-2095	VKPC 92420
85-2100	VKPC 92207
85-2140	VKPC 99403
85-2145	**VKPC 99406**
85-2160	**VKPC 91431**
85-2170	VKPC 91403
85-2175	**VKPC 91405**
85-2180	**VKPC 91424**
85-2185	**VKPC 91402**
85-2190	**VKPC 91428**
85-2195	VKPC 91616
85-2200	**VKPC 83401**
85-2205	**VKPC 91404**
85-2210	**VKPC 95004**
85-2220	**VKPC 92204**
85-2225	**VKPC 83205**
85-2230	**VKPC 91409**
85-2240	**VKPC 85206**
85-2250	**VKPC 88808**
85-2260	**VKPC 88804**
85-2290	**VKPC 81606**
85-2295	**VKPC 88611**
85-2300	**VKPC 88607**
85-2305	**VKPC 88612**
85-2310	**VKPC 84209**
85-2315	**VKPC 84409**
85-2320	**VKPC 84610**
85-2325	**VKPC 84405**
85-2330	**VKPC 83604**
85-2335	**VKPC 83423**
85-2345	**VKPC 85403**
85-2350	**VKPC 85610**
85-2355	**VKPC 81206**
85-2365	VKPC 81610
85-2375	**VKPC 81609**
85-2385	**VKPC 88614**
85-2390	VKPC 82423
85-2395	VKPC 82633

X	SKF
85-2400	**VKPC 82632**
85-2405	**VKPC 82800**
85-2410	VKPC 82636
85-2420	**VKPC 83424**
85-2425	**VKPC 97000**
85-2450	**VKPC 82606**
85-2465	VKPA 82620
85-2470	**VKPA 82210**
85-2475	**VKPA 82220**
85-2485	**VKPA 82608**
85-2490	**VKPC 82224**
85-2500	**VKPC 82216**
85-2505	**VKPC 82432**
85-2510	**VKPA 82429**
85-2515	**VKPA 82618**
85-2520	**VKPC 82434**
85-2525	**VKPC 82218**
85-2530	**VKPA 82428**
85-2535	**VKPC 82426**
85-2540	**VKPC 93410**
85-2550	**VKPC 93600**
85-2560	**VKPC 87404**
85-2565	VKPC 93413
85-2570	VKPC 93602
85-2575	**VKPC 82622**
85-2580	VKPA 82626
85-2585	**VKPC 82626**
85-2590	**VKPC 94002**
85-2595	**VKPC 94452**
85-2610	**VKPC 94424**
85-2615	**VKPC 92404**
85-2620	**VKPC 92205**
85-2645	**VKPC 96204**
85-2650	**VKPC 96212**
85-2660	**VKPC 91613**
85-2665	**VKPC 91604**
85-2670	**VKPC 91415**
85-2675	**VKPC 91606**
85-2680	**VKPC 91413**
85-2685	**VKPC 81607**
85-2690	**VKPC 81204**
85-2695	**VKPC 88617**
85-2700	**VKPC 88616**
85-2705	**VKPC 81612**
85-2710	**VKPC 88816**
85-2720	**VKPC 84210**
85-2725	**VKPC 85404**
85-2730	**VKPC 81803**
85-2740	**VKPC 88809**
85-2745	**VKPC 84618**
85-2755	VKPA 82224
85-2760	**VKPC 82647**
85-2765	**VKPA 82202**
85-2770	**VKPA 82648**
85-2775	**VKPC 88826**
85-2780	**VKPC 82201**
85-2790	**VKPC 82621**
85-2795	**VKPC 88615**
85-2805	**VKPC 83424**
85-2815	**VKPC 83617**
85-2820	**VKPC 83420**
85-2835	**VKPC 82424**

X	SKF
85-2845	**VKPC 84411**
85-2860	VKPC 88820
85-2880	**VKPC 95424**
85-2895	**VKPC 92630**
85-2900	**VKPC 92408**
85-2905	**VKPC 92412**
85-2925	**VKPC 92810**
85-2930	**VKPC 92406**
85-2940	**VKPC 83615**
85-2945	**VKPC 86409**
85-2950	**VKPC 82419**
85-2955	**VKPC 96210**
85-2960	**VKPC 96402**
85-2965	**VKPC 85611**
85-2970	**VKPC 86619**
85-2980	**VKPC 88622**
85-2985	**VKPC 88821**
85-2990	**VKPC 88827**
85-2995	**VKPC 88824**
85-3000	**VKPC 88828**
85-3005	**VKPC 85409**
85-3030	**VKPC 81800**
85-3035	**VKPC 84410**
85-3040	**VKPC 86618**
85-3045	**VKPC 85404**
85-3065	**VKPC 82629**
85-3095	**VKPA 82648**
85-3100	**VKPC 85211**
85-3105	**VKPC 82660**
85-3110	**VKPC 84407**
85-3120	**VKPC 92208**
85-3125	**VKPC 83428**
85-3130	**VKPA 86212**
85-3135	**VKPA 86217**
85-3140	**VKPC 84408**
85-3145	**VKPC 84412**
85-3155	**VKPC 88625**
85-3160	**VKPC 81802**
85-3165	**VKPC 88831**
85-3170	**VKPC 83425**
85-3175	**VKPC 82638**
85-3180	**VKPA 82653**
85-3185	**VKPA 82230**
85-3190	**VKPC 84409**
85-3195	**VKPC 84406**
85-3200	**VKPC 86601**
85-3205	**VKPC 82630**
85-3210	**VKPC 86606**
85-3215	**VKPC 86615**
85-3220	**VKPC 86616**
85-3225	**VKPC 86402**
85-3230	**VKPC 82616**
85-3240	VKPC 82418
85-3245	**VKPC 82245**
85-3250	**VKPC 83630**
85-3255	**VKPA 82634**
85-3260	**VKPC 82600**
85-3270	VKPC 87814
85-3290	**VKPC 82646**
85-3300	**VKPC 82665**
85-3310	**VKPC 92601**
85-3315	**VKPC 81206**

www.bergab.ru Берг АБ bergab@ya.ru Тел. (495)-228-06-21, факс (495) 223-3071

X	SKF
85-3320	**VKPC 86413**
85-3335	**VKPA 81402**
85-3340	**VKPC 81615**
85-3345	**VKPC 88828**
85-3350	**VKPC 82645**
85-3355	**VKPA 82441**
85-3360	**VKPA 82240**
85-3365	**VKPC 82437**
85-3370	**VKPC 82412**
85-3375	**VKPC 81210**
85-3380	**VKPC 88836**
85-3385	**VKPC 88824**
85-3390	**VKPC 81611**
85-3395	**VKPC 84215**
85-3400	VKPC 82451
85-3405	**VKPC 82645**
85-3410	**VKPA 82666**
85-3415	**VKPC 81408**
85-3420	**VKPC 81620**
85-3425	**VKPC 81623**
85-3430	**VKPC 83810**
85-3435	**VKPC 83635**
85-3440	**VKPC 83636**
85-3450	**VKPC 90200**
85-3455	**VKPA 82248**
85-3460	**VKPC 84216**
85-3465	**VKPC 84409**
85-3470	**VKPC 93410**
85-3475	**VKPC 93601**
85-3500	**VKPC 95612**
85-3505	**VKPC 95423**
85-3510	**VKPC 85613**
85-3515	**VKPC 85622**
85-3520	**VKPC 85623**
85-3540	**VKPC 86216**
85-3545	**VKPC 86415**
85-3550	**VKPC 82249**
85-3555	**VKPA 83432**
85-3560	**VKPA 83431**
85-3565	**VKPA 82670**
85-3570	**VKPC 82652**
85-3590	**VKPC 81622**
85-3595	**VKPC 81407**
85-3600	**VKPC 81411**
85-4010	**VKPA 82218**
85-4015	**VKPC 84600**
85-4025	**VKPC 92650**
85-4030	**VKPC 92823**
85-4040	**VKPC 91607**
85-4045	**VKPC 91416**
85-4050	**VKPC 92651**
85-4055	**VKPC 87610**
85-4060	VKPC 92821
85-4065	**VKPC 91427**
85-4075	**VKPC 92209**
85-4080	**VKPC 88206**
85-4085	**VKPC 85624**
85-4090	**VKPC 81623**
85-4140	**VKPC 84603**
85-4155	**VKPC 83607**
85-4160	**VKPC 83612**
85-4185	VKPC 84206

X	SKF
85-4200	**VKPC 83616**
85-4205	VKPC 87206
85-4215	**VKPC 99404**
85-4220	**VKPC 84616**
85-4235	**VKPC 84205**
85-4240	**VKPC 83618**
85-4245	**VKPC 83403**
85-4255	VKPC 83623
85-4260	**VKPC 83603**
85-4265	**VKPC 83605**
85-4275	**VKPC 87205**
85-4280	VKPC 87207
85-4290	**VKPC 92203**
85-4300	VKPC 83614
85-4305	**VKPC 84611**
85-4330	**VKPC 84612**
85-4335	**VKPC 86622**
85-4340	**VKPC 86614**
85-4350	**VKPC 84617**
85-4355	**VKPC 88203**
85-4360	**VKPC 87403**
85-4365	VKPC 86612
85-4375	**VKPC 86408**
85-4380	**VKPA 82429**
85-4395	**VKPC 84613**
85-4400	VKPA 82620
85-4405	**VKPC 87400**
85-4410	**VKPC 87401**
85-4415	**VKPC 91804**
85-4420	**VKPA 86206**
85-4430	**VKPA 82653**
85-4435	**VKPC 86212**
85-4440	**VKPA 86217**
85-4445	**VKPC 82441**
85-4450	**VKPC 81401**
85-4455	**VKPA 83432**
85-4460	**VKPA 83431**
85-4465	**VKPC 81624**
85-4470	**VKPC 82665**
85-4475	**VKPA 82618**
85-4480	**VKPA 82440**
85-4485	**VKPC 82247**
85-4490	**VKPC 82665**
85-4500	**VKPC 82643**
85-4505	**VKPC 81215**
85-4510	**VKPC 85220**
85-4545	**VKPC 87813**
85-4550	**VKPC 86630**
85-4560	**VKPC 88830**
85-4580	**VKPC 90402**
85-4595	**VKPC 88631**
85-4600	**VKPC 88847**
85-4605	**VKPC 88846**
85-4610	**VKPC 88843**
85-4615	**VKPC 88844**
85-4620	**VKPC 88632**
85-4630	**VKPC 86633**
85-4635	**VKPC 86416**
85-4645	**VKPC 91442**
85-4670	VKPC 83411
85-4720	**VKPC 91414**
85-4740	**VKPC 87835**

X	SKF
85-4780	**VKPC 94434**
85-4795	**VKPC 97200**
85-4800	**VKPC 97201**
85-4805	**VKPC 87816**
85-4810	**VKPC 81405**
85-4835	**VKPC 83637**
85-4905	**VKPC 86215**
85-4915	**VKPC 83430**
85-4925	**VKPC 81807**
85-4930	**VKPC 81625**
85-4935	**VKPC 88829**
85-4960	**VKPC 90202**
85-5000	**VKPC 81620**
85-5015	**VKPA 82429**

BUGATTI

PA0005	VKPC 82422
PA0006	VKPC 82425
PA0007	**VKPC 82404**
PA0009	VKPC 82402
PA0010	**VKPA 82202**
PA0011	VKPA 82206
PA0011S	**VKPC 82206**
PA0012	VKPC 82400
PA0013	**VKPC 82412**
PA0014	VKPC 82406
PA0015	**VKPC 83607**
PA0017	**VKPC 82405**
PA0018	**VKPC 82208**
PA0019	**VKPA 82222**
PA0020	**VKPC 82606**
PA0021	**VKPC 82630**
PA0022	**VKPA 82410**
PA0022S	**VKPC 82410**
PA0023	VKPC 82414
PA0024S	**VKPC 82413**
PA0025	VKPC 82602
PA0026	**VKPC 83617**
PA0027	**VKPC 82424**
PA0028	VKPC 82416
PA0029	VKPA 82604
PA0029S	**VKPC 82604**
PA0030	**VKPC 82600**
PA0032	VKPC 82408
PA0033	VKPC 82418
PA0034	**VKPC 82420**
PA0035	**VKPC 82614**
PA0037	**VKPA 82608**
PA0037S	**VKPC 82608**
PA0038	**VKPC 82616**
PA0039	**VKPC 82631**
PA0040	**VKPC 88200**
PA0042	**VKPC 88203**
PA0045	VKPC 88204
PA0046	VKPC 88205
PA0051	VKPC 83405
PA0052	**VKPC 83406**
PA0055	**VKPC 83203**
PA0056	VKPC 83204
PA0057	**VKPC 83200**
PA0058	VKPC 83409

www.bergab.ru Берг АБ bergab@ya.ru Тел. (495)-228-06-21, факс (495) 223-3071

X	SKF
PA0059	VKPC 83408
PA0060	**VKPC 83613**
PA0062	**VKPC 83614**
PA0063	VKPC 83402
PA0064	**VKPC 83612**
PA0065	**VKPC 83605**
PA0065	**VKPC 83616**
PA0067	VKPC 83623
PA0069	**VKPC 83618**
PA0070	**VKPC 83403**
PA0071	**VKPC 83401**
PA0072	**VKPC 83603**
PA0075	**VKPC 83423**
PA0076	**VKPC 83622**
PA0077	VKPC 83620
PA0080	VKPA 85609
PA0081	**VKPC 85600**
PA0082	VKPC 85200
PA0083	**VKPA 85605**
PA0085	**VKPC 85203**
PA0091	**VKPC 85202**
PA0092	**VKPC 85201**
PA0093	**VKPC 85600**
PA0094	VKPA 85606
PA0095	**VKPC 85400**
PA0098	**VKPC 85406**
PA0099	**VKPC 85206**
PA0100	**VKPA 85608**
PA0102	**VKPC 83412**
PA0105	**VKPC 83206**
PA0106	VKPC 83411
PA0115	**VKPA 93204**
PA0115P	**VKPA 93204**
PA0116	**VKPC 93402**
PA0116P	**VKPC 93402**
PA0117	**VKPA 93403**
PA0117P	**VKPC 93403**
PA0120	VKPC 92201
PA0121	VKPC 92207
PA0122	**VKPC 92802**
PA0132	**VKPC 88803**
PA0135	**VKPC 88807**
PA0136	**VKPC 88606**
PA0137	**VKPC 88805**
PA0138	**VKPC 88813**
PA0139	**VKPC 88812**
PA0140	**VKPC 88604**
PA0141	**VKPC 88613**
PA0142	**VKPC 88608**
PA0143	**VKPC 88619**
PA0144	**VKPC 88810**
PA0145	**VKPC 88810**
PA0146	**VKPC 88620**
PA0147	**VKPC 88804**
PA0148	**VKPC 88818**
PA0156	**VKPC 83626**
PA0171	**VKPC 86200**
PA0172	**VKPA 86200**
PA0173	**VKPC 86203**
PA0174	**VKPC 86403**
PA0176	VKPC 86410
PA0177	**VKPC 86202**

X	SKF
PA0180	**VKPC 86201**
PA0182	VKPC 86411
PA0183	**VKPC 86401**
PA0186	**VKPC 86405**
PA0188	**VKPC 86602**
PA0189	**VKPA 86206**
PA0189	**VKPC 86206**
PA0190	**VKPC 86601**
PA0190	**VKPC 86623**
PA0193	**VKPC 86604**
PA0193	**VKPC 86622**
PA0194	**VKPC 86402**
PA0195	**VKPC 86603**
PA0196	VKPC 86211
PA0199P	**VKPA 86407**
PA0200	VKPC 88600
PA0201	VKPC 88800
PA0203	**VKPC 88609**
PA0204	VKPC 88602
PA0205	VKPC 88603
PA0207	**VKPC 88802**
PA0209	**VKPC 88610**
PA0210	**VKPC 88614**
PA0211	**VKPC 88605**
PA0212	**VKPC 88607**
PA0213	**VKPC 88612**
PA0214	**VKPC 88611**
PA0221	**VKPC 84200**
PA0222	**VKPC 84201**
PA0223	**VKPC 84400**
PA0226	**VKPC 84600**
PA0228	VKPC 84606
PA0229	**VKPC 84603**
PA0230	**VKPC 84607**
PA0231	**VKPC 84205**
PA0233	**VKPC 84608**
PA0234R	**VKPC 84207**
PA0236	**VKPC 84616**
PA0237	VKPC 84202
PA0238	**VKPC 84610**
PA0239	**VKPC 84403**
PA0240	**VKPC 84601**
PA0241	**VKPC 84617**
PA0242	**VKPC 84609**
PA0243	**VKPC 84208**
PA0245	**VKPC 84405**
PA0246	**VKPC 84209**
PA0247	**VKPC 84404**
PA0247	**VKPC 84620**
PA0249	**VKPC 87600**
PA0252T	**VKPC 87200**
PA0253	**VKPC 87203**
PA0256	**VKPC 87202**
PA0257	**VKPC 87205**
PA0258	**VKPC 87207**
PA0259	**VKPC 87403**
PA0261	VKPC 82200
PA0263	VKPC 82403
PA0264	**VKPC 82421**
PA0265	VKPC 82417
PA0266	**VKPC 82201**
PA0269	**VKPC 82609**

X	SKF
PA0270	VKPA 82621
PA0272	**VKPC 82623**
PA0273	**VKPC 82621**
PA0274	VKPC 82633
PA0277	VKPC 82411
PA0278	**VKPC 82216**
PA0279	**VKPC 82214**
PA0280	**VKPC 82622**
PA0281	VKPA 82624
PA0282	VKPA 82617
PA0283	**VKPC 86612**
PA0284	**VKPC 86614**
PA0285	**VKPC 86609**
PA0288	**VKPC 86607**
PA0290	**VKPC 86610**
PA0293	**VKPA 82202**
PA0298	VKPC 83417
PA0299	**VKPC 83416**
PA0301	**VKPC 85207**
PA0302	**VKPC 85204**
PA0307	**VKPA 93207**
PA0308	**VKPC 93205**
PA0311	VKPC 81403
PA0313	**VKPC 81200**
PA0315	**VKPC 81601**
PA0316	**VKPC 81605**
PA0317	**VKPC 81602**
PA0319	**VKPC 81401**
PA0319C	**VKPA 81401**
PA0320	**VKPC 81400**
PA0320C	**VKPA 81400**
PA0321	**VKPC 81607**
PA0323	**VKPC 81609**
PA0324	**VKPC 81608**
PA0325	**VKPC 81606**
PA0326	**VKPC 81206**
PA0327	VKPC 81610
PA0336	**VKPC 94400**
PA0337	**VKPC 94200**
PA0350	**VKPC 84611**
PA0351	**VKPC 84612**
PA0360	**VKPC 82404**
PA0363	**VKPC 82419**
PA0364	VKPC 82415
PA0385	VKPC 99400
PA0502	**VKPC 82205**
PA0503	**VKPC 82204**
PA0506	VKPA 82426
PA0506S	**VKPC 82426**
PA0507	**VKPA 82210**
PA0507S	**VKPC 82210**
PA0508	**VKPA 82220**
PA0509	**VKPA 82428**
PA0509S	**VKPC 82428**
PA0510	**VKPA 82218**
PA0510S	**VKPC 82218**
PA0511	VKPA 82610
PA0512	**VKPA 82224**
PA0512S	**VKPC 82224**
PA0513	**VKPA 82431**
PA0513S	**VKPC 82431**
PA0514S	**VKPC 82434**

www.bergab.ru Берг АБ bergab@ya.ru Тел. (495)-228-06-21, факс (495) 223-3071

X	SKF
PA0514S	**VKPC 82434**
PA0515	**VKPA 82429**
PA0515S	**VKPC 82429**
PA0516	**VKPA 82618**
PA0516S	**VKPC 82618**
PA0517	VKPA 82620
PA0519	**VKPC 82432**
PA0527	**VKPC 82424**
PA0529S	**VKPC 82604**
PA0537	**VKPA 82608**
PA0537S	**VKPC 82608**
PA0601	**VKPC 91400**
PA0609	VKPC 91403
PA0610	VKPC 91616
PA0611	**VKPC 91402**
PA0612	**VKPC 91200**
PA1050	VKPC 83621
PA1051	**VKPC 83604**
PA1053	**VKPC 83615**
PA1080	**VKPC 85407**
PA1081	**VKPC 85408**
PA1082	**VKPC 85401**
PA1083	**VKPC 85603**
PA1084	**VKPC 85403**
PA1085	**VKPC 85610**
PA1171	**VKPC 86205**
PA1172	**VKPC 86409**
PA1173	**VKPC 86408**
PA1174	VKPA 86403
PA1175	**VKPC 86208**
PA1260	**VKPC 82423**
PA1261	**VKPC 82632**
PA1262	**VKPC 82800**
PA1263	VKPC 82636
PA1275	VKPA 82628
PA1276	**VKPA 82626**
PA1276S	**VKPC 82626**
PA5001	**VKPC 82637**
PA5002	**VKPC 82621**
PA5003	**VKPC 82436**
PA5005	VKPC 82635
PA5006	**VKPC 82201**
PA5007	**VKPC 82660**
PA5009	**VKPC 82645**
PA5010	VKPC 82451
PA5013	**VKPC 82662**
PA5101	**VKPC 81603**
PA5102	**VKPC 81612**
PA5103	**VKPC 81800**
PA5104	**VKPC 81805**
PA5106	**VKPC 86619**
PA5107	**VKPA 81402**
PA5108	**VKPC 81615**
PA5109	**VKPC 81402**
PA5110	**VKPC 81802**
PA5112	**VKPC 81408**
PA5113	**VKPC 81620**
PA5114	**VKPC 81623**
PA5115	**VKPC 81625**
PA5116	**VKPC 81623**
PA5201	**VKPC 87404**
PA5202	**VKPC 87400**

X	SKF
PA5203	**VKPC 87401**
PA5204	**VKPC 87813**
PA5205	**VKPC 93601**
PA5206	VKPC 87814
PA5207	**VKPC 87607**
PA5208	**VKPC 87816**
PA5302	**VKPC 85609**
PA5302	**VKPC 85612**
PA5305	VKPC 85205
PA5401	**VKPC 88617**
PA5402	**VKPC 88616**
PA5403	**VKPC 88615**
PA5404	**VKPC 88826**
PA5405	**VKPC 88831**
PA5407	**VKPC 88830**
PA5408	**VKPC 88829**
PA5501	**VKPC 83420**
PA5502	**VKPC 83424**
PA5503	**VKPC 83617**
PA5504	**VKPC 83205**
PA5505	**VKPC 83635**
PA5506	**VKPC 83636**
PA5508	**VKPC 83811**
PA5702	**VKPC 97200**
PA5703	**VKPC 97201**
PA5901	**VKPC 82440**
PA5902	**VKPA 82440**
PA5903	**VKPC 82643**
PA5904	**VKPA 82634**
PA5905	VKPA 82224
PA5906	**VKPC 82224**
PA5907	**VKPC 82647**
PA5908	**VKPA 82202**
PA5909	**VKPA 82648**
PA5910	**VKPA 82618**
PA5910	**VKPC 82620**
PA5911	**VKPC 82638**
PA5912	**VKPC 82230**
PA5913	**VKPA 82230**
PA5913	**VKPC 82245**
PA5914	**VKPC 82653**
PA5915	**VKPA 82653**
PA5917	**VKPC 82450**
PA5918	**VKPC 82432**
PA5919	**VKPC 82650**
PA5920	**VKPC 82651**
PA5921	VKPC 82649
PA5922	**VKPC 82652**
PA5923	**VKPC 82437**
PA5924	**VKPA 82441**
PA5925	**VKPA 82441**
PA5926	**VKPC 82646**
PA5927	**VKPC 82662**
PA5928	**VKPA 82240**
PA5929	**VKPC 82240**
PA5930	**VKPA 82429**
PA5934	**VKPC 82249**
PA5935	**VKPC 82247**
PA5937	**VKPA 82246**
PA5939	**VKPA 82670**
PA5941	**VKPA 82671**
PA5942	**VKPC 82250**

X	SKF
PA5943	**VKPC 82249**
PA5945	**VKPC 82214**
PA6001	**VKPC 84210**
PA6002	**VKPC 84411**
PA6003	**VKPC 84618**
PA6004	**VKPC 84406**
PA6005	**VKPC 84408**
PA6006	**VKPC 84409**
PA6007	**VKPC 84412**
PA6008	**VKPC 84410**
PA6009	**VKPC 84407**
PA6010	**VKPC 84215**
PA6011	**VKPC 84216**
PA6013	**VKPC 84415**
PA6201	**VKPC 93405**
PA6202	**VKPC 93409**
PA6203	**VKPC 93410**
PA6401	**VKPC 88203**
PA6501	**VKPC 82629**
PA6701	**VKPC 94202**
PA6703	**VKPC 94002**
PA6801	**VKPC 88619**
PA6802	**VKPC 88816**
PA6803	**VKPC 88809**
PA6804	**VKPC 88808**
PA6805	**VKPC 88619**
PA6807	**VKPC 88827**
PA6808	**VKPC 88622**
PA6810	VKPC 88820
PA6811	**VKPC 88824**
PA6814	**VKPC 88625**
PA6815	**VKPC 88835**
PA6816	**VKPC 88821**
PA6816	**VKPC 88828**
PA6817	**VKPC 88825**
PA6818	**VKPC 88631**
PA6821	**VKPC 88844**
PA6904	**VKPC 95423**
PA7101	**VKPC 92204**
PA7101	**VKPC 92209**
PA7102	**VKPC 92408**
PA7103	**VKPC 92412**
PA7104	**VKPC 92205**
PA7105	**VKPC 92401**
PA7106	**VKPC 92404**
PA7107	**VKPC 92601**
PA7108	**VKPC 92406**
PA7109	**VKPC 92208**
PA7110	**VKPC 92209**
PA7111	**VKPC 92408**
PA7201	**VKPC 85404**
PA7201	**VKPC 85410**
PA7202	**VKPC 85611**
PA7203	**VKPC 85607**
PA7203	**VKPC 85409**
PA7204	**VKPC 85211**
PA7205	**VKPC 85404**
PA7207	**VKPC 85620**
PA7209	**VKPC 85613**
PA7210	**VKPC 85621**
PA7212	**VKPC 85622**
PA7213	**VKPC 85624**

www.bergab.ru Берг АБ bergab@ya.ru Тел. (495)-228-06-21, факс (495) 223-3071

X	SKF
PA7401	**VKPC 83628**
PA7402	**VKPC 83630**
PA7403	**VKPC 83424**
PA7404	**VKPC 83428**
PA7405	**VKPC 83425**
PA7406	**VKPC 83810**
PA7408	**VKPC 83428**
PA7701	**VKPC 86413**
PA7702	**VKPC 86408**
PA7703	**VKPC 86603**
PA7704	**VKPC 86621**
PA7705	**VKPC 86604**
PA7706	VKPC 86204
PA7707	**VKPC 86601**
PA7708	**VKPC 86206**
PA7708	**VKPC 86212**
PA7709	**VKPC 86209**
PA7710	**VKPC 86615**
PA7711	**VKPC 86616**
PA7712	**VKPC 86606**
PA7713	**VKPC 86631**
PA7714	**VKPC 86415**
PA7715	**VKPC 86216**
PA7716	**VKPC 86633**
PA7717	**VKPC 86215**
PA7718	**VKPC 86416**
PA7801	**VKPC 84612**
PA7901	**VKPC 82435**
PA7902	**VKPA 82435**
PA8101	**VKPC 99407**
PA8401	**VKPC 83415**
PA8506	**VKPA 91417**
PA8701	**VKPC 81803**
PA8702	**VKPC 81204**
PA8703	**VKPC 81206**
PA8704	**VKPC 81210**
PA8705	**VKPC 81611**
PA8706	**VKPC 81624**
PA8707	**VKPC 81215**
PA8708	**VKPC 81622**
PA8709	**VKPC 81411**
PA8710	**VKPC 81407**
PA8801	**VKPC 86618**
PA8802	**VKPC 86618**
PA8803	**VKPC 86618**
PA9201	**VKPC 95008**
PA9203	**VKPC 95424**
PA9204	**VKPC 95405**
PA9301	**VKPC 96212**

DELPHI (AP LOCKHEED)

X	SKF
WP1005	**VKPC 86208**
WP1007	**VKPC 87200**
WP1012	**VKPC 84201**
WP1013	**VKPC 88807**
WP1020	**VKPC 86202**
WP1022	**VKPA 86200**
WP1023	**VKPC 86200**
WP1025	**VKPC 86201**
WP1026	**VKPC 86403**
WP1029	**VKPC 83200**

X	SKF
WP1032	VKPA 86407
WP1033	**VKPC 86602**
WP1034	**VKPC 86402**
WP1035	**VKPA 86206**
WP1036	**VKPC 86413**
WP1038	**VKPC 86405**
WP1039	**VKPC 86623**
WP1040	**VKPC 86603**
WP1041	**VKPC 86622**
WP1050	**VKPC 82201**
WP1051	**VKPC 82621**
WP1052	**VKPC 88609**
WP1053	**VKPC 88605**
WP1055	**VKPC 88802**
WP1056	**VKPC 88610**
WP1059	**VKPA 82202**
WP1060	**VKPC 81412**
WP1062	VKPA 82206
WP1063	**VKPC 82208**
WP1064	**VKPA 82410**
WP1066	**VKPC 82630**
WP1067	**VKPC 82214**
WP1068	**VKPC 82419**
WP1069	**VKPC 84603**
WP1070	**VKPC 84403**
WP1071	**VKPC 84616**
WP1072	**VKPC 84617**
WP1073	**VKPC 84205**
WP1074	**VKPC 84600**
WP1075	**VKPC 84207**
WP1076	**VKPC 84208**
WP1077	**VKPC 84601**
WP1078	**VKPC 84601**
WP1081	**VKPC 88807**
WP1082	**VKPC 88813**
WP1084	**VKPC 88608**
WP1085	**VKPC 88620**
WP1086	**VKPC 85203**
WP1088	**VKPC 85201**
WP1089	**VKPC 85406**
WP1090	**VKPC 85400**
WP1091	**VKPC 85202**
WP1092	**VKPC 88200**
WP1093	**VKPC 81200**
WP1094	**VKPC 81400**
WP1096	**VKPC 81605**
WP1097	**VKPC 81401**
WP1098	**VKPC 81602**
WP1101	**VKPC 83206**
WP1102	**VKPC 83401**
WP1103	**VKPC 83203**
WP1107	**VKPC 83626**
WP1108	**VKPC 83607**
WP1109	**VKPC 83617**
WP1118	VKPC 83408
WP1119	VKPC 83409
WP1120	**VKPC 83622**
WP1121	VKPC 83620
WP1122	**VKPC 83612**
WP1123	**VKPC 83616**
WP1125	**VKPC 83618**
WP1126	**VKPC 83403**

X	SKF
WP1127	**VKPC 83624**
WP1128	**VKPC 83423**
WP1129	**VKPC 83603**
WP1130	**VKPC 83604**
WP1162	**VKPC 84209**
WP1254	**VKPC 82614**
WP1262	**VKPC 85206**
WP1291	**VKPC 85407**
WP1292	**VKPC 85401**
WP1293	**VKPC 85408**
WP1347	**VKPC 81606**
WP1365	**VKPC 82429**
WP1366	**VKPA 82618**
WP1370	**VKPC 84610**
WP1375	**VKPC 84618**
WP1410	**VKPC 82245**
WP1414	**VKPA 82608**
WP1415	**VKPA 82222**
WP1419	**VKPC 82631**
WP1420	**VKPC 84405**
WP1434	**VKPC 83630**
WP1435	**VKPA 82428**
WP1437	**VKPC 88619**
WP1440	**VKPC 82616**
WP1486	**VKPC 88203**
WP1487	**VKPC 82434**
WP1496	**VKPC 83615**
WP1506	**VKPC 86409**
WP1507	**VKPC 83424**
WP1508	**VKPA 82440**
WP1515	**VKPC 84210**
WP1518	**VKPC 85404**
WP1526	**VKPC 85403**
WP1528	VKPA 82426
WP1529	**VKPC 82420**
WP1530	VKPA 82224
WP1600	**VKPC 82224**
WP1601	**VKPC 83420**
WP1602	**VKPA 82202**
WP1603	**VKPC 83428**
WP1607	**VKPC 82647**
WP1608	VKPC 82649
WP1609	**VKPC 82650**
WP1610	**VKPC 82651**
WP1611	**VKPC 84406**
WP1612	**VKPC 88826**
WP1613	**VKPC 82638**
WP1614	**VKPC 84407**
WP1615	**VKPC 83625**
WP1617	**VKPC 88607**
WP1618	**VKPC 88614**
WP1619	**VKPC 88617**
WP1701	**VKPC 86610**
WP1702	**VKPC 83605**
WP1703	**VKPC 82606**
WP1706	**VKPC 84611**
WP1708	**VKPC 82622**
WP1711	**VKPC 80604**
WP1712	**VKPC 86609**
WP1713	**VKPC 85603**
WP1714	VKPC 82636
WP1715	**VKPC 91402**

www.bergab.ru Берг АБ bergab@ya.ru Тел. (495)-228-06-21, факс (495) 223-3071

X	SKF
WP1716	**VKPC 86205**
WP1717	**VKPC 88612**
WP1718	**VKPC 87403**
WP1719	**VKPC 93205**
WP1720	**VKPC 84620**
WP1721	**VKPC 84612**
WP1722	**VKPC 82424**
WP1723	**VKPC 82642**
WP1724	**VKPC 81603**
WP1725	**VKPC 81206**
WP1726	**VKPC 81803**
WP1727	**VKPC 81204**
WP1728	**VKPC 87400**
WP1729	**VKPC 87401**
WP1730	**VKPC 87404**
WP1731	**VKPC 88615**
WP1732	**VKPC 88616**
WP1733	**VKPC 92205**
WP1734	**VKPC 92404**
WP1735	**VKPC 92204**
WP1736	**VKPC 94002**
WP1738	**VKPC 88810**
WP1739	**VKPA 82648**
WP1742	**VKPC 92408**
WP1743	**VKPC 88809**
WP1745	**VKPC 86604**
WP1746	**VKPC 86603**
WP1747	**VKPC 86623**
WP1749	**VKPC 86212**
WP1751	**VKPC 86606**
WP1752	**VKPC 86615**
WP1753	**VKPC 86621**
WP1754	**VKPC 92208**
WP1755	**VKPC 92810**
WP1756	**VKPC 83425**
WP1757	**VKPC 94202**
WP1758	**VKPA 82653**
WP1759	**VKPC 86618**
WP1760	**VKPC 82208**
WP1761	**VKPC 93601**
WP1762	VKPC 87814
WP1763	**VKPC 87835**
WP1764	**VKPC 85404**
WP1765	**VKPC 85611**
WP1766	**VKPC 85409**
WP1767	**VKPC 88622**
WP1768	**VKPC 88625**
WP1769	VKPC 87206
WP1770	**VKPC 84409**
WP1771	**VKPC 84408**
WP1772	**VKPC 86619**
WP1773	**VKPC 83205**
WP1774	**VKPC 81210**
WP1775	**VKPC 82623**
WP1801	**VKPC 86206**
WP1802	**VKPC 86217**
WP1805	**VKPC 86631**
WP1806	**VKPC 86408**
WP1807	**VKPC 86603**
WP1808	**VKPC 86415**
WP1809	**VKPC 86212**
WP1810	**VKPC 82245**

X	SKF
WP1811	**VKPA 82671**
WP1812	**VKPC 82434**
WP1813	**VKPC 86630**
WP1814	**VKPC 84613**
WP1819	**VKPA 91441**
WP1820	**VKPA 91417**
WP1821	**VKPA 91441**
WP1822	**VKPC 86614**
WP1823	**VKPC 83617**
WP1824	**VKPA 82210**
WP1826	VKPA 82626
WP1827	**VKPC 86601**
WP1828	**VKPC 82618**
WP1829	VKPA 82620
WP1830	VKPA 82620
WP1831	**VKPC 82432**
WP1832	**VKPC 88611**
WP1833	**VKPC 82622**
WP1834	**VKPC 82629**
WP1835	**VKPC 85610**
WP1836	**VKPC 84411**
WP1837	**VKPC 82643**
WP1838	**VKPC 93410**
WP1839	**VKPC 82660**
WP1840	**VKPC 92412**
WP1841	**VKPC 86616**
WP1842	**VKPC 93415**
WP1843	**VKPC 85211**
WP1844	**VKPC 87607**
WP1845	**VKPC 87813**
WP1846	**VKPC 88824**
WP1847	**VKPC 84412**
WP1848	**VKPC 81612**
WP1849	**VKPA 82670**
WP1850	**VKPA 82429**
WP1851	**VKPC 82652**
WP1852	**VKPC 81615**
WP1853	**VKPC 92209**
WP1854	**VKPC 84215**
WP1855	**VKPC 82665**
WP1856	**VKPC 81802**
WP1857	**VKPC 82645**
WP1858	**VKPA 82441**
WP1859	**VKPC 86215**
WP1860	**VKPC 86216**
WP1861	**VKPC 84216**
WP1862	**VKPC 83636**
WP1863	**VKPC 83635**
WP1864	**VKPC 83810**
WP1865	**VKPC 81408**
WP1867	**VKPC 81411**
WP1868	**VKPC 81620**
WP1869	VKPC 81621
WP1870	**VKPA 82618**
WP1871	**VKPC 81805**
WP1872	**VKPC 85404**
WP1873	**VKPA 82666**
WP1874	**VKPC 93210**
WP1875	**VKPC 81407**
WP1876	**VKPC 81625**
WP1877	**VKPC 81215**
WP1879	**VKPC 81402**

X	SKF
WP1880	**VKPC 83811**
WP1881	**VKPC 82247**
WP1882	**VKPC 95008**
WP1883	**VKPC 95405**
WP1884	**VKPC 92412**
WP1885	**VKPC 88842**
WP1888	**VKPC 85622**
WP1889	**VKPC 92600**
WP1891	**VKPC 91405**
WP1892	**VKPC 86633**
WP1893	**VKPC 86416**
WP1894	**VKPC 85621**
WP1895	**VKPC 85220**
WP1896	**VKPC 85623**
WP1897	**VKPC 81623**
WP1898	**VKPC 82665**
WP1899	**VKPC 82246**
WP1900	**VKPC 94434**
WP1901	**VKPA 82666**
WP1902	VKPC 82451
WP1903	**VKPC 82249**
WP1904	**VKPC 83430**
WP1905	**VKPC 85613**
WP1906	**VKPC 92926**
WP1907	**VKPC 88836**
WP1910	**VKPA 82240**
WP2000	**VKPC 84200**
WP2024	VKPC 84202
WP2027	**VKPC 84608**
WP2030	**VKPC 84607**
WP2031	VKPC 93207
WP2036	VKPC 91412
WP2040	VKPC 84606
WP2042	**VKPA 85605**
WP2043	VKPC 88603
WP2045	**VKPA 85608**
WP2046	VKPC 88204
WP2050	**VKPC 86407**
WP2053	VKPC 82633
WP2055	**VKPA 82222**
WP2058	VKPC 82418
WP2060	**VKPC 84609**
WP2062	**VKPC 92802**
WP2063	VKPC 82416
WP2066	**VKPC 87203**
WP2072	**VKPC 93405**
WP2090	VKPC 99403
WP2091	VKPC 99405
WP2092	**VKPC 99404**
WP2105	**VKPA 82618**
WP2107	**VKPC 88613**
WP2108	**VKPA 91417**
WP2109	**VKPC 81601**
WP2110	**VKPC 81607**
WP2111	**VKPC 87600**
WP2113	**VKPC 88818**
WP2115	**VKPC 88827**
WP2117	VKPC 91616
WP2120	VKPC 83411
WP2127	**VKPC 82800**
WP2129	VKPC 81610
WP2130	**VKPA 82618**

www.bergab.ru Берг АБ bergab@ya.ru Тел. (495)-228-06-21, факс (495) 223-3071

X	SKF
WP2135	**VKPC 96212**
WP2139	**VKPA 82428**
WP2140	VKPC 88600
WP2159	**VKPC 81608**
WP2160	**VKPC 81609**
WP2164	**VKPC 88816**
WP2165	**VKPC 83628**
WP2166	**VKPC 82621**
WP2168	**VKPC 88808**
WP2169	**VKPA 81400**
WP2170	**VKPA 81401**
WP2171	**VKPC 82436**
WP2173	**VKPC 82632**
WP2174	**VKPC 81800**
WP2175	**VKPC 88831**
WP2176	**VKPC 97200**
WP2177	**VKPC 97201**
WP2180	**VKPA 82220**
WP2181	**VKPA 82230**
WP2182	**VKPC 82230**
WP2185	**VKPA 82410**
WP2188	**VKPC 82224**
WP2192	**VKPC 82600**
WP2199	**VKPC 95424**
WP2207	**VKPC 92406**
WP2212	**VKPC 99406**
WP2213	**VKPC 99407**
WP2217	**VKPC 96402**
WP2227	**VKPC 88604**
WP2228	VKPC 88820
WP2229	**VKPC 88821**
WP2234	**VKPC 86401**
WP2235	**VKPC 86623**
WP2237	**VKPC 87816**
WP2245	**VKPC 84411**
WP2253	**VKPC 82437**
WP2254	**VKPC 82646**
WP2265	**VKPA 81402**
WP2267	**VKPC 90200**
WP2269	**VKPA 82441**
WP2270	**VKPC 81611**
WP2275	**VKPC 95800**
WP2278	**VKPC 81405**
WP2279	**VKPC 81406**
WP2282	**VKPC 81624**
WP2285	**VKPC 88829**
WP2286	**VKPC 90202**
WP2287	**VKPC 90402**
WP2294	**VKPC 86630**
WP2296	**VKPC 81620**

DOLZ

X	SKF
A-121	**VKPC 87200**
A-130	**VKPC 82637**
A-133	**VKPC 82201**
A-134	VKPC 82417
A-135	VKPC 82403
A-136	**VKPC 82609**
A-137	VKPA 82621
A-138	**VKPC 82421**
A-139	VKPC 82200

X	SKF
A-140	**VKPC 82632**
A-141	VKPC 82636
A-142	VKPC 82635
A-144	**VKPC 82623**
A-145	**VKPC 82621**
A-146	VKPC 82633
A-147	VKPC 82423
A-148	**VKPC 82800**
A-149	**VKPC 82436**
A-150	**VKPC 81400**
A-151	**VKPC 81401**
A-152	**VKPC 81605**
A-154	**VKPC 81602**
A-156	**VKPC 81601**
A-157	VKPC 81403
A-158	**VKPC 81606**
A-159	**VKPC 81200**
A-160	**VKPA 81400**
A-161	**VKPA 81401**
A-162	VKPC 81610
A-164	**VKPC 81204**
A-165	**VKPC 81607**
A-167	**VKPC 81609**
A-169	**VKPC 81603**
A-170	**VKPC 81206**
A-171	**VKPC 81612**
A-172	**VKPC 81800**
A-174	**VKPC 81802**
A-176	**VKPC 81803**
A-178	**VKPC 86619**
A-179	**VKPC 81210**
A-180	**VKPC 81805**
A-181	**VKPC 81611**
A-182	**VKPC 81615**
A-183	**VKPC 81401**
A-184	**VKPA 81401**
A-185	**VKPC 81408**
A-186	**VKPC 81620**
A-187	VKPC 81621
A-188	**VKPC 81411**
A-189	**VKPC 81215**
A-190	**VKPC 81625**
A-191	**VKPC 81407**
A-192	**VKPC 81622**
A-223	**VKPC 81625**
A-230	**VKPC 82642**
A-242	VKPC 82635
B-114	**VKPC 82651**
B-201	VKPC 88600
B-202	**VKPC 88609**
B-203	VKPC 88800
B-204	**VKPC 88802**
B-205	VKPC 88603
B-206	**VKPC 88605**
B-207	**VKPC 88610**
B-208	VKPC 88602
B-210	**VKPC 88614**
B-211	**VKPC 88612**
B-212	**VKPC 88607**
B-213	**VKPC 88611**
B-214	**VKPC 88617**
B-215	**VKPC 88616**

X	SKF
B-216	**VKPC 88615**
B-219	**VKPC 88826**
C-100	VKPC 82425
C-101	VKPC 83606
C-102	**VKPC 83602**
C-104	**VKPC 83607**
C-106	**VKPC 83626**
C-107	**VKPC 83424**
C-110	**VKPC 83205**
C-111	**VKPC 83428**
C-112	**VKPC 83425**
C-113	**VKPC 83430**
C-115	**VKPC 83617**
C-116	**VKPC 83608**
C-117	**VKPC 83420**
C-118	**VKPC 83636**
C-119	**VKPC 83420**
C-125	**VKPC 83600**
C-126	VKPC 83627
C-130	**VKPC 83810**
C-131	**VKPC 83811**
D-210	**VKPC 90202**
D-211	**VKPC 90402**
D-212	**VKPC 90200**
D-213	**VKPC 90200**
F-101	**VKPC 84400**
F-105	**VKPC 84205**
F-106	**VKPC 84206**
F-107	**VKPC 84207**
F-109	**VKPC 84603**
F-110	**VKPC 84616**
F-111	**VKPC 84600**
F-112	**VKPC 84601**
F-114	**VKPC 84618**
F-115	**VKPC 84403**
F-116	VKPC 84606
F-117	**VKPC 84200**
F-118	**VKPC 84201**
F-120	**VKPC 84609**
F-121	**VKPC 84607**
F-122	**VKPC 84608**
F-124	**VKPC 84617**
F-125	**VKPC 84406**
F-126	**VKPC 84407**
F-127	**VKPC 84208**
F-128	VKPC 84202
F-129	**VKPC 84410**
F-130	**VKPC 84412**
F-131	**VKPC 84411**
F-133	**VKPC 84215**
F-134	**VKPC 84610**
F-135	**VKPC 84620**
F-136	**VKPC 84405**
F-137	**VKPC 84209**
F-139	**VKPC 84216**
F-145	**VKPC 84409**
F-146	**VKPC 84408**
F-147	**VKPC 84210**
F-155	**VKPC 84409**
F-160	**VKPC 85204**
F-161	VKPC 85205
F-162	**VKPC 85207**

www.bergab.ru Берг АБ bergab@ya.ru Тел. (495)-228-06-21, факс (495) 223-3071

X	SKF
F-196	**VKPC 85613**
F-197	**VKPC 84613**
F-198	**VKPC 84612**
F-199	**VKPC 84611**
F-200	**VKPC 86630**
H-101	**VKPA 93204**
H-102	**VKPA 93204**
H-103	**VKPA 93202**
H-104	**VKPC 93209**
H-105	**VKPC 93402**
H-106	**VKPC 93402**
H-107	**VKPC 93403**
H-108	**VKPA 93403**
H-110	**VKPA 93207**
H-112	**VKPC 93405**
H-117	**VKPC 93205**
L-109	**VKPC 87602**
L-110	**VKPC 87800**
L-111	**VKPC 87605**
L-113	**VKPC 87606**
L-116	**VKPC 87835**
L-120	**VKPC 88200**
L-121	**VKPC 88203**
L-122	**VKPA 88200**
L-123	**VKPC 88203**
L-131	VKPC 82411
L-132	**VKPC 82409**
L-134	**VKPC 82211**
L-135	**VKPC 82622**
L-136	VKPA 82617
L-138	VKPA 82624
L-140	**VKPA 82626**
L-141	**VKPC 82626**
L-142	VKPA 82628
L-144	**VKPA 82618**
L-146	VKPA 82627
L-155	**VKPC 82629**
L-165	**VKPC 82647**
M-130	**VKPC 87200**
M-131	VKPC 87206
M-132	**VKPC 87207**
M-133	**VKPC 87202**
M-135	**VKPC 87203**
M-136	**VKPC 87200**
M-137	**VKPC 87205**
M-138	**VKPC 87403**
M-139	**VKPC 87609**
M-140	**VKPC 87600**
M-142	**VKPC 87400**
M-143	**VKPC 87401**
M-144	**VKPC 87404**
M-148	**VKPC 87607**
M-149	**VKPC 87607**
M-150	**VKPC 94200**
M-151	**VKPC 94400**
M-152	**VKPC 94202**
M-153	VKPC 94422
M-154	**VKPC 94423**
M-170	**VKPC 88812**
M-172	**VKPC 88604**
M-173	**VKPC 88613**
M-174	**VKPC 88810**

X	SKF
M-175	**VKPC 88608**
M-176	**VKPC 88620**
M-177	**VKPC 88804**
M-179	**VKPC 88619**
M-182	**VKPC 88803**
M-183	**VKPC 88807**
M-184	**VKPC 88807**
M-185	**VKPC 88606**
M-186	**VKPC 88813**
M-187	**VKPC 88805**
M-188	**VKPC 88808**
M-189	**VKPC 88809**
M-193	**VKPC 88807**
M-194	**VKPC 88816**
M-195	**VKPC 88810**
M-196	**VKPC 88827**
M-197	**VKPC 88817**
M-199	**VKPC 88818**
M-200	**VKPC 88622**
M-201	VKPC 88820
M-203	**VKPC 88824**
M-205	**VKPC 88625**
M-205	**VKPC 88821**
M-206	**VKPC 88625**
M-207	**VKPC 88828**
M-208	**VKPC 88824**
M-209	**VKPC 88836**
N-100	**VKPC 92205**
N-101	**VKPC 92601**
N-102	VKPC 92201
N-103	**VKPC 92203**
N-104	**VKPC 92401**
N-105	**VKPC 92204**
N-106	VKPC 92207
N-107	**VKPC 92802**
N-111	**VKPC 92412**
N-118	**VKPC 92422**
N-120	**VKPC 92600**
N-123	**VKPC 92810**
N-130	**VKPC 92926**
N-205	**VKPC 83203**
N-206	**VKPC 83424**
N-304	VKPC 83204
N-305	**VKPC 83203**
N-404D	**VKPC 83613**
N-405	**VKPC 83615**
N-406	**VKPC 83635**
N-454	VKPC 83405
N-455	**VKPC 83406**
N-504	**VKPC 83612**
N-504D	**VKPC 83616**
N-505	**VKPC 83618**
N-505D	**VKPC 83605**
N-506	**VKPC 83603**
N-507	VKPC 83623
N-508	VKPC 83614
N-510	VKPC 83408
N-511	VKPC 83409
N-512	VKPC 83620
N-513	**VKPC 83622**
N-516	VKPC 83621
N-554	VKPC 83402

X	SKF
N-555	**VKPC 83403**
N-565	**VKPC 83624**
N-566	**VKPC 83625**
N-567	**VKPC 83628**
N-568	**VKPC 83630**
N-575	**VKPC 83604**
N-585	**VKPC 83423**
O-100	**VKPC 85600**
O-101	VKPC 85200
O-102	**VKPA 85605**
O-103	**VKPC 85203**
O-104	**VKPC 85201**
O-105	**VKPC 85202**
O-106	**VKPC 85206**
O-107	**VKPC 85400**
O-108	**VKPC 85406**
O-109	**VKPA 85608**
O-112	VKPA 85606
O-113	VKPA 85609
O-114	VKPA 85607
O-116	**VKPC 85401**
O-117	**VKPC 85407**
O-118	**VKPC 85408**
O-119	**VKPC 85603**
O-121	**VKPC 85612**
O-128	**VKPC 85610**
O-129	**VKPC 85403**
O-130	**VKPC 85410**
O-131	**VKPC 85404**
O-132	**VKPC 85620**
O-133	**VKPC 85622**
O-134	**VKPC 85621**
O-136	**VKPC 85211**
O-137	**VKPC 85409**
O-138	**VKPC 85611**
R-018	**VKPC 86407**
R-059	**VKPC 86212**
R-112	**VKPC 86403**
R-118T	**VKPC 86407**
R-119	**VKPC 83200**
R-120	**VKPC 86200**
R-121	**VKPA 86200**
R-122	**VKPA 86405**
R-124	**VKPC 86409**
R-125	**VKPC 86601**
R-125	**VKPC 86623**
R-126	VKPC 86411
R-127	VKPC 86410
R-128	**VKPC 86407**
R-129	**VKPC 86206**
R-130	**VKPC 86202**
R-131	**VKPC 86603**
R-132	**VKPC 86604**
R-133	**VKPC 86408**
R-134	**VKPC 86209**
R-135	**VKPC 86415**
R-137	**VKPC 86621**
R-138	**VKPC 86407**
R-139	**VKPA 86206**
R-140	**VKPC 82638**
R-141	**VKPC 86604**
R-142	VKPA 86403

www.bergab.ru Берг АБ bergab@ya.ru Тел. (495)-228-06-21, факс (495) 223-3071

X	SKF
R-145A	**VKPC 86201**
R-146	**VKPC 86217**
R-147CT	**VKPA 86217**
R-150	**VKPC 86208**
R-155	VKPC 86204
R-159	**VKPA 86212**
R-160	**VKPC 86401**
R-161	**VKPC 86402**
R-162	VKPC 86406
R-163	**VKPC 86205**
R-164	**VKPC 86606**
R-165	**VKPC 86615**
R-166	**VKPC 86408**
R-169	**VKPA 83200**
R-178	**VKPC 86602**
R-179	**VKPC 86413**
R-190	**VKPC 86607**
R-193	**VKPC 86610**
R-196	**VKPC 86609**
R-197	**VKPC 86614**
R-198	**VKPC 86612**
R-199	**VKPC 86618**
R-210	**VKPC 86631**
R-211	**VKPC 86633**
R-214	**VKPC 86216**
R-215	**VKPC 86215**
S-102	VKPC 82422
S-103	**VKPA 82202**
S-104	VKPC 82418
S-106E	**VKPC 82205**
S-108FL	VKPC 82406
S-108M	**VKPC 82404**
S-109	VKPC 82402
S-110	VKPC 82400
S-111	**VKPC 82412**
S-112	**VKPC 82619**
S-118	VKPC 82408
S-120	**VKPC 82405**
S-122	VKPC 82415
S-123	**VKPA 82410**
S-124	VKPA 82224
S-125	**VKPA 82220**
S-126	**VKPC 82218**
S-129	**VKPA 82222**
S-130	**VKPC 82204**
S-131	VKPC 82414
S-134	VKPA 82206
S-135	**VKPC 82206**
S-136	**VKPA 82218**
S-138	**VKPC 82216**
S-141	**VKPC 82614**
S-142	**VKPC 82616**
S-143	**VKPC 82420**
S-145	**VKPC 82413**
S-146	**VKPA 82431**
S-148	**VKPC 82208**
S-149	**VKPC 82224**
S-150	**VKPC 82631**
S-151	**VKPC 82630**
S-152	**VKPC 82606**
S-153	**VKPC 82419**
S-154	VKPC 82416

X	SKF
S-155	**VKPC 82424**
S-156	VKPC 82602
S-157	**VKPC 82600**
S-158	**VKPC 82603**
S-160	**VKPC 82616**
S-161	**VKPC 82214**
S-163	**VKPC 82410**
S-164	**VKPA 82435**
S-165	**VKPA 82620**
S-166	**VKPC 82432**
S-168	**VKPC 82643**
S-169	**VKPC 82652**
S-170	VKPA 82426
S-171	**VKPC 82426**
S-172	**VKPA 82428**
S-173	**VKPC 82428**
S-174	**VKPA 82608**
S-175	**VKPC 82608**
S-177	**VKPC 82604**
S-180	VKPA 82610
S-181	**VKPA 82429**
S-182	**VKPA 82210**
S-184	**VKPA 82634**
S-187	**VKPA 82608**
S-188	**VKPA 82440**
S-189	**VKPC 82660**
S-190	VKPC 88204
S-191	VKPC 88205
S-192	**VKPC 81405**
S-193	**VKPC 81409**
S-195	VKPC 99403
S-196	**VKPC 99404**
S-197	VKPC 99400
S-198	VKPC 99405
S-200	**VKPC 96200**
S-200	**VKPC 96204**
S-201	**VKPC 96402**
S-202	**VKPC 96212**
S-203	**VKPC 96210**
S-210	**VKPC 82645**
S-211	**VKPC 82437**
S-212	**VKPC 82646**
S-213	VKPC 82451
S-214	**VKPC 82662**
S-215	VKPA 82612
S-216	**VKPA 82441**
S-217	**VKPC 82230**
S-218	**VKPC 82245**
S-218	**VKPC 82450**
S-219	**VKPC 82249**
S-220	**VKPA 82670**
S-222	**VKPA 82671**
S-223	**VKPA 82653**
T-116	**VKPC 83206**
T-118	VKPC 83411
T-136	**VKPC 83401**
T-157	**VKPC 83412**
T-171	**VKPC 83415**
T-172	**VKPC 83416**
T-173	VKPC 83417
T-180	**VKPC 91400**
T-181	**VKPC 91402**

X	SKF
T-182	VKPC 91403
T-183	**VKPC 91200**

GRAF

PA 006	**VKPC 82205**
PA 017	VKPC 82402
PA 018	VKPC 82425
PA 019	VKPC 82422
PA 020	**VKPC 82404**
PA 035	**VKPC 84200**
PA 036	**VKPC 84400**
PA 041	**VKPC 82211**
PA 046	VKPC 85200
PA 047	**VKPA 86200**
PA 050	**VKPC 83410**
PA 051	VKPC 82403
PA 053	VKPC 88600
PA 054	VKPA 82206
PA 073	VKPC 83405
PA 074	**VKPC 83406**
PA 076	**VKPC 82204**
PA 082	**VKPC 83208**
PA 083	**VKPC 84608**
PA 084	**VKPC 83412**
PA 085	**VKPC 86607**
PA 086	**VKPC 82421**
PAZ 088	**VKPA 82202**
PA 089	VKPC 82400
PA 091	**VKPC 84201**
PA 095	**VKPC 83203**
PA 096	**VKPC 83613**
PA 098	VKPC 82200
PA 100	**VKPC 82603**
PA 101	**VKPC 82201**
PAZ 102	**VKPC 81602**
PA 103	**VKPC 81605**
PAZ 105	**VKPC 88807**
PA 106	**VKPC 88812**
PA 108	**VKPC 85201**
PA 110	**VKPC 86401**
PA 112	VKPC 86406
PA 114	**VKPC 86610**
PA 115	VKPC 88603
PA 116	**VKPC 83626**
PA 118	**VKPC 84616**
PA 119	**VKPC 88813**
PA 120	VKPA 85607
PA 121	**VKPA 85605**
PA 121	VKPA 85606
PA 121	**VKPC 85605**
PA 123	**VKPC 83624**
PA 124	**VKPC 83415**
PA 126	**VKPC 85204**
PA 128	**VKPC 83603**
PA 129	VKPC 83623
PA 130	VKPC 84606
PA 131	**VKPC 84600**
PA 133	**VKPC 88803**
PA 135	**VKPC 88606**
PA 139	VKPC 86410
PA 140	**VKPC 86202**

www.bergab.ru Берг АБ bergab@ya.ru Тел. (495)-228-06-21, факс (495) 223-3071

X	SKF
PA 142	**VKPC 86201**
PA 143	VKPC 82407
PA 145	VKPC 81403
PAZ 146	**VKPC 81400**
PA 147	**VKPC 83200**
PA 148	**VKPC 81200**
PA 149	**VKPC 88609**
PA 150	**VKPC 85203**
PA 151	VKPC 83606
PA 152	**VKPC 83602**
PA 153	**VKPC 84205**
PA 154	VKPC 83204
PA 156	**VKPC 83605**
PA 157	VKPC 83408
PA 158	VKPC 83409
PA 160	**VKPA 82222**
PA 161	**VKPC 82606**
PA 162	VKPC 82406
PA 163	**VKPC 82412**
PA 164	VKPC 82406
PA 165	**VKPC 83607**
PA 168	**VKPC 82409**
PA 171	VKPC 82417
PA 173	**VKPC 88805**
PA 174	**VKPC 84607**
PA 178	**VKPC 82630**
PA 187	**VKPC 87200**
PA 187	VKPC 87201
PA 188	VKPC 83402
PA 189	**VKPC 83616**
PA 190	**VKPC 83612**
PA 191	**VKPC 82405**
PA 192	VKPC 83614
PA 193	**VKPC 84603**
PA 194	VKPC 86411
PA 195	VKPC 83411
PA 196	**VKPC 85207**
PA 197	**VKPC 83206**
PA 198	**VKPC 86208**
PA 201	VKPC 92201
PA 202	VKPC 92207
PA 203	**VKPC 92802**
PA 204	**VKPA 93204**
PA 205	**VKPA 93202**
PA 205	VKPC 93202
PA 206	**VKPC 93402**
PA 207	**VKPC 93403**
PA 208	**VKPC 94200**
PA 210	**VKPC 91400**
PA 213	**VKPC 91200**
PA 217	**VKPA 91412**
PA 218	VKPC 91600
PA 219	**VKPC 94400**
PA 230	**VKPA 82410**
PA 231	**VKPC 82609**
PA 232	**VKPC 84207**
PA 233	**VKPC 81601**
PA 234	**VKPC 85600**
PAZ 235	**VKPC 85400**
PA 236	**VKPC 85406**
PA 237	VKPA 85606
PA 240	**VKPC 83617**

X	SKF
PA 241	**VKPC 83600**
PAZ 243	**VKPC 88605**
PA 244	**VKPA 85608**
PA 245	VKPC 86211
PA 246	**VKPC 83625**
PA 247	**VKPC 86602**
PA 248	VKPC 82414
PA 251	**VKPC 83403**
PA 252	**VKPC 83618**
PA 253	**VKPC 87202**
PA 256	**VKPC 83401**
PA 257	VKPA 82621
PA 259	VKPC 88602
PA 263	VKPC 88204
PA 264	**VKPC 88610**
PA 265	**VKPC 82623**
PA 266	VKPC 84202
PA 268	**VKPC 87600**
PA 269	VKPC 82416
PA 270	**VKPC 88614**
PA 272	**VKPC 88613**
PA 274	VKPC 82418
PA 275	**VKPC 82600**
PA 276	VKPC 82602
PA 278	**VKPC 84403**
PAZ 279	**VKPC 81401**
PA 282	**VKPC 86402**
PA 284	**VKPC 84611**
PA 285	**VKPA 82218**
PAZ 286A	**VKPC 82214**
PA 287	VKPC 99400
PA 290	VKPA 82604
PA 291A	**VKPA 82608**
PA 293	**VKPC 82614**
PA 294	**VKPC 82616**
PA 296	**VKPC 84617**
PA 297	**VKPC 83423**
PA 299	VKPA 82617
PA 300	VKPA 82624
PA 301	**VKPC 86622**
PA 302	VKPA 85609
PA 303	**VKPC 83604**
PA 304	**VKPC 82419**
PA 305	**VKPC 87203**
PA 306	VKPC 82633
PA 308	VKPC 83620
PA 309	**VKPC 83622**
PA 310	**VKPC 82420**
PA 311	VKPA 82610
PAZ 312	**VKPC 86609**
PA 313	VKPC 85205
PA 314	**VKPC 86614**
PA 316	VKPC 88205
PA 317	**VKPC 82631**
PA 318	VKPA 82426
PA 319	**VKPC 81607**
PA 320	**VKPC 81608**
PA 321	**VKPC 84208**
PA 322	**VKPC 84609**
PA 323	**VKPC 84618**
PAZ 324	**VKPC 85408**
PAZ 325	**VKPC 85407**

X	SKF
PA 326	**VKPC 85603**
PA 331	VKPC 86612
PA 332	VKPC 82415
PA 333	**VKPC 99406**
PA 336	VKPC 83621
PA 337	VKPC 82408
PA 338A	**VKPA 82210**
PA 339A	VKPA 82612
PA 340	**VKPA 82428**
PA 342	VKPA 82628
PA 344	**VKPC 81609**
PA 345	**VKPC 82632**
PA 346	**VKPC 82800**
PA 347	VKPC 82636
PA 348	**VKPC 83615**
PA 351	**VKPC 91402**
PA 352	VKPC 91403
PA 353	**VKPC 86205**
PA 354	**VKPA 82220**
PA 355	VKPC 83627
PA 356	**VKPC 83608**
PA 364	**VKPA 82618**
PA 364	**VKPC 82618**
PA 365	**VKPC 82618**
PAZ 366	VKPA 82224
PA 367	**VKPA 82431**
PA 368A	VKPA 82620
PA 368A	**VKPC 82620**
PAZ 369	**VKPC 88607**
PA 370	**VKPC 88612**
PA 372	**VKPC 82432**
PA 374	**VKPC 87403**
PA 375	**VKPC 87205**
PA 377	**VKPC 88604**
PA 379	VKPC 88800
PA 380	**VKPC 88802**
PA 383	**VKPC 81606**
PA 384	VKPC 81610
PA 385	**VKPC 93205**
PA 387	**VKPC 85612**
PA 390	**VKPC 88611**
PAZ 391	**VKPC 83420**
PAZ 393	**VKPC 83424**
PA 395	**VKPA 82440**
PA 397	**VKPC 82622**
PA 399	**VKPC 82629**
PA 400	**VKPC 84610**
PA 401	**VKPC 84209**
PA 406	**VKPC 88809**
PA 407	**VKPC 88808**
PAZ 409	**VKPC 85610**
PA 410	**VKPC 85403**
PA 411	VKPC 86204
PAZ 412	**VKPC 86409**
PA 413	**VKPC 84612**
PA 414A	**VKPC 88804**
PA 415	**VKPC 85410**
PAZ 418	**VKPC 82424**
PA 420A	**VKPC 82642**
PA 422	**VKPC 81603**
PA 423	**VKPC 81206**
PA 424	**VKPC 81803**

www.bergab.ru Берг АБ bergab@ya.ru Тел. (495)-228-06-21, факс (495) 223-3071

X	SKF
PAZ 425	**VKPC 81204**
PA 426	**VKPC 87400**
PAZ 427	**VKPC 87401**
PA 428	**VKPC 87404**
PA 428	**VKPC 93211**
PA 429A	**VKPC 84411**
PA 430	**VKPC 88615**
PA 431	**VKPC 88616**
PA 432A	**VKPC 88617**
PA 434	**VKPC 92205**
PA 435	**VKPC 92404**
PA 436	**VKPC 92204**
PA 437	**VKPC 94002**
PA 439	**VKPC 94434**
PAZ 440	**VKPC 84210**
PAZ 441	**VKPC 85202**
PAZ 442	**VKPC 85206**
PAZ 443	**VKPC 85401**
PA 444	**VKPA 82634**
PAZ 446	**VKPC 88608**
PA 447	**VKPC 88827**
PAZ 448	**VKPC 88620**
PA 449	**VKPC 88810**
PA 450	**VKPC 88816**
PA 452	**VKPA 82648**
PA 453	VKPC 82635
PA 454	**VKPC 82643**
PA 456	**VKPC 93405**
PA 459	**VKPC 93410**
PA 479	**VKPC 91404**
PA 486	VKPC 91617
PA 491	**VKPC 83428**
PA 493A	**VKPC 92408**
PA 494	**VKPC 82436**
PAZ 495	**VKPC 88619**
PA 497	**VKPC 82647**
PA 498	VKPC 82649
PA 499	**VKPC 82650**
PA 500	**VKPC 82651**
PA 501	**VKPC 84406**
PA 502A	**VKPC 88826**
PA 503	**VKPC 82638**
PA 504	**VKPA 93204**
PA 505	**VKPC 93209**
PA 507	**VKPA 93403**
PA 508	**VKPC 92412**
PA 509	**VKPC 84407**
PA 513	**VKPC 86604**
PA 514	**VKPC 86603**
PA 515	**VKPC 86601**
PA 516	**VKPC 86408**
PAZ 517	**VKPC 84601**
PA 519A	**VKPC 99407**
PA 525	**VKPC 83416**
PA 526	VKPC 83417
PA 527	**VKPC 86623**
PA 528	VKPC 82423
PA 529	**VKPC 86212**
PA 530	**VKPC 86209**
PAZ 531	**VKPC 86413**
PA 531	**VKPC 88413**
PA 532	**VKPC 86606**

X	SKF
PA 533	**VKPC 86615**
PA 534	**VKPC 86616**
PA 535	VKPC 91616
PA 536	**VKPC 86621**
PA 537	**VKPC 92208**
PA 538	**VKPC 92406**
PA 539	**VKPC 92810**
PA 540	**VKPC 92601**
PA 541	**VKPC 85211**
PA 542	**VKPC 83425**
PA 543	**VKPC 86603**
PA 544	**VKPC 83630**
PAZ 546	**VKPA 81400**
PA 547	**VKPC 86200**
PA 548	**VKPC 84405**
PA 549	**VKPA 93207**
PA 549	VKPC 93207
PAZ 550	**VKPC 86206**
PA 551	**VKPC 94202**
PA 552	**VKPC 82230**
PA 553	**VKPA 82653**
PAZ 554	**VKPC 82206**
PA 555	**VKPC 97201**
PA 556	**VKPC 97200**
PA 557	**VKPC 82621**
PA 559	**VKPC 82208**
PA 561A	**VKPC 87607**
PA 562	**VKPC 87813**
PA 563	**VKPC 93601**
PA 564	VKPC 87814
PA 565	**VKPC 87835**
PAZ 566	**VKPC 82224**
PA 567	**VKPC 88818**
PA 568	VKPC 82411
PA 569A	**VKPC 87816**
PA 570	**VKPC 88831**
PAZ 571	**VKPC 85404**
PAZ 572	**VKPC 85611**
PA 573	**VKPC 86405**
PA 575	**VKPC 88200**
PA 576	**VKPC 86407**
PAZ 577	**VKPC 85409**
PA 578	VKPC 88820
PAZ 579	**VKPA 81401**
PA 580	**VKPC 88824**
PA 581	VKPA 86403
PA 581	**VKPC 86403**
PA 582	**VKPC 88622**
PAZ 583	**VKPC 88625**
PA 584	**VKPC 88821**
PA 585	**VKPC 82218**
PA 587	VKPC 87206
PA 588	**VKPC 84412**
PA 589A	**VKPC 84409**
PA 590	**VKPC 84408**
PA 591	**VKPC 81612**
PA 592	**VKPC 81800**
PA 593A	**VKPC 86619**
PAZ 595	**VKPA 86206**
PA 596	**VKPC 82216**
PA 597	**VKPA 86212**
PA 598	**VKPC 82431**

X	SKF
PA 599	**VKPC 82245**
PA 600	**VKPC 83628**
PA 601	**VKPA 82230**
PA 602	VKPC 92821
PA 603	**VKPC 81210**
PA 604	**VKPC 88830**
PA 605A	**VKPA 82429**
PA 606	**VKPC 86618**
PA 607	**VKPC 82652**
PA 608	**VKPC 88825**
PA 609	**VKPC 81615**
PA 610	**VKPC 88828**
PA 611	**VKPC 92209**
PA 612	**VKPC 84215**
PA 613	**VKPC 88835**
PA 614	**VKPC 82437**
PA 615	**VKPC 82662**
PA 616	**VKPC 82646**
PA 617	**VKPC 81611**
PA 618A	**VKPC 81802**
PA 619	**VKPC 81406**
PA 620	**VKPC 82441**
PA 621	**VKPC 82645**
PA 622	**VKPA 82240**
PA 623	**VKPC 82450**
PA 625	**VKPC 88829**
PA 626	**VKPC 82246**
PAZ 628	**VKPC 83205**
PA 629	**VKPA 82441**
PA 630	**VKPA 82246**
PA 631	VKPC 82451
PA 632	**VKPC 86215**
PA 633	**VKPC 86216**
PA 634	**VKPC 86415**
PA 636	**VKPC 86630**
PA 637	**VKPC 85613**
PA 638	**VKPC 84613**
PA 639	**VKPC 84216**
PA 640	**VKPC 84404**
PAZ 640	**VKPC 84620**
PA 641	**VKPC 83636**
PA 642	**VKPC 83635**
PA 643	**VKPC 83810**
PA 644	**VKPC 81408**
PA 645	**VKPA 82670**
PA 646	**VKPA 82671**
PA 654	**VKPC 81411**
PA 655	**VKPC 81620**
PA 656	VKPC 81621
PA 658	**VKPC 81622**
PA 659	**VKPA 82618**
PA 659	**VKPC 82618**
PA 660	**VKPC 92926**
PA 661	**VKPC 88836**
PA 662	**VKPC 81805**
PA 663	**VKPC 81405**
PA 664	**VKPC 85620**
PA 665	**VKPC 85622**
PA 671	**VKPC 82810**
PA 672	**VKPC 82665**
PA 674	**VKPC 81407**
PA 675	**VKPC 81625**

www.bergab.ru Берг АБ bergab@ya.ru Тел. (495)-228-06-21, факс (495) 223-3071

X	SKF
PA 676	**VKPC 81215**
PA 677	**VKPC 81624**
PA 678	**VKPC 88206**
PA 679	**VKPC 81402**
PA 684	**VKPC 83811**
PA 687	**VKPC 88631**
PA 690	**VKPC 82247**
PA 693	**VKPC 82249**
PA 697	**VKPC 95008**
PA 700	**VKPC 95405**
PA 702	**VKPC 95424**
PA 704	**VKPC 88203**
PA 708	**VKPC 88844**
PA 714	**VKPC 91405**
PA 721	**VKPA 86217**
PA 722	**VKPC 86217**
PA 723	**VKPC 86633**
PA 724	**VKPC 86416**
PA 725	**VKPC 96212**
PA 727	**VKPC 85624**
PA 728	**VKPC 85621**
PA 731	**VKPC 81623**
PA 739	**VKPC 82250**
PA 741	**VKPC 84415**
PA 743	VKPC 99403
PA 766	**VKPC 91413**
PA 766	**VKPC 91417**
PA 766A	**VKPC 91413**
PA 766A	**VKPC 91417**
PA 767	**VKPC 91607**
PA 770	**VKPC 92422**
PA 771	**VKPA 91613**
PA 774	**VKPC 96204**
PA 775	**VKPC 91606**
PA 776	**VKPC 95423**
PA 777	**VKPC 92401**
PA 778	VKPC 93413
PA 779	**VKPA 81402**
PA 780	**VKPC 95422**
PA 782	**VKPC 95010**
PA 783	**VKPC 94424**
PA 784	VKPC 92405
PA 785	**VKPA 91417**
PA 786	**VKPC 94452**
PA 788	**VKPC 92615**
PA 789	**VKPC 95404**
PA 790	VKPC 94422
PA 793	**VKPC 91414**
PA 797	**VKPC 98000**
PA 800	**VKPC 94423**
PA 812	**VKPC 92630**

LAI

1068-DEG	**VKPC 82205**
1079-1	**VKPC 87602**
1085	**VKPC 83208**
1086-M	**VKPC 82404**
1086	**VKPC 82404**
1088-M	**VKPC 83206**
1091-A	**VKPC 87200**
1092	**VKPC 86403**

X	SKF
1094	**VKPA 82202**
1095-A	**VKPC 86205**
1097-L	**VKPC 82412**
1099	**VKPC 86202**
1100	**VKPC 83411**
1101	**VKPC 88803**
1102	**VKPC 88807**
1103	**VKPC 82619**
1105-1	**VKPC 86201**
1111	**VKPC 84205**
1113	**VKPC 82210**
1114-P	**VKPA 86200**
1114	**VKPC 86200**
1119	**VKPC 86203**
1124-D1	**VKPA 82435**
1124-D	**VKPA 82410**
1124	**VKPC 82415**
1125	**VKPC 88200**
1127-1	**VKPC 83200**
1128	**VKPC 83616**
1130-1	**VKPC 82630**
1130	**VKPC 82606**
1132	**VKPC 83603**
1134	**VKPC 86602**
1135	**VKPC 83401**
1137	**VKPC 81601**
1138	**VKPC 81200**
1139	**VKPC 81400**
1140	**VKPC 81401**
1142	**VKPC 88600**
1143	**VKPC 88609**
1144	**VKPC 88603**
1145	**VKPC 88802**
1149	**VKPC 83607**
1151	**VKPC 84207**
1152	**VKPC 84206**
1154	**VKPC 85600**
1155	**VKPA 85605**
1159	**VKPC 85200**
1161	**VKPC 85203**
1162	**VKPC 85201**
1163	**VKPC 85202**
1164-C	**VKPC 85401**
1164	**VKPC 85206**
1165-D	**VKPC 85406**
1165	**VKPC 85400**
1166	**VKPA 85608**
1167	**VKPC 85407**
1168	**VKPC 85603**
1170	**VKPC 87203**
1175	**VKPC 83618**
1176	**VKPC 83403**
1180	**VKPC 86610**
1183	**VKPC 82200**
1189	**VKPC 82201**
1190	**VKPC 81602**
1192	**VKPC 83600**
1193	**VKPC 83617**
1194	**VKPC 81605**
1195	**VKPC 86413**
1196	**VKPC 82419**
1197	**VKPC 84403**

X	SKF
1198	**VKPC 82424**
1199	**VKPC 82214**
1200	**VKPC 82616**
1201	**VKPC 82621**
1202	**VKPC 82623**
1203	**VKPC 82633**
1205-1	**VKPA 82206**
1205	**VKPC 82206**
1206	**VKPC 83423**
1207	**VKPC 83604**
1208	**VKPC 83203**
1210	**VKPC 83625**
1211	**VKPC 83624**
1212	**VKPC 83205**
1214	**VKPC 83626**
1215	**VKPC 82600**
1217	**VKPC 82208**
1218	**VKPC 88605**
1219	**VKPC 88610**
1220	**VKPC 82604**
1221	**VKPC 82418**
1222	**VKPC 82614**
1225	**VKPC 82622**
1227	**VKPC 84600**
1228	**VKPC 84601**
1229	**VKPC 84208**
1230	**VKPC 84609**
1231	**VKPC 84201**
1232	**VKPC 84200**
1233	**VKPC 88613**
1235	**VKPC 88608**
1236	**VKPC 88620**
1237	**VKPC 88813**
1238	**VKPC 86401**
1239	**VKPC 86402**
1241	**VKPC 86623**
1242	**VKPC 86405**
1243	**VKPC 86603**
1244	**VKPC 84611**
1245	**VKPC 88204**
1247	**VKPC 86609**
1248	**VKPC 86614**
1285	**VKPC 84603**
1286	**VKPC 84616**
1287	**VKPC 84618**
1288	**VKPA 82222**
1289	**VKPA 82218**
1290	**VKPC 87600**
1291	**VKPC 92802**
1292	**VKPC 92207**
1293	**VKPC 92201**
1294	**VKPC 85408**
1296	**VKPC 88607**
1298	**VKPC 82423**
1299	**VKPC 82632**
1300	**VKPC 82800**
1301	**VKPC 82636**
1303	**VKPC 81606**
1304	**VKPC 93207**
1305	**VKPC 87403**
1306	**VKPC 87205**
1307	**VKPC 88611**

X	SKF
1310	VKPC 83424
1311	VKPC 83627
1313	VKPA 82429
1314	VKPA 82429
1315	VKPA 82618
1316	VKPC 82618
1318	VKPA 82431
1321	VKPC 82432
1325	VKPC 82626
1326	VKPA 82628
1328	VKPC 88604
1329	VKPA 85609
1330	VKPC 85610
1331	VKPC 83408
1332	VKPC 83409
1333	VKPC 83620
1334	VKPC 83622
1336	VKPC 86407
1338	VKPC 81206
1340	VKPA 82608
1341	VKPC 84606
1342	VKPC 83605
1345	VKPC 82216
1346	VKPC 86408
1347	VKPA 86407
1348	VKPA 81401
1349	VKPA 81400
1350	VKPC 84400
1351	VKPC 84608
1352	VKPC 86607
1355	VKPC 84617
1357	VKPC 86612
1358	VKPA 82428
1359	VKPC 83615
1361	VKPC 83420
1363	VKPC 82622
1364	VKPC 84209
1365	VKPC 84620
1366	VKPC 86409
1368	VKPC 87404
1369	VKPC 88615
1370	VKPC 88616
1371	VKPC 88617
1375	VKPC 82218
1377	VKPA 82426
1378	VKPA 83621
1379	VKPA 82210
1382	VKPC 93205
1383	VKPC 82629
1384	VKPC 84610
1385	VKPC 88203
1386	VKPC 88809
1387	VKPC 88808
1388	VKPC 85403
1389	VKPC 84612
1390	VKPC 88804
1391	VKPC 85404
1393	VKPC 88817
1393	VKPC 88827
1394	VKPC 88810
1395	VKPC 82642
1396	VKPC 81805

X	SKF
1398	VKPC 87400
1399	VKPC 87401
1400	VKPC 84411
1404	VKPC 84210
1406	VKPC 88619
1409	VKPC 82635
1411	VKPC 82436
1412	VKPC 82660
1415	VKPC 84408
1417	VKPC 88826
1419	VKPC 83428
1420	VKPC 83425
1421	VKPC 83630
1423	VKPA 82202
1424	VKPC 82648
1425	VKPC 82643
1426	VKPC 82647
1427	VKPC 82638
1428	VKPC 82230
1429	VKPA 82653
1430	VKPC 82431
1431	VKPC 82245
1432	VKPA 82230
1433	VKPC 84405
1434	VKPC 84412
1435	VKPC 84409
1439	VKPC 88816
1442	VKPC 88824
1443	VKPC 88622
1444	VKPC 88625
1445	VKPC 88821
1446	VKPC 85211
1447	VKPC 85611
1448	VKPC 85409
1449	VKPC 86603
1450	VKPC 86212
1451	VKPC 86209
1452	VKPC 86606
1453	VKPC 86615
1454	VKPC 86615
1455	VKPC 86621
1457	VKPA 86212
1459	VKPA 87607
1460	VKPC 87813
1463	VKPC 87835
1464	VKPC 87816
1465	VKPC 86618
1466	VKPC 86619
1467	VKPC 84607
1468	VKPC 84216
1469	VKPC 82413
1472	VKPC 84202
1473	VKPC 82416
1475	VKPC 86622
1476	VKPC 82420
1478	VKPC 81608
1480	VKPC 81610
1485	VKPC 87609
1493	VKPC 87817
1499	VKPC 87818
1502	VKPC 87819
1510	VKPC 81803

X	SKF
1512	VKPC 97201
1513	VKPC 97200
1515	VKPC 92208
1516	VKPC 92810
1523	VKPC 82214
1524	VKPA 82440
1525	VKPC 86604
1526	VKPC 98000
1527	VKPC 86205
1530	VKPC 81210
1532	VKPA 82429
1533	VKPC 82652
1537	VKPC 92209
1539	VKPC 82437
1541	VKPC 82646
1543	VKPC 81802
1544	VKPC 82441
1545	VKPC 82645
1546	VKPA 82240
1547	VKPC 82450
1549	VKPC 88829
1550	VKPC 85620
1552	VKPC 85622
1554	VKPC 81406
1555	VKPA 82246
1557	VKPA 82246
1559	VKPC 86630
1560	VKPC 85613
1562	VKPC 84620
1563	VKPC 83636
1564	VKPC 83635
1565	VKPC 81620
1567	VKPC 92926
1568	VKPC 88836
1569	VKPC 81405
2300	VKPC 82631
4049	VKPC 94002
4053	VKPC 94424
4068	VKPC 94434
4084	VKPC 84406
4085	VKPC 84407
4104	VKPC 84215
5058	VKPC 96210
7108	VKPC 95010
7114	VKPC 95422
7115	VKPC 95008
7118	VKPC 95611
7120	VKPC 95602
7121	VKPC 95610
9015	VKPC 91402
9017	VKPC 91616
9025	VKPC 99403
9025	VKPC 99404
9026	VKPC 92203
9035	VKPC 93405
9045	VKPC 91431
9050	VKPC 94202
9056	VKPC 93409
9057	VKPA 91409
9061	VKPC 81607
9063	VKPC 92601
9064	VKPC 91419

www.bergab.ru Берг АБ bergab@ya.ru Тел. (495)-228-06-21, факс (495) 223-3071

X	SKF
9074	**VKPC 92821**
9083	**VKPC 93410**
9097	**VKPC 87610**
9141	**VKPC 91617**
9145	**VKPC 91804**
9150	**VKPC 81609**
9161	**VKPC 99406**
9166	**VKPC 94612**
9207	**VKPC 92406**
9209	**VKPC 93601**
9213	**VKPC 92412**
9222	**VKPC 88825**
9229	**VKPC 88820**
9230	**VKPC 88818**
9250	**VKPC 93601**
9251	**VKPC 87814**
9259	**VKPC 94602**
9262	**VKPC 81611**
9263	**VKPC 81800**
9272	**VKPA 91441**
9274	**VKPC 86619**
9279	**VKPC 81612**
9312	**VKPC 88828**
9318	**VKPC 94603**
9332	**VKPC 88830**
9335	**VKPC 81615**
9346	**VKPC 88835**

QH

X	SKF
QCP 181	**VKPC 84200**
QCP 216	**VKPC 87602**
QCP 535	**VKPC 86203**
QCP 538	**VKPC 84400**
QCP 539	**VKPC 86200**
QCP 539F	**VKPA 86200**
QCP 541	VKPC 85200
QCP 560	**VKPC 88803**
QCP 561	VKPC 88600
QCP 566	VKPC 83405
QCP 567	**VKPC 83424**
QCP 579	VKPC 93602
QCP 585	**VKPC 82204**
QCP 593	VKPC 82402
QCP 730	**VKPC 84201**
QCP 735	**VKPC 83416**
QCP 738	**VKPC 87200**
QCP 740	VKPC 82403
QCP 752	VKPC 92207
QCP 754	**VKPC 92802**
QCP 762	**VKPC 83610**
QCP 766	**VKPC 82206**
QCP 769	**VKPC 86403**
QCP 770	**VKPC 83412**
QCP 788	VKPC 92201
QCP 798	**VKPC 91400**
QCP 904	**VKPC 94400**
QCP 909	VKPC 86410
QCP 911	**VKPA 82202**
QCP 951	**VKPC 83415**
QCP 952	**VKPC 81400**
QCP 952BH	**VKPA 81400**

X	SKF
QCP 957	**VKPC 86201**
QCP 958	**VKPC 83200**
QCP 958BH	**VKPA 83200**
QCP 963	**VKPC 86202**
QCP 965	VKPC 82400
QCP 969	**VKPC 86610**
QCP 970	**VKPA 85605**
QCP 972	**VKPC 88200**
QCP 973	**VKPC 85203**
QCP 974	**VKPC 87817**
QCP 976	**VKPC 86607**
QCP 977	**VKPC 83206**
QCP 980	VKPC 84606
QCP 982	VKPC 82200
QCP 985	**VKPC 84205**
QCP 986	**VKPC 81200**
QCP 988	**VKPC 82421**
QCP 990	**VKPC 88609**
QCP 991	VKPC 82406
QCP 994	**VKPC 88606**
QCP 995	**VKPC 88806**
QCP 998	VKPC 83417
QCP 1006	**VKPC 87602**
QCP 1007	VKPC 83402
QCP 1009	**VKPC 83203**
QCP 1011	VKPC 83411
QCP 1012	VKPC 83606
QCP 1016	**VKPA 93204**
QCP 1017	**VKPC 82412**
QCP 1018	**VKPC 82208**
QCP 1019	VKPC 83204
QCP 1154	**VKPC 82211**
QCP 1155	**VKPC 86208**
QCP 1187	VKPC 83409
QCP 1191	**VKPC 83607**
QCP 1203	**VKPC 91200**
QCP 1205	VKPC 88602
QCP 1265	**VKPC 91424**
QCP 1283	**VKPC 83603**
QCP 1292	**VKPC 86623**
QCP 1294	**VKPC 81602**
QCP 1296	**VKPC 83626**
QCP 1342	**VKPC 83622**
QCP 1350	**VKPC 85206**
QCP 1360	VKPC 86211
QCP 1375	**VKPC 88614**
QCP 1376	**VKPC 87203**
QCP 1395	**VKPC 95422**
QCP 1400	VKPC 93409
QCP 1401	VKPC 94422
QCP 1416	**VKPC 93600**
QCP 1425	VKPC 82633
QCP 1428	VKPC 82418
QCP 1430	**VKPA 82608**
QCP 1431	**VKPC 82614**
QCP 1432	**VKPC 82616**
QCP 1434	**VKPC 82622**
QCP 1435	**VKPC 88620**
QCP 1436	**VKPC 88810**
QCP 1445	**VKPC 86622**
QCP 1498	**VKPC 86205**
QCP 1504	**VKPC 99406**

X	SKF
QCP 1535	**VKPC 92600**
QCP 1550	**VKPC 88813**
QCP 1556	**VKPC 83607**
QCP 1559	VKPC 88603
QCP 1584	VKPC 88204
QCP 2022	**VKPC 81601**
QCP 2051	**VKPC 94200**
QCP 2053	**VKPC 83608**
QCP 2054	**VKPC 83628**
QCP 2057	VKPC 83627
QCP 2062	**VKPC 85201**
QCP 2065	VKPC 83409
QCP 2066	VKPC 83408
QCP 2067	**VKPC 83613**
QCP 2071	**VKPC 83605**
QCP 2073	**VKPC 83616**
QCP 2074	**VKPC 83616**
QCP 2077	**VKPC 86401**
QCP 2078	VKPC 86406
QCP 2085	VKPC 84202
QCP 2087	**VKPC 84608**
QCP 2092	**VKPC 87818**
QCP 2095	**VKPC 87823**
QCP 2098	VKPC 82602
QCP 2100	**VKPC 85600**
QCP 2101	**VKPC 84607**
QCP 2102	VKPC 86411
QCP 2106	VKPA 82206
QCP 2110	**VKPA 82222**
QCP 2111	**VKPA 82202**
QCP 2112	**VKPC 82606**
QCP 2114	**VKPC 84603**
QCP 2118	VKPC 87207
QCP 2126	VKPC 99400
QCP 2135	**VKPC 91402**
QCP 2139	**VKPC 91431**
QCP 2140	VKPC 94436
QCP 2172	VKPC 91403
QCP 2178	VKPC 82411
QCP 2181	VKPC 84206
QCP 2182	**VKPC 87403**
QCP 2188	VKPC 85205
QCP 2189	**VKPC 85400**
QCP 2194	**VKPC 85406**
QCP 2200	**VKPC 87202**
QCP 2204	VKPC 86204
QCP 2226	**VKPC 81605**
QCP 2266	**VKPC 99404**
QCP 2300	**VKPA 85608**
QCP 2301	**VKPC 87205**
QCP 2303	**VKPC 84616**
QCP 2304	**VKPC 84207**
QCP 2307	VKPC 93207
QCP 2328	**VKPC 92205**
QCP 2329	**VKPC 92401**
QCP 2331	**VKPC 82405**
QCP 2332	**VKPA 82410**
QCP 2333	**VKPC 82410**
QCP 2334	VKPC 82414
QCP 2336	VKPC 82413
QCP 2337	VKPC 82602
QCP 2338	**VKPC 83617**

www.bergab.ru Берг АБ bergab@ya.ru Тел. (495)-228-06-21, факс (495) 223-3071

www.bergab.ru Берг АБ bergab@ya.ru Тел. (495)-228-06-21, факс (495) 223-3071

X	SKF
QCP 2340	VKPC 82416
QCP 2341	VKPA 82604
QCP 2342	**VKPC 82604**
QCP 2343	VKPC 83623
QCP 2344	**VKPC 83618**
QCP 2345	**VKPC 83403**
QCP 2350	**VKPC 88613**
QCP 2353	VKPA 85606
QCP 2354	**VKPC 88604**
QCP 2358	**VKPC 88610**
QCP 2361	**VKPC 87600**
QCP 2363	VKPC 82403
QCP 2364	**VKPC 82201**
QCP 2366	VKPA 82621
QCP 2368	**VKPC 82623**
QCP 2369	**VKPC 82621**
QCP 2370	**VKPC 82216**
QCP 2372	**VKPC 82609**
QCP 2373	**VKPC 87819**
QCP 2376	**VKPC 88812**
QCP 2384	**VKPC 83424**
QCP 2405	**VKPC 92601**
QCP 2413	**VKPC 94452**
QCP 2416	VKPC 82624
QCP 2418	**VKPC 91428**
QCP 2425	**VKPC 95010**
QCP 2433	**VKPC 95008**
QCP 2435	**VKPC 91413**
QCP 2438	VKPC 91616
QCP 2440	**VKPC 87203**
QCP 2444	VKPC 92648
QCP 2446	**VKPC 92820**
QCP 2449	**VKPC 82600**
QCP 2450	**VKPC 88608**
QCP 2453	**VKPC 81401**
QCP 2453BH	**VKPC 81401**
QCP 2456	**VKPC 83423**
QCP 2457	VKPC 82408
QCP 2458	**VKPC 86402**
QCP 2463	**VKPC 83622**
QCP 2464	VKPC 83620
QCP 2465	VKPC 85609
QCP 2467	**VKPC 93402**
QCP 2471	**VKPC 85202**
QCP 2472	**VKPC 84611**
QCP 2473	VKPC 93204
QCP 2474	**VKPC 86602**
QCP 2476	**VKPA 93202**
QCP 2477	**VKPC 88802**
QCP 2478	VKPC 88800
QCP 2479	**VKPC 82608**
QCP 2481	**VKPC 82420**
QCP 2485	VKPC 82617
QCP 2485BH	VKPA 82617
QCP 2487	**VKPC 82616**
QCP 2492	**VKPC 83205**
QCP 2495	**VKPC 84609**
QCP 2496	**VKPC 83604**
QCP 2497	**VKPC 83630**
QCP 2499	**VKPC 86603**
QCP 2500	**VKPC 82630**
QCP 2506	**VKPC 87609**

X	SKF
QCP 2507	**VKPC 88605**
QCP 2508	**VKPC 95602**
QCP 2509	**VKPC 95004**
QCP 2510	**VKPC 83624**
QCP 2512	**VKPC 85407**
QCP 2513	**VKPC 85401**
QCP 2516	VKPA 86407
QCP 2516BH	**VKPC 86407**
QCP 2517	**VKPC 85408**
QCP 2525	**VKPC 84601**
QCP 2526	**VKPC 84600**
QCP 2527	**VKPC 84208**
QCP 2532	**VKPC 94452**
QCP 2542	**VKPC 87607**
QCP 2544	**VKPC 86614**
QCP 2545	**VKPC 84403**
QCP 2547	**VKPC 84405**
QCP 2550	**VKPC 94002**
QCP 2557	**VKPC 82616**
QCP 2558	**VKPC 82631**
QCP 2559	VKPC 88205
QCP 2560	**VKPC 88810**
QCP 2561	**VKPC 86603**
QCP 2562	VKPC 82415
QCP 2563	**VKPC 88810**
QCP 2565	**VKPC 84618**
QCP 2566	VKPC 86612
QCP 2567	**VKPC 81607**
QCP 2568	**VKPC 82426**
QCP 2569	VKPA 82426
QCP 2569	**VKPC 82210**
QCP 2570	**VKPA 82210**
QCP 2571	**VKPA 82210**
QCP 2572	**VKPA 82220**
QCP 2573	**VKPC 82428**
QCP 2574	**VKPA 82428**
QCP 2575	**VKPC 82218**
QCP 2576	**VKPA 82218**
QCP 2577	VKPC 83620
QCP 2578	**VKPC 84617**
QCP 2580	**VKPC 87605**
QCP 2581	**VKPC 87836**
QCP 2583	**VKPC 87838**
QCP 2584	**VKPC 87828**
QCP 2585	**VKPC 87837**
QCP 2586	**VKPC 87830**
QCP 2587	**VKPC 82419**
QCP 2590	**VKPC 94423**
QCP 2591	**VKPC 88203**
QCP 2592	VKPA 85609
QCP 2594	**VKPC 91431**
QCP 2595	**VKPA 91407**
QCP 2596	**VKPC 91414**
QCP 2597	**VKPC 91413**
QCP 2598	**VKPC 91404**
QCP 2599	**VKPC 93405**
QCP 2612	**VKPC 92404**
QCP 2613	**VKPC 91405**
QCP 2614	**VKPC 87833**
QCP 2615	**VKPC 82424**
QCP 2634	**VKPC 87610**
QCP 2638	**VKPC 92204**

X	SKF
QCP 2639	**VKPC 94202**
QCP 2642	**VKPC 82632**
QCP 2644	VKPC 82636
QCP 2645	**VKPC 81606**
QCP 2646	**VKPC 88607**
QCP 2647	**VKPC 88612**
QCP 2648	VKPA 82224
QCP 2649	**VKPC 82434**
QCP 2649BH	VKPA 82434
QCP 2650	**VKPA 82666**
QCP 2652	**VKPC 84209**
QCP 2654	**VKPC 84610**
QCP 2655	**VKPA 82431**
QCP 2658	**VKPC 82432**
QCP 2659	VKPA 82626
QCP 2660	**VKPC 86409**
QCP 2661	**VKPC 86413**
QCP 2662	**VKPC 86408**
QCP 2663	**VKPC 84612**
QCP 2664	VKPC 81610
QCP 2665	**VKPC 81608**
QCP 2667	**VKPC 88804**
QCP 2668	**VKPC 88818**
QCP 2671	**VKPC 88611**
QCP 2672	**VKPC 84405**
QCP 2673	**VKPC 84620**
QCP 2674	**VKPC 81609**
QCP 2678	VKPA 82620
QCP 2679	**VKPA 82428**
QCP 2680	**VKPC 82431**
QCP 2681	**VKPC 82434**
QCP 2682	**VKPA 82429**
QCP 2682BH	**VKPC 82429**
QCP 2683	**VKPC 82618**
QCP 2683BH	**VKPA 82618**
QCP 2684	**VKPC 86803**
QCP 2686	**VKPC 85403**
QCP 2688	**VKPC 86205**
QCP 2689	**VKPC 85603**
QCP 2690	**VKPC 82622**
QCP 2691	VKPC 82423
QCP 2692	VKPA 82628
QCP 2694	VKPA 82628
QCP 2695	VKPA 82626
QCP 2696	**VKPC 82224**
QCP 2696BH	VKPA 82224
QCP 2697	VKPA 82620
QCP 2702	**VKPC 91409**
QCP 2704	**VKPC 95405**
QCP 2705	**VKPC 93205**
QCP 2708	VKPA 82627
QCP 2709	**VKPC 95402**
QCP 2734	**VKPC 88616**
QCP 2735	**VKPC 88617**
QCP 2738	**VKPC 84411**
QCP 2740	VKPC 93413
QCP 2743	**VKPC 87400**
QCP 2743	**VKPC 87401**
QCP 2746	**VKPC 85404**
QCP 2800	**VKPC 85610**
QCP 2801	**VKPC 86405**
QCP 2802	**VKPC 88615**

www.bergab.ru Берг АБ bergab@ya.ru Тел. (495)-228-06-21, факс (495) 223-3071

X	SKF
QCP 2804	**VKPC 88616**
QCP 2806	**VKPC 83617**
QCP 2813	**VKPC 97001**
QCP 2815	**VKPC 94434**
QCP 2816	**VKPC 88805**
QCP 2817	**VKPC 88816**
QCP 2819	**VKPC 88809**
QCP 2820	**VKPC 88808**
QCP 2831	VKPC 92821
QCP 2832	**VKPC 92203**
QCP 2833	**VKPC 92802**
QCP 2834	**VKPC 92630**
QCP 2837	**VKPC 92630**
QCP 2838	**VKPC 92650**
QCP 2844	VKPC 99403
QCP 2851	**VKPC 91412**
QCP 2854	VKPC 91410
QCP 2857	**VKPC 91427**
QCP 2860	**VKPC 92615**
QCP 2861	**VKPC 92422**
QCP 2862	**VKPC 81405**
QCP 2864	**VKPC 88827**
QCP 2869	**VKPC 87816**
QCP 2871	**VKPC 98000**
QCP 2873	**VKPC 83425**
QCP 2874	**VKPC 84410**
QCP 2881	**VKPC 92412**
QCP 2882	**VKPC 92408**
QCP 2884	**VKPC 83424**
QCP 2887	**VKPC 84412**
QCP 2888	**VKPC 82642**
QCP 2889	**VKPC 84406**
QCP 2891	**VKPC 83615**
QCP 2892	**VKPC 87607**
QCP 2894	**VKPC 84210**
QCP 2897	VKPC 91201
QCP 2899	**VKPC 82629**
QCP 2900BH	VKPA 82612
QCP 2901	**VKPC 81603**
QCP 2904	**VKPC 82436**
QCP 2906	**VKPC 92209**
QCP 2908	**VKPC 95611**
QCP 2910	**VKPC 81603**
QCP 2911	**VKPC 88619**
QCP 2912	**VKPC 95404**
QCP 2913	**VKPC 92610**
QCP 2914	**VKPC 92823**
QCP 2918	**VKPC 92810**
QCP 2919	VKPC 92405
QCP 2920	**VKPC 83628**
QCP 2922	**VKPC 81204**
QCP 2923	**VKPC 81206**
QCP 2925	**VKPC 81803**
QCP 2928	**VKPC 86609**
QCP 2931	**VKPA 82440**
QCP 2932	**VKPC 82643**
QCP 2933	**VKPA 82634**
QCP 2934	**VKPC 84411**
QCP 2935	**VKPC 82626**
QCP 2941	**VKPC 83401**
QCP 2943	**VKPC 92406**
QCP 2944	**VKPC 83420**

X	SKF
QCP 2945	VKPA 82224
QCP 2946	**VKPC 91415**
QCP 2947	**VKPC 93410**
QCP 2948	**VKPC 82224**
QCP 2949	**VKPC 94424**
QCP 2950	**VKPC 96212**
QCP 2961	**VKPC 82800**
QCP 2962	**VKPC 84613**
QCP 2971	**VKPC 88808**
QCP 2972	**VKPC 95423**
QCP 2974	**VKPC 92820**
QCP 2976	VKPC 92420
QCP 2978	**VKPC 91613**
QCP 2979	VKPC 91610
QCP 2981	**VKPC 91606**
QCP 2984	VKPC 82635
QCP 2985	**VKPC 82647**
QCP 2986	**VKPC 82202**
QCP 2987	**VKPA 82648**
QCP 2989	**VKPC 88619**
QCP 2990	**VKPC 84407**
QCP 2991	**VKPC 96204**
QCP 2995	**VKPA 82410**
QCP 2997	**VKPC 86206**
QCP 2997BH	**VKPA 86206**
QCP 3000	**VKPC 82431**
QCP 3000BH	**VKPA 82431**
QCP 3024	VKPC 92821
QCP 3030	**VKPC 92634**
QCP 3035	VKPC 99405
QCP 3036	**VKPC 96204**
QCP 3037	**VKPC 96210**
QCP 3046	**VKPC 91607**
QCP 3053	VKPA 82620
QCP 3058	**VKPC 85409**
QCP 3059	**VKPC 85611**
QCP 3060	**VKPC 87404**
QCP 3067	**VKPC 88615**
QCP 3070	**VKPC 83630**
QCP 3074	**VKPC 82245**
QCP 3084	**VKPC 85211**
QCP 3090	**VKPC 86618**
QCP 3091	**VKPC 86619**
QCP 3092	**VKPC 82660**
QCP 3093	**VKPC 81612**
QCP 3095	**VKPC 81800**
QCP 3096	**VKPC 88826**
QCP 3097	**VKPC 92208**
QCP 3098	**VKPC 97200**
QCP 3100	**VKPC 84408**
QCP 3101	**VKPC 84409**
QCP 3102	**VKPC 82638**
QCP 3103	VKPC 88820
QCP 3104	**VKPC 88824**
QCP 3105	**VKPC 88622**
QCP 3106	**VKPC 86408**
QCP 3107	**VKPC 81805**
QCP 3109	**VKPC 88831**
QCP 3110	**VKPC 82650**
QCP 3111	**VKPC 82651**
QCP 3112	VKPC 82649
QCP 3113	**VKPC 82653**

X	SKF
QCP 3113G	**VKPA 82653**
QCP 3114	**VKPC 82230**
QCP 3114G	**VKPA 82230**
QCP 3115	**VKPC 82240**
QCP 3116	**VKPC 88203**
QCP 3119	**VKPC 88836**
QCP 3122	**VKPC 95423**
QCP 3123	**VKPC 95010**
QCP 3124	**VKPC 86621**
QCP 3125	**VKPC 87813**
QCP 3126	**VKPC 93601**
QCP 3127BH	**VKPA 82435**
QCP 3129	**VKPC 91804**
QCP 3130	**VKPC 91405**
QCP 3135	**VKPC 85620**
QCP 3136	**VKPC 86413**
QCP 3137	**VKPC 86606**
QCP 3138	**VKPC 86616**
QCP 3139	**VKPC 86615**
QCP 3140	**VKPC 86212**
QCP 3141	**VKPC 82214**
QCP 3142	**VKPC 82432**
QCP 3153	**VKPC 81409**
QCP 3154	**VKPC 81406**
QCP 3155	**VKPC 81611**
QCP 3156	**VKPC 81615**
QCP 3157	**VKPC 81210**
QCP 3162	**VKPC 83636**
QCP 3163	**VKPC 83810**
QCP 3165	**VKPC 83428**
QCP 3168	**VKPC 85622**
QCP 3170	**VKPC 88625**
QCP 3172	**VKPC 88821**
QCP 3173	**VKPC 88828**
QCP 3174	**VKPC 97201**
QCP 3175	**VKPC 93601**
QCP 3176	VKPC 87814
QCP 3179	**VKPC 86209**
QCP 3180	**VKPC 99407**
QCP 3182	**VKPC 95426**
QCP 3186	**VKPC 86603**
QCP 3190	**VKPC 95612**
QCP 3192	**VKPC 97201**
QCP 3195	**VKPC 81206**
QCP 3201	**VKPC 86601**
QCP 3202	**VKPC 86604**
QCP 3208	**VKPC 82441**
QCP 3208BH	**VKPA 82441**
QCP 3209	**VKPC 82652**
QCP 3211	**VKPC 82645**
QCP 3212	**VKPC 81402**
QCP 3212BH	**VKPA 81402**
QCP 3213	**VKPC 81802**
QCP 3215	**VKPC 88830**
QCP 3216	**VKPC 88829**
QCP 3218	**VKPC 82437**
QCP 3219	**VKPC 82646**
QCP 3220	**VKPC 81206**
QCP 3221	**VKPC 82224**
QCP 3221BH	VKPA 82224
QCP 3222	**VKPC 92209**
QCP 3223	**VKPC 83428**

www.bergab.ru Берг АБ bergab@ya.ru Тел. (495)-228-06-21, факс (495) 223-3071

X	SKF
QCP 3224	**VKPC 84215**
QCP 3225	**VKPC 88825**
QCP 3226	**VKPC 86631**
QCP 3227	**VKPC 86415**
QCP 3228	**VKPC 86216**
QCP 3229	**VKPC 86618**
QCP 3234	**VKPC 93411**
QCP 3235	**VKPC 93415**
QCP 3237	VKPC 95610
QCP 3238	**VKPC 92645**
QCP 3243	**VKPC 84620**
QCP 3244	**VKPC 91417**
QCP 3245	**VKPC 94602**
QCP 3248	**VKPC 88824**
QCP 3250	**VKPC 95614**
QCP 3255	**VKPC 85613**
QCP 3257	VKPC 87814
QCP 3262	**VKPA 91441**
QCP 3263	**VKPC 91405**
QCP 3272	**VKPC 95800**
QCP 3274	**VKPC 84409**
QCP 3276	**VKPC 93601**
QCP 3278	**VKPC 94603**
QCP 3282	**VKPC 92822**
QCP 3287	VKPA 82620
QCP 3288	**VKPC 87813**
QCP 3291	**VKPC 87835**
QCP 3292	**VKPC 85622**
QCP 3293	**VKPC 85621**
QCP 3297	VKPC 81621
QCP 3298	**VKPC 81408**
QCP 3299	**VKPC 86215**
QCP 3301	**VKPC 86630**
QCP 3302	**VKPA 91441**
QCP 3304	**VKPC 81407**
QCP 3305	**VKPC 86217**
QCP 3306	**VKPC 81620**
QCP 3313	**VKPC 84216**
QCP 3315	**VKPC 82249**
QCP 3316	VKPC 82451
QCP 3319	**VKPC 81624**
QCP 3322	**VKPC 83635**
QCP 3323	**VKPC 83636**
QCP 3326	**VKPC 81411**
QCP 3348	**VKPC 92926**
QCP 3364	**VKPC 82247**
QCP 3365	**VKPC 81215**
QCP 3366	**VKPC 82665**
QCP 3367	**VKPC 82246**
QCP 3367BH	**VKPA 82246**
QCP 3369	**VKPC 81622**
QCP 3370	**VKPC 82214**
QCP 3376	**VKPC 83811**
QCP 3377	**VKPA 82670**
QCP 3378	**VKPA 82670**
QCP 3378	**VKPA 82670**
QCP 3379	**VKPA 82671**
QCP 3384	**VKPC 88844**
QCP 3390	**VKPC 86633**
QCP 3397	**VKPC 88631**
QCP 3398	**VKPC 88605**
QCP 3399BH	**VKPA 82428**

X	SKF
QCP 3400	**VKPC 95423**
QCP 3401	**VKPC 95424**
QCP 3402	**VKPC 88835**
QCP 3403	**VKPC 82432**
QCP 3404	**VKPC 81204**
QCP 3405	**VKPC 82429**
QCP 3405BH	**VKPA 82429**
QCP 3407BH	**VKPA 82240**
QCP 3408	**VKPC 84415**
QCP 3411	**VKPC 87203**
QCP 3412	**VKPC 87203**
QCP 3421	**VKPC 83420**
QCP 3423	VKPA 82604
QCP 3423BH	VKPA 82612
QCP 3709AP	**VKPC 87200**
QCP 3710	VKPC 87206
QCP 3746	**VKPC 85404**
QCP 4100	**VKPC 94425**
QCP 4163	**VKPC 83810**
QCP 4200	**VKPC 94425**
QCP 4220	**VKPC 82662**
QCP 4220	**VKPC 82665**
QCP 4453	**VKPC 81401**
QCP 4453BH	**VKPA 81401**

RUVILLE

X	SKF
65001	**VKPC 88609**
65005	**VKPC 88603**
65008	**VKPC 88605**
65010	**VKPC 88610**
65011	**VKPC 88607**
65012	**VKPC 88611**
65018	**VKPC 88615**
65020	**VKPC 88614**
65021	**VKPC 88616**
65030	**VKPC 88802**
65035	**VKPC 88612**
65050	**VKPC 88826**
65100	**VKPC 88807**
65104	**VKPC 88809**
65108	**VKPC 88803**
65112	**VKPC 88827**
65123	**VKPC 88816**
65125	**VKPC 88608**
65137	**VKPC 88825**
65138	**VKPC 88828**
65139	**VKPC 88835**
65140	**VKPC 88613**
65145	**VKPC 88620**
65149	**VKPC 88625**
65155	**VKPC 88808**
65160	**VKPC 88604**
65175	**VKPC 88813**
65177	**VKPC 88619**
65191	**VKPC 88810**
65192	**VKPC 88804**
65202	**VKPC 84608**
65203	**VKPC 84606**
65204	**VKPC 84600**
65205	**VKPC 84201**
65206	**VKPC 84607**

X	SKF
65211	**VKPC 84601**
65222	**VKPA 87608**
65222	**VKPC 82637**
65236	**VKPC 84407**
65240	**VKPC 84208**
65242	**VKPC 84209**
65243	**VKPC 84412**
65244	**VKPC 84403**
65248	**VKPC 84210**
65249	**VKPC 84406**
65250	**VKPC 84205**
65252	**VKPC 84405**
65254	**VKPC 84609**
65255	**VKPC 84207**
65260	**VKPC 84620**
65265	**VKPC 84409**
65290	**VKPC 84408**
65291	**VKPC 84411**
65293	**VKPC 84618**
65295	**VKPC 84610**
65296	**VKPC 84617**
65297	**VKPC 84616**
65301	**VKPA 85605**
65303	**VKPC 85203**
65304	**VKPC 85600**
65305	**VKPA 85608**
65306	**VKPC 85403**
65307	**VKPC 85201**
65308	**VKPC 85404**
65310	**VKPC 85400**
65315	**VKPC 85611**
65318	**VKPC 85610**
65322	**VKPC 85404**
65325	**VKPC 85407**
65327	**VKPC 85408**
65333	**VKPC 85202**
65343	**VKPC 85211**
65344	**VKPC 85620**
65346	**VKPC 85613**
65347	**VKPA 85609**
65355	**VKPC 85603**
65361	**VKPC 85206**
65365	**VKPC 85409**
65377	**VKPC 85401**
65380	**VKPC 85406**
65402	**VKPC 81607**
65404	**VKPC 81608**
65405	**VKPC 81206**
65406	**VKPC 81609**
65407	**VKPC 81803**
65410	**VKPC 81400**
65410G	**VKPA 81400**
65412	**VKPC 81620**
65413	**VKPC 81621**
65415	**VKPC 81606**
65420	**VKPC 81200**
65430	**VKPC 81401**
65430G	**VKPA 81401**
65440	**VKPC 81605**
65444	**VKPC 82419**
65450	**VKPC 81602**
65452	**VKPC 81612**

www.bergab.ru Берг АБ bergab@ya.ru Тел. (495)-228-06-21, факс (495) 223-3071

www.bergab.ru Берг АБ bergab@ya.ru Тел. (495)-228-06-21, факс (495) 223-3071

X	SKF
65453	VKPC 81800
65455	VKPC 81204
65457	VKPC 81805
65458	VKPC 81603
65462	VKPC 81610
65465	VKPC 86619
65466	VKPC 81601
65468	VKPC 81210
65470	VKPC 81615
65471	VKPC 81611
65472	VKPC 81802
65511	VKPC 86206
65511G	VKPA 86206
65514	VKPC 86209
65515	VKPC 86216
65516	VKPC 86415
65520	VKPC 86413
65522	VKPC 86409
65525	VKPC 86601
65526	VKPC 86604
65527	VKPC 86623
65528	VKPC 86602
65533	VKPC 86413
65534	VKPC 86606
65535	VKPC 86603
65536	VKPC 86615
65537	VKPC 86616
65538	VKPC 82638
65541	VKPC 86603
65562	VKPC 86621
65565	VKPC 86212
65800	VKPC 82631
65802	VKPC 82606
65804	VKPC 82420
65807	VKPC 82616
65810	VKPC 82210
65810G	VKPA 82210
65811	VKPC 82214
65812	VKPC 82647
65815	VKPA 82202
65816	VKPA 82653
65820	VKPC 82622
65821	VKPC 82431
65823	VKPC 82629
65826	VKPC 82660
65827	VKPC 82600
65828	VKPC 82630
65830	VKPC 82224
65830G	VKPA 82224
65833	VKPA 82410
65833	VKPC 82410
65834	VKPC 82431
65834G	VKPA 82431
65835	VKPC 82432
65836	VKPC 82222
65838	VKPC 82208
65839	VKPC 82643
65840	VKPC 82218
65840G	VKPA 82218
65842	VKPC 82604
65843	VKPC 82424
65844	VKPC 82418

X	SKF
65847	VKPC 82608
65848	VKPC 82416
65850	VKPA 82202
65851	VKPC 82622
65852	VKPC 82216
65879	VKPC 82437
65880	VKPC 82618
65880G	VKPA 82618
65881	VKPC 82245
65882	VKPA 82429
65883	VKPC 82645
65884	VKPA 82240
65885	VKPC 82429
65886	VKPC 82450
65887	VKPC 82441
65888	VKPC 83607
65889	VKPC 82646
65890	VKPC 82206
65890G	VKPA 82222
65891	VKPC 82614
65893	VKPC 82428
65893G	VKPA 82428
65896	VKPA 82440
65901	VKPC 83205
65902	VKPC 83200
65903	VKPC 83428
65904	VKPC 83615
65905	VKPC 83401
65908	VKPC 83616
65909	VKPC 83423
65912	VKPC 83424
65915	VKPC 83604
65921	VKPC 83635
65978	VKPC 83630
65979	VKPC 83206
65980	VKPC 83420
65982	VKPC 83425
65983	VKPC 82652
66002	VKPC 82201
66014	VKPC 82623
66015	VKPC 82621
66018	VKPC 82635
66019	VKPC 82633
66021	VKPC 82621
66022	VKPC 82632
66024	VKPC 82800
66025	VKPC 82436
66032	VKPC 82636
66044	VKPC 82423
66101	VKPC 87200
66105	VKPC 87813
66402	VKPC 84613
66410	VKPC 84611
66420	VKPC 84612
66510	VKPC 86609
66515	VKPC 86614
66530	VKPC 86618
66535	VKPC 86618
66620	VKPC 83626
66623	VKPC 83617
66628	VKPC 83617
66635	VKPC 83627

X	SKF
66805	VKPC 92404
66806	VKPC 92821
66807	VKPC 92209
66808	VKPC 92207
66812	VKPC 92634
66814	VKPC 92823
66820	VKPC 92822
66822	VKPC 92204
66824	VKPC 92208
66826	VKPC 92810
66834	VKPC 92205
66845	VKPC 92408
66848	VKPC 92412
66878	VKPC 92406
66900	VKPC 91616
66903	VKPC 91428
66908	VKPA 91409
66909	VKPC 91606
66910	VKPC 91402
66913	VKPC 91427
66918	VKPC 91405
66919	VKPA 91407
66920	VKPC 91617
66921	VKPC 91413
66922	VKPA 91417
66932	VKPC 91601
66935	VKPA 91800
66970	VKPA 91613
67002	VKPC 94424
67010	VKPC 94002
67015	VKPC 94434
67020	VKPC 94202
67042	VKPC 84620
67210	VKPC 88200
67210G	VKPA 88200
67300	VKPC 95422
67301	VKPC 95602
67310	VKPC 95004
67312	VKPC 95405
67314	VKPC 95008
67325	VKPC 95010
67330	VKPC 95611
67333	VKPC 95404
67334	VKPC 95427
67335	VKPC 95423
67338	VKPC 95010
67339	VKPC 95424
67340	VKPC 95402
67343	VKPC 95610
67410	VKPC 93410
67420	VKPC 93601
67440	VKPC 93205
67450	VKPC 87404
67460	VKPC 87814
67705	VKPC 96212
67706	VKPC 96402
67707	VKPC 96210
67730	VKPC 96204
67801	VKPC 88204
67802	VKPC 81406
67803	VKPC 81405
67804	VKPC 81409

www.bergab.ru Берг АБ bergab@ya.ru Тел. (495)-228-06-21, факс (495) 223-3071

www.bergab.ru Берг АБ bergab@ya.ru Тел. (495)-228-06-21, факс (495) 223-3071

X	SKF
67905	**VKPC 87203**
67915	**VKPC 97001**
68003	**VKPC 87835**
68102	**VKPC 99406**

SALERI

X	SKF
PA 102	**VKPC 85600**
PA 103	VKPC 85200
PA 105P	**VKPC 84400**
PA 107	**VKPC 84200**
PA 114	**VKPC 86203**
PA 115P	**VKPA 86200**
PA 115	**VKPC 86200**
PA 118	**VKPC 86607**
PA 120	**VKPC 83424**
PA 121	**VKPC 87200**
PA 122	VKPC 88600
PA 124	VKPC 83405
PA 128P	**VKPC 82401**
PA 129P	VKPC 82403
PA 131	**VKPC 82205**
PA 141	**VKPC 82404**
PA 142	VKPC 82402
PA 176	**VKPC 85207**
PA 191	VKPC 83409
PA 193	**VKPC 83613**
PA 196	**VKPC 83208**
PA 197	**VKPC 82204**
PA 198P	VKPA 82206
PA 200	**VKPC 86208**
PA 201AC	**VKPC 87206**
PA 201	**VKPC 87200**
PA 203	**VKPC 84609**
PA 206P	**VKPA 82202**
PA 207	**VKPC 88803**
PA 208	**VKPC 86403**
PA 213	VKPC 81403
PA 215	**VKPC 84600**
PA 217	VKPC 83408
PA 218	**VKPC 84201**
PA 224	**VKPC 83203**
PA 226P	**VKPC 82421**
PA 227	VKPC 82200
PA 228	VKPC 82400
PA 229P	**VKPC 83200**
PA 231	**VKPC 88200**
PA 232	VKPC 83204
PA 234P	**VKPC 82206**
PA 235S	VKPC 84606
PA 236	**VKPC 81400**
PA 238/E/S	**VKPC 88807**
PA 239	**VKPC 88807**
PA 248S	**VKPC 84607**
PA 249	**VKPC 88609**
PA 250P	VKPC 82417
PA 251	VKPC 82406
PA 252	**VKPC 82412**
PA 254	VKPC 82411
PA 256P	VKPC 83606
PA 257	**VKPC 86610**
PA 259	**VKPC 83206**

X	SKF
PA 263	**VKPC 91400**
PA 264	VKPC 92201
PA 267	**VKPC 85203**
PA 269P	**VKPC 83602**
PA 270	**VKPC 85204**
PA 273	VKPC 92207
PA 274	**VKPC 94400**
PA 275	**VKPC 84205**
PA 275E	**VKPC 84205**
PA 276	**VKPC 82201**
PA 278P	**VKPC 81200**
PA 280	**VKPC 86205**
PA 281	**VKPC 94200**
PA 283	VKPC 83614
PA 284	VKPC 83614
PA 288S	**VKPC 82208**
PA 289	VKPC 86411
PA 291P	**VKPC 93402**
PA 293	**VKPC 86403**
PA 295	**VKPC 82404**
PA 296	**VKPC 82405**
PA 297P	**VKPC 83607**
PA 300	**VKPC 82409**
PA 301	**VKPA 93204**
PA 303P	**VKPA 93204**
PA 306P	**VKPA 82222**
PA 307	**VKPC 83612**
PA 308	VKPC 91403
PA 312	VKPC 91616
PA 319	VKPC 86410
PA 320	**VKPC 91402**
PA 321	**VKPC 81601**
PA 322P	**VKPC 81605**
PA 327	VKPC 86406
PA 329	**VKPC 86401**
PA 347P	**VKPC 85605**
PA 350	**VKPC 91200**
PA 351	VKPC 83402
PA 352	VKPC 88602
PA 354	VKPC 83620
PA 355	**VKPC 85201**
PA 356	**VKPC 82630**
PA 357	**VKPC 83616**
PA 358P	**VKPC 85202**
PA 360P	**VKPC 82410**
PA 361	**VKPC 83618**
PA 363	**VKPC 92802**
PA 364	**VKPC 86405**
PA 370P	VKPC 86204
PA 371P	**VKPC 84206**
PA 372	VKPC 84202
PA 376P	**VKPC 83608**
PA 377P	**VKPC 81605**
PA 378	**VKPC 85600**
PA 379S	**VKPC 84608**
PA 380P	**VKPC 81805**
PA 381	**VKPC 83616**
PA 382	**VKPC 88605**
PA 383	VKPC 88603
PA 384	**VKPC 82216**
PA 386	**VKPC 88802**
PA 387	VKPC 88800

X	SKF
PA 388P	VKPA 85606
PA 389	**VKPC 83403**
PA 390	**VKPC 92203**
PA 391P	VKPC 99403
PA 392P	**VKPC 99404**
PA 393	**VKPC 84616**
PA 394P	**VKPC 86202**
PA 396	VKPC 82408
PA 397	**VKPC 86623**
PA 398P	**VKPC 84207**
PA 399	**VKPA 93207**
PA 401	**VKPC 93405**
PA 403	**VKPA 93403**
PA 403P	**VKPC 93403**
PA 407PS	**VKPC 84610**
PA 409	**VKPC 88812**
PA 410	**VKPC 88805**
PA 411P	**VKPA 85608**
PA 412	**VKPC 88813**
PA 413	**VKPC 86602**
PA 414	VKPC 83620
PA 415	**VKPC 83622**
PA 416	**VKPC 83605**
PA 417	VKPC 83623
PA 418	**VKPC 83603**
PA 419	**VKPC 83423**
PA 420	**VKPC 83622**
PA 423P	**VKPC 82413**
PA 426P	**VKPC 85406**
PA 427P	**VKPC 85400**
PA 428	**VKPC 87202**
PA 429P	**VKPC 83401**
PA 430	**VKPC 86413**
PA 431	**VKPC 88610**
PA 432	**VKPC 92205**
PA 433	VKPC 82416
PA 434	**VKPC 84601**
PA 435	**VKPC 92401**
PA 436P	VKPA 85607
PA 437P	**VKPC 85206**
PA 438	VKPC 82414
PA 443	**VKPC 87205**
PA 445P	**VKPC 83617**
PA 447	**VKPC 88613**
PA 448	**VKPC 87207**
PA 449	VKPC 82418
PA 450P	VKPA 82621
PA 451P	VKPC 83627
PA 453	**VKPC 82621**
PA 454	**VKPC 82609**
PA 455	**VKPC 82600**
PA 456	**VKPC 94202**
PA 457	**VKPC 82604**
PA 458	**VKPC 88604**
PA 459	**VKPC 84403**
PA 460	**VKPC 81401**
PA 461	**VKPC 86402**
PA 462P	**VKPA 86407**
PA 462P	**VKPC 86407**
PA 463P	VKPC 82633
PA 464P	**VKPC 86206**
PA 465	**VKPC 88608**

www.bergab.ru Берг АБ bergab@ya.ru Тел. (495)-228-06-21, факс (495) 223-3071

X	SKF
PA 466P	**VKPC 88818**
PA 467A	**VKPC 82214**
PA 469	**VKPC 84611**
PA 470	**VKPC 82606**
PA 471P	**VKPC 87403**
PA 472	**VKPC 82614**
PA 473	**VKPC 86609**
PA 476P	**VKPC 82616**
PA 477	**VKPC 82623**
PA 478P	**VKPA 82410**
PA 480	VKPC 82602
PA 483	**VKPC 83604**
PA 484P	**VKPC 82419**
PA 485	VKPA 82624
PA 486P	VKPA 82617
PA 487P	**VKPA 82218**
PA 488P	**VKPC 84208**
PA 490P	**VKPA 82608**
PA 492	**VKPC 86614**
PA 493	**VKPC 88620**
PA 494P	VKPA 85609
PA 495	**VKPC 84618**
PA 496	**VKPC 84617**
PA 497	**VKPC 86603**
PA 498	**VKPC 84601**
PA 499	**VKPC 82420**
PA 500	**VKPC 87203**
PA 501	**VKPC 83624**
PA 502	**VKPC 83625**
PA 503	**VKPC 86622**
PA 504P	**VKPC 82616**
PA 505	**VKPA 82210**
PA 506	**VKPC 84600**
PA 507	**VKPC 82424**
PA 509P	**VKPC 82616**
PA 510	**VKPC 81607**
PA 511P	**VKPC 83205**
PA 512P	**VKPC 85407**
PA 513P	**VKPC 83424**
PA 515P	**VKPC 93205**
PA 516P	**VKPC 92204**
PA 517	**VKPC 93409**
PA 518P	**VKPC 88203**
PA 519	**VKPA 81400**
PA 521	**VKPA 81401**
PA 524P	**VKPC 85408**
PA 525P	**VKPA 82220**
PA 526	**VKPC 84609**
PA 527P	**VKPC 85401**
PA 528P	VKPA 82224
PA 529P	**VKPC 82224**
PA 534P	**VKPA 82431**
PA 547	**VKPA 82429**
PA 552P	**VKPA 82618**
PA 557	**VKPC 86413**
PA 561	**VKPC 88619**
PA 562	**VKPC 88607**
PA 563	**VKPC 86408**
PA 564	**VKPC 82800**
PA 567	**VKPC 84405**
PA 569	VKPA 82610
PA 570	**VKPA 82210**

X	SKF
PA 571	**VKPC 88614**
PA 573	**VKPC 81608**
PA 573	**VKPC 81609**
PA 574	**VKPC 84603**
PA 575P	**VKPC 85603**
PA 576	**VKPC 82631**
PA 581P	VKPC 82423
PA 582P	VKPC 82636
PA 583	**VKPC 82632**
PA 584	**VKPC 83630**
PA 585P	**VKPC 82616**
PA 587P	**VKPC 82616**
PA 588P	**VKPC 82616**
PA 589P	**VKPC 81206**
PA 590P	**VKPC 84404**
PA 590P	**VKPC 84620**
PA 591	**VKPC 82622**
PA 592	VKPA 82426
PA 593P	**VKPA 82626**
PA 594	**VKPC 88808**
PA 595	**VKPC 88809**
PA 596	**VKPC 88817**
PA 599	**VKPC 84209**
PA 601	**VKPC 88827**
PA 604	**VKPC 92404**
PA 607	**VKPA 82428**
PA 608	VKPA 82628
PA 609	**VKPC 92601**
PA 610	**VKPC 88810**
PA 611P	**VKPC 86409**
PA 612	VKPA 82612
PA 613P	**VKPC 94423**
PA 614P	**VKPA 82202**
PA 615	**VKPC 84612**
PA 616	**VKPC 88612**
PA 618	**VKPC 88804**
PA 619P	**VKPC 81606**
PA 620P	VKPC 81610
PA 624P	**VKPC 85610**
PA 630	VKPC 86612
PA 631	**VKPC 82432**
PA 632	VKPC 82415
PA 633P	**VKPC 83424**
PA 635	VKPC 83411
PA 636	**VKPC 86604**
PA 637	**VKPA 82429**
PA 638P	VKPA 82620
PA 639P	**VKPA 82620**
PA 641	**VKPC 86601**
PA 645P	**VKPC 86209**
PA 646	**VKPC 88611**
PA 647	VKPC 88820
PA 648P	**VKPC 83615**
PA 649P	**VKPC 83420**
PA 650	**VKPC 84613**
PA 653	**VKPC 84411**
PA 655P	**VKPC 81204**
PA 656	**VKPC 85403**
PA 657	**VKPC 85404**
PA 658	**VKPC 88615**
PA 659	**VKPC 88617**
PA 660	**VKPC 88616**

X	SKF
PA 663P	**VKPC 81803**
PA 664P	**VKPC 81612**
PA 665P	**VKPC 81800**
PA 667	**VKPC 84210**
PA 668	**VKPC 84410**
PA 669	**VKPC 84406**
PA 670P	**VKPC 83425**
PA 671	**VKPC 88816**
PA 673	**VKPC 83628**
PA 674P	**VKPC 86618**
PA 675	**VKPC 85404**
PA 680	VKPC 85205
PA 681P	**VKPC 87404**
PA 682P	**VKPC 87400**
PA 683P	**VKPC 87401**
PA 684	**VKPC 92408**
PA 685	**VKPC 92412**
PA 687	**VKPC 82436**
PA 688	**VKPC 82629**
PA 690	**VKPA 82634**
PA 691P	**VKPC 81206**
PA 692P	**VKPC 82431**
PA 693P	**VKPA 82202**
PA 694	**VKPA 82440**
PA 695	**VKPC 82440**
PA 699P	**VKPA 82431**
PA 703P	**VKPA 82648**
PA 704P	**VKPA 82648**
PA 705	**VKPC 82201**
PA 706	**VKPC 82647**
PA 707P	**VKPC 85211**
PA 708P	**VKPC 85611**
PA 709P	**VKPC 85409**
PA 710	**VKPC 82660**
PA 711P	**VKPA 86206**
PA 712	**VKPC 84407**
PA 713	**VKPC 86621**
PA 714	**VKPC 88826**
PA 715	**VKPC 88622**
PA 716	**VKPC 88824**
PA 717	**VKPC 92208**
PA 718	**VKPC 88821**
PA 719P	**VKPC 82245**
PA 720P	**VKPC 83428**
PA 721P	**VKPA 86212**
PA 722P	**VKPA 86217**
PA 723P	**VKPC 82431**
PA 724P	**VKPC 84408**
PA 725	**VKPC 84412**
PA 726	**VKPC 93410**
PA 727P	**VKPC 82218**
PA 729	**VKPC 88831**
PA 731P	**VKPA 82230**
PA 732P	**VKPC 82230**
PA 733	**VKPA 82653**
PA 734P	**VKPA 82222**
PA 735P	**VKPC 82206**
PA 736P	**VKPC 84409**
PA 737P	**VKPC 93601**
PA 738P	VKPC 87814
PA 739P	**VKPC 82646**
PA 742P	**VKPC 82662**

X	SKF
PA 745	**VKPC 82638**
PA 746	**VKPC 94002**
PA 747	**VKPC 94434**
PA 748	**VKPC 88625**
PA 749	**VKPC 92406**
PA 750	**VKPC 92810**
PA 751	**VKPC 87813**
PA 752	**VKPC 86606**
PA 753	**VKPC 86615**
PA 754	**VKPC 86616**
PA 755P	**VKPC 86619**
PA 756P	**VKPC 87607**
PA 758	**VKPC 87835**
PA 759P	**VKPC 87816**
PA 760	**VKPC 86619**
PA 761P	**VKPC 87404**
PA 762P	**VKPC 81802**
PA 762P	**VKPC 81802**
PA 764	**VKPC 82653**
PA 765	**VKPC 88836**
PA 766	**VKPC 82643**
PA 767	**VKPC 97000**
PA 771	**VKPC 93602**
PA 772	**VKPC 94002**
PA 773	**VKPC 94452**
PA 774	**VKPC 94424**
PA 775	**VKPC 95008**
PA 776	**VKPC 95405**
PA 777	**VKPC 95010**
PA 778	**VKPC 95422**
PA 779	**VKPC 95611**
PA 781	**VKPC 95004**
PA 782	**VKPC 95424**
PA 783	**VKPC 92420**
PA 784	**VKPC 92630**
PA 785	**VKPC 99406**
PA 786	**VKPC 99407**
PA 788	**VKPC 96204**
PA 789	**VKPC 96212**
PA 790	**VKPC 91413**
PA 791	**VKPA 91431**
PA 792	**VKPC 91405**
PA 793	**VKPC 91424**
PA 794	**VKPC 91428**
PA 795	**VKPC 91404**
PA 796	**VKPC 91413**
PA 797	**VKPC 91613**
PA 798	**VKPC 91604**
PA 799	**VKPC 91415**
PA 800	**VKPC 91606**
PA 801	**VKPC 96210**
PA 802	**VKPC 96402**
PA 803	**VKPC 97200**
PA 804	**VKPC 93409**
PA 805	**VKPC 93600**
PA 807	**VKPC 95610**
PA 808	**VKPC 94434**
PA 809	**VKPC 92207**
PA 811	**VKPC 92650**
PA 812	**VKPC 92823**
PA 814	**VKPC 96204**
PA 816	**VKPC 86212**

X	SKF
PA 817	**VKPC 86217**
PA 818	**VKPC 91414**
PA 820	**VKPC 91607**
PA 821	**VKPC 91804**
PA 823	**VKPC 82645**
PA 824	**VKPC 82437**
PA 825	**VKPA 82441**
PA 826	**VKPC 82441**
PA 827	**VKPA 82240**
PA 828	**VKPC 81615**
PA 829	**VKPA 81402**
PA 830	**VKPC 86415**
PA 831	**VKPC 86216**
PA 833	**VKPC 82652**
PA 834	**VKPA 82670**
PA 835	**VKPC 88828**
PA 836	**VKPC 88824**
PA 837	**VKPC 88828**
PA 838	**VKPC 88824**
PA 839	**VKPC 88836**
PA 840	**VKPC 81402**
PA 843	**VKPC 82650**
PA 844	**VKPC 82651**
PA 845	VKPC 82649
PA 846	**VKPC 81210**
PA 847	**VKPC 81611**
PA 848	**VKPC 84215**
PA 849	**VKPC 87600**
PA 852	**VKPC 82247**
PA 854	**VKPA 82246**
PA 855	**VKPC 82246**
PA 860	VKPC 82451
PA 861	**VKPC 82645**
PA 864	**VKPC 81620**
PA 865	VKPC 81621
PA 866	**VKPC 81408**
PA 867	**VKPC 81622**
PA 868	**VKPC 88829**
PA 869	**VKPC 83810**
PA 871	**VKPC 90200**
PA 874	**VKPA 82666**
PA 875	**VKPA 82429**
PA 877	**VKPC 84409**
PA 879	**VKPC 84216**
PA 880	**VKPC 86631**
PA 881	**VKPC 86630**
PA 882	**VKPC 86630**
PA 883	**VKPC 81625**
PA 884	**VKPC 81624**
PA 885	**VKPC 83636**
PA 886	**VKPC 83615**
PA 887	**VKPC 85613**
PA 890	**VKPC 85620**
PA 892	**VKPC 95612**
PA 895	**VKPC 92408**
PA 896	**VKPC 96212**
PA 897	**VKPC 93410**
PA 898	**VKPC 87203**
PA 899	**VKPC 95423**
PA 903	VKPC 94422
PA 904	VKPC 99405
PA 907	**VKPC 87610**

X	SKF
PA 908	**VKPC 93601**
PA 909	VKPC 92821
PA 910	**VKPC 91427**
PA 911	**VKPC 92601**
PA 913	**VKPC 82249**
PA 914	**VKPC 82665**
PA 915	**VKPC 88830**
PA 918	**VKPC 88825**
PA 920	**VKPA 82671**
PA 921	**VKPC 92209**
PA 922	**VKPC 82665**
PA 928	**VKPC 90402**
PA 931	**VKPC 88206**
PA 932	**VKPC 88631**
PA 935	**VKPC 85220**
PA 936	**VKPC 85624**
PA 937	**VKPC 85621**
PA 939	**VKPC 95426**
PA 941	**VKPC 81215**
PA 942	**VKPC 81405**
PA 943	**VKPC 81406**
PA 944	**VKPC 81623**
PA 945	**VKPC 81407**
PA 946	**VKPC 81411**
PA 947	**VKPA 82618**
PA 950	**VKPC 84415**
PA 951	**VKPC 88842**
PA 953	**VKPC 88844**
PA 954	**VKPC 88835**
PA 957	**VKPC 90202**
PA 958	**VKPC 97201**
PA 967	**VKPC 88845**
PA 969	**VKPC 86633**
PA 970	**VKPC 86416**
PA 971	**VKPC 87607**
PA 976	**VKPA 91441**
PA 981	**VKPC 81620**
PA 983	**VKPC 82250**
PA 988	**VKPC 81805**
PA 1000	VKPC 91617
PA 1001	**VKPC 83811**
PA 1056	**VKPC 86416**
PA 1060	**VKPC 81411**
PA 1081	**VKPC 98000**
PA 1089	**VKPC 95404**
PA 1096	**VKPC 92422**
PA 1098	VKPC 92405

VALEO

506000	**PE 0131**	**VKPC 84207**
506001	**PE 0009**	**VKPC 84205**
506003	**PE 0032**	**VKPC 85400**
506004	**PE 0086**	**VKPC 87403**
506005	**PE 0035**	**VKPC 85407**
506006	**PE 0029**	**VKPC 85202**
506007	**PE 0030**	**VKPC 85206**
506008	**PE 0243**	**VKPC 84208**
506009	**PE 0064**	**VKPC 84600**
506010	**PE 0002**	**VKPC 87200**
506011	**PE 0018**	**VKPC 83401**

X		SKF
506012	PE 0107	VKPC 84209
506013	PE 0020	VKPC 81200
506014	PE 0089	VKPC 83424
506015	PE 0263	VKPC 92204
506016	PE 0087	VKPC 87205
506018	PE 0126	VKPC 87400
506019	PE 0046	VKPC 86413
506020	PE 0063	VKPC 84601
506021	PE 0022	VKPC 81401
506022	PE 0016	VKPC 86206
506023	PE 0264	VKPC 92205
506025	PE 0237	VKPC 87609
506026	PE 0039	VKPC 86610
506028	PE 0116	VKPC 93205
506029	PE 0104	VKPC 83615
506030	PE 0031	VKPC 85401
506031	PE 0028	VKPC 85201
506032	PE 0001	VKPC 83206
506034	PE 0013	VKPC 83200
506035	PE 0055	VKPC 83205
506036	PE 0040	VKPC 82201
506037	PE 0265	VKPC 92404
506040	PE 0074	VKPC 84611
506042	PE 0003	VKPC 86403
506043	PE 0070	VKPC 86402
506044	PE 0077	VKPC 86609
506045	PE 0110	VKPC 87404
506046	PE 0088	VKPC 88611
506047	PE 0128	VKPC 84411
506050	PE 0235	VKPC 86614
506052	PE 0059	VKPC 88610
506053	PE 0056	VKPC 83626
506057	PE 0122	VKPC 88804
506058		VKPC 88818
506059	PE 0008	VKPC 86201
506060	PE 0067	VKPC 88620
506061	PE 0124	VKPC 88810
506063	PE 0057	VKPC 82208
506066	PE 0021	VKPC 81400
506067	PE 0098	VKPC 86407
506068	PE 0024	VKPC 88603
506069	PE 0023	VKPC 88609
506072	PE 0073	VKPC 86603
506073	PE 0072	VKPC 86405
506074	PE 0071	VKPC 86623
506076	PE 0017	VKPC 86602
506078	PE 0066	VKPC 88608
506079	PE 0004	VKPA 82202
506080	PE 0096	VKPC 85610
506084	PE 0036	VKPC 85603
506085	PE 0120	VKPC 85403
506086	PE 0101	VKPC 86408
506087	PE 0080	VKPC 85408
506088	PE 0052	VKPC 83604
506089	PE 0034	VKPA 85608
506091	PE 0266	VKPC 92201
506092	PE 0132	VKPC 82206
506095	PE 0094	VKPC 88604
506097		VKPC 88813
506098	PE 0006	VKPC 82412
506099	PE 0109	VKPC 86409
506100	PE 0007	VKPC 88807

X		SKF
506101	PE 0083	VKPC 82800
506102	PE 0082	VKPC 82632
506103	PE 0267	VKPC 92802
506105	PE 0041	VKPC 81602
506106	PE 0014	VKPC 82630
506107	PE 0112	VKPC 88617
506108	PE 0053	VKPC 83203
506109		VKPC 88615
506110	PE 0111	VKPC 88616
506114	PE 0127	VKPC 87401
506115	PE 0093	VKPC 82432
506117	PE 0106	VKPC 83420
506119	PE 0092	VKPA 82224
506121	PE 0038	VKPC 83403
506122	PE 0037	VKPC 83618
506123	PE 0117	VKPC 82629
506124	PE 0130	VKPC 88619
506127	PE 0129	VKPC 84210
506130	PE 0125	VKPC 81603
506131	PE 0015	VKPC 83603
506132	PE 0085	VKPC 81606
506133	PE 0121	VKPC 84612
506134	PE 0061	VKPC 82614
506135	PE 0060	VKPC 82418
506141	PE 0058	VKPC 88605
506142	PE 0232	VKPC 82631
506143	PE 0113	VKPC 82218
506144	PE 0103	VKPA 82428
506147	PE 0084	VKPC 82621
506148	PE 0011	VKPC 88200
506150	PE 0075	VKPC 88204
506151	PE 0119	VKPC 88203
506153	PE 0123	VKPC 85404
506155	PE 0079	VKPC 84618
506157		VKPC 84617
506158		VKPC 84609
506165	PE 0047	VKPC 84403
506166	PE 0078	VKPC 84616
506167	PE 0048	VKPC 82424
506169	PE 0081	VKPC 88607
506170	PE 0051	VKPC 83423
506173		VKPC 84606
506177		VKPC 84608
506178	PE 0044	VKPC 83617
506182	PE 0033	VKPC 85406
506185	PE 0027	VKPC 85203
506186	PE 0019	VKPC 81601
506188	PE 0095	VKPA 85609
506190	PE 0045	VKPC 81605
506195	PE 0062	VKPC 82622
506215	PE 0050	VKPC 82633
506227	PE 0246	VKPA 81400
506230	PE 0100	VKPC 83614
506240	PE 0099	VKPC 81206
506245	PE 0135	VKPC 83612
506246		VKPA 82410
506247	PE 0137	VKPC 83616
506248	PE 0138	VKPC 82606
506249	PE 0139	VKPC 88802
506252	PE 0142	VKPC 83608
506253	PE 0143	VKPC 83607
506254	PE 0144	VKPC 83612

X		SKF
506256	PE 0146	VKPC 82419
506257	PE 0147	VKPC 82616
506258	PE 0148	VKPC 82623
506259	PE 0149	VKPC 83625
506261	PE 0151	VKPC 82604
506262	PE 0152	VKPC 84601
506264	PE 0154	VKPC 82608
506266	PE 0156	VKPC 88612
506267	PE 0157	VKPC 83627
506268		VKPA 82220
506270	PE 0160	VKPA 82626
506271	PE 0161	VKPA 82431
506272	PE 0162	VKPC 83408
506273	PE 0163	VKPC 83409
506274	PE 0164	VKPC 83620
506275	PE 0165	VKPC 83622
506276	PE 0166	VKPA 82608
506277	PE 0167	VKPC 82622
506278	PE 0168	VKPC 88614
506279		VKPA 82218
506281	PE 0181	VKPC 82642
506282	PE 0182	VKPC 81204
506283	PE 0183	VKPC 84407
506284	PE 0184	VKPC 84406
506285	PE 0185	VKPC 82635
506286	PE 0186	VKPC 82436
506287	PE 0187	VKPC 84408
506289	PE 0189	VKPC 88826
506290	PE 0190	VKPC 83428
506291	PE 0191	VKPC 83425
506292	PE 0192	VKPC 83630
506293	PE 0193	VKPA 82634
506294	PE 0194	VKPA 82202
506295	PE 0195	VKPA 82648
506296	PE 0196	VKPC 82647
506297	PE 0197	VKPC 82638
506298	PE 0198	VKPA 82653
506299	PE 0199	VKPC 82245
506300	PE 0200	VKPC 84412
506301	PE 0201	VKPC 84409
506302	PE 0202	VKPC 82649
506303	PE 0203	VKPC 82650
506304	PE 0204	VKPC 82651
506305	PE 0205	VKPC 88824
506306	PE 0206	VKPC 88622
506307	PE 0207	VKPC 88625
506308	PE 0208	VKPC 85211
506309	PE 0209	VKPC 85611
506310	PE 0210	VKPC 85409
506311	PE 0211	VKPC 86603
506312	PE 0212	VKPA 86212
506314	PE 0214	VKPC 86606
506315	PE 0215	VKPC 86615
506316	PE 0216	VKPC 86616
506317	PE 0217	VKPC 86621
506318	PE 0218	VKPC 87404
506319	PE 0219	VKPC 87607
506320	PE 0220	VKPC 87813
506321	PE 0221	VKPC 93601
506322	PE 0222	VKPC 87814
506323	PE 0223	VKPC 87835
506324		VKPC 87816

www.bergab.ru Берг АБ bergab@ya.ru Тел. (495)-228-06-21, факс (495) 223-3071

SKF is an international industrial Group operating in some 130 countries and is world leader in bearings.

The company was founded in 1907 following the invention of the self-aligning ball bearing by Sven Wingquist and, after only a few years, SKF began to expand all over the world.

Today, SKF has some 45 000 employees and more than 80 manufacturing facilities spread throughout the world. An international sales network includes a large number of sales companies and some 7 000 distributors and retailers. Worldwide availability of SKF products is supported by a comprehensive technical advisory service.

The key to success has been a consistent emphasis on maintaining the highest quality of its products and services. Continuous investment in research and development has also played a vital role, resulting in many examples of epoch-making innovations.

The business of the Group consists of bearings, seals, special steel and a comprehensive range of other high-tech industrial components. The experience gained in these various fields provides SKF with the essential knowledge and expertise required in order to provide the customers with the most advanced engineering products and efficient service.

© Copyright SKF 2003

The contents of this catalogue are the copyright of the publisher and may not be reproduced (even extracts) unless permission is granted. Every care has been taken to ensure the accuracy of the information in this catalogue but no liability can be accepted for any errors or omissions.

Catalogue PUB 80/P1 5360 EN 03

Reg. 471 01:831 · 19 000 · 2003-07

Nya Almqvist & Wiksell Tryckeri, Uppsala, Sweden

www.bergab.ru Берг АБ bergab@ya.ru Тел. (495)-228-06-21, факс (495) 223-3071