rgab.ru Берг АБ bergab@ya.ru Тел. (495)-228-06-21, факс (495) 22

SKF

Y-bearings and Y-bearing units

rgab.ru Берг АБ bergab@ya.ru Тел. (495)-228-06-21, факс (495) 22

rgab.ru Берг АБ bergab@ya.ru Тел. (495)-228-06-21, факс (495) 22

® SKF is a registered trademark of the SKF Group.

© Copyright SKF 2004
The contents of this catalogue are the copyright of the publisher and may not be reproduced (even extracts) unless permission is granted. Every care has been taken to ensure the accuracy of the information contained in this catalogue but no liability can be accepted for any loss or damage whether direct, indirect or consequential arising out of the use of the information contained herein.

Catalogue **5001 E** · September 2004

Printed in Denmark on environmentally friendly, chlorine-free paper (G-Print) by Scanprint as.

rgab.ru Берг АБ bergab@ya.ru Тел. (495)-228-06-21, факс (495) 22

rgab.ru Берг АБ bergab@ya.ru Тел. (495)-228-06-21, факс (495) 22

General 2

Principles of selection and application 11

Y-bearings 53

Y-bearing plummer block units 75

Y-bearing flanged units 109

Y-bearing take-up units 161

Mounting instructions 169

Other related SKF products 197

Product index 211

rgab.ru Берг АБ bergab@ya.ru Тел. (495)-228-06-21, факс (495) 22

rgab.ru Берг АБ bergab@ya.ru Тел. (495)-228-06-21, факс (495) 22

Contents

Foreword **5**

SKF – The knowledge engineering company **6**

Principles of selection and application **11**
Designs 12
Bearing terminology 13
Matrices 16
Selection of Y-bearing unit type 18
Locating on the shaft 19
Loads 20
Seals 21
Permissible operating temperatures 22
Speeds 23
Application note 23
Selection of Y-bearing unit size 24
Load carrying ability and life 24
Selecting the bearing size using the life equations 24
Equivalent dynamic bearing load 26
Dynamic bearing loads 28
Requisite minimum load 28
Axial load carrying ability 28
Selecting the bearing size using the static load carrying capacity 29
Speeds 32
Design of Y-bearing arrangements 34
Axial displacement 34
Initial misalignment 36
Support surfaces 36
Shaft tolerances 37
Rubber seating rings 38
End covers 40
Lubrication and maintenance 42
Grease fills 42
Relubrication 43
Relubrication intervals 44
Storing Y-bearings and Y-bearing units 46
Designation systems 47

rgab.ru Берг АБ bergab@ya.ru Тел. (495)-228-06-21, факс (495) 22

rgab.ru Берг АБ bergab@ya.ru Тел. (495)-228-06-21, факс (495) 22

Product data **51**
Y-bearings 53
Y-bearing plummer block units 75
Y-bearing flanged units 109
Y-bearing take-up units 161

Mounting instructions **169**

Other related SKF products **197**

Product index **211**

rgab.ru Берг АБ bergab@ya.ru Тел. (495)-228-06-21, факс (495) 22

rgab.ru Берг АБ bergab@ya.ru Тел. (495)-228-06-21, факс (495) 22

The SKF brand now stands for more than ever before, and means more to you as a valued customer.

While SKF maintains its leadership as the hallmark of quality bearings throughout the world, new dimensions in technical advances, product support and services have evolved SKF into a truly solutions-oriented supplier, creating greater value for customers.

These solutions encompass ways to bring greater productivity to customers, not only with breakthrough application-specific products, but also through leading-edge design simulation tools and consultancy services, plant asset efficiency maintenance programmes, and the industry's most advanced supply management techniques.

The SKF brand still stands for the very best in rolling bearings, but it now stands for much more.

SKF – The knowledge engineering company

rgab.ru Берг АБ bergab@ya.ru Тел. (495)-228-06-21, факс (495) 22

rgab.ru Берг АБ bergab@ya.ru Тел. (495)-228-06-21, факс (495) 22

Foreword

This catalogue gives a representative overview of the range of Y-bearings and Y-bearing units available from SKF. Compared with the previous SKF catalogue 4002, this catalogue contains considerable alterations and the assortment has been brought up to date.

The data in this catalogue is based on the latest standards and product upgrades. However, SKF reserves the right to make any changes necessary as a result of continuous improvement with respect to materials, design and manufacture.

In accordance with ISO Standard 1000:1992, SI (Système International d'Unités) units are used in this catalogue.

This catalogue contains all the data relevant to Y-bearings and Y-bearing units. All the data required to select a Y-bearing or Y-bearing unit respectively are listed in the product tables. Descriptions of the Y-bearing and Y-bearing unit types including design features and other information precede each product section. General data regarding selecting a Y-bearing or Y-bearing unit type and size, speeds, bearing arrangement design, lubrication, mounting and designations are included in the catalogue too.

The catalogue is designed so that product information is easy to find and use. Each of the 9 chapters listed in the table of contents is clearly identified by a number and colour.

rgab.ru Берг АБ bergab@ya.ru Тел. (495)-228-06-21, факс (495) 22

rgab.ru Берг АБ bergab@ya.ru Тел. (495)-228-06-21, факс (495) 22

SKF – The knowledge engineering company

The business of the SKF Group consists of the design, manufacture and marketing of the world's leading brand of rolling bearings, with a global leadership position in complementary products such as radial seals. SKF also holds an increasingly important position in the market for linear motion products, high precision aerospace bearings, machine tool spindles as well as plant maintenance services and is an established producer of high-quality bearing steel.

The SKF Group maintains specialized business operations to meet the needs of the global marketplace. SKF supports specific market segments with ongoing research and development efforts that have led to a growing number of innovations, new standards and new products.

The Group has global ISO 14001 environmental certification. Individual divisions have been approved for quality certification in accordance with either ISO 9000 or appropriate industry specific standards.

Some 80 manufacturing sites worldwide and sales companies in 70 countries make SKF a truly international corporation. In addition, our 7 000 distributor and dealer partners around the world, e-business marketplace and global distribution system put SKF close to customers for the supply of both products and services. In essence, SKF solutions are available wherever and whenever our customers need them.

Overall, the SKF brand now stands for more than ever before. It stands for the knowledge engineering company ready to serve you with world-class product competences, intellectual resources and the vision to help you succeed.

rgab.ru Берг АБ bergab@ya.ru Тел. (495)-228-06-21, факс (495) 22

rgab.ru Берг АБ bergab@ya.ru Тел. (495)-228-06-21, факс (495) 2

Evolving by-wire technology
SKF has unique expertise and knowledge in fast-growing by-wire technology, from fly-by-wire, to drive-by-wire, to work-by-wire. SKF pioneered practical fly-by-wire technology and is a close working partner with all aerospace industry leaders. As an example, virtually all aircraft of the Airbus design use SKF by-wire systems for cockpit flight control.

SKF is also a leader in automotive drive-by-wire, having jointly developed the revolutionary Filo and Novanta concept cars which employ SKF mechatronics for steering and braking. Further by-wire development has led SKF to produce an all-electric forklift truck which uses mechatronics rather than hydraulics for all controls.

rgab.ru Берг АБ bergab@ya.ru Тел. (495)-228-06-21, факс (495) 2

rgab.ru Берг АБ bergab@ya.ru Тел. (495)-228-06-21, факс (495) 22

Delivering asset efficiency optimization
To optimize efficiency and boost productivity, many industrial facilities outsource some or all of their maintenance services to SKF, often with guaranteed performance contracts. Through the specialized capabilities and knowledge available from SKF Reliability Systems, SKF provides a comprehensive range of asset efficiency services, from maintenance strategies and engineering assistance, to operator-driven reliability and machine maintenance programmes.

Planning for sustainable growth
By their very nature, bearings make a positive contribution to the natural environment. Reduced friction enables machinery to operate more efficiently, consume less power and require less lubrication. SKF is continually raising the performance bar, enabling a new generation of high-efficiency products and equipment. With an eye to the future, SKF's global policies and manufacturing techniques are planned and implemented to help protect and preserve the earth's limited natural resources. We remain committed to sustainable, environmentally responsible growth.

Maintaining a 320 km/h R&D lab
In addition to SKF's renowned research and development facilities in Europe and the United States, Formula One car racing provides a unique environment for SKF to push the limits of bearing technology. For over 50 years, SKF products, engineering and knowledge have helped make Scuderia Ferrari a formidable force in F1 racing. (The average racing Ferrari utilizes more than 150 SKF components.) Lessons learned here are applied to the products we provide to automakers and the aftermarket worldwide.

rgab.ru Берг АБ bergab@ya.ru Тел. (495)-228-06-21, факс (495) 22

rgab.ru Берг АБ bergab@ya.ru Тел. (495)-228-06-21, факс (495) 22

Developing a cleaner cleaner
The electric motor and its bearings are the heart of many household appliances. SKF works closely with appliance manufacturers to improve their product performance, cut costs, reduce weight, etc. A recent example produced a new generation of vacuum cleaners with substantially more suction. SKF's knowledge in small bearing technology is also applied to manufacturers of power tools and office equipment.

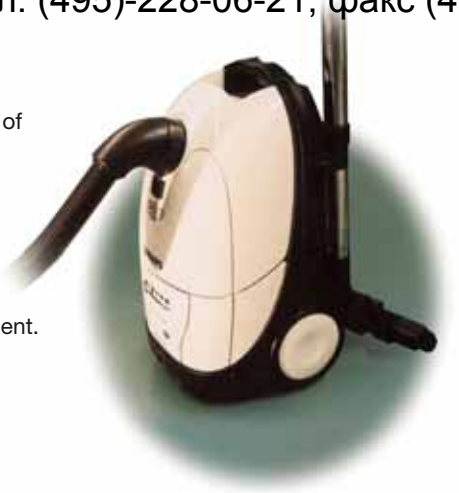

Creating a new "cold remedy"
In the frigid winters of northern China, sub-zero temperatures can cause rail car wheel assemblies and their bearings to seize due to lubrication starvation. SKF created a new family of synthetic lubricants formulated to retain their lubrication viscosity even at these extreme bearing temperatures. SKF's knowledge of lubricants and friction are unmatched in the world.

Harnessing wind power
The growing industry of wind-generated electric power provides an environmentally compatible source of electricity. SKF is working closely with global industry leaders to develop efficient and trouble-free turbines, using SKF knowledge to provide highly specialized bearings and condition monitoring systems to extend equipment life in the extreme and often remote environments of wind farms.

rgab.ru Берг АБ bergab@ya.ru Тел. (495)-228-06-21, факс (495) 22

rgab.ru Берг АБ bergab@ya.ru Тел. (495)-228-06-21, факс (495) 22

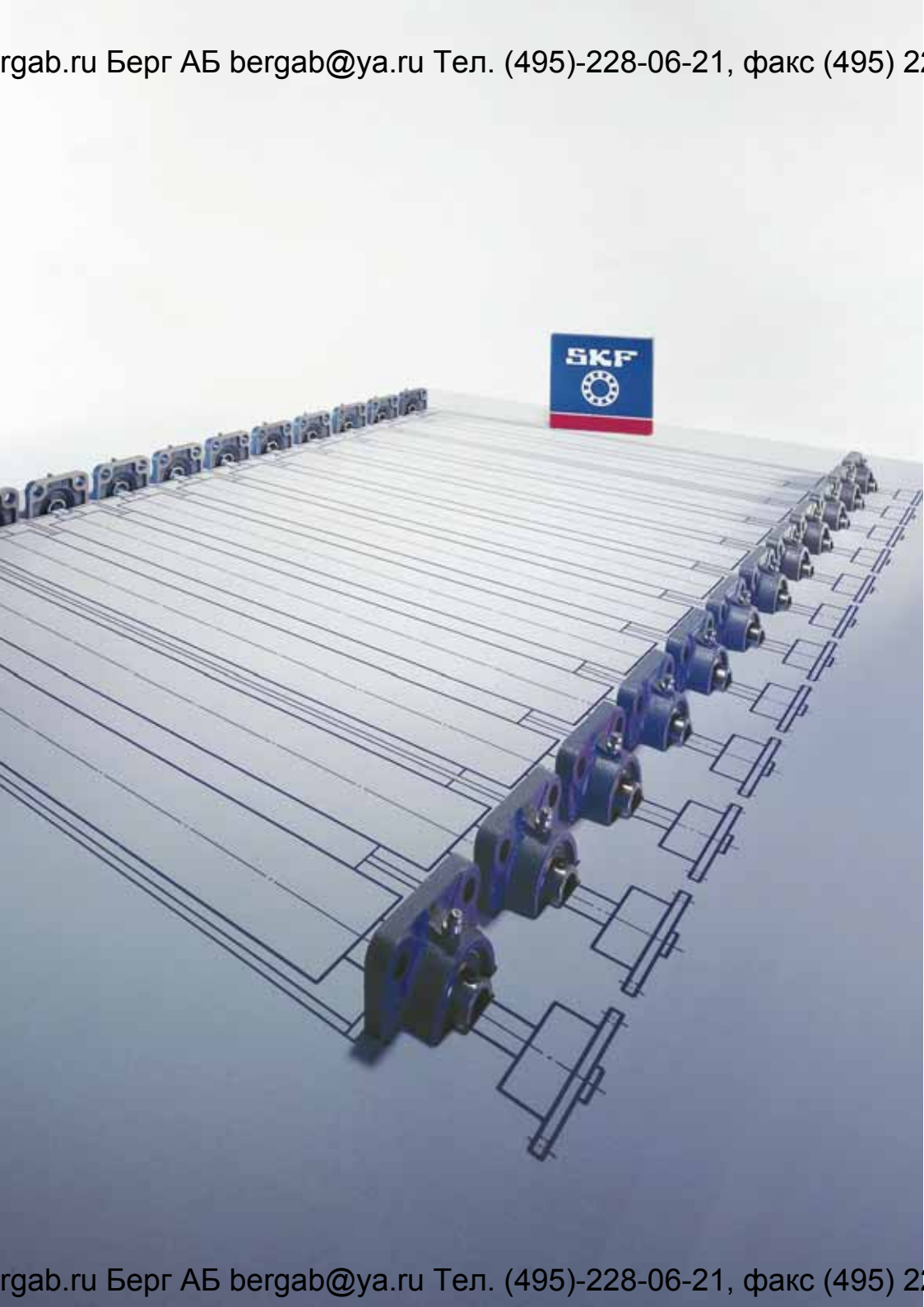

rgab.ru Берг АБ bergab@ya.ru Тел. (495)-228-06-21, факс (495) 22

rgab.ru Берг АБ bergab@ya.ru Тел. (495)-228-06-21, факс (495) 22

Principles of selection and application

2

Designs 12

Selection of Y-bearing unit type 18

Selection of Y-bearing unit size 24

Speeds 32

Design of Y-bearing arrangements 34

Lubrication and maintenance 42

Storing Y-bearings and Y-bearing units 46

Designation systems 47

rgab.ru Берг АБ bergab@ya.ru Тел. (495)-228-06-21, факс (495) 22

rgab.ru Берг АБ bergab@ya.ru Тел. (495)-228-06-21, факс (495) 22

Designs

Conventional SKF ball bearing units are referred to as Y-bearing units. These units consist of

- an insert bearing (a single row deep groove ball bearing) with a convex sphered outside diameter and
- a housing which has a correspondingly sphered but concave bore.

Y-bearing units can accommodate moderate initial misalignment, but normally do not permit axial displacement. They are ready-to-mount, ready-to-use units (➔ **fig 1**) and available as

- Y-bearing plummer block units,
- Y-bearing flanged units and
- Y-bearing take-up units.

The housings are available in the following materials:

- composite material referred to as Y-TECH (➔ **fig 2**),
- grey cast iron (➔ **fig 3**) or
- sheet steel (➔ **fig 4**).

SKF Y-bearing units provide designers with considerable freedom of choice so that compromises can be avoided. Some 40 standard series Y-bearing units are available (➔ matrices on **pages 16** and **17**).

Because of their versatility, and cost effectiveness, Y-bearing units are typically

Fig 1

Fig 2

rgab.ru Берг АБ bergab@ya.ru Тел. (495)-228-06-21, факс (495) 22

rgab.ru Берг АБ bergab@ya.ru Тел. (495)-228-06-21, факс (495) 22

found in the following applications: agricultural machinery, construction equipment, conveyor systems, textile machines and fans as well as in machines for food and beverage processing and packaging.

Bearing terminology

To better understand frequently used bearing specific terms for

- Y-bearings,
- Y-bearing plummer block units,
- Y-bearing flanged units,
- Y-bearing take-up units,

the terms and their definitions are provided on **pages 14** and **15**. Essentially these terms conform to those found in the following ISO standards:

- ISO 3228:1993 “Rolling bearings – Cast and pressed housings for insert bearings”.
- ISO 9628:1992 “Rolling bearings – Insert. bearings and eccentric locking collars”.

A detailed collection of bearing specific terms and definitions can be found in ISO 5593:1997 “Rolling bearings – Vocabulary”.

Fig 3

Fig 4

rgab.ru Берг АБ bergab@ya.ru Тел. (495)-228-06-21, факс (495) 22

rgab.ru Берг АБ bergab@ya.ru Тел. (495)-228-06-21, факс (495) 22

Fig 5

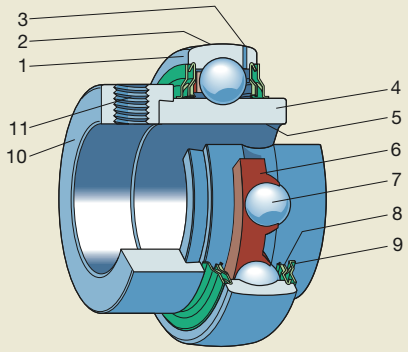

Inner ring with eccentric locking collar

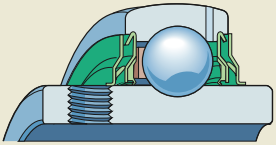

Inner ring with two grub screws

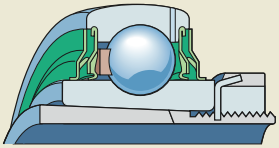

Inner ring with tapered bore
(on adapter sleeve)

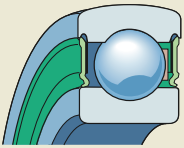

Inner ring of standard deep
groove ball bearing

Y-bearing (→ **fig** 5)

1 Outer ring
2 Sphered outer surface
3 Lubrication hole
4 Inner ring
5 Bore
6 Cage
7 Ball
8 Superagriseal
9 Flinger
10 Eccentric locking collar
11 Grub screw

Y-bearing plummer block unit (→ **fig** 6)

1 Y-bearing plummer (pillow) block housing of grey cast iron
2 Housing base
3 Housing support face
4 Cast dimple for dowel pin
5 Attachment bolt hole
6 Y-bearing (→ **fig** 5)
7 Grease nipple
8 Recess for end cover
9 Filling slot for Y-bearing

Fig 6

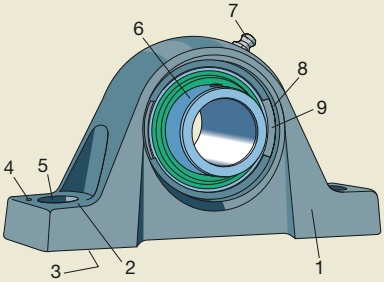

rgab.ru Берг АБ bergab@ya.ru Тел. (495)-228-06-21, факс (495) 22

rgab.ru Берг АБ bergab@ya.ru Тел. (495)-228-06-21, факс (495) 22

Y-bearing flanged unit (➔ **fig** 7)

1 Square flanged housing of grey cast iron
2 Attachment bolt hole
3 Back of flanged housing with or without centring recess
4 Cast dimple for dowel pin
5 Y-bearing (➔ **fig** 5)
6 Grease nipple
7 Filling slot for Y-bearing
8 Recess for end cover

Fig 7

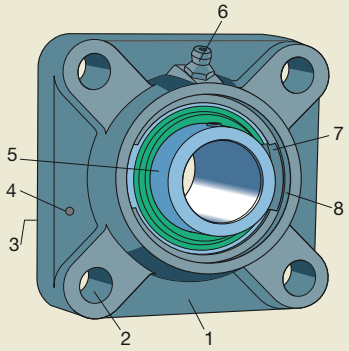

Y-bearing take-up unit (➔ **fig** 8)

1 Take-up housing of grey cast iron
2 Grease nipple
3 Y-bearing (➔ **fig** 5)
4 Piloting groove
5 Recess for end cover
6 Receiving opening for adjustment screw location
7 Centre bore for adjustment screw
8 Filling slot for Y-bearing

Fig 8

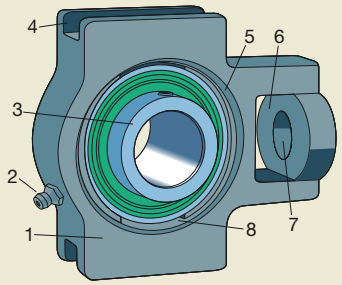

rgab.ru Берг АБ bergab@ya.ru Тел. (495)-228-06-21, факс (495) 22

rgab.ru Берг АБ bergab@ya.ru Тел. (495)-228-06-21, факс (495) 22

Y-bearing unit	Y-bearing housings					
Y-bearings	SYK 5(00) SYKC 5(00) N	SY 5(00) M SYJ 5(00)	SYF 5(00) M SYFJ 5(00)	P 40 – 85	FYK 5(00) FYKC 5(00) N	FYTBK 5(00) FYTBKC 5(00)N
YAR 2-2F	**SYK .. TF**	**SY .. TF** **SYJ .. TF**	**SYF .. TF** **SYFJ .. TF**	Parts must be ordered separately	**FYK .. TF**	**FYTBK .. TF**
	20 – 40 mm	12 – 100 mm	20 – 50 mm	12 – 45 mm	20 – 40 mm	20 – 35 mm
	3/4 – 1 1/2 in	3/4 – 2 1/2 in	3/4 – 1 3/4 in	3/4 – 1 3/4 in	3/4 – 1 1/2 in	3/4 – 1 1/4 in
YAR 2-2RF	**SYK .. TR**	**SY .. TR**	Parts must be ordered separately	Parts must be ordered separately	**FYK .. TR**	**FYTBK .. TR**
	20 – 40 mm	20 – 60 m	20 – 50 mm	20 – 45 mm	20 – 40 mm	20 – 35 mm
	3/4 – 1 1/2 in	3/4 – 2 1/2 in	3/4 – 1 3/4 in	3/4 – 1 3/4 in	3/4 – 1 1/2 in	3/4 – 1 1/4 in
YAR 2-2RF/HV	**SYKC .. NTH**	Parts must be ordered separately	Parts must be ordered separately	Parts must be ordered separately	**FYKC .. NTH**	**FYTBKC .. NTH**
	20 – 40 mm	20 – 40 mm	20 – 40 mm	20 – 40 mm	20 – 40 mm	20 – 35 mm
	3/4 – 1 1/2 in	3/4 – 1 1/2 in	3/4 – 1 1/2 in	3/4 – 1 1/2 in	3/4 – 1 1/2 in	3/4 – 1 1/4 in
YAR 2-2RF/VE495	Parts must be ordered separately					
	20 – 40 mm	20 – 40 mm	20 – 40 mm	20 – 40 mm	20 – 40 mm	20 – 35 mm
YAT 2	Parts must be ordered separately					
	20 – 40 mm	17 – 50 mm	20 – 50 mm	17 – 45 mm	20 – 40 mm	20 – 35 mm
YEL 2-2F	Parts must be ordered separately	**SY .. WF**	Parts must be ordered separately	Parts must be ordered separately	Parts must be ordered separately	Parts must be ordered separately
	20 – 40 mm	20 – 60 mm	20 – 50 mm	20 – 45 mm	20 – 40 mm	20 – 35 mm
YEL 2-2RF/VL065	Parts must be ordered separately					
	20 – 40 mm	20 – 40 mm	20 – 40 mm	20 – 40 mm	20 – 40 mm	20 – 35 mm
YET 2	Parts must be ordered separately	**SY .. FM**	**SYF .. FM**	Parts must be ordered separately	Parts must be ordered separately	Parts must be ordered separately
	20 – 40 mm	15 – 60 mm	20 – 50 mm	15 – 45 mm	20 – 40 mm	20 – 35 mm
	3/4 – 1 1/2 in	3/4 – 1 1/2 in	3/4 – 1 1/2 in	3/4 – 1 1/2 in	3/4 – 1 1/2 in	3/4 – 1 in
YSA 2-2FK on adapter sleeve	Parts must be ordered separately	**SYJ .. KF**	Parts must be ordered separately	Parts must be ordered separately	Parts must be ordered separately	Parts must be ordered separately
	20 – 35 mm	20 – 60 mm	20 – 45 mm	20 – 40 mm	20 – 35 mm	20 – 30 mm
	3/4 – 1 1/4 in	3/4 – 2 3/8 in	3/4 – 1 3/4 in	3/4 – 1 3/4 in	3/4 – 1 1/4 in	3/4 – 1 1/8 in
17262(00)	Parts must be ordered separately					
	20 – 40 mm	20 – 60 mm	20 – 50 mm	17 – 45 mm	20 – 40 mm	20 – 35 mm

rgab.ru Берг АБ bergab@ya.ru Тел. (495)-228-06-21, факс (495) 22

rgab.ru Берг АБ bergab@ya.ru Тел. (495)-228-06-21, факс (495) 22

FY 5(00) M **FYJ 5(00)**	**FYTB 5(00) M** **FYTJ 5(00)**	**FYC 5(00)**	**PF 40 – 90**	**PFD 40 – 80**	**PFT 40 – 80**	**TU 5(00) M** **TUJ 5(00)**
FY .. TF **FYJ .. TF**	**FYTB .. TF** **FYTJ .. TF**	**FYC .. TF**	Parts must be ordered separately	Parts must be ordered separately	Parts must be ordered separately	**TU .. TF** **TUJ .. TF**
12 – 100 mm	12 – 50 mm	20 – 65 mm	12 – 50 mm	12 – 40 mm	12 – 40 mm	20 – 60 mm
3/4 – 2 1/2 in	3/4 – 1 3/4 in	3/4 – 2 1/2 in	3/4 – 1 3/4 in	3/4 – 1 1/2 in	3/4 – 1 1/2 in	1 – 2 in
FY .. TR	**FYTB .. TR**	Parts must be ordered separately	Parts must be ordered separately	Parts must be ordered separately	Parts must be ordered separately	Parts must be ordered separately
20 – 65 mm	20 – 50 mm	20 – 65 mm	20 – 50 mm	20 – 40 mm	20 – 40 mm	20 – 60 mm
3/4 – 2 1/2 in	3/4 – 1 3/4 in	3/4 – 2 1/2 in	3/4 – 1 3/4 in	3/4 – 1 1/2 in	3/4 – 1 1/2 in	3/4 – 2 in
Parts must be ordered separately						
20 – 40 mm	20 – 40 mm	20 – 40 mm	20 – 40 mm	20 – 40 mm	20 – 40 mm	20 – 40 mm
3/4 – 1 1/2 in	3/4 – 1 1/2 in	3/4 – 1 1/2 in	3/4 – 1 1/2 in	3/4 – 1 1/2 in	3/4 – 1 1/2 in	3/4 – 1 1/2 in
Parts must be ordered separately						
20 – 40 mm	20 – 40 mm	20 – 40 mm	20 – 40 mm	20 – 40 mm	20 – 40 mm	20 – 40 mm
Parts must be ordered separately						
17 – 50 mm	17 – 50 mm	20 – 50 mm	17 – 50 mm	17 – 40 mm	17 – 40 mm	20 – 50 mm
FY .. WF	**FYTB .. WF**	Parts must be ordered separately	Parts must be ordered separately	Parts must be ordered separately	Parts must be ordered separately	Parts must be ordered separately
20 – 60 mm	20 – 50 mm	20 – 60 mm	20 – 50 mm	20 – 40 mm	20 – 40 mm	20 – 60 mm
Parts must be ordered separately						
20 – 40 mm	20 – 40 mm	20 – 40 mm	20 – 40 mm	20 – 40 mm	20 – 40 mm	20 – 40 mm
FY .. FM	**FYTB – FM**	Parts must be ordered separately	Parts must be ordered separately	Parts must be ordered separately	Parts must be ordered separately	**TU .. FM**
15 – 60 mm	15 – 50 mm	20 – 60 mm	15 – 50 mm	15 – 40 mm	15 – 40 mm	20 – 55 mm
3/4 – 1 1/2 in	3/4 – 1 1/2 in	3/4 – 1 1/2 in	3/4 – 1 1/2 in	3/4 – 1 1/2 in	3/4 – 1 1/2 in	
FYJ .. KF	**FYTJ .. KF**	Parts must be ordered separately	Parts must be ordered separately	Parts must be ordered separately	Parts must be ordered separately	Parts must be ordered separately
20 – 60 mm	20 – 45 mm	20 – 60 mm	20 – 45 mm	20 – 35 mm	20 – 35 mm	20 – 55 mm
3/4 – 2 3/8 in	3/4 – 1 3/4 in	3/4 – 2 3/8 in	3/4 – 1 3/4 in	3/4 – 1 3/16 in	3/4 – 1 3/16 in	3/4 – 2 1/8 in
Parts must be ordered separately						
17 – 60 mm	20 – 50 mm	20 – 60 mm	17 – 50 mm	17 – 40 mm	17 – 40 mm	20 – 60 mm

rgab.ru Берг АБ bergab@ya.ru Тел. (495)-228-06-21, факс (495) 22

rgab.ru Берг АБ bergab@ya.ru Тел. (495)-228-06-21, факс (495) 22

Selection of Y-bearing unit type

The SKF Y-bearing unit product range is extensive. It includes three designs with housings made from three different materials and a variety of Y-bearings that can be locked onto the shaft in very different ways. Because of their design, each Y-bearing unit exhibits characteristic features that make it more or less suitable for a specific application.

For example, Y-bearing units with a pressed steel housing are not capable of supporting heavy loads, can only run at moderate speeds and can not be relubricated. However, they are economical and easy to mount. On the other hand, housings made of cast iron can withstand significantly heavier radial, axial and shock loads. In addition, cast iron housings have a grease nipple for relubrication, making them an excellent choice for high speed applications.

Since in many cases the selection of a suitable Y-bearing unit must take many factors into consideration, there is no way to provide a list of general rules. The following notes should show, however, what factors are the most important ones to consider first:

- Locating on the shaft
- Loads
- Seals
- Permissible operating temperatures
- Speeds

Keep in mind that the total cost of a bearing arrangement and inventory considerations could also influence the final choice.

Other important criteria for designing a bearing arrangement, such as load carrying capacity and rating life, lubrication, etc., will be dealt with in detail in the corresponding chapters.

rgab.ru Берг АБ bergab@ya.ru Тел. (495)-228-06-21, факс (495) 22

rgab.ru Берг АБ bergab@ya.ru Тел. (495)-228-06-21, факс (495) 22

Fig 1

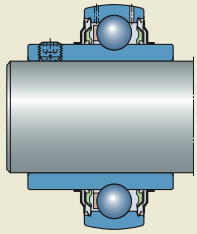

a

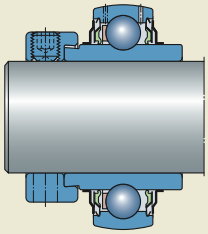

b

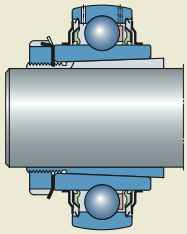

c

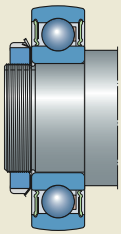

d

Locating on the shaft

There is a choice of four different methods (➔ **fig** 1) by which an SKF Y-bearing unit can be located onto the shaft:

- Grub (set) screws (**a**). This method enables very easy mounting and dismounting, even if space is limited. This locking method is typically used in applications where the shaft alternates direction of rotation.
- Eccentric locking collar (**b**). This locking method should be chosen for applications where the shaft rotates in one direction only.
- Adapter sleeve locking (**c**). This method enables a concentric locking of the Y-bearing unit on the shaft and is appropriate for alternating as well as constant directions of rotation.
- Interference fit (**d**). The use of an interference fit is only available for Y-bearings in the 17262(00)-2RS1 and 17263(00)-2RS1 series. These bearings and the required housings have to be ordered separately.

rgab.ru Берг АБ bergab@ya.ru Тел. (495)-228-06-21, факс (495) 22

rgab.ru Берг АБ bergab@ya.ru Тел. (495)-228-06-21, факс (495) 22

Loads

The magnitude of the load is the factor that usually determines the size of the Y-bearing unit to be used. Generally, units with housings made from cast iron or composite material can withstand heavier loads than units with pressed sheet steel housings.

Radial loads
In applications where moderate and heavy loads occur, only Y-bearing units with housings made from cast iron or composite material should be used. These units are able to withstand the same dynamic and static loads as their insert bearings and are less sensitive to shock loads (➔ **fig** 2a).

Y-bearing units with a pressed steel housing are designed to withstand light to moderate loads and are not able to accommodate shock loads (➔ **fig** 2b).

Axial loads
The axial load carrying capacity of a Y-bearing depends not as much on its internal design as on the way it is locked onto the shaft (➔ **fig** 2c); ➔ chapter "Axial load carrying ability", **page 28**. In general, Y-bearing units with housings made from cast iron or composite material are more suitable for heavier or alternating axial loads.

Y-bearing units with a pressed sheet steel housing are only intended for moderate axial loads, in particular the plummer block units incorporating a rubber seating ring (➔ **fig** 2d).

Fig 2

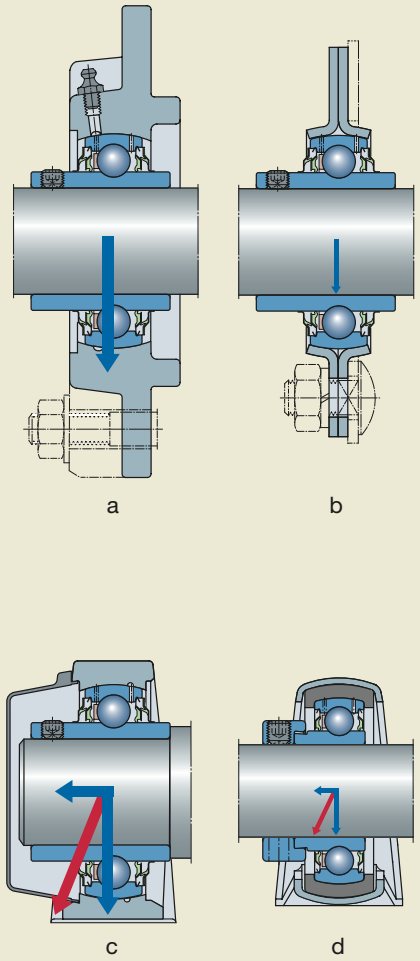

rgab.ru Берг АБ bergab@ya.ru Тел. (495)-228-06-21, факс (495) 22

rgab.ru Берг АБ bergab@ya.ru Тел. (495)-228-06-21, факс (495) 22

Fig 3

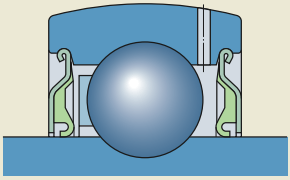

a

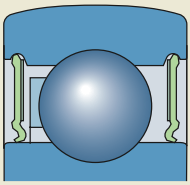

b

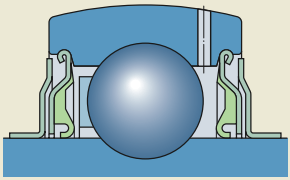

c

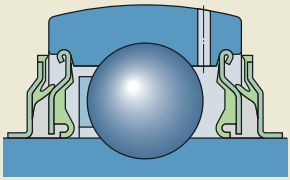

d

Seals

The factors that influence the choice of the most appropriate seal include:

- The peripheral speed at the sealing counterface.
- The friction in the seal and the resulting temperature increase.
- The operating environment, e.g. moisture, dust or coarse contaminants.
- The requirements regarding efficiency.

The standard “Superagriseal” used in SKF Y-bearing units provides good protection against moisture and contaminants and also provides reliable retention of the lubricant (➔ **fig** 3a). The same applies to RS1 contact seals that are built into the Y-bearings with normal inner ring, series 17262(00)-2RS1 and 17263(00)-2RS1 (➔ **fig** 3b).

For more contaminated conditions Y-bearing units fitted with plain steel flingers outside the integral “Superagriseal” should be used (➔ **fig** 3c). The flingers have an interference fit on the inner ring and considerably enhance the sealing effect without increasing friction.

Where operating conditions are extremely contaminated and long service life is required, Y-bearing units with the highly efficient multiple seal are recommended. Here, the sealing efficiency of the standard “Superagriseal” is reinforced with a steel flinger having a vulcanized sealing lip (➔ **fig** 3d).

rgab.ru Берг АБ bergab@ya.ru Тел. (495)-228-06-21, факс (495) 22

rgab.ru Берг АБ bergab@ya.ru Тел. (495)-228-06-21, факс (495) 22

Permissible operating temperatures

The permissible operating temperatures for a Y-bearing unit are determined primarily by the bearing, the cage material, the seal material(s) and the grease with which it is lubricated.

The permissible operating temperatures range from:

- –20 to +120 °C for all standard Y-bearings and Y-bearing units that are filled with a lithium-calcium-soap grease.
- –45 to +120 °C for HV and VE495 Y-bearing variants and for NTH unit variants that are filled with a food grade grease.
- +40 to +55 °C for maintenance-free operation at moderate loads (C/P > 15) and speeds.

If Y-bearing units are required to operate above the reference temperature of the grease (➔ **table 1**, **page 43**), SKF recommends using Y-bearing units that can be relubricated. Relubrication should be frequent (➔ section “Relubrication intervals”, **pages 44** and **45**).

For operating temperatures exceeding the limits listed above, Y-bearing units for high temperatures are available from SKF. Detailed information on these units can be found in the SKF General Catalogue or in the “SKF Interactive Engineering Catalogue” on CD-ROM or online at www.skf.com.

rgab.ru Берг АБ bergab@ya.ru Тел. (495)-228-06-21, факс (495) 22

rgab.ru Берг АБ bergab@ya.ru Тел. (495)-228-06-21, факс (495) 22

Speeds

The speed at which a Y-bearing can operate depends on

- the means by which it is attached to the shaft and
- the sealing arrangement.

For Y-bearings that are locked onto a shaft with grub screws or an eccentric locking collar, the permissible speed of the bearing is determined by its fit on the shaft. The looser the fit, the lower the speed.

If a Y-bearing is mounted on an adapter sleeve or mounted with an interference fit, e.g. bearings in the 17262(00)-2RS1 and 17263(00)-2RS1 series, the permissible speed is much higher than if another locating method is used. Their concentric fit also provides low vibration and quiet running.

Because of the relubrication requirements of high-speed applications (➔ chapter "Lubrication and maintenance", starting on **page 42**), SKF recommends using Y-bearing units that can be relubricated.

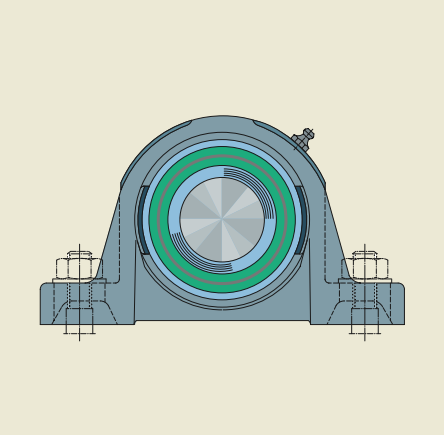

Application note

Because of their special properties, SKF Y-bearing units are used in applications in virtually every industry. If however, they are to be used in an application where health, safety, or the environment is at risk, the SKF application engineering service should be contacted during the design phase.

This is also valid for applications where a stop can cause severe problems.

rgab.ru Берг АБ bergab@ya.ru Тел. (495)-228-06-21, факс (495) 22

rgab.ru Берг АБ bergab@ya.ru Тел. (495)-228-06-21, факс (495) 22

Selection of Y-bearing unit size

Load carrying ability and life

The size of a Y-bearing or Y-bearing unit required for a specific arrangement is determined by the loads that will occur in the application and the required life needed for the application. Variables known as load ratings are used in bearing calculations as a measure of the load carrying ability: the basic dynamic load rating C and the basic static load rating C_0. The basic dynamic load rating is based on specifications determined in ISO 281:1990 and ISO 281:1990Amd.1:2000 while the basic static load rating is based on specifications determined in ISO 76:1987.

Selecting the bearing size using the life equations

To select a Y-bearing or a Y-bearing unit size, the basic rating life is typically calculated according to ISO 281:1990. The equation for ball bearings is:

$$L_{10} = \left(\frac{C}{P}\right)^3$$

If speed is constant, the basic rating life expressed in operating hours can be obtained using

$$L_{10h} = \frac{1\,000\,000}{60\,n}\left(\frac{C}{P}\right)^3$$

or

$$L_{10h} = \frac{1\,000\,000}{60\,n}\,L_{10}$$

rgab.ru Берг АБ bergab@ya.ru Тел. (495)-228-06-21, факс (495) 22

rgab.ru Берг АБ bergab@ya.ru Тел. (495)-228-06-21, факс (495) 22

where
L_{10} = basic rating life (at 90 % reliability), millions of revolutions
L_{10h} = basic rating life (at 90 % reliability), operating hours
C = basic dynamic load rating, kN
P = equivalent dynamic bearing load, kN
n = rotational speed, r/min

This method is usually adequate for selecting the size of Y-bearings or Y-bearing units as it is based on experience. If reference cases with regard to requisite life and operational reliability are lacking, the values given in **table 1** for the basic rating life L_{10h} can be used as guidelines.

To fully exploit the service life of a Y-bearing or a Y bearing unit, the modified life equation according to ISO 281:1990 Amd.2:2000 should be used to calculate the SKF rating life.

SKF rating life
In the SKF rating life equation, the stresses resulting from external loads are considered, together with the stresses caused by the surface topography, lubrication and kinematics of the rolling contact surfaces. Taking the influence of this combined stress system into account provides a better prediction of the actual performance of the Y-bearing or Y-bearing unit in a particular application.

Additional information about the SKF rating life and its calculation can be found in the

- SKF General Catalogue or
- SKF Interactive Engineering Catalogue on CD-ROM or online at www.skf.com.

The SKF Interactive Engineering Catalogue provides the possibility to perform online calculations of the different bearing lifes described here.

Table 1

Guideline values of requisite basic rating life L_{10h} for Y-bearings and Y-bearing units

Type of machine	Requisite basic rating life L_{10h} operating hours
Machines used for short periods or intermittently	
Agricultural and ancillary transport equipment	1 000 to 2 000
Other agricultural equipment	4 000 to 8 000
Machines used 8 hours per day but not always fully utilized	
Belt conveyors	12 000 to 20 000
Machines used 8 hours per day and fully utilized	
Light duty fans, textile machinery	20 000 to 30 000

rgab.ru Берг АБ bergab@ya.ru Тел. (495)-228-06-21, факс (495) 22

rgab.ru Берг АБ bergab@ya.ru Тел. (495)-228-06-21, факс (495) 22

Equivalent dynamic bearing load

The equivalent dynamic bearing load is defined as that hypothetical radial load, constant in magnitude and direction, which, if applied, would have the same influence on bearing life as the actual load to which the bearing is subjected (→ **fig 1**).

If the bearing load F is constant in magnitude and direction and acts radially, then P = F and the load can be inserted directly into the life equation. In all other cases the equivalent dynamic bearing load must be calculated.

Fig 1

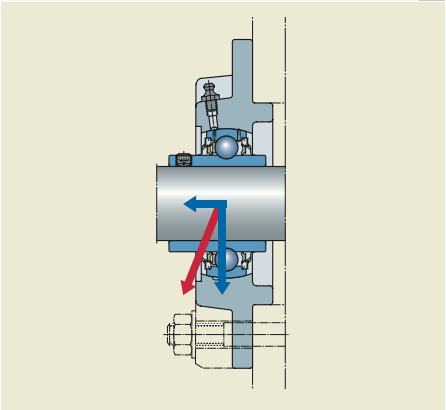

Constant bearing load

Y-bearings and Y-bearing units are often subjected to simultaneously acting radial and axial loads. If the resultant load is constant in magnitude and direction, the equivalent dynamic bearing load P can be obtained from the general equations

$P = F_r$ when $F_a/F_r \leq e$

$P = XF_r + YF_a$ when $F_a/F_r > e$

where

P = equivalent dynamic bearing load, kN
F_r = actual radial bearing load, kN
F_a = actual axial bearing load, kN
C_0 = static bearing load, kN
f_0 = a bearing-dependent calculation factor (→ **table 3**)
X = radial load factor for the bearing
Y = axial load factor for the bearing
e = limiting value for F_a/F_r

The limiting value e and the load factors X and Y required to calculate the equivalent bearing load for Y-bearings and Y-bearing units can be found in **table 2**. As for deep groove ball bearings, it depends on the relationship $f_0 F_a/C_0$.

Table 2

Calculation factors

Thrust load	Y-bearing series YAT, YAR, YET, YEL, YSA			17262(00), 17263(00)		
$f_0 F_a/C_0$	e	X	Y	e	X	Y
0,172	0,29	0,46	1,88	0,19	0,56	2,30
0,345	0,32	0,46	1,71	0,22	0,56	1,99
0,689	0,36	0,46	1,52	0,26	0,56	1,71
1,03	0,38	0,46	1,41	0,28	0,56	1,55
1,38	0,40	0,46	1,34	0,30	0,56	1,45
2,07	0,44	0,46	1,23	0,34	0,56	1,31
3,45	0,49	0,46	1,10	0,38	0,56	1,15
5,17	0,54	0,46	1,01	0,42	0,56	1,04
6,89	0,54	0,46	1,00	0,44	0,56	1,00

Table 3

Calculation factor f_0

Y-bearing series (sizes)	Factor f_0
YET 2, YEL 2, YAT 2, YAR 2, YSA 2 K, 17262(00)-2RS1	
03, 04	13
05 – 12	14
13 – 18	15
20	14
17263(00)-2RS1	
05	12
06 – 10	13

rgab.ru Берг АБ bergab@ya.ru Тел. (495)-228-06-21, факс (495) 22

rgab.ru Берг АБ bergab@ya.ru Тел. (495)-228-06-21, факс (495) 22

Diagram 1

Load averaging

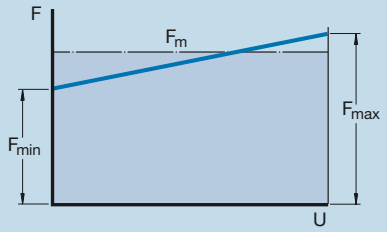

Diagram 2

Rotating load

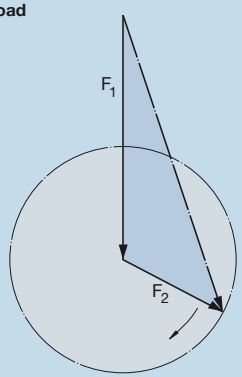

Diagram 3

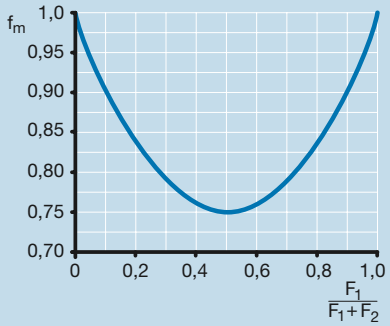

Fluctuating bearing load
In applications where the load varies over time, both in magnitude and direction, bearing life cannot be calculated without first calculating the equivalent load related to the variable (or fluctating) load conditions. To do this see the section "Life calculation with variable operating conditions" in the SKF General Catalogue.

Mean load within a duty interval
Within each loading interval the operating conditions can vary slightly from the nominal value. Assuming that the operating conditions e.g. speed and load direction are fairly constant and the magnitude of the load constantly varies between a minimum value F_{min} and a maximum value F_{max} (→ **diagram 1**), the mean load can be obtained from

$$F_m = \frac{F_{min} + 2\,F_{max}}{3}$$

Rotating load
If, as illustrated in **diagram 2**, the load on the bearing consists of a load F_1 which is constant in magnitude and direction (e.g. the weight of a rotor) and a rotating constant load F_2 (e.g. an unbalance load), the mean load can be obtained from

$$F_m = f_m\,(F_1 + F_2)$$

Values for the factor f_m can be obtained from **diagram 3**.

2

rgab.ru Берг АБ bergab@ya.ru Тел. (495)-228-06-21, факс (495) 22

rgab.ru Берг АБ bergab@ya.ru Тел. (495)-228-06-21, факс (495) 22

Dynamic bearing loads

When determining additional, external dynamic forces e.g. an unbalanced condition, it might be necessary to rely on estimates based on experience gained with similar machines or bearing arrangements.

In belt driven applications, the effective belt pull (circumferential force), which is dependent on the transmitted torque, must be taken into account. To do this, the belt pull must be multiplied by a factor that is dependent on the type of belt, its preload, tension and any additional dynamic forces. Values are usually published by belt manufacturers. However, should information not be available, the following values can be applied:

- Toothed belts 1,1 to 1,3
- V-belts 1,2 to 2,5
- Flat belts 1,5 to 4,5

The larger values apply when the arc of contact is small, for heavy or shock-type duty, or where belt tension is high.

Requisite minimum load

If Y-bearings or Y-bearing units are to operate satisfactorily they must always be subjected to a minimum radial load. A general rule of thumb indicates that this load should correspond to 0,01 C.

The importance of imposing this load increases where accelerations in the bearing are high, and where speeds are in the region of 75 %, or more, of the speed ratings quoted in the product tables.

The weight of the components supported by the Y-bearing, together with external forces, normally exceed the requisite minimum load.

Fig 2

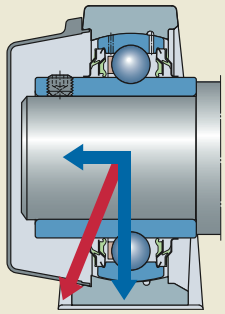

Axial load carrying ability

The axial load carrying ability of a Y-bearing or Y-bearing unit depends not so much on its internal design as on the way it is locked onto the shaft.

For Y-bearings and Y-bearing units with grub screws or an eccentric locking collar, the maximum axial load that they can support is approximately 20 % of the basic dynamic load rating if an unhardened shaft is used and the grub screws are properly tightened.

When a Y-bearing is mounted on an adapter sleeve, its axial load carrying ability depends on the amount of torque used to tighten the locknut. If the torque prescribed in **table** 2 on **page 173**, is used, the axial load carrying ability will be between 15 and 20 % of the basic dynamic load rating.

Where the inner rings are supported by an abutment on the shaft (→ **fig** 2), the axial load carrying ability depends on the nature of this abutment. Generally, however, the axial load on the bearing should not exceed 0,25 C_0.

Additional information about the axial load carrying ability of Y-bearing units is provided in the appropriate chapters.

rgab.ru Берг АБ bergab@ya.ru Тел. (495)-228-06-21, факс (495) 22

rgab.ru Берг АБ bergab@ya.ru Тел. (495)-228-06-21, факс (495) 22

Selecting the bearing size using the static load carrying capacity

A Y-bearing or Y-bearing unit size should be determined on the basis of the static load rating C_0, instead of bearing life, when one of the following conditions exists:

- The bearing is stationary and subjected to continuous or intermittent (shock) loads.
- The bearing makes slow oscillating or alignment movements under load.
- The bearing rotates under load at a very slow speed ($n < 10$ r/min) and is not required to have a long service life. The life equation in this case for a given equivalent load P would give such a low requisite basic dynamic load rating C that the bearing selected on a life basis would be seriously overloaded in service.
- The bearing rotates and, in addition to the normal operating loads, has to sustain heavy shock loads that act during a fraction of a revolution.

In all these cases, the permissible load for a Y-bearing is determined by the load that will cause permanent deformations to the ball/raceway contacts and is not determined by material fatigue. Heavy loads acting on a stationary or slowly oscillating bearing, or shock loads on a rotating bearing, produce flattened areas on the balls and indentations on the raceways. The indentations may be irregularly spaced around the raceway, or may be evenly spaced at positions corresponding to the spacing of the balls. If the load acts for several revolutions the deformation will be evenly distributed over the whole raceway.

The extent to which this damage is detrimental to bearing performance depends on the application and the demands placed on the bearing. To prevent or minimize this type of damage, bearings with a sufficiently high static load carrying capacity should be selected.

When determining the bearing size based on static load carrying capacity, a given safety factor s_0, which represents the relationship between the basic static load rating C_0 and the equivalent static bearing load P_0, is used to calculate the requisite basic static load rating.

rgab.ru Берг АБ bergab@ya.ru Тел. (495)-228-06-21, факс (495) 22

rgab.ru Берг АБ bergab@ya.ru Тел. (495)-228-06-21, факс (495) 22

Equivalent static bearing load
An equivalent static bearing load is defined as that load, which if applied, would cause the same permanent deformations in the bearing as the actual combined (axial and radial) loads (➔ **fig** 3). The equivalent static bearing load for Y-bearings and Y-bearing units is obtained from the general equation

$$P_0 = 0{,}6\ F_r + 0{,}5\ F_a$$

where
P_0 = equivalent static bearing load, kN
F_r = actual radial bearing load, kN
F_a = actual axial bearing load, kN

If $P_0 < F_r$, calculate with $P_0 = F_r$.

Note:
When calculating P_0, the maximum load that can occur should be used and its radial and axial components (➔ **fig** 3) inserted in the equation above. If a static load acts in different directions on a bearing, the magnitude of these components will change. In these cases, the components of the load giving the largest value of the equivalent static bearing load P_0 should be used.

Requisite static load rating
The requisite basic static load rating C_0 can be determined from

$$C_0 = s_0\ P_0$$

where
C_0 = basic static load rating, kN
P_0 = equivalent static bearing load, kN
s_0 = static safety factor

Experience based guideline values of the static safety factor s_0 for Y-bearings and Y-bearing units are provided in **table** 4.

Fig 3

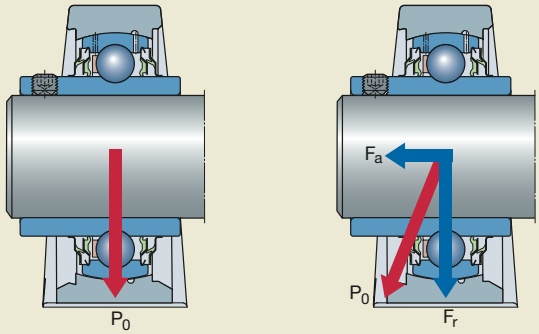

rgab.ru Берг АБ bergab@ya.ru Тел. (495)-228-06-21, факс (495) 22

rgab.ru Берг АБ bergab@ya.ru Тел. (495)-228-06-21, факс (495) 22

Checking the static load carrying capacity
For dynamically loaded bearings that have been selected based on requisite life, it is advisable, where the equivalent static bearing load P_0 is known, to check that the static load carrying capacity is adequate using

$$s_0 = C_0/P_0$$

If the s_0 value obtained is less than the recommended guideline value (→ **table 4**) then a larger Y-bearing or Y-bearing unit should be selected.

Table 4

Guideline values for static safety factor s_0

Type of operation	Required static safety factor s_0
Normal loads and smooth, vibration-free operation, where noise levels are not specified, and speeds are very low	≥ 0,5
Normal loads and smooth, vibration-free operation, where noise levels are normal	≥ 1
Normal loads and high degree of running accuracy, where low noise levels are specified	≥ 2
Pronounced shock loads, very slow or non-rotating bearings	≥ 2

rgab.ru Берг АБ bergab@ya.ru Тел. (495)-228-06-21, факс (495) 22

rgab.ru Берг АБ bergab@ya.ru Тел. (495)-228-06-21, факс (495) 22

Speeds

The speed at which a Y-bearing or Y-bearing unit can operate depends on the type of seal that is used and the method used to lock the bearing onto the shaft. In applications where Y-bearings with

- grub screws,
  series YAT 2 and YAR 2-2F or
- an eccentric locking collar,
  series YET 2 and YEL 2-2F

are used, the permissible operating speeds also depend on the shaft tolerance. The higher the figure following the tolerance symbol h, the lower the permissible speed. Guideline values for the limiting speeds are provided in **table** 1.

For bearings with rubberized flingers (2RF design) the limiting speed is some 60 % of the value quoted in table 1 for bearings mounted on an h6 tolerance shaft. For Y-bearings with a

- tapered bore on an adapter sleeve, series YSA 2-2FK + H 23, or
- standard inner ring, series 17262(00)-2RS1 and 17263(00)-2RS1

the limiting speed depends on the seals. The values for the limiting speed are provided in the product tables and in **table** 1 to enable easy comparison.

The limiting speeds for Y-bearings and Y-bearing units for inch shafts are the same as those for the same basic metric bearing.

rgab.ru Берг АБ bergab@ya.ru Тел. (495)-228-06-21, факс (495) 22

rgab.ru Берг АБ bergab@ya.ru Тел. (495)-228-06-21, факс (495) 22

Limiting speeds for Y-bearings

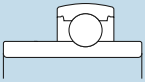

YAT, YAR

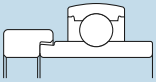

YET, YEL

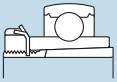

YSA + H 23

1726...

Shaft diameter	Limiting speed for Y-bearings of series YAT 2, YAR 2, YET 2, YEL 2 for shafts machined to tolerance					YSA 2 K + H 23	17262(00)	17263(00)
d	h6	h7	h8	h9	h11			
mm	r/min							
12	9 500	6 000	4 300	1 500	950	–	–	–
15	9 500	6 000	4 300	1 500	950	–	13 000	–
17	9 500	6 000	4 300	1 500	950	–	12 000	–
20	8 500	5 300	3 800	1 300	850	7 000	10 000	–
25	7 000	4 500	3 200	1 000	700	6 300	8 500	7 500
30	6 300	4 000	2 800	900	630	5 300	7 500	6 300
35	5 300	3 400	2 200	750	530	4 800	6 300	6 000
40	4 800	3 000	1 900	670	480	4 300	5 600	5 000
45	4 300	2 600	1 700	600	430	4 000	5 000	4 500
50	4 000	2 400	1 600	560	400	3 600	4 800	4 300
55	3 600	2 000	1 400	500	360	3 400	4 300	–
60	3 400	1 900	1 300	480	340	3 000	4 000	–
65	3 000	1 700	1 100	430	300	–	–	–
70	2 800	1 600	1 000	400	280	–	–	–
75	2 600	1 500	950	380	260	–	–	–
80	2 400	1 400	900	360	240	–	–	–
85	2 200	1 300	850	340	220	–	–	–
90	2 000	1 200	800	320	200	–	–	–
100	1 900	1 100	750	300	190	–	–	–

rgab.ru Берг АБ bergab@ya.ru Тел. (495)-228-06-21, факс (495) 22

rgab.ru Берг АБ bergab@ya.ru Тел. (495)-228-06-21, факс (495) 22

Design of Y-bearing arrangements

Axial displacement

Y-bearing units do not accommodate axial displacement of the shaft and are therefore not normally suitable for non-locating bearing arrangements. The distance between bearing positions should therefore be short or the units should be supported in resilient sheet metal walls in order to prevent any tendency to overload the bearings (➔ **fig 1**).

In applications where there are low speeds, light loads, and the distance between the bearing positions is too long or the operating temperatures too high and one bearing position has to accommodate thermal elongation of the shaft, the following arrangement is recommended.

The shaft on the non-locating side should be provided with one or two grooves 120° apart to engage

- grub screws with a finger, e.g. to ISO 4028:1977, secured by a nut and spring washer or fan-shaped washer (➔ **fig 2**) or
- flat head screws to ISO 1580:1994 that are locked with spring or fan shaped washers (➔ **fig 3**); the flat head screws must be equipped with a finger.

The finger(s) and groove(s) enable changes in shaft length and prevent relative rotational movements between the shaft and bearing bore. To provide trouble-free operation, the ends of the grub screws should be ground

Fig 1

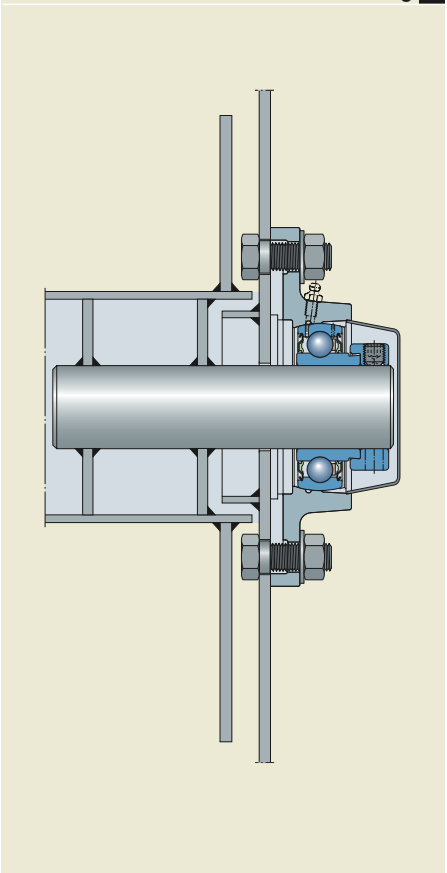

rgab.ru Берг АБ bergab@ya.ru Тел. (495)-228-06-21, факс (495) 22

rgab.ru Берг АБ bergab@ya.ru Тел. (495)-228-06-21, факс (495) 22

and the sliding surfaces in the shaft grooves coated with a lubricant paste. Thread sizes are provided in **table 1**.

Fig 2

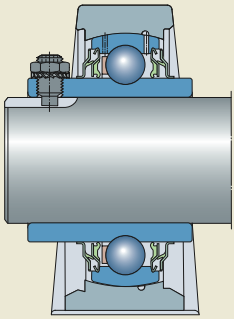

Fig 3

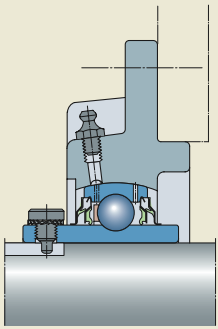

Table 1

Threads in the inner rings of YAR and YAT bearings

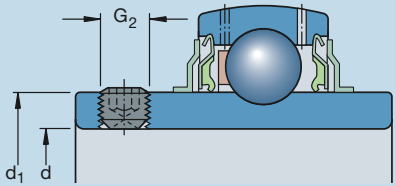

Y-bearing designation	Dimensions d	d_1	G_2
–	mm		–
YAR 203/12-2F/-2RF	12	24,2	M 6 × 0,75
YAR 203/15-2F/-2RF	15	24,2	M 6 × 0,75
YAR 203-2F/-2RF	17	24,2	M 6 × 0,75
YAR 204-2F/-2RF	20	28,2	M 6 × 0,75
YAR 204-012-2F/-2RF	19,050	28,2	UNF-1/4
YAR 205-2F/-2RF	25	33,7	M 6 × 0,75
YAR 205-100-2F/-2RF	25,400	33,7	UNF-1/4
YAR 206-2F/-2RF	30	39,7	M 6 × 0,75
YAR 207-2F/-2RF	35	46,1	M 6 × 0,75
YAR 207-104-2F/-2RF	31,750	46,1	UNF-5/16
YAR 208-2F/-2RF	40	51,8	M 8 × 1
YAR 208-108-2F/-2RF	38,100	51,8	UNF-5/16
YAR 209-2F/-2RF	45	56,8	M 8 × 1
YAR 209-112-2F/-2RF	44,450	56,8	UNF-5/16
YAR 210-2F/-2RF	50	62,5	M 10 × 1
YAR 211-2F/-2RF	55	69,1	M 10 × 1
YAR 211-200-2F/-2RF	50,800	69,1	UNF-3/8
YAR 212-2F/-2RF	60	75,6	M 10 × 1
YAR 213-2F/-2RF	65	82,5	M 10 × 1
YAR 213-208-2F/-2RF	63,500	82,5	UNF-3/8
YAR 214-2F	70	87	M 12 × 1,5
YAR 215-2F	75	92	M 12 × 1,5
YAR 216-2F	80	97	M 12 × 1,5
YAR 217-2F	85	105	M 12 × 1,5
YAR 218-2F	90	112	M 12 × 1,5
YAR 220-2F	100	122	M 12 × 1,5
YAT 203	17	24,2	M 6 × 0,75
YAT 204	20	28,2	M 6 × 0,75
YAT 205	25	33,7	M 6 × 0,75
YAT 206	30	39,7	M 6 × 0,75
YAT 207	35	46,1	M 6 × 0,75
YAT 208	40	51,8	M 6 × 0,75
YAT 209	45	56,8	M 6 × 0,75
YAT 210	50	62,5	M 8 × 1

rgab.ru Берг АБ bergab@ya.ru Тел. (495)-228-06-21, факс (495) 22

rgab.ru Берг АБ bergab@ya.ru Тел. (495)-228-06-21, факс (495) 22

Initial misalignment

Y-bearing units can compensate for initial misalignment (➔ **fig** 4) of up to:

- 5° when relubrication is not needed and
- 2° when relubrication is necessary.

Additionally operational shaft deflections of up to 3 angular minutes can be permitted.

Y-bearing units with pressed steel housings cannot compensate for misalignment once the attachment bolts have been fully tightened, unless they are equipped with a rubber seating ring.

Fig 4

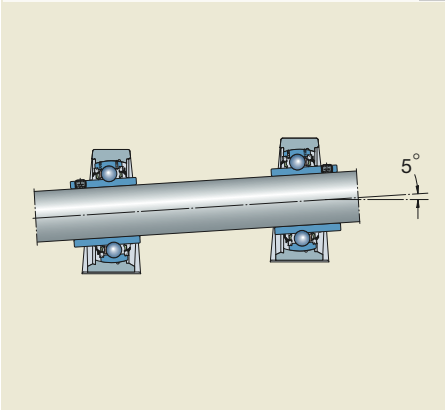

Support surfaces

To realize the full service life of Y-bearing units, the support surfaces must be manufactured with

- a roughness of $R_a \leq 12{,}5$ µm and
- a flatness (planicity) tolerance to IT7 or IT8.

When a heavy load, parallel to the flange, acts on a Y-bearing unit, (➔ **fig** 5) SKF recommends doweling the housing to the support surface. The position and size of the holes for the dowel pins are listed in the introductory text preceeding the relevant product tables.

To mount Y-bearing housings, SKF recommends using hexagonal head cap screws to ISO 4762:1997 with washers because this combination provides improved seating on the support surface (➔ **fig** 2, **page 170**).

Fig 5

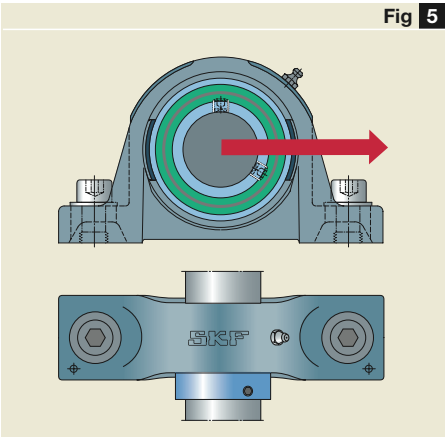

Fig 6

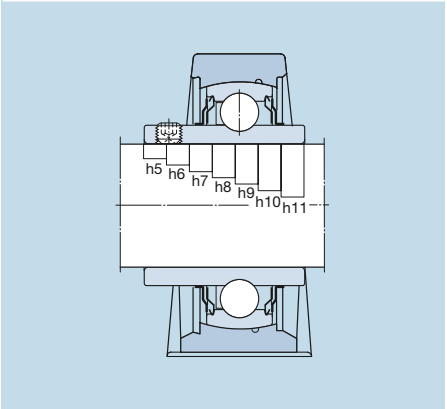

rgab.ru Берг АБ bergab@ya.ru Тел. (495)-228-06-21, факс (495) 22

rgab.ru Берг АБ bergab@ya.ru Тел. (495)-228-06-21, факс (495) 22

Shaft tolerances

Under normal operating conditions the shaft seats for Y-bearings with grub screws or an eccentric locking collar should be machined to an h7 tolerance.

For light loads and low speeds an h8 shaft tolerance is sufficient and for very simple applications shaft tolerances from h9 to h11 may be used, as recommended in **table** 2.

For Y-bearings on an adapter sleeve, a shaft seat machined to h9/IT5 is adequate.

For Y-bearings with a standard inner ring the same recommendations apply as for standard deep groove ball bearings, e.g. tolerance j6 for light loads.

The location of the most commonly used ISO tolerance grades relative to the bearing bore are illustrated in **fig** 6. The values of these ISO tolerances are provided in **table** 3.

Table 2

Recommended fits

Operating conditions	Tolerance
Y-bearings with grub screws or an eccentric locking collar	
Heavy loads (P ≥ 0,06 C) and/or high speeds	h6
Normal loads (P < 0,06 C)	h7
Light loads (P < 0,035 C) and/or low speeds	h8
Simple bearing arrangements and very light loads (P < 0,02 C)	h9 – h11
Y-bearings with a tapered bore on an adapter sleeve	
All loads and speeds	h9/IT5
Y-bearings with a standard inner ring	
Normal and heavy loads (P ≥ 0,035 C)	
Shaft diameter ≤ 17 mm	j5
Shaft diameter ≥ 20 mm	k5
Light loads (P < 0,035 C)	
Shaft diameter ≥ 20 mm	j6

Table 3

ISO tolerances

Shaft diameter d		Deviations of shaft diameter													
		h11		h10		h9		h8		h7		h6		j6	
		Deviation													
over	incl.	high	low	high	low	high	low	high	low	high	low	high	low	high	low
mm		µm													
10	**18**	0	–110	0	–70	0	–43	0	–27	0	–18	0	–11	+8	–3
18	**30**	0	–130	0	–84	0	–52	0	–33	0	–21	0	–13	+9	–4
30	**50**	0	–160	0	–100	0	–62	0	–39	0	–25	0	–16	+11	–5
50	**80**	0	–190	0	–120	0	–74	0	–46	0	–30	0	–19	+12	–7
80	**120**	0	–220	0	–140	0	–87	0	–54	0	–35	0	–22	+13	–9

rgab.ru Берг АБ bergab@ya.ru Тел. (495)-228-06-21, факс (495) 22

rgab.ru Берг АБ bergab@ya.ru Тел. (495)-228-06-21, факс (495) 22

Rubber seating rings

Rubber seating rings in the RIS 2 series (➔ **fig** 7) are primarily intended to "cushion" Y-bearings in pressed steel plummer block housings. Located between the bearing outer ring and housing bore they dampen vibrations and noise (➔ **fig** 8) and enable the bearings to be displaced slightly in their housings to accommodate small shaft elongation or misalignment.

For some applications rubber seating rings may be fitted to the Y-bearing outer rings to serve as tyres, to run quietly and protect the counter surfaces (➔ **fig** 9).

The seating rings in the RIS 2 series

- are made from nitrile-butadiene-rubber (NBR),
- have a convex sphered outside diameter,
- can operate at temperatures from –30 to +110 °C.

The product tables for Y-bearing units with a pressed steel plummer block housing are listed with their individual components, e.g. housing, Y-bearing and rubber seating ring.

The designation and the dimensions of rubber seating rings are shown in **table** 4.

Fig 7

Fig 8

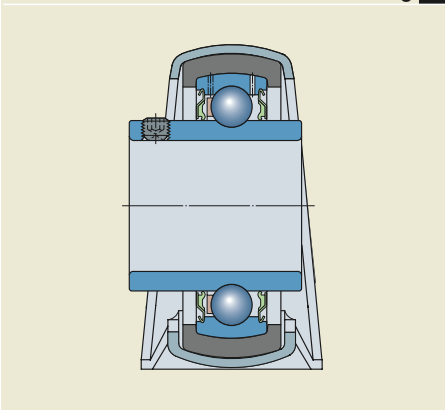

Fig 9

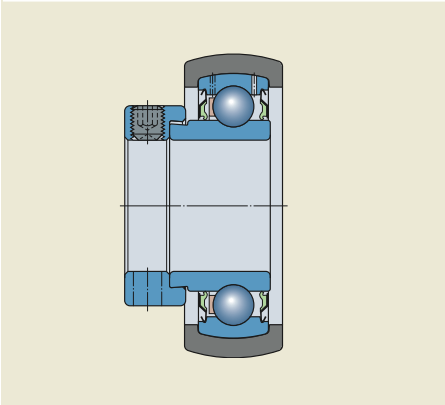

rgab.ru Берг АБ bergab@ya.ru Тел. (495)-228-06-21, факс (495) 22

rgab.ru Берг АБ bergab@ya.ru Тел. (495)-228-06-21, факс (495) 22

Rubber seating rings

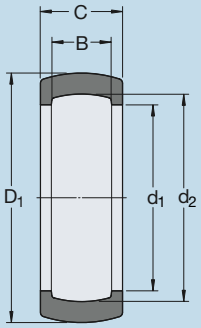

Y-bearing Outside diameter D	Rubber seating ring Dimensions D_1	d_1	d_2	B	C	Mass	Designation	Suitable Y-bearing Size
mm	mm					kg	–	–
40	47,3	35,5	39,8	12	18	0,012	**RIS 203**	203, 203/12, 203/15
47	52,3	41,2	46,8	14	19	0,012	**RIS 204**	204
52	62,3	46,4	51,8	15	20,5	0,036	**RIS 205**	205
62	72,3	54,6	61,8	18	21,5	0,031	**RIS 206 A**	206
72	80,3	63,7	71,8	19	23	0,032	**RIS 207 A**	207
80	85,3	70,7	79,7	21	24	0,025	**RIS 208 A**	208

rgab.ru Берг АБ bergab@ya.ru Тел. (495)-228-06-21, факс (495) 22

rgab.ru Берг АБ bergab@ya.ru Тел. (495)-228-06-21, факс (495) 22

End covers

To protect the bearing arrangement at the end of a shaft, and to avoid the possibility of an accident caused by an exposed shaft end, end covers are available for Y-TECH bearing units and for most cast iron Y-bearing units.

The end covers in the ECY 2 series (➔ **fig** 10)

- are made from polypropylene,
- can operate at temperatures up to +100 °C.

and can be snapped into the recesses provided in the housing bore.

In the product tables, the end covers are shown together with those units that can accommodate them. The designation of the end cover is listed together with the distance that the end cover protrudes from the housing (➔ **fig** 11).

The designation and the dimensions of the end covers are shown in **table** 5.

Fig 10

Fig 11

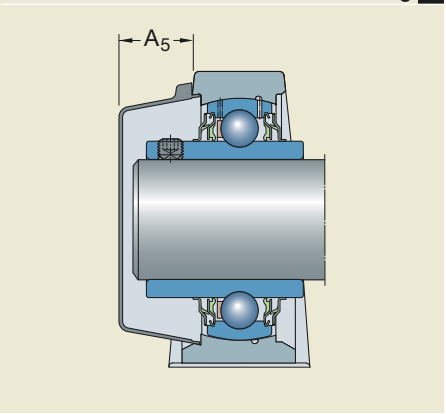

rgab.ru Берг АБ bergab@ya.ru Тел. (495)-228-06-21, факс (495) 22

rgab.ru Берг АБ bergab@ya.ru Тел. (495)-228-06-21, факс (495) 22

End covers

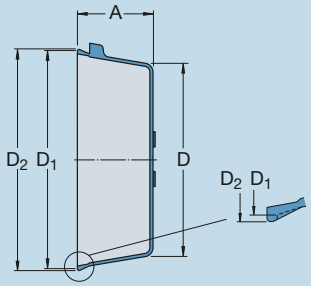

Dimensions				Mass	Designation	Suitable housing
D	D_1	D_2	A			Size
mm				g	–	–
44	49	50,5	23	7	**ECY 204**	504
49	54	55,5	23	9	**ECY 205**	505
59,5	65	66,5	25	14	**ECY 206**	506
69	75	76,5	27	18	**ECY 207**	507
76,5	83	84,5	28,5	22	**ECY 208**	508
81,5	88	89,5	29	24	**ECY 209**	509
86	94	95,5	35,5	30	**ECY 210**	510
96	105	106,5	40	37	**ECY 211**	511
107	116	118	42	50	**ECY 212**	512
117	126	128	42	56	**ECY 213**	513

rgab.ru Берг АБ bergab@ya.ru Тел. (495)-228-06-21, факс (495) 22

rgab.ru Берг АБ bergab@ya.ru Тел. (495)-228-06-21, факс (495) 22

Lubrication and maintenance

Grease fills

The standard SKF Y-bearing and Y-bearing unit is filled with a high-quality lithium-calcium base grease with an NLGI class 2 consistency. This grease is extremely water resistant and has a long life even under heavy loads. The additional properties of these greases are listed in **table 1**.

Y-bearings made of stainless steel, series YAR 2-2RF/HV, and Y-bearings with zinc coated rings and stainless steel flingers, series YAR 2-2RF/VE495, and all Y-TECH units in the SYKC, FYKC and FYTBKC series, which house these bearings are filled with a special non-toxic food compatible bearing grease. This grease

- fulfils the requirements listed in the "Guidelines of section 21 CFR 178.3570" of the FDA (US Food and Drug Administration) regulations and
- is approved by the USDA (United States Department of Agriculture) for Category H1 use (occasional contact with food stuffs).

This food compatible grease shows very good rust inhibiting properties, good water resistance and anti-wear characteristics as well as high ageing and oxidation resistance. Additional properties are listed in **table 1**.

rgab.ru Берг АБ bergab@ya.ru Тел. (495)-228-06-21, факс (495) 22

rgab.ru Берг АБ bergab@ya.ru Тел. (495)-228-06-21, факс (495) 22

Relubrication

Relubrication of Y-bearing units is not required if

- loads and speeds are moderate,
- vibrations do not occur and
- operating temperatures lie between +40 and +55 °C

or if they are not equipped with a grease nipple as is the case with Y-bearing units with a pressed steel housing.

In cases and applications where Y-bearings or Y-bearing units

- are exposed to high humidity or severe contamination,
- have to accommodate heavy loads,
- have to operate at high speeds or at temperatures above +55 °C for extended periods,

relubrication will enable the bearing to realize maximum service life.

When relubricating, grease should be pumped slowly into the running bearing until fresh grease starts to escape from the seal. Note: Excessive pressure from pumping too quickly may damage the seals.

Relubricating standard Y-bearing units
To relubricate standard Y-bearing units, SKF LGWA 2, LGMT 2 or LGMT 3 greases can be used. Each is fully compatible with the original grease fill from the factory.

Relubricating Y-TECH bearing units
To relubricate Y-TECH bearing units in the SYKC, FYKC and FYTBKC series the use of the food compatible SKF grease LGFP 2 is recommended.

Detailed information about all SKF bearing greases can be found in catalogue MP3000 "SKF Maintenance and Lubrication Products" or online at www.skf.com.

Table 1

Lubricating greases

Properties	Grease fills in standard Y-bearings, standard Y-bearing units	Y-bearings YAR 2-2RF/HV and YAR 2-2RF/VE95, Y-bearing units SYKC, FYKC and FYTBKC
Thickener	Lithium-calcium soap	Aluminium-complex soap
Base oil	Mineral oil	Synthetic hydrocarbon oil
Colour	Yellowish brown	Beige
Operating temperature, °C (continuous operation)	–20 to +120	–45 to +120
Reference temperature, °C	55	≈ 60
Kinematic viscosity of base oil, mm^2/s at 40 °C/100 °C	165/15	150/22
Consistency (to NLGI scale)	2	1
Other	Long life grease	Fulfils the requirements of the "Guidelines of section 21 CFR 178.3570" of the FDA (US Food and Drug Administration) regulations

rgab.ru Берг АБ bergab@ya.ru Тел. (495)-228-06-21, факс (495) 22

rgab.ru Берг АБ bergab@ya.ru Тел. (495)-228-06-21, факс (495) 22

Relubrication intervals

The relubrication interval t_f can be estimated from **diagram** 1 as a function of the rotational speed n (r/min), the bearing mean diameter d_m (➔ **table** 2) and the operating temperature (°C).

The recommended intervals correspond to a time when 90 % of the bearings are still reliably lubricated, and represent L_{10} grease life. When the L_{10} grease life is equivalent to or higher than the rating life of the Y-bearing, the bearing is considered to be lubricated for life and relubrication is not required.

The intervals obtained from **diagram** 1 are valid for standard Y-bearings and Y-bearing units with a lithium-calcium soap grease fill:

- on horizontal shafts,
- in stationary machines,
- at light loads ($C/P \geq 15$).

If operating conditions differ, reduce the relubrication intervals obtained from **diagram** 1, namely

- on vertical shafts by 50 %,
- at higher loads, e.g. at $C/P = 8$, by roughly 50 %.

In severe, very dirty or damp environments more frequent relubrication might be necessary. Also when the operating temperatures are below +40 °C for longer periods, the grease life is shortened because oil separation is reduced.

Vibrations have an influence on grease life too. The extent cannot be quantified exactly but it is noticeable at rising operating temperatures.

The values for reducing the relubrication intervals are estimated values. In cases of doubt, contact the SKF application engineering service.

Table 2

Mean diameter d_m

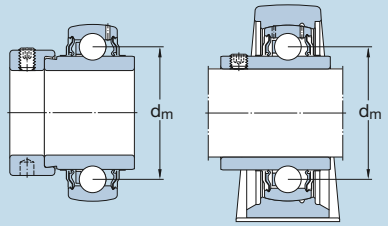

Designations Identification of size Y-bearing	Y-bearing unit	**Mean diameter** d_m
–		mm
203/12	**12**	28,5
203/15	**15**	28,5
203	**17**	28,5
204	**20**	33,5
204-012	**3/4**	33,5
205	**25**	38,5
205-100	**1.**	38,5
206	**30**	46
206-103	**1.3/16**	46
207	**35**	53,5
207-104	**1.1/4**	53,5
207-107	**1.7/16**	53,5
208	**40**	60
208-108	**1.1/2**	60
209	**45**	65
209-112	**1.3/4**	65
210	**50**	70
211	**55**	77,5
211-200	**2.**	77,5
212	**60**	85
213	**65**	92,5
213-208	**2.1/2**	92,5
214	**70**	97,5
215	**75**	102,5
216	**80**	110
217	**85**	117,5
218	**90**	125
220	**100**	140

rgab.ru Берг АБ bergab@ya.ru Тел. (495)-228-06-21, факс (495) 22

rgab.ru Берг АБ bergab@ya.ru Тел. (495)-228-06-21, факс (495) 22

Diagram 1

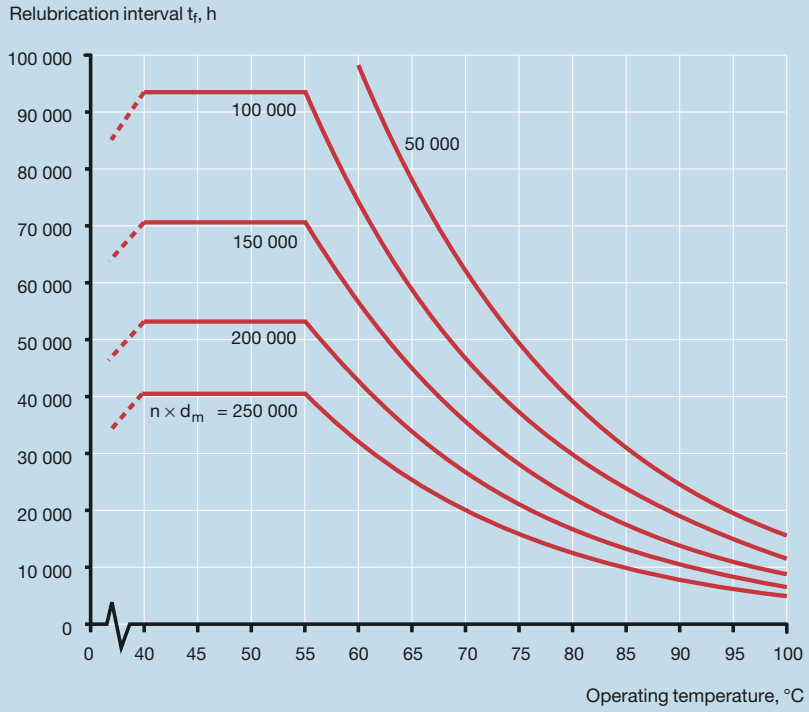

In cases where machines and equipment are used for a limited period of time, SKF recommends relubricating each bearing at the end of the operational period, i.e. immediately before being laid up.

rgab.ru Берг АБ bergab@ya.ru Тел. (495)-228-06-21, факс (495) 22

rgab.ru Берг АБ bergab@ya.ru Тел. (495)-228-06-21, факс (495) 22

Storing Y-bearings and Y-bearing units

Y-bearings and Y-bearing units are normally treated with a rust preventive compound and can be stored in their original unopened package for a number of years. However they should be kept in a vibration-free, dry environment where the relative humidity does not exceed 60 % and the temperature is reasonably constant.

When Y-bearings and Y-bearing units are stored for long periods they may have a higher initial starting torque than Y-bearings or units recently delivered from the factory. It may also be found that the lubricating properties of the grease have deteriorated after long storage periods.

Y-bearings and Y-bearing units, which are no longer in their original packages must be adequately protected against corrosion and contamination and should also be identified in some way by their complete designation.

rgab.ru Берг АБ bergab@ya.ru Тел. (495)-228-06-21, факс (495) 22

rgab.ru Берг АБ bergab@ya.ru Тел. (495)-228-06-21, факс (495) 22

Designation systems

The complete designation for a Y-bearing or a Y-bearing unit consists of

- prefixes, identifying the Y-bearing or Y-bearing unit series,
- figures, identifying the size,
- suffixes, identifying designs and variants.

More details regarding the structure of the basic designations and the supplementary designations can be obtained from the designation charts

- Y-bearing designation system (→ **table 1**, **page 48**),
- Y-bearing unit designation system (→ **table 2**, **page 49**).

rgab.ru Берг АБ bergab@ya.ru Тел. (495)-228-06-21, факс (495) 22

rgab.ru Берг АБ bergab@ya.ru Тел. (495)-228-06-21, факс (495) 22

Table 1

Y-bearing designation system

Examples					
	YAR 208-2RF/HV	YAR	2	08	2RF/HV
	YEL 203/15-2FW	YEL	2	03/15	2FW

Bearing series

YAR Inner ring extended on both sides, with grub screws
YAT Inner ring extended on one side, with grub screws
YEL Inner ring extended on both sides, with eccentric locking collar
YET Inner ring extended on one side, with eccentric locking collar
YSA Inner ring extended on both sides

Dimension series

2 Bearing to ISO 9628:1992
17262 Bearing to ISO 15:2000, Dimension Series 02, sphered outside diameter
17263 Bearing to ISO 15:2000, Dimension Series 03, sphered outside diameter

Bore diameter

Bearings for metric shafts
03/12 12 mm bore diameter
03/15 15 mm bore diameter
03 17 mm bore diameter
04 20 mm bore diameter
to
20 100 mm bore diameter

Bearings for inch-size shafts
Three-figure combination that follows the designation of the basic metric bearing and is separated from this by a hyphen; the first figure is the number of whole inches and the second and third figures are the number of sixteenths of an inch, e.g. 204-012
-012 3/4 in = 19,050 mm bore diameter
-100 1 in = 25,400 mm bore diameter
to
-208 2 1/2 in = 63,500 mm bore diameter

Suffixes

Seals
– Contact standard “Superagriseal” on both sides of the bearing
2F Contact standard “Superagriseal” with additional plain flinger on both sides of the bearing
2RF Contact standard “Superagriseal” with additional rubberized flinger on both sides of the bearing
2RS1 Contact seal of synthetic rubber with sheet steel reinforcement on both sides of the bearing
VP076 Low friction non-contacting seal on both sides of the bearing

Material
HV Bearing components of stainless steel and non-toxic (food-grade) grease
VA201 Bearing with pressed steel cage for high temperatures
VA228 Bearing with “coronet” cage of graphite for temperatures –150 to +350 °C
VE495 Zinc-coated inner and outer ring and stainless steel flingers, non-toxic (food-grade) grease
VL065 Zinc-coated inner ring bore and side faces

Other features
C Cylindrical outside diameter
K Tapered bore, taper 1:12
U Bearing without eccentric locking collar
W Bearing without lubrication hole(s)
W64 Solid Oil lubrication

rgab.ru Берг АБ bergab@ya.ru Тел. (495)-228-06-21, факс (495) 22

rgab.ru Берг АБ bergab@ya.ru Тел. (495)-228-06-21, факс (495) 22

Table 2

Y-bearing unit designation system

Examples

	FY	TB	KC	30	NTR	/VE495
FYTBKC 30 NTR/VE495	**FY**	**TB**	**KC**	**30**	**NTR**	**/VE495**
SYJ 30 KF	**SYJ**			**30**	**KF**	
SY 1.1/2 TF	**SY**			**1.1/2**	**TF**	
TUJ 50 TF	**TUJ**			**50**	**TF**	
PFD 40	**PF**	**D**		**40**		

Identification of housing type

J stands for dimensions to standard JIS 1559-1995

FY(J) Flanged housing
P Plummer block housing, pressed steel
PF Flanged housing, pressed steel
SY(J) Plummer block housing
TU(J) Take-up housing

Identification of housing design

– Base version; when flanged: square
C Round flanged housing
D Triangular flanged housing
F Plummer block housing with short base
T Oval flanged housing
TB Oval flanged housing
TF Oval flanged housing without relubrication facility

Identification of housing material

– Grey cast iron
K Composite material with zinc-coated sheet steel inserts, black coloured
KC Composite material with stainless steel inserts, white coloured

Identification of size

Bearing units for metric shafts: in millimetres uncoded
12 12 mm bore diameter
100 100 mm bore diameter
Bearing units for inch-size shafts: in inches uncoded
3/4 $^{3}/_{4}$ in = 19,050 mm bore diameter
2.7/16 2 $^{7}/_{16}$ in = 61,912 mm bore diameter
Housings from cast iron or composite material
503 for Y-bearings of sizes 203, 203/12 and 203/15
to
520 for Y-bearings of size 220
Housings from sheet steel (not supplied as bearing unit)
40 40 mm housing bore diameter
90 90 mm housing bore diameter

Identification of inserted Y-bearing

FM Y-bearing with an eccentric locking collar, series YET 2
KF Y-bearing with tapered bore, series YSA 2-2FK
RM Y-bearing with grub screws, series YAT 2
NTH Y-bearing with grub screws, series YAR-2RF/HV
NTR Y-bearing with grub screws, series YAR-2RF/VE495
TF Y-bearing with grub screws, series YAR 2-2F
TR Y-bearing with grub screws, series YAR 2-2RF
WF Y-bearing with an eccentric locking collar, series YEL 2-2F

Other features

See **table 1** "Y-bearing designation system".

rgab.ru Берг АБ bergab@ya.ru Тел. (495)-228-06-21, факс (495) 22

rgab.ru Берг АБ bergab@ya.ru Тел. (495)-228-06-21, факс (495) 22

rgab.ru Берг АБ bergab@ya.ru Тел. (495)-228-06-21, факс (495) 22

rgab.ru Берг АБ bergab@ya.ru Тел. (495)-228-06-21, факс (495) 22

Product data

Y-bearings **53**

Y-bearing plummer block units **75**

Y-bearing flanged units **109**

Y-bearing take-up units **161**

rgab.ru Берг АБ bergab@ya.ru Тел. (495)-228-06-21, факс (495) 22

rgab.ru Берг АБ bergab@ya.ru Тел. (495)-228-06-21, факс (495) 2

rgab.ru Берг АБ bergab@ya.ru Тел. (495)-228-06-21, факс (495) 2

rgab.ru Берг АБ bergab@ya.ru Тел. (495)-228-06-21, факс (495) 22

Y-bearings

Designs **54**
Special designs 55

Y-bearings with grub screws **56**
Bearings made of rolling bearing steel 56
Bearings with zinc-coated bearing rings 57
Stainless steel bearings 57

Y-bearings with an eccentric locking collar **58**

Y-bearings with a tapered bore **59**

Y-bearings with a standard inner ring **59**

Seals **60**
Standard seals 60
Standard seals with additional flinger 60
Multiple seals 60
Contact seals 61
Shields 61
Permissible operating temperatures for seals 61

Bearing data – general **62**
Dimensions 62
Tolerances 62
Radial internal clearance 63
Cages 64
Grease fills 64
Mounting 64

Product tables **65**
Y-bearings with grub screws 65
Y-bearings with grub screws and food-grade grease 67
Y-bearings with an eccentric locking collar 68
Y-bearings on an adapter sleeve 70
Y-bearings with a standard inner ring 72

rgab.ru Берг АБ bergab@ya.ru Тел. (495)-228-06-21, факс (495) 22

rgab.ru Берг АБ bergab@ya.ru Тел. (495)-228-06-21, факс (495) 22

Designs

SKF Y-bearings, which are usually referred to as insert bearings, are basically sealed deep groove ball bearings in the 62 and 63 series, with a convex outer ring. These bearings are manufactured in a number of different sizes and series and are available with a standard inner ring or an inner ring that is extended on one or both sides (➔ **fig 1**).

The various insert bearing series differ in the way the bearing is located onto the shaft. The most common methods use any one of the following:

- grub screws (➔ **fig 2**),
- eccentric locking collar (➔ **fig 3**),
- adapter sleeve (➔ **fig 4**),
- interference fit (➔ **fig 5**).

The standard SKF assortment includes Y-bearings made of rolling bearing steel as well as stainless steel and Y-bearings with zinc-coated components.

Fig 1

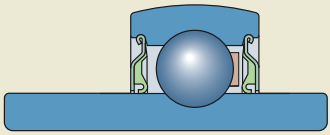

Fig 2

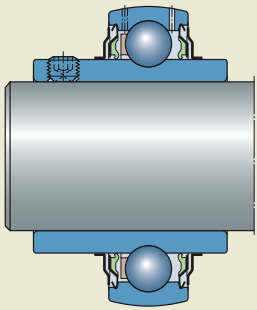

Fig 3

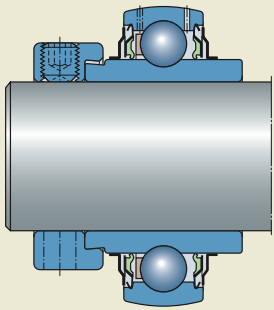

rgab.ru Берг АБ bergab@ya.ru Тел. (495)-228-06-21, факс (495) 22

rgab.ru Берг АБ bergab@ya.ru Тел. (495)-228-06-21, факс (495) 22

Fig 4

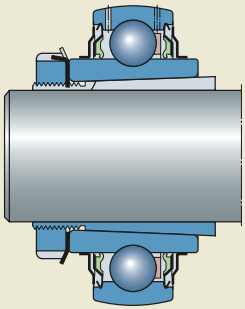

Fig 5

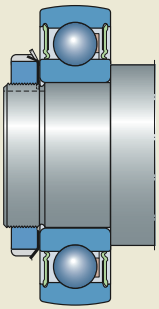

Special designs
In addition to the standard range, the following special insert bearings are available:

- Y-bearings for high temperature applications,
- Y-bearings with Solid Oil.

Other variants include:

- special coatings,
- low friction seals or
- special grease fills.

These special bearings are designed for applications where operating temperatures may exceed the range for standard bearings; where conventional lubrication methods or materials can not be used; or where smooth running is a key operational parameter.

Additional information about

- Y-bearings for high temperatures or
- Y-bearings with Solid Oil

can be found in the SKF General Catalogue or the “SKF Interactive Engineering Catalogue” on CD-ROM or online at www.skf.com.

rgab.ru Берг АБ bergab@ya.ru Тел. (495)-228-06-21, факс (495) 22

rgab.ru Берг АБ bergab@ya.ru Тел. (495)-228-06-21, факс (495) 22

Y-bearings with grub screws

Y-bearings with grub screws in the inner ring are locked in position on the shaft by tightening the two hexagonal grub (set) screws with cup point, positioned 120 degrees apart. These bearings are suitable for applications where the direction of rotation is constant or alternating. Two different standard designs are available.

Y- bearings in the YAT 2 series have an extended inner ring on one side, and are sealed with the rugged standard "Super-agriseal" (➔ **fig 6**). The outer ring has two lubrication holes as standard.

Y-bearings in the YAR 2 series have an extended inner ring on both sides (➔ **fig 7**). This reduces the extent to which the inner ring can tilt on the shaft, which enables the bearing to run more smoothly. These bearings are fitted with the rugged "Super-agriseal" and one of the following flinger options:

- plain sheet steel flingers, designation suffix 2F, or
- rubberized sheet steel flingers (multiple seal), designation suffix 2RF.

The outer ring has two lubrication holes as standard.

Bearings without lubrication holes can be supplied on request. They are identified by the suffix W.

Bearings made of rolling bearing steel
Y-bearings in the YAT 2 and YAR 2 standard series are manufactured from high-grade carbon chromium steel. The SKF range comprises bearings for metric shafts from 12 to 100 mm and inch size shafts from 3/4 to 2 1/2 in (➔ product table on **pages 65** and **66**).

Fig 6

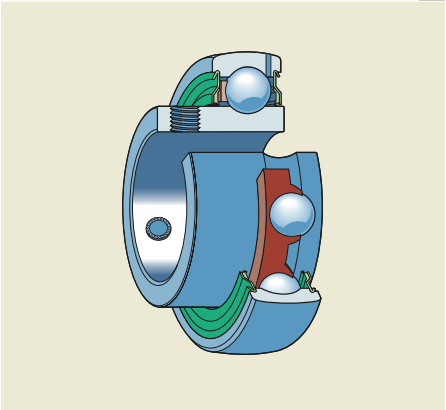

Fig 7

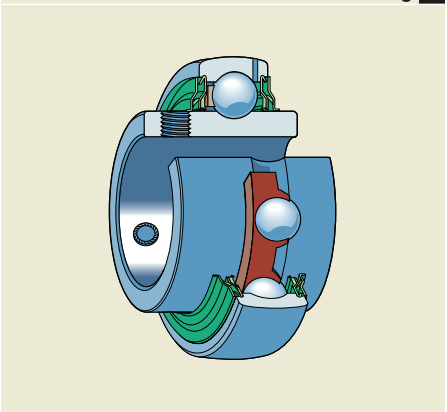

rgab.ru Берг АБ bergab@ya.ru Тел. (495)-228-06-21, факс (495) 22

rgab.ru Берг АБ bergab@ya.ru Тел. (495)-228-06-21, факс (495) 22

Bearings with zinc-coated rings
Y-bearings with an extended inner ring on both sides (YAR 2 series) are also available with zinc-coated rings for use in corrosive environments. These bearings, series designation YAR 2-2RF/VE495,

- use multiple seals in food-compatible rubber and stainless steel flingers,
- are fitted with grub screws made of stainless steel,
- are filled with a food-grade grease and
- can be relubricated through one lubrication hole in the outer ring.

The SKF range of Y-bearings with zinc-coated rings covers bearings for metric shafts from 20 to 40 mm (➔ product table on **page 67**).

Stainless steel bearings
All the Y-bearing metal components are made of stainless steel. This includes the rings, balls, sheet metal parts of the seal and the grub screws. The inner ring is extended on both sides. These bearings, series designation YAR2-2RF/HV,

- are fitted with highly efficient multiple seals in food compatible rubber and stainless steel flingers,
- are filled with a food-grade grease and
- can be relubricated through one lubrication hole in the outer ring.

The SKF range covers bearings for metric shafts from 20 to 40 mm as well as inch size shafts from $^3/_4$ to 1 $^1/_2$ in (➔ product table on **page 67**).

The dynamic load carrying capacity of a stainless steel bearing is less than that of a similarly sized standard steel bearing.

rgab.ru Берг АБ bergab@ya.ru Тел. (495)-228-06-21, факс (495) 22

rgab.ru Берг АБ bergab@ya.ru Тел. (495)-228-06-21, факс (495) 22

Y-bearings with an eccentric locking collar

Y-bearings with an eccentric locking collar are intended primarily for use in applications where the direction of rotation is constant. On one side of the bearing inner ring is an eccentric extension that fits the locking collar. Turning the locking collar on the inner ring extension in the direction of rotation locks the collar and bearing on the shaft. A single grub screw further secures the collar to the shaft. There are two standard series available from SKF.

Y-bearings in the YET 2 series have an extended inner ring on one side and are fitted with the rugged "Superagriseal" (➔ **fig 8**). The eccentric collar is zinc-coated. The outer ring has two lubrication holes as standard.

Y-bearings in the YEL 2 series have an extended inner ring on both sides (➔ **fig 9**). This reduces the extent to which the inner ring can tilt on the shaft, which enables the bearing to run more smoothly. These bearings are fitted with the rugged "Superagriseal" and one of the following flinger options:

- plain sheet steel flinger, designation suffix 2F, or
- rubberized sheet steel flinger (multiple seal), designation suffix 2RF.

The outer ring has two lubrication holes as standard.

Bearings without lubrication holes can be supplied on request. They are identified by the suffix W.

The SKF range comprises bearings for metric shafts from 15 to 60 mm and inch size shafts from 3/4 to 1 1/2 in (➔ product table on **pages 68** and **69**).

Fig 8

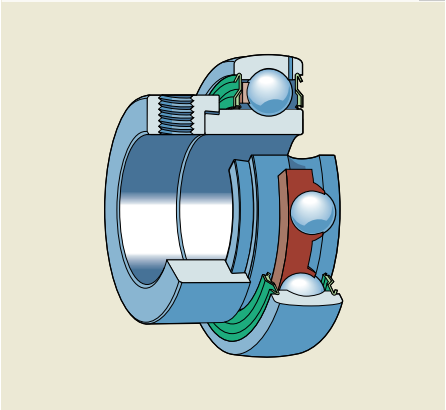

Fig 9

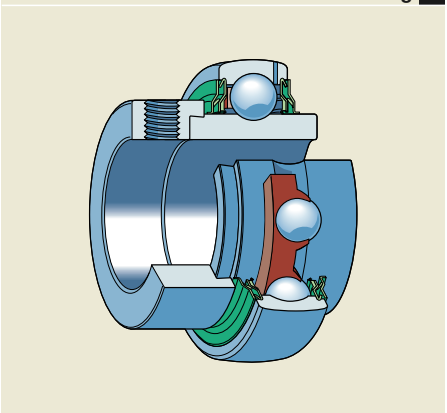

rgab.ru Берг АБ bergab@ya.ru Тел. (495)-228-06-21, факс (495) 22

rgab.ru Берг АБ bergab@ya.ru Тел. (495)-228-06-21, факс (495) 2

Fig 10

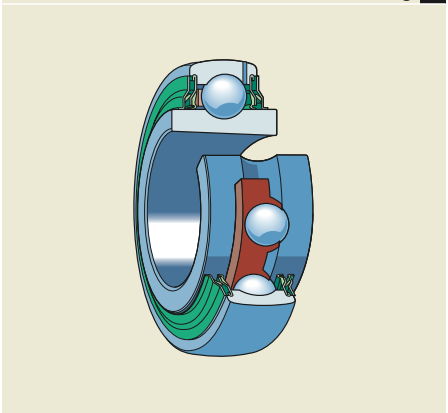

Fig 11

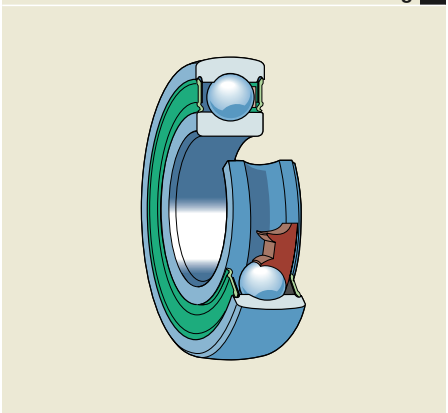

Y-bearings with a tapered bore

Y-bearings in the YSA 2-2FK series (➔ **fig** 10) have an extended inner ring on both sides and a tapered bore (taper 1:12) enabling them to be mounted on a standard adapter sleeve in the H 23 series. The appropriate adapter sleeve is not part of the bearing and must be ordered separately.

Y-bearings with a tapered bore are delivered exclusively with the rugged standard "Superagriseal" fitted with additional plain sheet steel flingers. The outer ring has two lubrication holes as standard.

Mounting onto an adapter sleeve enables the bearings to operate at higher speeds and run more smoothly, in applications where the direction of rotation is constant or alternating.

The SKF range, which comprises bearings with bore diameters from 25 to 65 mm, fits adapter sleeves in the H 23 series for metric shafts ranging from 20 to 60 mm. These bearings can also be used on adapter sleeves in the HA 23, HE 23 and HS 23 series for inch shafts ranging from 3/4 to 2 3/8 in (➔ product table on **pages 70** and **71**).

Y-bearings with a standard inner ring

Y-bearings in the 17262(00)-2RS1 and 17263(00)-2RS1 series (➔ **fig** 11), with a standard inner ring have normal tolerances for the bearing bore diameter and are located on the shaft using an appropriate interference fit. The only difference between these Y-bearings and deep groove ball bearings in the 62 and 63 series is the sphered outside surface of the outer ring. They do not have any lubrication holes in the outer ring.

These Y-bearings are suitable for applications where the direction of the load alternates and where smooth running is a key operating requirement. These bearings can accommodate heavier axial loads than Y-bearings of any other design. They can also operate at the same speeds as the corresponding sealed deep groove ball bearings.

The SKF range comprises bearings for metric shafts from 17 to 60 mm (➔ product table on **page 72**).

rgab.ru Берг АБ bergab@ya.ru Тел. (495)-228-06-21, факс (495) 2

rgab.ru Берг АБ bergab@ya.ru Тел. (495)-228-06-21, факс (495) 22

Seals

Since Y-bearings were originally developed for use in agricultural machines and equipment, much attention has been paid to their seals. For that very reason SKF Y-bearings are equipped with different seal configurations that vary depending on the bearing series.

Standard seals
The standard seal for SKF Y-bearings is the "Superagriseal". It consists of a pressed sheet steel washer with a sealing lip made of nitrile butadiene rubber (NBR) vulcanized to its inner surface (➔ **fig** 12). The non-contact sheet steel washer forms a narrow gap with the cylindrical surface of the inner ring shoulder and protects the land-riding seal against coarse contaminants.

Standard seals with additional flinger
For more contaminated conditions, a sealed bearing with an inner ring extended on both sides should be used. These bearings are equipped with additional plain sheet steel flingers outside the integral standard "Superagriseal" (➔ **fig** 13) and are identified by the designation suffix 2F. The flingers are made of sheet steel or stainless sheet steel respectively, have an interference fit on the inner ring and considerably enhance the sealing effect without increasing friction.

Multiple seals
For Y-bearing arrangements requiring a high degree of reliability even under extremely contaminated conditions, a bearing with an inner ring extended on both sides should be used with the highly efficient multiple seal arrangement.

In this sealing arrangement, (➔ **fig** 14) a flinger with a vulcanized rubber lip is fitted outside the standard "Superagriseal". This nitrile butadiene rubber lip seals axially against the integral seal. The space between the integral seal and the rubberized flinger is filled with grease to provide additional protection.

Fig 12

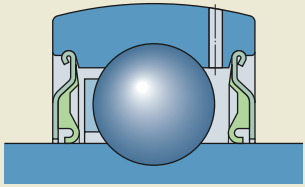

Fig 13

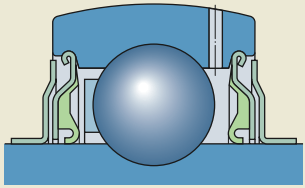

Fig 14

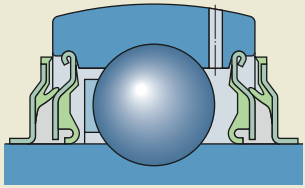

rgab.ru Берг АБ bergab@ya.ru Тел. (495)-228-06-21, факс (495) 22

rgab.ru Берг АБ bergab@ya.ru Тел. (495)-228-06-21, факс (495) 22

Fig 15

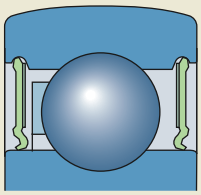

Fig 16

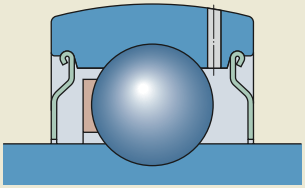

Contact seals
Y-bearings with a standard inner ring, series 17262(00)-2RS1 and 17263(00)-2RS1, are equipped with the RS1 seal developed for standard SKF deep groove ball bearings (➔ **fig** 15). These seals are made from oil and wear resistant nitrile butadiene rubber (NBR), are reinforced with a pressed steel insert and seal against the surface of the inner ring shoulder.

Shields
Y-bearings are also available with shields (➔ **fig** 16) and are identified by the designation suffix VP076.

Y-bearings fitted with non-contact shields are used in temperature or speed sensitive applications where additional friction is not desirable. In applications where shielded bearings are used, contamination should not be severe and there should be no danger of water, steam or moisture entering into the bearing.

Permissible operating temperatures for seals
Contact seals can be used at operating temperatures between –30 and +100 °C. Temperatures up to +120 °C are also possible for brief periods, but will have a negative effect on grease life.

rgab.ru Берг АБ bergab@ya.ru Тел. (495)-228-06-21, факс (495) 22

rgab.ru Берг АБ bergab@ya.ru Тел. (495)-228-06-21, факс (495) 22

Bearing data – general

Dimensions

The principal dimensions of Y-bearings in the

- YAR 2, YET 2 and YEL 2 series conform to ISO 9628:1992,
- 17262(00)-2RS1 and 17263(00)-2RS1 series correspond with those of deep groove ball bearings in the 62 and 63 series and are in accordance with ISO 15:1998, except that the bearings have a sphered outside diameter,
- YSA 2 K series conform to standard JIS 1558-1995,
- YAT 2 series is not standardized, but common on the market.

The dimensions of the adapter sleeves in the H 23 series, which are normally used to locate YSA 2-2FK bearings onto the shaft, correspond to ISO 2982-1:1995.

Tolerances

The bore and outside diameter of Y-bearings are produced to tolerances indicated in **table 1**. Symbols used are explained in the following. The values specified there for bearings in the

- YAT, YAR, YET and YEL series conform to ISO 9628:1992,
- 17262(00)-2RS1 and 17263(00)-2RS1 series conform to ISO 492:2002.

Bearings in the YSA 2 K series are manufactured with a tapered bore, taper 1 :12, and are designed to fit adapter sleeves in the H 23 series, for metric and inch size shafts.

Symbols

d	nominal bore diameter
Δ_{dmp}	deviation of the mean bore diameter from the nominal
D	nominal outside diameter
Δ_{Dmp}	deviation of the mean outside diameter from the nominal

Table 1

Tolerances for Y-bearings

Nominal diameter		**Inner ring** Bearings of series YAT 2, YAR 2, YET 2, YEL 2		17262(00), 17263(00)		**Outer ring** All bearings	
d, D		**Δ_{dmp}**		**Δ_{dmp}**		**Δ_{Dmp}**	
over	incl.	high	low	high	low	high	low
mm		µm		µm		µm	
10	**18**	+15	+5	0	–8	–	–
18	**30**	+18	+5	0	–10	–	–
30	**50**	+19	+5	0	–12	0	–10
50	**80**	+21	+5	0	–15	0	–10
80	**120**	+25	+5	–	–	0	–15
120	**150**	–	–	–	–	0	–15
150	**180**	–	–	–	–	0	–20

rgab.ru Берг АБ bergab@ya.ru Тел. (495)-228-06-21, факс (495) 22

rgab.ru Берг АБ bergab@ya.ru Тел. (495)-228-06-21, факс (495) 22

Y-bearings for inch shafts have the same bore tolerances as the corresponding bearings for metric shafts, with the exception of a 1 1/4 inch bearing. The bore of this bearing has the same tolerance as a bearing with a 30 mm bore.

Radial internal clearance
Y-bearings are manufactured as standard with the internal clearance indicated in **table 2**. The values specified there for bearings in the

- YAT, YAR, YET and YEL series correspond to Group N radial internal clearance according to ISO 9628:1992,
- YSA 2 K series correspond to Group 3 radial internal clearance according to ISO 9628:1992,
- 17262(00)-2RS1 and 17263(00)-2RS1 series correspond to Group N radial internal clearance to ISO 5753:1991.

The values are valid for unmounted bearings under zero measuring load. Y-bearings for inch shafts have the same radial internal clearance as a corresponding metric bearing.

3

Table 2

Radial internal clearance for Y-bearings

Bore diameter d		**Radial internal clearance of Y-bearings of series** YAT 2, YAR 2, YET 2, YEL 2		YSA 2 K		17262(00), 17263(00)	
over	incl.	min	max	min	max	min	max
mm		µm					
–	**18**	10	25	–	–	3	18
18	**20**	12	28	–	–	5	20
20	**30**	12	28	23	41	5	20
30	**40**	13	33	28	46	6	20
40	**50**	14	36	30	51	6	23
50	**65**	18	43	38	61	8	28
65	**80**	20	51	–	–	–	–
80	**100**	24	58	–	–	–	–

rgab.ru Берг АБ bergab@ya.ru Тел. (495)-228-06-21, факс (495) 22

rgab.ru Берг АБ bergab@ya.ru Тел. (495)-228-06-21, факс (495) 22

Cages
All standard Y-bearings are fitted with an injection moulded cage of glass fibre reinforced polyamide 6,6 (➔ **fig 17**). These cages exhibit excellent performance characteristics in a variety of applications where operating temperatures do not exceed +120 °C.

The lubricants generally used for Y-bearings do not have any detrimental effect on cage properties.

Grease fills
All standard design SKF Y-bearings are filled with a high quality long lasting lithium-calcium base grease of consistency 2 to the NLGI scale.

Y-bearings

- made of stainless steel, series YAR 2-2RF/HV, and
- with zinc-coated rings, series YAR 2-2RF/VE495,

which meet the demands of food-processing machinery in a corrosive environment, are filled with a non-toxic, food-grade grease based on a synthetic hydrocarbon oil using an aluminium-complex soap as a thickener.

For additional information about lubrication and different lubricants, please refer to the section “Lubrication and maintenance”, starting on **page 42**.

Mounting
The mounting procedures for Y-bearings depend on the means by which the unit is attached to the shaft. The procedures are described in detail in the section “Mounting instructions”, starting on **page 169**.

Y-bearings with a standard inner ring are mounted on the shaft with an interference fit.

Fig 17

rgab.ru Берг АБ bergab@ya.ru Тел. (495)-228-06-21, факс (495) 22

rgab.ru Берг АБ bergab@ya.ru Тел. (495)-228-06-21, факс (495) 22

Y-bearings with grub screws

d **12 – 40** mm
3/4 – 1 3/4 in

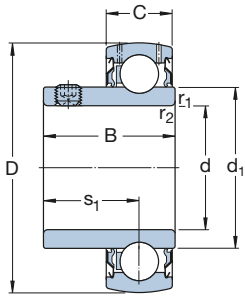

YAT

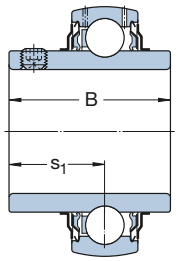

YAR-2F

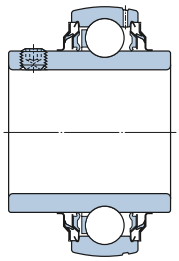

YAR-2RF

3

Dimensions							Basic load ratings		Fatigue load limit	Limiting speed	Mass	Designation
							dynamic	static		with shaft tolerance		
d	D	B	C	d_1	s_1	$r_{1,2}$ min	C	C_0	P_u	h6		
mm/in							kN		kN	r/min	kg	–
12	40	27,4	12	24,2	15,9	0,3	9,56	4,75	0,2	9 500	0,11	**YAR 203/12-2F**
15	40	27,4	12	24,2	15,9	0,3	9,56	4,75	0,2	9 500	0,10	**YAR 203/15-2F**
17	40	22,1	12	24,2	15,9	0,3	9,56	4,75	0,2	9 500	0,074	**YAT 203**
	40	27,4	12	24,2	15,9	0,3	9,56	4,75	0,2	9 500	0,088	**YAR 203-2F**
3/4	47	31	14	28,2	18,3	0,6	12,7	6,55	0,28	8 500	0,14	**YAR 204-012-2F**
	47	31	14	28,2	18,3	0,6	12,7	6,55	0,28	5 000	0,14	**YAR 204-012-2RF**
20	47	25,5	14	28,2	18,3	0,6	12,7	6,55	0,28	8 500	0,11	**YAT 204**
	47	31	14	28,2	18,3	0,6	12,7	6,55	0,28	8 500	0,14	**YAR 204-2F**
	47	31	14	28,2	18,3	0,6	12,7	6,55	0,28	5 000	0,14	**YAR 204-2RF**
25	52	27,2	15	33,7	19,5	0,6	14	7,8	0,335	7 000	0,14	**YAT 205**
	52	34,1	15	33,7	19,8	0,6	14	7,8	0,335	7 000	0,17	**YAR 205-2F**
	52	34,1	15	33,7	19,8	0,6	14	7,8	0,335	4 300	0,17	**YAR 205-2RF**
1	52	34,1	15	33,7	19,8	0,6	14	7,8	0,335	7 000	0,17	**YAR 205-100-2F**
	52	34,1	15	33,7	19,8	0,6	14	7,8	0,335	4 300	0,17	**YAR 205-100-2RF**
30	62	30,2	18	39,7	21	0,6	19,5	11,2	0,475	6 300	0,23	**YAT 206**
	62	38,1	18	39,7	22,2	0,6	19,5	11,2	0,475	6 300	0,28	**YAR 206-2F**
	62	38,1	18	39,7	22,2	0,6	19,5	11,2	0,475	3 800	0,28	**YAR 206-2RF**
1 1/4	72	42,9	19	46,1	25,4	1	25,5	15,3	0,655	5 300	0,46	**YAR 207-104-2F**
	72	42,9	19	46,1	25,4	1	25,5	15,3	0,655	3 200	0,46	**YAR 207-104-2RF**
35	72	33	19	46,1	23,3	1	25,5	15,3	0,655	5 300	0,31	**YAT 207**
	72	42,9	19	46,1	25,4	1	25,5	15,3	0,655	5 300	0,41	**YAR 207-2F**
	72	42,9	19	46,1	25,4	1	25,5	15,3	0,655	3 200	0,41	**YAR 207-2RF**
1 1/2	80	49,2	21	51,8	30,2	1	30,7	19	0,8	4 800	0,59	**YAR 208-108-2F**
	80	49,2	21	51,8	30,2	1	30,7	19	0,8	2 800	0,59	**YAR 208-108-2RF**
40	80	36	21	51,8	25,3	1	30,7	19	0,8	4 800	0,43	**YAT 208**
	80	49,2	21	51,8	30,2	1	30,7	19	0,8	4 800	0,55	**YAR 208-2F**
	80	49,2	21	51,8	30,2	1	30,7	19	0,8	2 800	0,55	**YAR 208-2RF**
1 3/4	85	49,2	22	56,8	30,2	1	33,2	21,6	0,915	4 300	0,62	**YAR 209-112-2F**
	85	49,2	22	56,8	30,2	1	33,2	21,6	0,915	2 400	0,62	**YAR 209-112-2RF**

rgab.ru Берг АБ bergab@ya.ru Тел. (495)-228-06-21, факс (495) 22

rgab.ru Берг АБ bergab@ya.ru Тел. (495)-228-06-21, факс (495) 22

Y-bearings with grub screws

d **45 – 100** mm
2 – 2 1/2 in

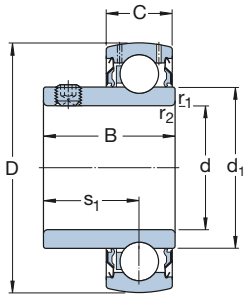

YAT

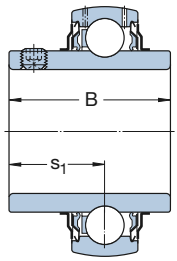

YAR-2F

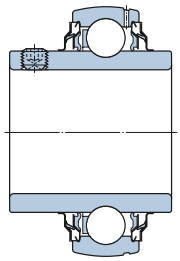

YAR-2RF

Dimensions							Basic load ratings		Fatigue load limit	Limiting speed	Mass	Designation
d	D	B	C	d_1	s_1	$r_{1,2}$ min	dynamic C	static C_0	P_u	with shaft tolerance h6		
mm/in							kN		kN	r/min	kg	–
45	85	37	22	56,8	25,8	1	33,2	21,6	0,915	4 300	0,48	**YAT 209**
	85	49,2	22	56,8	30,2	1	33,2	21,6	0,915	4 300	0,60	**YAR 209-2F**
	85	49,2	22	56,8	30,2	1	33,2	21,6	0,915	2 400	0,60	**YAR 209-2RF**
50	90	38,8	22	62,5	27,6	1	35,1	23,2	0,98	4 000	0,54	**YAT 210**
	90	51,6	22	62,5	32,6	1	35,1	23,2	0,98	4 000	0,69	**YAR 210-2F**
	90	51,6	22	62,5	32,6	1	35,1	23,2	0,98	2 200	0,69	**YAR 210-2RF**
2	100	55,6	25	69,1	33,4	1	43,6	29	1,25	3 600	1,10	**YAR 211-200-2F**
	100	55,6	25	69,1	33,4	1	43,6	29	1,25	1 900	1,10	**YAR 211-200-2RF**
55	100	55,6	25	69,1	33,4	1	43,6	29	1,25	3 600	0,94	**YAR 211-2F**
	100	55,6	25	69,1	33,4	1	43,6	29	1,25	1 900	0,94	**YAR 211-2RF**
60	110	65,1	26	75,6	39,7	1,5	52,7	36	1,53	3 400	1,30	**YAR 212-2F**
	110	65,1	26	75,6	39,7	1,5	52,7	36	1,53	1 800	1,30	**YAR 212-2RF**
2 1/2	120	68,3	27	82,5	42,9	1,5	57,2	40	1,7	3 000	1,75	**YAR 213-208-2F**
	120	68,3	27	82,5	42,9	1,5	57,2	40	1,7	1 600	1,75	**YAR 213-208-2RF**
65	120	68,3	27	82,5	42,9	1,5	57,2	40	1,7	3 000	1,70	**YAR 213-2F**
	120	68,3	27	82,5	42,9	1,5	57,2	40	1,7	1 600	1,70	**YAR 213-2RF**
70	125	69,9	28	87	39,7	1,5	62,4	45	1,86	2 800	1,85	**YAR 214-2F**
75	130	73,1	29	92	46,1	1,5	66,3	49	2,04	2 600	2,05	**YAR 215-2F**
80	140	77,9	30	97	47,7	2	72,8	53	2,16	2 400	2,45	**YAR 216-2F**
85	150	81	34	105	50,8	2	83,2	62	2,4	2 200	3,20	**YAR 217-2F**
90	160	89	36	112	54	2	95,6	72	2,7	2 000	4,00	**YAR 218-2F**
100	180	98,4	40	122	63,4	2	124	93	3,35	1 900	5,25	**YAR 220-2F**

rgab.ru Берг АБ bergab@ya.ru Тел. (495)-228-06-21, факс (495) 22

rgab.ru Берг АБ bergab@ya.ru Тел. (495)-228-06-21, факс (495) 22

Y-bearings with grub screws and food-grade grease

d **20 – 40** mm
3/4 – 1 1/2 in

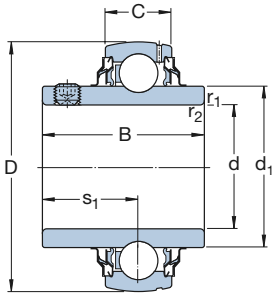

Dimensions							Basic load ratings		Fatigue load limit	Limiting speed	Mass	Designation
							dynamic	static		with shaft tolerance		
d	D	B	C	d_1	s_1	$r_{1,2}$ min	C	C_0	P_u	h6		
mm/in							kN		kN	r/min	kg	–
3/4	47	31	14	28,2	18,3	0,6	10,8	6,55	0,28	5 000	0,14	**YAR 204-012-2RF/HV**
20	47	31	14	28,2	18,3	0,6	10,8	6,55	0,28	5 000	0,14	**YAR 204-2RF/HV**
	47	31	14	28,2	18,3	0,6	12,7	6,55	0,28	5 000	0,14	**YAR 204-2RF/VE495**
25	52	34,1	15	33,7	19,8	0,6	11,9	7,8	0,335	4 300	0,17	**YAR 205-2RF/HV**
	52	34,1	15	33,7	19,8	0,6	14	7,8	0,335	4 300	0,17	**YAR 205-2RF/VE495**
1	52	34,1	15	33,7	19,8	0,6	11,9	7,8	0,335	4 300	0,17	**YAR 205-100-2RF/HV**
30	62	38,1	18	39,7	22,2	0,6	16,3	11,2	0,475	3 900	0,28	**YAR 206-2RF/HV**
	62	38,1	18	39,7	22,2	0,6	19,5	11,2	0,475	3 900	0,28	**YAR 206-2RF/VE495**
1 3/16	62	38,1	18	39,7	22,2	0,6	16,3	11,2	0,475	3 900	0,27	**YAR 206-103-2RF/HV**
1 1/4	72	42,9	19	46,1	25,4	1	21,6	15,3	0,655	3 200	0,46	**YAR 207-104-2RF/HV**
35	72	42,9	19	46,1	25,4	1	21,6	15,3	0,655	3 200	0,41	**YAR 207-2RF/HV**
	72	42,9	19	46,1	25,4	1	25,5	15,3	0,655	3 200	0,41	**YAR 207-2RF/VE495**
1 7/16	72	42,9	19	46,1	25,4	1	21,6	15,3	0,655	3 200	0,38	**YAR 207-107-2RF/HV**
1 1/2	80	49,2	21	51,8	30,2	1	24,7	19	0,8	2 800	0,59	**YAR 208-108-2RF/HV**
40	80	49,2	21	51,8	30,2	1	24,7	19	0,8	2 800	0,55	**YAR 208-2RF/HV**
	80	49,2	21	51,8	30,2	1	30,7	19	0,8	2 800	0,55	**YAR 208-2RF/VE495**

rgab.ru Берг АБ bergab@ya.ru Тел. (495)-228-06-21, факс (495) 22

rgab.ru Берг АБ bergab@ya.ru Тел. (495)-228-06-21, факс (495) 22

Y-bearings with an eccentric locking collar

d **15 – 60** mm
3/4 – 1 1/2 in

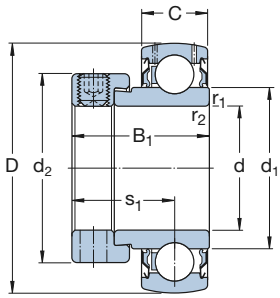

YET

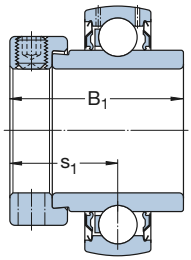

YEL-2F

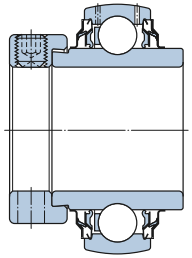

YEL-2RF

Dimensions								Basic load ratings		Fatigue load limit	Limiting speed	Mass	Designation
								dynamic	static		with shaft tolerance		
d	D	B_1	C	d_1	d_2	s_1	$r_{1,2}$ min	C	C_0	P_u	h6		
mm/in								kN		kN	r/min	kg	–
15	40	28,6	12	24,2	28,6	22,1	0,3	9,56	4,75	0,2	9 500	0,12	**YET 203/15**
17	40	28,6	12	24,2	28,6	22,1	0,3	9,56	4,75	0,2	9 500	0,10	**YET 203**
3/4	47	31	14	28,2	33	23,5	0,6	12,7	6,55	0,28	8 500	0,16	**YET 204-012**
20	47	31	14	28,2	33	23,5	0,6	12,7	6,55	0,28	8 500	0,18	**YET 204**
	47	31	14	28,2	33	23,5	0,6	12,7	6,55	0,28	8 500	0,18	**YET 204/VL065**
	47	43,7	14	28,2	33	26,6	0,6	12,7	6,55	0,28	8 500	0,19	**YEL 204-2F**
	47	43,7	14	28,2	33	26,6	0,6	12,7	6,55	0,28	5 000	0,19	**YEL 204-2RF/VL065**
25	52	31	15	33,7	37,4	23,5	0,6	14	7,8	0,335	7 000	0,18	**YET 205**
	52	31	15	33,7	37,4	23,5	0,6	14	7,8	0,335	7 000	0,18	**YET 205/VL065**
	52	44,4	15	33,7	37,4	26,9	0,6	14	7,8	0,335	7 000	0,24	**YEL 205-2F**
	52	44,4	15	33,7	37,4	26,9	0,6	14	7,8	0,335	4 300	0,24	**YEL 205-2RF/VL065**
1	52	31	15	33,7	37,4	23,5	0,6	14	7,8	0,335	7 000	0,18	**YET 205-100**
30	62	35,7	18	39,7	44,2	26,7	0,6	19,5	11,2	0,475	6 300	0,30	**YET 206**
	62	35,7	18	39,7	44,2	26,7	0,6	19,5	11,2	0,475	6 300	0,30	**YET 206/VL065**
	62	48,4	18	39,7	44,2	30,1	0,6	19,5	11,2	0,475	6 300	0,36	**YEL 206-2F**
	62	48,4	18	39,7	44,2	30,1	0,6	19,5	11,2	0,475	3 900	0,36	**YEL 206-2RF/VL065**
35	72	38,9	19	46,1	51,1	29,4	1	25,5	15,3	0,655	5 300	0,44	**YET 207**
	72	38,9	19	46,1	51,1	29,4	1	25,5	15,3	0,655	5 300	0,44	**YET 207/VL065**
	72	51,1	19	46,1	51,1	32,3	1	25,5	15,3	0,655	5 300	0,55	**YEL 207-2F**
	72	51,1	19	46,1	51,1	32,3	1	25,5	15,3	0,655	3 200	0,55	**YEL 207-2RF/VL065**
1 1/2	80	43,7	21	51,8	58,1	32,7	1	30,7	19	0,8	4 800	0,63	**YET 208-108**
40	80	43,7	21	51,8	58,1	32,7	1	30,7	19	0,8	4 800	0,59	**YET 208**
	80	43,7	21	51,8	58,1	32,7	1	30,7	19	0,8	4 800	0,59	**YET 208/VL065**
	80	56,3	21	51,8	58,1	34,9	1	30,7	19	0,8	4 800	0,67	**YEL 208-2F**
	80	56,3	21	51,8	58,1	34,9	1	30,7	19	0,8	2 800	0,67	**YEL 208-2RF/VL065**

rgab.ru Берг АБ bergab@ya.ru Тел. (495)-228-06-21, факс (495) 22

rgab.ru Берг АБ bergab@ya.ru Тел. (495)-228-06-21, факс (495) 22

Dimensions								Basic load ratings		Fatigue load limit	Limiting speed	Mass	Designation
								dynamic	static		with shaft tolerance h6		
d	D	B_1	C	d_1	d_2	s_1	$r_{1,2}$ min	C	C_0	P_u			
mm								kN		kN	r/min	kg	–
45	85	43,7	22	56,8	63,5	32,7	1	33,2	21,6	0,915	4 300	0,65	**YET 209**
	85	56,3	22	56,8	63,5	34,9	1	33,2	21,6	0,915	4 300	0,74	**YEL 209-2F**
50	90	43,7	22	62,5	67,5	32,7	1	35,1	23,2	0,98	4 000	0,70	**YET 210**
	90	62,7	22	62,5	67,5	38,1	1	35,1	23,2	0,98	4 000	0,89	**YEL 210-2F**
55	100	48,4	25	69,1	76,2	36,4	1	43,6	29	1,25	3 600	0,90	**YET 211**
	100	71,4	25	69,1	76,2	43,6	1	43,6	29	1,25	3 600	1,20	**YEL 211-2F**
60	110	53,1	26	75,6	83,7	39,6	1,5	52,7	36	1,53	3 400	1,30	**YET 212**
	110	77,8	26	75,6	83,7	46,8	1,5	52,7	36	1,53	3 400	1,60	**YEL 212-2F**

rgab.ru Берг АБ bergab@ya.ru Тел. (495)-228-06-21, факс (495) 22

rgab.ru Берг АБ bergab@ya.ru Тел. (495)-228-06-21, факс (495) 22

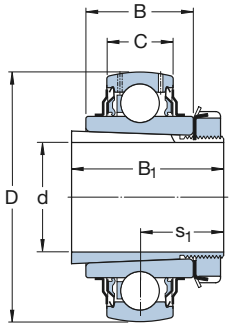

Dimensions						**Basic load ratings**		**Fatigue load limit**	**Limiting speed**	**Mass**	**Designations**	
						dynamic	static				Bearing	Adapter sleeve
d	D	B	B_1	C	s_1	C	C_0	P_u				
mm/in						kN		kN	r/min	kg	–	
3/4	52	24	35	15	20	14	7,8	0,332	7 000	0,22	**YSA 205-2FK**	**HE 2305**
20	52	24	35	15	20	14	7,8	0,335	7 000	0,22	**YSA 205-2FK**	**H 2305**
15/16	62	28	38	18	22	19,5	11,2	0,475	6 300	0,35	**YSA 206-2FK**	**HA 2306**
25	62	28	38	18	22	19,5	11,2	0,475	6 300	0,33	**YSA 206-2FK**	**H 2306**
1	62	28	38	18	22	19,5	11,2	0,475	6 300	0,33	**YSA 206-2FK**	**HE 2306**
30	72	30,5	43	19	24,3	25,5	15,3	0,655	5 300	0,47	**YSA 207-2FK**	**H 2307**
1 3/16	72	30,5	43	19	24,3	25,5	15,3	0,655	5 300	0,47	**YSA 207-2FK**	**HA 2307**
1 1/4	80	33,9	46	21	27	30,7	19	0,8	4 800	0,69	**YSA 208-2FK**	**HE 2308**
35	80	33,9	46	21	27	30,7	19	0,8	4 800	0,69	**YSA 208-2FK**	**H 2308**
1 7/16	85	35	50	22	28,5	33,2	21,6	0,915	4 300	0,81	**YSA 209-2FK**	**HA 2309**
1 1/2	85	35	50	22	28,5	33,2	21,6	0,915	4 300	0,77	**YSA 209-2FK**	**HE 2309**
40	85	35	50	22	28,5	33,2	21,6	0,915	4 300	0,77	**YSA 209-2FK**	**H 2309**
1 5/8	90	37	55	22	30,5	35,1	23,2	0,98	4 000	0,94	**YSA 210-2FK**	**HS 2310**
1 11/16	90	37	55	22	30,5	35,1	23,2	0,98	4 000	0,91	**YSA 210-2FK**	**HA 2310**
1 3/4	90	37	55	22	30,5	35,1	23,2	0,98	4 000	0,88	**YSA 210-2FK**	**HE 2310**
45	90	37	55	22	30,5	35,1	23,2	0,98	4 000	0,88	**YSA 210-2FK**	**H 2310**
1 15/16	100	40	59	25	32,5	43,6	29	1,25	3 600	1,10	**YSA 211-2FK**	**HA 2311**
50	100	40	59	25	32,5	43,6	29	1,25	3 600	1,10	**YSA 211-2FK**	**H 2311**
2	100	40	59	25	32,5	43,6	29	1,25	3 600	1,10	**YSA 211-2FK**	**HE 2311 B**

rgab.ru Берг АБ bergab@ya.ru Тел. (495)-228-06-21, факс (495) 22

rgab.ru Берг АБ bergab@ya.ru Тел. (495)-228-06-21, факс (495) 22

Dimensions						Basic load ratings		Fatigue load limit	Limiting speed	Mass	Designations	
						dynamic	static				Bearing	Adapter sleeve
d	D	B	B_1	C	s_1	C	C_0	P_u				
mm/in						kN		kN	r/min	kg	–	
2 1/8	110	42,5	62	26	34,3	52,7	36	1,53	3 400	1,40	**YSA 212-2FK**	**HS 2312**
55	110	42,5	62	26	34,3	52,7	36	1,53	3 400	1,40	**YSA 212-2FK**	**H 2312**
2 3/16	120	43,5	65	27	35,8	57,2	40	1,7	3 000	1,90	**YSA 213-2FK**	**HA 2313**
2 1/4	120	43,5	65	27	35,8	57,2	40	1,7	3 000	1,80	**YSA 213-2FK**	**HE 2313**
60	120	43,5	65	27	35,8	57,2	40	1,7	3 000	1,70	**YSA 213-2FK**	**H 2313**
2 3/8	120	43,5	65	27	35,8	57,2	40	1,7	3 000	1,70	**YSA 213-2FK**	**HS 2313**

rgab.ru Берг АБ bergab@ya.ru Тел. (495)-228-06-21, факс (495) 22

rgab.ru Берг АБ bergab@ya.ru Тел. (495)-228-06-21, факс (495) 22

Y-bearings with a standard inner ring
d **17 – 60** mm

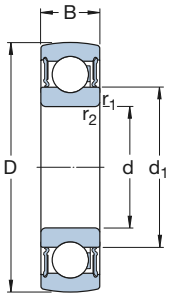

Dimensions					Basic load ratings		Fatigue load limit	Limiting speed	Mass	Designation
					dynamic	static				
d	D	B	d_1	$r_{1,2}$ min	C	C_0	P_u			
mm					kN		kN	r/min	kg	–
17	40	12	24,2	0,6	9,56	4,75	0,2	12 000	0,056	**1726203-2RS1**
20	47	14	28,5	1	12,7	6,55	0,28	10 000	0,095	**1726204-2RS1**
25	52	15	34	1	14	7,8	0,335	8 500	0,11	**1726205-2RS1**
	62	17	36,6	1.1	22,5	11,6	0,49	7 500	0,20	**1726305-2RS1**
30	62	16	40,3	1	19,5	11,2	0,475	7 500	0,18	**1726206-2RS1**
	72	19	44,6	1,1	28,1	16	0,67	6 300	0,30	**1726306-2RS1**
35	72	17	46,9	1,1	25,5	15,3	0,655	6 300	0,25	**1726207-2RS1**
	80	21	49,6	1,5	33,2	19	0,815	6 000	0,40	**1726307-2RS1**
40	80	18	52,6	1,1	30,7	19	0,8	5 600	0,32	**1726208-2RS1**
	90	23	56,1	1,5	41	24	1	5 000	0,55	**1726308-2RS1**
45	85	19	57,6	1,1	33,2	21,6	0,915	5 000	0,37	**1726209-2RS1**
	100	25	62,1	1,5	52,7	31,5	1,34	4 500	0,73	**1726309-2RS1**
50	90	20	62,5	1,1	35,1	23,2	0,98	4 800	0,41	**1726210-2RS1**
	110	27	68,7	2	61,8	38	1,6	4 300	0,95	**1726310-2RS1**
55	100	21	69	1,5	43,6	29	1,25	4 300	0,54	**1726211-2RS1**
60	110	22	75,5	1,5	52,7	36	1,53	4 000	0,70	**1726212-2RS1**

rgab.ru Берг АБ bergab@ya.ru Тел. (495)-228-06-21, факс (495) 22

rgab.ru Берг АБ bergab@ya.ru Тел. (495)-228-06-21, факс (495) 22

rgab.ru Берг АБ bergab@ya.ru Тел. (495)-228-06-21, факс (495) 22

rgab.ru Берг АБ bergab@ya.ru Тел. (495)-228-06-21, факс (495) 2

rgab.ru Берг АБ bergab@ya.ru Тел. (495)-228-06-21, факс (495) 2

rgab.ru Берг АБ bergab@ya.ru Тел. (495)-228-06-21, факс (495) 22

Y-bearing plummer block units

Designs **76**

Y-TECH plummer block units **78**

Y-bearing plummer block units with a cast housing **78**

Y-bearing plummer block units with a pressed steel housing **79**

Data – general **80**
- Dimensions 80
- Tolerances 80
- Radial internal clearance 80
- Materials 80
- Load carrying ability of the housings 81
- Grease fills 81
- Attaching to a support surface 82
- End covers 82
- Mounting 82

Product tables **84**
- Y-TECH plummer block units
  - with grub screws 84
  - with grub screws and food-grade grease 86
- Y-bearing plummer block units with a cast housing
  - and grub screws 88
  - and an eccentric locking collar 92
  - and an adapter sleeve 94
- Y-bearing plummer block units with a shortened cast housing
  - and grub screws 98
  - and an eccentric locking collar 100
- Y-bearing plummer blocks with a pressed steel housing
  - and grub screws 102
  - and an eccentric locking collar 106

rgab.ru Берг АБ bergab@ya.ru Тел. (495)-228-06-21, факс (495) 22

rgab.ru Берг АБ bergab@ya.ru Тел. (495)-228-06-21, факс (495) 22

Designs

SKF Y-bearing plummer block units are available as standard in almost twenty different designs. These plummer block units are available from stock with housings made of

- composite material (➔ **fig 1**) referred to as Y-TECH plummer block units,
- grey cast iron (➔ **fig 2**) or
- pressed sheet steel (➔ **fig 3**).

They are located onto the shaft via the inner ring of the insert bearing with either

- grub screws,
- eccentric locking collar or
- adapter sleeve.

The Y-bearing can be sealed with either

- the standard "Superagriseal",
- the standard "Superagriseal" and an additional flinger or
- the highly effective multiple seal.

Additional information about Y-bearings can be found in the section "Y-bearings", starting on **page 53**.

Y-bearing plummer block units available as units are listed in the product tables. Other units can be composed by ordering the parts separately. The adjacent matrix shows the wide variety of combinations of Y-bearings and housings.

Fig 1

Fig 2

Fig 3

rgab.ru Берг АБ bergab@ya.ru Тел. (495)-228-06-21, факс (495) 22

rgab.ru Берг АБ bergab@ya.ru Тел. (495)-228-06-21, факс (495) 22

Y-bearing unit	Y-bearing housings					
Y-bearings	SYK 5(00) SYKC 5(00) N	SY 5(00) M	SYJ 5(00)	SYF 5(00)	SYFJ 5(00)	P 40 – P 85
YAR 2-2F	**SYK .. TF**	**SY .. TF**	**SYJ .. TF**	**SYF .. TF**	**SYFJ .. TF**	Parts must be ordered separately
	20 – 40 mm	12 – 65 mm	20 – 100 mm	20 – 50 mm	20 – 50 mm	12 – 45 mm
	3/4 – 1 1/2 in	3/4 – 2 1/2 in	3/4 – 2 1/2 in	3/4 – 1 3/4 in	3/4 – 1 3/4 in	3/4 – 1 3/4 in
YAR 2-2RF	**SYK .. TR**	**SY .. TR**	Parts must be ordered separately	Parts must be ordered separately	Parts must be ordered separately	Parts must be ordered separately
	20 – 40 mm	20 – 60 mm	20 – 60 mm	20 – 50 mm	20 – 50 mm	20 – 45 mm
	3/4 – 1 1/2 in	3/4 – 2 1/2 in	3/4 – 2 1/2	3/4 – 1 3/4 in	3/4 – 1 3/4 in	3/4 – 1 3/4 in
YAR 2-2RF/HV	**SYKC .. NTH**	Parts must be ordered separately	Parts must be ordered separately	Parts must be ordered separately	Parts must be ordered separately	Parts must be ordered separately
	20 – 40 mm	20 – 40 mm	20 – 40 mm	20 – 40 mm	20 – 40 mm	20 – 40 mm
	3/4 – 1 1/2 in	3/4 – 1 1/2 in	3/4 – 1 1/2 in	3/4 – 1 1/2 in	3/4 – 1 1/2 in	3/4 – 1 1/2 in
YAR 2-2RF/VE495	Parts must be ordered separately					
	20 – 40 mm	20 – 40 mm	20 – 40 mm	20 – 40 mm	20 – 40 mm	20 – 40 mm
YAT 2	Parts must be ordered separately					
	20 – 40 mm	17 – 50 mm	20 – 50 mm	20 – 50 mm	20 – 50 mm	17 – 45 mm
YEL 2-2F	Parts must be ordered separately	**SY .. WF**	Parts must be ordered separately	Parts must be ordered separately	Parts must be ordered separately	Parts must be ordered separately
	20 – 40 mm	20 – 60 mm	20 – 60 mm	20 – 50 mm	20 – 50 mm	20 – 45 mm
YEL 2-2RF/VL065	Parts must be ordered separately					
	20 – 40 mm	20 – 40 mm	20 – 40 mm	20 – 40 mm	20 – 40 mm	20 – 40 mm
YET 2	Parts must be ordered separately	**SY .. FM**	Parts must be ordered separately	**SYF .. FM**	Parts must be ordered separately	Parts must be ordered separately
	20 – 40 mm	15 – 60 mm	20 – 60 mm	20 – 50 mm	20 – 50 mm	15 – 45 mm
	3/4 – 1 1/2 in	3/4 – 1 1/2 in	3/4 – 1 1/2 in	3/4 – 1 1/2 in	3/4 – 1 1/2 in	3/4 – 1 1/2 in
YSA 2-2FK on adapter sleeve	Parts must be ordered separately	Parts must be ordered separately	**SYJ .. KF**	Parts must be ordered separately	Parts must be ordered separately	Parts must be ordered separately
	20 – 35 mm	20 – 60 mm	20 – 60 mm	20 – 45 mm	20 – 45 mm	20 – 40 mm
	3/4 – 1 1/4 in	3/4 – 2 3/8 in	3/4 – 2 3/8 in	3/4 – 1 3/4 in	3/4 – 1 3/4 in	3/4 – 1 1/2 in
17262(00)	Parts must be ordered separately					
	20 – 40 mm	17 – 60 mm	20 – 60 mm	20 – 50 mm	20 – 50 mm	17 – 45 mm

4

rgab.ru Берг АБ bergab@ya.ru Тел. (495)-228-06-21, факс (495) 22

rgab.ru Берг АБ bergab@ya.ru Тел. (495)-228-06-21, факс (495) 22

Y-TECH plummer block units

Y-TECH plummer block units have housings made of composite material. They were developed for bearing arrangements that must operate reliably in difficult environments for extended periods without maintenance.

Y-TECH plummer block units in the SYK series are fitted with Y-bearings in the YAR 2-2F and YAR 2-2RF series and are attached to the shaft with grub screws (➔ **fig 4**). These units are part of the standard SKF product range.

Y-TECH plummer block units in the SYKC series (➔ **fig 5**) are designed primarily for use in food processing machines or in corrosive environments. They are equipped with stainless steel Y-bearings that are filled with a non-toxic food grade grease and can be relubricated (YAR 2-2RF/HV series, NTH unit designation suffix). This grease is based on a synthetic hydrocarbon oil that uses an aluminium-complex soap as a thickener (➔ **pages 42** and **43**).

Y-bearing plummer block units with a cast housing

Y-bearing plummer block units with a grey cast iron housing can be relubricated through a grease nipple in the housing. This makes them especially suitable for bearing arrangements that operate under any of the following conditions:

- high levels of contamination,
- high speeds,
- high temperatures,
- relatively heavy loads.

Two different housing designs are available. These are housings in the

- SY(J) series with two oblong holes for the attachment bolts in the base of the housing (➔ **fig 6**) and

Fig 4

Fig 5

Fig 6

rgab.ru Берг АБ bergab@ya.ru Тел. (495)-228-06-21, факс (495) 22

rgab.ru Берг АБ bergab@ya.ru Тел. (495)-228-06-21, факс (495) 22

- SYF(J) series with a shortened base that contains two threaded holes in the support base (➔ **fig 7**).

Y-bearing plummer block units with a pressed steel housing

Y-bearing plummer block units (➔ **fig 8**) with a pressed steel housing are designed for simple applications with limited loads and speeds. The two-part housing, which has no provision for relubrication, is ordered separately from the insert bearing. The individual items that make up a Y-bearing unit are:

- the two-part housing,
- the Y-bearing and, if necessary,
- the rubber seating ring.

The advantage of ordering individual components is that a large number of combinations is possible.

Rubber seating rings made of synthetic rubber in the RIS 2 series (➔ **fig 9**) are available for these Y-bearing plummer blocks to reduce running noise and dampen vibrations. The rubber seating rings also enable the bearings to be displaced slightly in their housings, for example to accommodate shaft elongation.

Y-bearing units with a rubber seating ring are also listed in the product tables. Detailed information on rubber seating rings can be found in the section "Design of bearing arrangements" on **pages 38** and **39**.

Fig 7

Fig 8

Fig 9

rgab.ru Берг АБ bergab@ya.ru Тел. (495)-228-06-21, факс (495) 22

rgab.ru Берг АБ bergab@ya.ru Тел. (495)-228-06-21, факс (495) 22

Data – general

Dimensions
The boundary dimensions for the Y-bearing plummer block housings in the

- SY series conform to ISO 3228:1993,
- SYJ and SYFJ series conform to standard JIS B 1559-1995 and
- P series conform to ISO 3228:1993.

The centre height (H_1) for housings in the P series deviates slightly from the standardized values.

The dimensions for SYF series housings are dictated by practical application requirements and are not covered by any international or national standards.

Tolerances
The tolerance for the shaft centre height H_1 (→ **fig 10**) is

- ±0,25 mm for plummer block units with a bearing bore up to and including 40 mm and
- ±0,30 mm for the larger plummer block units.

For Y-bearing plummer block units with composite or cast housings, the bearing is matched to the diameter of the housing bore so that the outer ring is prevented from turning in its seat, but still able to compensate for misalignment.

Additional information about tolerances for the inner ring bore are listed in the section "Y-bearings" on **pages 62** and **63**.

Radial internal clearance
The Y- bearing used in a plummer block unit has the same radial internal clearance as a similarly sized individual Y-bearing.

Additional information about the radial internal clearance as well as the clearance values can be found in the section "Y-bearings" on **page 63**.

Fig 10

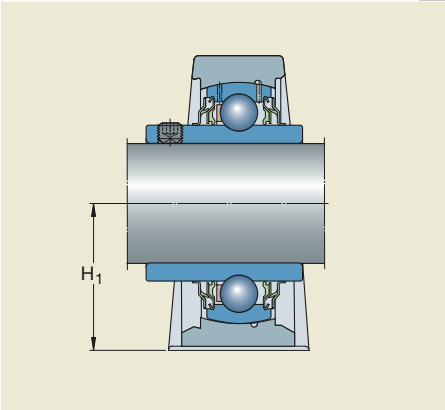

Materials

Composite housings

Y-housings in the SYK series are made of injection moulded glass fibre reinforced polyamide 6,6. A steel coil embedded in the housing adds greater stability to the form of the housing even with increasing temperature. The housing bolt holes are reinforced with zinc-plated sheet steel inserts. The standard housing colour is black.

Y-housings in the SYKC series correspond to those in the SYK series, except that they are white and equipped with stainless steel bolt hole inserts.

Cast iron housings

Housings in the SY(J) and SYF(J) series are manufactured from grey cast iron EN-GJL HB195 according to EN 1561:1997.

Pressed steel housings

Pressed steel housings in the P series are made from cold-rolled sheet steel and are zinc-coated for corrosion protection.

rgab.ru Берг АБ bergab@ya.ru Тел. (495)-228-06-21, факс (495) 22

rgab.ru Берг АБ bergab@ya.ru Тел. (495)-228-06-21, факс (495) 22

Load carrying ability of the housings
Housings made of composite material and grey cast iron are able to withstand the same dynamic and static loads as the Y-bearings they incorporate. These Y-bearing units can also be used in applications where shock loads or variable axial loads occur.

Because of their special properties, SKF Y-bearing units are used in applications in virtually every industry. If however, they are to be used in an application where health, safety, or the environment is at risk, SKF recommends contacting the SKF application engineering service during the design phase.

Pressed steel housings have a lower load carrying capacity than their insert bearings. Permissible radial loads are specified in the product tables. The axial load should not exceed 20 % of the permissible radial load.

If the bearing arrangement will be subjected to shock loads or variable axial loads, a grey cast iron or Y-TECH housing should always be used.

Grease fills
With the exception of SYKC Y-TECH units, all standard SKF insert bearings are filled with a high-quality long life lithium-calcium base grease with an NLGI class 2 consistency. The bearing inserted in SYKC bearing units, which can be relubricated, is filled with a non-toxic food grade grease. This grease is based on a synthetic hydrocarbon oil using an aluminium-complex soap as a thickener.

For additional information about lubricants and lubrication, please refer to the section “Lubrication and maintenance”, starting on **page 42**.

rgab.ru Берг АБ bergab@ya.ru Тел. (495)-228-06-21, факс (495) 22

rgab.ru Берг АБ bergab@ya.ru Тел. (495)-228-06-21, факс (495) 22

Attaching to a support surface
Plummer block units have two bolt holes in the housing base through which they can be attached to their support surface with threaded fasteners. The bolt holes vary for different housings. Housings made of

- composite material have oblong bolt holes, reinforced with zinc coated sheet steel or stainless steel inserts,
- grey cast iron – SY and SYJ series – have cast oblong bolt holes,
- grey cast iron – SYF and SYFJ series – have threaded holes in the support base,
- pressed steel have round bolt holes.

If the loads acting on a housing are between 55° to 120° (➔ **fig** 11), Y-TECH bearing units and SY and SYJ plummer block units should be pinned to the support surface or stops should be provided in the direction of the load.

Recommendations for the position and size of the dowel pin holes for SY and SYJ series housings are provided in **table** 1.

End covers
To protect the shaft ends and avoid any accidents, end covers are available for composite and grey cast iron Y-bearing plummer block units (➔ **fig** 12).

In the product tables, end covers in the ECY 2 series are shown together with the appropriate bearing unit. The designation of the end cover is listed together with the distance that the end cover protrudes from the housing.

Additional information about end covers can be found in the section “Design of bearing arrangements” on **pages 40** and **41**.

Mounting
The procedure for mounting a Y-bearing plummer block unit depends on

- the design of the housing and
- the method used to attach the unit to the shaft.

These methods are described in detail in the section “Mounting instructions”, starting on **page 169**.

Fig 11

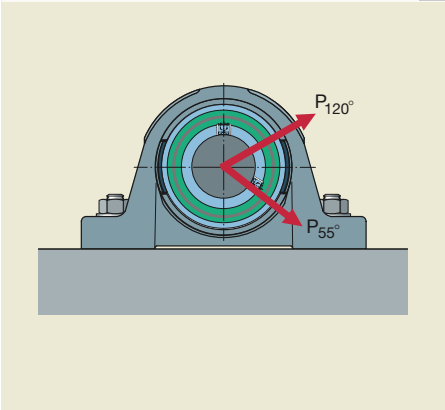

Fig 12

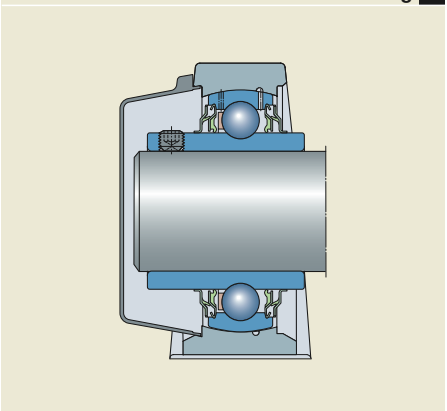

rgab.ru Берг АБ bergab@ya.ru Тел. (495)-228-06-21, факс (495) 22

rgab.ru Берг АБ bergab@ya.ru Тел. (495)-228-06-21, факс (495) 22

Table 1

Position and size of dowel pin holes for Y-bearing plummer block housings in the SY and SYJ series

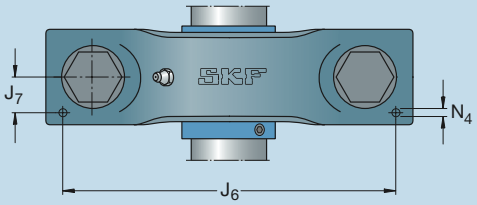

Housing size	Dimensions for units of SYJ series J_6	J_7	N_4	SY series J_6	J_7	N_4
–	mm					
503	–	–	–	118	11,5	2
504	118	12,5	2	118	11,5	2
505	130	14	2	120	13	2
506	155	15	2	140	14	2
507	153	16	4	146	15,5	4
508	170	17,5	4	161	17	4
509	174	18	4	173	17	4
510	190	21	5	187	19	5
511	201	21	5	201	21	5
512	223	23,5	5	222	21	5
513	241	23	5	238	22,5	5
514	246	26	6	–	–	–
515	255	27	6	–	–	–
516	270	28	6	–	–	–
518	303	32	8	–	–	–
520	352	33,5	8	–	–	–

rgab.ru Берг АБ bergab@ya.ru Тел. (495)-228-06-21, факс (495) 22

rgab.ru Берг АБ bergab@ya.ru Тел. (495)-228-06-21, факс (495) 22

Y-TECH plummer block units with grub screws
d **20 – 40** mm

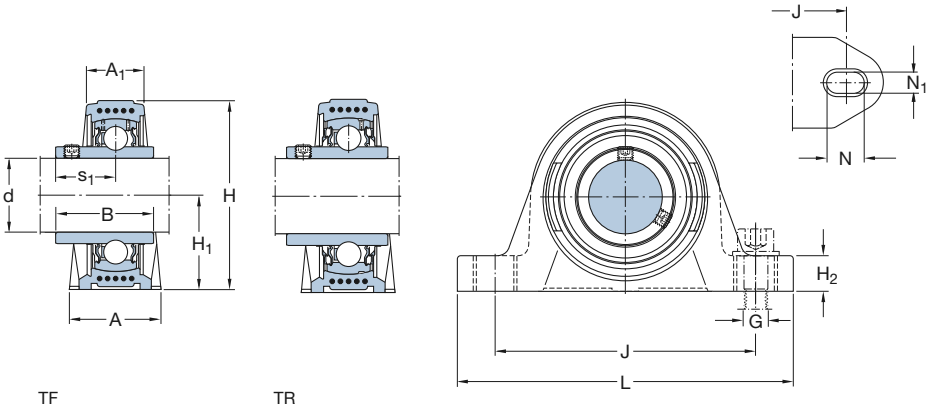

Dimensions													Basic load ratings		Fatigue load limit	Limiting speed	Designation
													dynamic	static		with shaft tolerance h6	Complete unit
d	A	A_1	B	H	H_1	H_2	J	L	N	N_1	G	s_1	C	C_0	P_u		
mm													kN		kN	r/min	–
20	32	21	31	64	33,3	16	96	126	17,5	12	10	18,3	12,7	6,55	0,28	8 500	**SYK 20 TF**
	32	21	31	64	33,3	16	96	126	17,5	12	10	18,3	12,7	6,55	0,28	5 000	**SYK 20 TR**
25	32	22	34,1	70,5	36,5	16	105	134	17,5	12	10	19,8	14	7,8	0,335	7 000	**SYK 25 TF**
	32	22	34,1	70,5	36,5	16	105	134	17,5	12	10	19,8	14	7,8	0,335	4 300	**SYK 25 TR**
30	40	25	38,1	82	42,9	19	121	159	21,5	14,5	12	22,2	19,5	11,2	0,475	6 300	**SYK 30 TF**
	40	25	38,1	82	42,9	19	121	159	21,5	14,5	12	22,2	19,5	11,2	0,475	3 800	**SYK 30 TR**
35	45	27	42,9	93	47,6	19	126	164	21,5	14,5	12	25,4	25,5	15,3	0,655	5 300	**SYK 35 TF**
	45	27	42,9	93	47,6	19	126	164	21,5	14,5	12	25,4	25,5	15,3	0,655	3 200	**SYK 35 TR**
40	48	30	49,2	99	49,2	19	136	176	21,5	14,5	12	30,2	30,7	19	0,8	4 800	**SYK 40 TF**
	48	30	49,2	99	49,2	19	136	176	21,5	14,5	12	30,2	30,7	19	0,8	2 800	**SYK 40 TR**

rgab.ru Берг АБ bergab@ya.ru Тел. (495)-228-06-21, факс (495) 22

rgab.ru Берг АБ bergab@ya.ru Тел. (495)-228-06-21, факс (495) 22

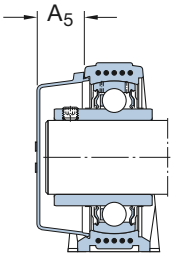

Designations Complete unit	Separate components Bearing	Housing	**Mass** Complete unit	**Appropriate end cover** Designation	Dimension A_5
–			kg	–	mm
SYK 20 TF	YAR 204-2F	SYK 504	0,24	ECY 204	18,5
SYK 20 TR	YAR 204-2RF	SYK 504	0,24	ECY 204	18,5
SYK 25 TF	YAR 205-2F	SYK 505	0,29	ECY 205	18
SYK 25 TR	YAR 205-2RF	SYK 505	0,29	ECY 205	18
SYK 30 TF	YAR 206-2F	SYK 506	0,49	ECY 206	20
SYK 30 TR	YAR 206-2RF	SYK 506	0,49	ECY 206	20
SYK 35 TF	YAR 207-2F	SYK 507	0,66	ECY 207	22
SYK 35 TR	YAR 207-2RF	SYK 507	0,66	ECY 207	22
SYK 40 TF	YAR 208-2F	SYK 508	0,86	ECY 208	23,5
SYK 40 TR	YAR 208-2RF	SYK 508	0,86	ECY 208	23,5

rgab.ru Берг АБ bergab@ya.ru Тел. (495)-228-06-21, факс (495) 22

rgab.ru Берг АБ bergab@ya.ru Тел. (495)-228-06-21, факс (495) 22

Y-TECH plummer block units
with grub screws and food-grade grease
d **20 – 40** mm

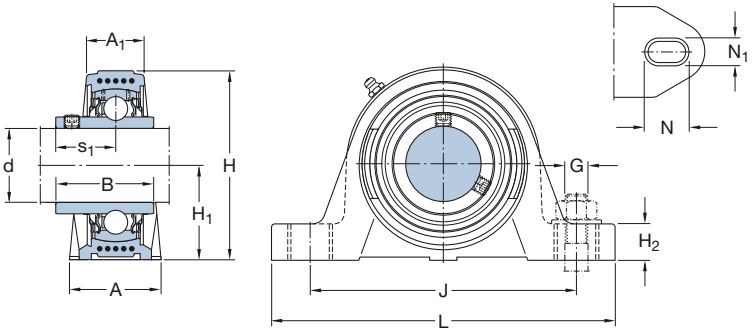

Dimensions													Basic load ratings dynamic		Fatigue load static	Limiting speed limit	Designation Complete unit with shaft
d	A	A_1	B	H	H_1	H_2	J	L	N	N_1	G	s_1	C	C_0	P_u	tolerance h6	
mm													kN		kN	r/min	–
20	32	21	31	64	33,3	16	96	126	17,5	12	10	18,3	10,8	6,55	0,28	5 000	**SYKC 20 NTH**
25	32	22	34,1	70,5	36,5	16	105	134	17,5	12	10	19,8	11,9	7,8	0,335	4 300	**SYKC 25 NTH**
30	40	25	38,1	82	42,9	19	121	159	21,5	14,5	12	22,2	16,3	11,2	0,475	3 800	**SYKC 30 NTH**
35	45	27	42,9	93	47,6	19	126	164	21,5	14,5	12	25,4	21,6	15,3	0,655	3 200	**SYKC 35 NTH**
40	48	30	49,2	99	49,2	19	136	176	21,5	14,5	12	30,2	24,7	19	0,8	2 800	**SYKC 40 NTH**

rgab.ru Берг АБ bergab@ya.ru Тел. (495)-228-06-21, факс (495) 22

rgab.ru Берг АБ bergab@ya.ru Тел. (495)-228-06-21, факс (495) 22

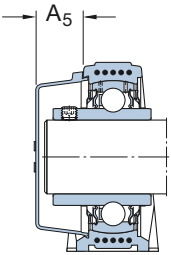

Designations Complete unit	Separate components Bearing	Housing	**Mass** Complete unit	**Appropriate end cover** Designation	Dimension A_5
–			kg	–	mm
SYKC 20 NTH	YAR 204-2RF/HV	SYKC 504 N	0,24	ECY 204	18,5
SYKC 25 NTH	YAR 205-2RF/HV	SYKC 505 N	0,29	ECY 205	18
SYKC 30 NTH	YAR 206-2RF/HV	SYKC 506 N	0,49	ECY 206	20
SYKC 35 NTH	YAR 207-2RF/HV	SYKC 507 N	0,66	ECY 207	22
SYKC 40 NTH	YAR 208-2RF/HV	SYKC 508 N	0,86	ECY 208	23,5

rgab.ru Берг АБ bergab@ya.ru Тел. (495)-228-06-21, факс (495) 22

rgab.ru Берг АБ bergab@ya.ru Тел. (495)-228-06-21, факс (495) 22

Y-bearing pillow block units with a cast housing and grub screws

d **12 – 40** mm
3/4 – 1 1/2 in

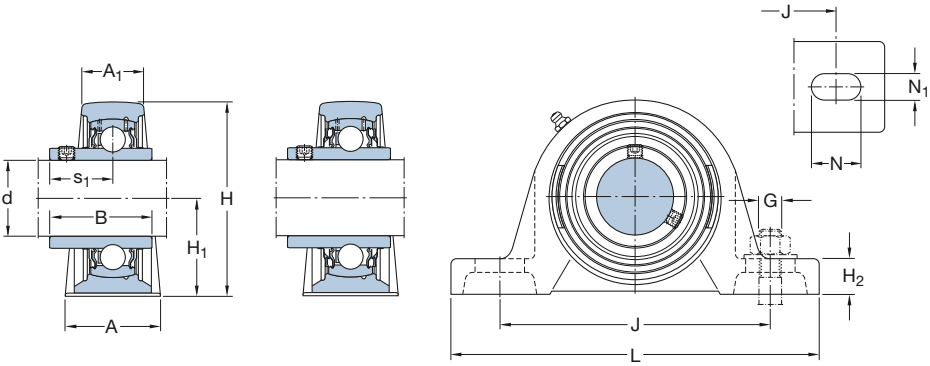

TF TR

Dimensions													Basic laod ratings		Fatigue load limit	Limiting speed	Designation
													dynamic	static		with shaft tolerance h6	Complete unit
d	A	A_1	B	H	H_1	H_2	J	L	N	N_1	G	s_1	C	C_0	P_u		
mm/in													kN		kN	r/min	–
12	32	18	27,4	57	30,2	14	97	127	20,5	11,5	10	15,9	9,56	4,75	0,2	9 500	**SY 12 TF**
15	32	18	27,4	57	30,2	14	97	127	20,5	11,5	10	15,9	9,56	4,75	0,2	9 500	**SY 15 TF**
17	32	18	27,4	57	30,2	14	97	127	20,5	11,5	10	15,9	9,56	4,75	0,2	9 500	**SY 17 TF**
3/4	32	21	31	65	33,3	14	97	127	20,5	11,5	10	18,3	12,7	6,55	0,28	8 500	**SY 3/4 TF**
	34	23	31	65	33,3	14	97	127	20,7	13	10	18,3	12,7	6,55	0,28	8 500	**SYJ 3/4 TF**
20	32	21	31	65	33,3	14	97	127	20,5	11,5	10	18,3	12,7	6,55	0,28	8 500	**SY 20 TF**
	34	23	31	65	33,3	14	97	127	20,7	13	10	18,3	12,7	6,55	0,28	8 500	**SYJ 20 TF**
	32	21	31	65	33,3	14	97	127	20,5	11,5	10	18,3	12,7	6,55	0,28	5 000	**SY 20 TR**
25	36	22	34,1	70,5	36,5	16	102	130	19,5	11,5	10	19,8	14	7,8	0,335	7 000	**SY 25 TF**
	38	24	34,1	70,5	36,5	16	102,5	140	21,5	13	10	19,8	14	7,8	0,335	7 000	**SYJ 25 TF**
	36	22	34,1	70,5	36,5	16	102	130	19,5	11,5	10	19,8	14	7,8	0,335	4 300	**SY 25 TR**
1	36	22	34,1	70,5	36,5	16	102	130	19,5	11,5	10	19,8	14	7,8	0,335	7 000	**SY 1. TF**
	38	24	34,1	70,5	36,5	16	102,5	140	21,5	13	10	19,8	14	7,8	0,335	7 000	**SYJ 1. TF**
	36	22	34,1	70,5	36,5	16	102	130	19,5	11,5	10	19,8	14	7,8	0,335	4 300	**SY 1. TR**
30	40	25	38,1	82,5	42,9	17	117,5	152	23,5	14	12	22,2	19,5	11,2	0,475	6 300	**SY 30 TF**
	42	27	38,1	82,5	42,9	16	118	165	24	17	14	22,2	19,5	11,2	0,475	6 300	**SYJ 30 TF**
	40	25	38,1	82,5	42,9	17	117,5	152	23,5	14	12	22,2	19,5	11,2	0,475	3 800	**SY 30 TR**
1 1/4	45	27	42,9	93	47,6	19	126	160	21	14	12	25,4	25,5	15,3	0,655	5 300	**SY 1.1/4 TF**
	46	28	42,9	93	47,6	17	129	167	24	17	14	25,4	25,5	15,3	0,655	5 300	**SYJ 1.1/4 TF**
	45	27	42,9	93	47,6	19	126	160	21	14	12	25,4	25,5	15,3	0,655	3 200	**SY 1.1/4 TR**
35	45	27	42,9	93	47,6	19	126	160	21	14	12	25,4	25,5	15,3	0,655	5 300	**SY 35 TF**
	46	28	42,9	93	47,6	17	129	167	24	17	14	25,4	25,5	15,3	0,655	5 300	**SYJ 35 TF**
	45	27	42,9	93	47,6	19	126	160	21	14	12	25,4	25,5	15,3	0,655	3 200	**SY 35 TR**
1 1/2	48	30	49,2	99	49,2	19	135,5	175	24,5	14	12	30,2	30,7	19	0,8	4 800	**SY 1.1/2 TF**
	49	31	49,2	99	49,2	18	136,5	184	25,5	17	14	30,2	30,7	19	0,8	4 800	**SYJ 1.1/2 TF**
	48	30	49,2	99	49,2	19	135,5	175	24,5	14	12	30,2	30,7	19	0,8	2 800	**SY 1.1/2 TR**
40	48	30	49,2	99	49,2	19	135,5	175	24,5	14	12	30,2	30,7	19	0,8	4 800	**SY 40 TF**
	49	31	49,2	99	49,2	18	136,5	184	25,5	17	14	30,2	30,7	19	0,8	4 800	**SYJ 40 TF**
	48	30	49,2	99	49,2	19	135,5	175	24,5	14	12	30,2	30,7	19	0,8	2 800	**SY 40 TR**

rgab.ru Берг АБ bergab@ya.ru Тел. (495)-228-06-21, факс (495) 22

rgab.ru Берг АБ bergab@ya.ru Тел. (495)-228-06-21, факс (495) 22

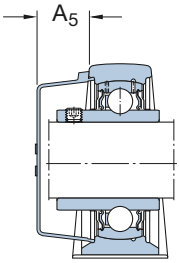

Designations Complete unit	Separate components Bearing	Housing	**Mass** Complete unit	**Appropriate end cover** Designation	Dimension A_5
–			kg	–	mm
SY 12 TF	YAR 203/12-2F	SY 503 M	0,52	–	–
SY 15 TF	YAR 203/15-2F	SY 503 M	0,51	–	–
SY 17 TF	YAR 203-2F	SY 503 M	0,50	–	–
SY 3/4 TF	YAR 204-012-2F	SY 504 M	0,56	ECY 204	18,5
SYJ 3/4 TF	YAR 204-012-2F	SYJ 504	0,54	–	–
SY 20 TF	YAR 204-2F	SY 504 M	0,57	ECY 204	18,5
SYJ 20 TF	YAR 204-2F	SYJ 504	0,55	–	–
SY 20 TR	YAR 204-2RF	SY 504 M	0,57	ECY 204	18,5
SY 25 TF	YAR 205-2F	SY 505 M	0,72	ECY 205	18
SYJ 25 TF	YAR 205-2F	SYJ 505	0,73	–	–
SY 25 TR	YAR 205-2RF	SY 505 M	0,72	ECY 205	18
SY 1. TF	YAR 205-100-2F	SY 505 M	0,71	ECY 205	18
SYJ 1. TF	YAR 205-100-2F	SYJ 505	0,72	–	–
SY 1. TR	YAR 205-100-2RF	SY 505 M	0,71	ECY 205	18
SY 30 TF	YAR 206-2F	SY 506 M	1,10	ECY 206	20
SYJ 30 TF	YAR 206-2F	SYJ 506	1,05	–	–
SY 30 TR	YAR 206-2RF	SY 506 M	1,10	ECY 206	20
SY 1.1/4 TF	YAR 207-104-2F	SY 507 M	1,51	ECY 207	22
SYJ 1.1/4 TF	YAR 207-104-2F	SYJ 507	1,56	–	–
SY 1.1/4 TR	YAR 207-104-2RF	SY 507 M	1,51	ECY 207	22
SY 35 TF	YAR 207-2F	SY 507 M	1,45	ECY 207	22
SYJ 35 TF	YAR 207-2F	SYJ 507	1,50	–	–
SY 35 TR	YAR 207-2RF	SY 507 M	1,45	ECY 207	22
SY 1.1/2 TF	YAR 208-108-2F	SY 508 M	1,85	ECY 208	23,5
SYJ 1.1/2 TF	YAR 208-108-2F	SYJ 508	1,90	–	–
SY 1.1/2 TR	YAR 208-108-2RF	SY 508 M	1,85	ECY 208	23,5
SY 40 TF	YAR 208-2F	SY 508 M	1,80	ECY 208	23,5
SYJ 40 TF	YAR 208-2F	SYJ 508	1,85	–	–
SY 40 TR	YAR 208-2RF	SY 508 M	1,80	ECY 208	23,5

rgab.ru Берг АБ bergab@ya.ru Тел. (495)-228-06-21, факс (495) 22

rgab.ru Берг АБ bergab@ya.ru Тел. (495)-228-06-21, факс (495) 22

Y-bearing pillow block units with a cast housing and grub screws

d **45 – 100** mm
1 3/4 – 2 1/2 in

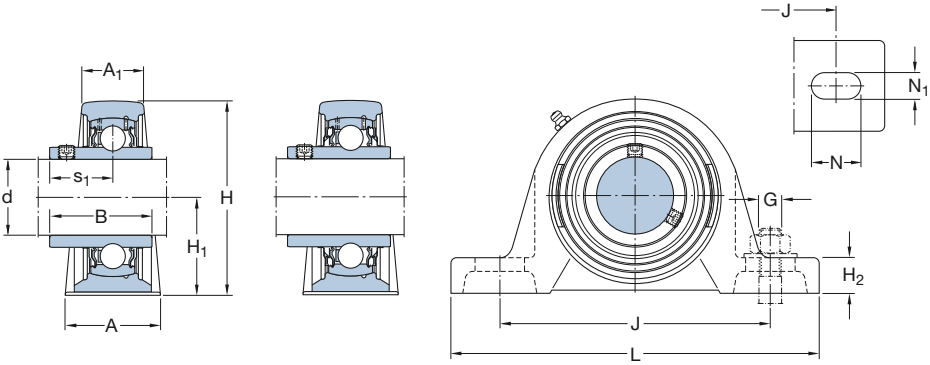

TF TR

Dimensions d	A	A_1	B	H	H_1	H_2	J	L	N	N_1	G	s_1	Basic load ratings dynamic C	static C_0	Fatigue load limit P_u	Limiting speed with shaft tolerance h6	Designation Complete unit
mm/in													kN		kN	r/min	–
1 3/4	48	32	49,2	107,5	54	21	143,5	187	22,5	14	12	30,2	33,2	21,6	0,915	4 300	**SY 1.3/4 TF**
	52	36	49,2	107,5	54	20	143,5	190	23,5	17	14	30,2	33,2	21,6	0,915	4 300	**SYJ 1.3/4 TF**
45	48	32	49,2	107,5	54	21	143,5	187	22,5	14	12	30,2	33,2	21,6	0,915	4 300	**SY 45 TF**
	52	36	49,2	107,5	54	20	143,5	190	23,5	17	14	30,2	33,2	21,6	0,915	4 300	**SYJ 45 TF**
	48	32	49,2	107,5	54	21	143,5	187	22,5	14	12	30,2	33,2	21,6	0,915	2 400	**SY 45 TR**
50	54	34	51,6	114,5	57,2	22	157	203	26	18	16	32,6	35,1	23,2	0,98	4 000	**SY 50 TF**
	58	38	51,6	114,5	57,2	22	157,5	206	26,5	20	16	32,6	35,1	23,2	0,98	4 000	**SYJ 50 TF**
	54	34	51,6	114,5	57,2	22	157	203	26	18	16	32,6	35,1	23,2	0,98	2 200	**SY 50 TR**
2	60	40	55,6	126	63,5	24	171,5	219	27,5	18	16	33,4	43,6	29	1,25	3 600	**SY 2. TF**
	60	40	55,6	126	63,5	24	171,5	219	27,5	20	16	33,4	43,6	29	1,25	3 600	**SYJ 2. TF**
55	60	40	55,6	126	63,5	24	171,5	219	27,5	18	16	33,4	43,6	29	1,25	3 600	**SY 55 TF**
	60	40	55,6	126	63,5	24	171,5	219	27,5	20	16	33,4	43,6	29	1,25	3 600	**SYJ 55 TF**
	60	40	55,6	126	63,5	24	171,5	219	27,5	18	16	33,4	43,6	29	1,25	1 900	**SY 55 TR**
60	60	42	65,1	138	69,8	26,5	190,5	240	29,5	18	16	39,7	52,7	36	1,53	3 400	**SY 60 TF**
	65	47	65,1	138	69,8	26,5	188,5	241	29,5	20	16	39,7	52,7	36	1 53	3 400	**SYJ 60 TF**
	60	42	65,1	138	69,8	26,5	190,5	240	29,5	18	16	39,7	52,7	36	1,53	1 800	**SY 60 TR**
2 1/2	65	44	68,3	151	76,2	29	203	257	35	22	20	42,9	57,2	40	1,7	3 000	**SY 2.1/2 TF**
	70	49	68,3	151	76,2	27	203	265	35	25	20	42,9	57,2	40	1,7	3 000	**SYJ 2.1/2 TF**
65	65	44	68,3	151	76,2	29	203	257	35	22	20	42,9	57,2	40	1,7	3 000	**SY 65 TF**
	70	49	68,3	151	76,2	27	203	265	35	25	20	42,9	57,2	40	1,7	3 000	**SYJ 65 TF**
70	72	46	69,9	156	79,4	27	210	266	30	25	20	39,7	62,4	45	1,86	2 800	**SYJ 70 TF**
75	74	54	73,1	166	82,5	28	217	275	30	25	20	46,1	66,3	49	2,04	2 600	**SYJ 75 TF**
80	78	50	77,9	176	88,9	30	232	292	35	25	20	47,7	72,8	53	2,16	2 400	**SYJ 80 TF**
90	88	54	89	201	101,6	33	262	327	35	27	22	54	95,6	72	2,7	2 000	**SYJ 90 TF**
100	95	57	98,4	226	115	38	308	380	48	26	24	63,4	124	93	3,35	1 900	**SYJ 100 TF**

rgab.ru Берг АБ bergab@ya.ru Тел. (495)-228-06-21, факс (495) 22

rgab.ru Берг АБ bergab@ya.ru Тел. (495)-228-06-21, факс (495) 22

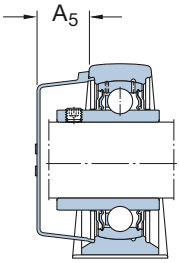

Designations Complete unit	Separate components Bearing	Housing	Mass Complete unit	Appropriate end cover Designation	Dimension A_5
–			kg	–	mm
SY 1.3/4 TF	YAR 209-112-2F	SY 509 M	2,20	ECY 209	23
SYJ 1.3/4 TF	YAR 209-112-2F	SYJ 509	2,40	–	–
SY 45 TF	YAR 209-2F	SY 509 M	2,20	ECY 209	23
SYJ 45 TF	YAR 209-2F	SYJ 509	2,40	–	–
SY 45 TR	YAR 209-2RF	SY 509 M	2,20	ECY 209	23
SY 50 TF	YAR 210-2F	SY 510 M	2,70	ECY 210	29,5
SYJ 50 TF	YAR 210-2F	SYJ 510	2,95	–	–
SY 50 TR	YAR 210-2RF	SY 510 M	2,70	ECY 210	29,5
SY 2. TF	YAR 211-200-2F	SY 511 M	3,75	ECY 211	34
SYJ 2. TF	YAR 211-200-2F	SYJ 511	3,85	–	–
SY 55 TF	YAR 211-2F	SY 511 M	3,60	ECY 211	34
SYJ 55 TF	YAR 211-2F	SYJ 511	3,70	–	–
SY 55 TR	YAR 211-2RF	SY 511 M	3,60	ECY 211	34
SY 60 TF	YAR 212-2F	SY 512 M	4,45	ECY 212	35,5
SYJ 60 TF	YAR 212-2F	SYJ 512	4,85	–	–
SY 60 TR	YAR 212-2RF	SY 512 M	4,45	ECY 212	35,5
SY 2.1/2 TF	YAR 213-208-2F	SY 513 M	5,80	ECY 213	35,5
SYJ 2.1/2 TF	YAR 213-208-2F	SYJ 513	6,25	–	–
SY 65 TF	YAR 213-2F	SY 513 M	5,70	ECY 213	35,5
SYJ 65 TF	YAR 213-2F	SYJ 513	6,15	–	–
SYJ 70 TF	YAR 214-2F	SYJ 514	6,20	–	–
SYJ 75 TF	YAR 215-2F	SYJ 515	7,30	–	–
SYJ 80 TF	YAR 216-2F	SYJ 516	9,70	–	–
SYJ 90 TF	YAR 218-2F	SYJ 518	14,0	–	–
SYJ 100 TF	YAR 220-2F	SYJ 520	19,0	–	–

rgab.ru Берг АБ bergab@ya.ru Тел. (495)-228-06-21, факс (495) 22

rgab.ru Берг АБ bergab@ya.ru Тел. (495)-228-06-21, факс (495) 22

Y-bearing pillow block units with a cast housing and an eccentric locking collar

d **15 – 60** mm

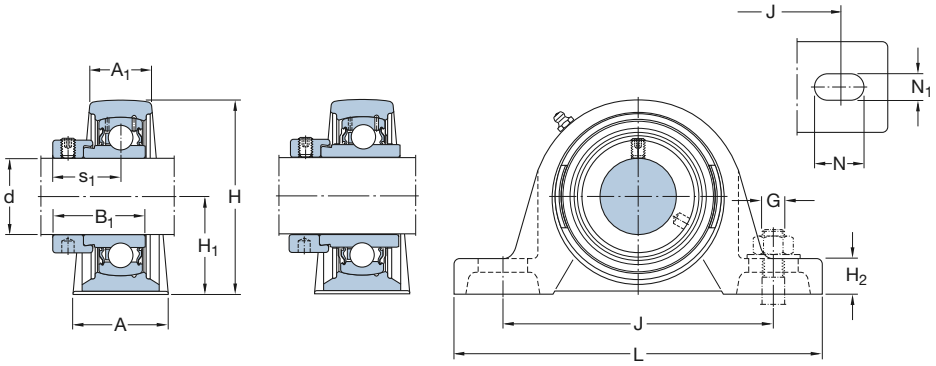

FM WF

Dimensions													Basic load ratings		Fatigue load limit	Limiting speed	Designation
													dynamic	static		with shaft tolerance h6	Complete unit
d	A	A_1	B_1	H	H_1	H_2	J	L	N	N_1	G	s_1	C	C_0	P_u		
mm													kN		kN	r/min	–
15	32	18	28,6	57	30,2	14	97	127	20,5	11,5	10	22,1	9,56	4,75	0,2	9 500	**SY 15 FM**
17	32	18	28,6	57	30,2	14	97	127	20,5	11,5	10	22,1	9,56	4,75	0,2	9 500	**SY 17 FM**
20	32	21	31	65	33,3	14	97	127	20,5	11,5	10	23,5	12,7	6,55	0,28	8 500	**SY 20 FM**
	32	21	43,7	65	33,3	14	97	127	20,5	11,5	10	26,6	12,7	6,55	0,28	8 500	**SY 20 WF**
25	36	22	31	70,5	36,5	16	102	130	19,5	11,5	10	23,5	14	7,8	0,335	7 000	**SY 25 FM**
	36	22	43,7	70,5	36,5	16	102	130	19,5	11,5	10	26,9	14	7 8	0,335	7 000	**SY 25 WF**
30	40	25	35,7	82,5	42,9	17	117,5	152	23,5	14	12	26,7	19,5	11,2	0,475	6 300	**SY 30 FM**
	40	25	48,4	82,5	42,9	17	117,5	152	23,5	14	12	30,1	19,5	11,2	0,475	6 300	**SY 30 WF**
35	45	27	38,9	93	47,6	19	126	160	21	14	12	29,4	25,5	15,3	0,655	5 300	**SY 35 FM**
	45	27	51,1	93	47,6	19	126	160	21	14	12	32,3	25,5	15,3	0,655	5 300	**SY 35 WF**
40	48	30	43,7	99	49,2	19	135,5	175	24,5	14	12	32,7	30,7	19	0,8	4 800	**SY 40 FM**
	48	30	56,3	99	49,2	19	135,5	175	24,5	14	12	34,9	30,7	19	0,8	4 800	**SY 40 WF**
45	48	32	43,7	107,5	54	21	143,5	187	22,5	14	12	32,7	33,2	21,6	0,915	4 300	**SY 45 FM**
	48	32	56,3	107,5	54	21	143,5	187	22,5	14	12	34,9	33,2	21,6	0,915	4 300	**SY 45 WF**
50	54	34	43,7	114,5	57,2	22	157	203	26	18	16	32,7	35,1	23,2	0,98	4 000	**SY 50 FM**
	54	34	62,7	114,5	57,2	22	157	203	26	18	16	38,1	35,1	23,2	0,98	4 000	**SY 50 WF**
55	60	40	48,4	126	63,5	24	171,5	219	27,5	18	16	36,4	43,6	29	1,25	3 600	**SY 55 FM**
	60	40	71,4	126	63,5	24	171,5	219	27,5	18	16	43,6	43,6	29	1,25	3 600	**SY 55 WF**
60	60	42	53,1	138	69,9	26,5	190,5	240	29,5	18	16	39,6	52,7	36	1,53	3 400	**SY 60 FM**
	60	42	77,8	138	69,9	26,5	190,5	240	29,5	18	16	46,8	52,7	36	1,53	3 400	**SY 60 WF**

rgab.ru Берг АБ bergab@ya.ru Тел. (495)-228-06-21, факс (495) 22

rgab.ru Берг АБ bergab@ya.ru Тел. (495)-228-06-21, факс (495) 22

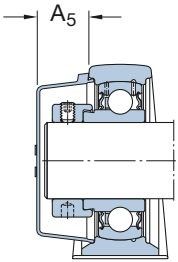

Designations Complete unit	Separate components Bearing	Housing	**Mass** Complete unit	**Appropriate end cover** Designation	Dimension A_5
–			kg	–	mm
SY 15 FM	YET 203/15	SY 503 M	0,53	–	–
SY 17 FM	YET 203	SY 503 M	0,52	–	–
SY 20 FM	YET 204	SY 504 M	0,59	ECY 204	18,5
SY 20 WF	YEL 204-2F	SY 504 M	0,62	ECY 204	18,5
SY 25 FM	YET 205	SY 505 M	0,73	ECY 205	18
SY 25 WF	YEL 205-2F	SY 505 M	0,78	ECY 205	18
SY 30 FM	YET 206	SY 506 M	1,10	ECY 206	20
SY 30 WF	YEL 206-2F	SY 506 M	1,20	ECY 206	20
SY 35 FM	YET 207	SY 507 M	1,55	ECY 207	22
SY 35 WF	YEL 207-2F	SY 507 M	1,60	ECY 207	22
SY 40 FM	YET 208	SY 508 M	1,85	ECY 208	23,5
SY 40 WF	YEL 208-2F	SY 508 M	1,95	ECY 208	23,5
SY 45 FM	YET 209	SY 509 M	2,25	ECY 209	23
SY 45 WF	YEL 209-2F	SY 509 M	2,35	ECY 209	23
SY 50 FM	YET 210	SY 510 M	2,75	ECY 210	29,5
SY 50 WF	YEL 210-2F	SY 510 M	2,90	ECY 210	29,5
SY 55 FM	YET 211	SY 511 M	3,65	ECY 211	34
SY 55 WF	YEL 211-2F	SY 511 M	3,90	ECY 211	34
SY 60 FM	YET 212	SY 512 M	4,45	ECY 212	35,5
SY 60 WF	YEL 212-2F	SY 512 M	4,75	ECY 212	35,5

rgab.ru Берг АБ bergab@ya.ru Тел. (495)-228-06-21, факс (495) 22

rgab.ru Берг АБ bergab@ya.ru Тел. (495)-228-06-21, факс (495) 22

Y-bearing pillow block units with a cast housing and an adapter sleeve

d **20 – 50** mm
3/4 – 2 in

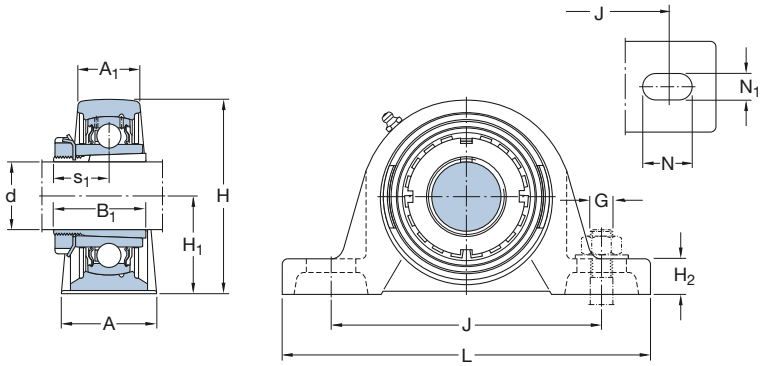

Dimensions													Basic load ratings		Fatigue load limit	Designations[1]	
													dynamic	static		Bearing unit	Adapter sleeve
d	A	A_1	B_1	H	H_1	H_2	J	L	N	N_1	G	s_1	C	C_0	P_u		
mm/in													kN		kN	–	
3/4	38	24	35	70,5	36,5	16	102	140	21,5	13	10	20	14	7,8	0,335	**SYJ 25 KF**	**HE 2305**
20	38	24	35	70,5	36,5	16	102	140	21,5	13	10	20	14	7,8	0,335	**SYJ 25 KF**	**H 2305**
15/16	42	27	38	82,5	42,9	16	118	165	24	17	14	22	19,5	11,2	0,475	**SYJ 30 KF**	**HA 2306**
25	42	27	38	82,5	42,9	16	118	165	24	17	14	22	19,5	11,2	0,475	**SYJ 30 KF**	**H 2306**
1	42	27	38	82,5	42,9	16	118	165	24	17	14	22	19,5	11,2	0,475	**SYJ 30 KF**	**HE 2306**
30	46	28	43	93	47,6	17	129	167	24	17	14	24,3	25,5	15,3	0,655	**SYJ 35 KF**	**H 2307**
1 3/16	46	28	43	93	47,6	17	129	167	24	17	14	24,3	25,5	15,3	0,655	**SYJ 35 KF**	**HA 2307**
1 1/4	49	31	46	99	49,2	18	136,5	184	25,5	17	14	27	30,7	19	0,8	**SYJ 40 KF**	**HE 2308**
35	49	31	46	99	49,2	18	136,5	184	25,5	17	14	27	30,7	19	0,8	**SYJ 40 KF**	**H 2308**
1 7/16	52	36	50	107,5	54	20	143,5	190	23,5	17	14	28,5	33,2	21,6	0,915	**SYJ 45 KF**	**HA 2309**
1 1/2	52	36	50	107,5	54	20	143,5	190	23,5	17	14	28,5	33,2	21,6	0,915	**SYJ 45 KF**	**HE 2309**
40	52	36	50	107,5	54	20	143,5	190	23,5	17	14	28,5	33,2	21,6	0,915	**SYJ 45 KF**	**H 2309**
1 5/8	58	38	55	114,5	57,2	22	157,5	206	26,5	20	16	30,5	35,1	23,2	0,98	**SYJ 50 KF**	**HS 2310**
1 11/16	58	38	55	114,5	57,2	22	157,5	206	26,5	20	16	30,5	35,1	23,2	0,98	**SYJ 50 KF**	**HA 2310**
1 3/4	58	38	55	114,5	57,2	22	157,5	206	26,5	20	16	30,5	35,1	23,2	0,98	**SYJ 50 KF**	**HE 2310**
45	58	38	55	114,5	57,2	22	157,5	206	26,5	20	16	30,5	35,1	23,2	0,98	**SYJ 50 KF**	**H 2310**
1 15/16	60	40	59	126	63,5	24	171,5	219	27,5	20	16	32,5	43,6	29	1,25	**SYJ 55 KF**	**HA 2311**
50	60	40	59	126	63,5	24	171,5	219	27,5	20	16	32,5	43,6	29	1,25	**SYJ 55 KF**	**H 2311**
2	60	40	59	126	63,5	24	171,5	219	27,5	20	16	32,5	43,6	29	1,25	**SYJ 55 KF**	**HE 2311 B**

[1] Bearing unit and sleeve to be ordered separately

rgab.ru Берг АБ bergab@ya.ru Тел. (495)-228-06-21, факс (495) 22

rgab.ru Берг АБ bergab@ya.ru Тел. (495)-228-06-21, факс (495) 22

Designations Bearing unit without adapter sleeve	Separate components Bearing	Housing	**Limiting speed**	**Mass** Bearing unit with adapter sleeve
–			r/min	kg
SYJ 25 KF	YSA 205-2FK	SYJ 505	7 000	0,63
SYJ 25 KF	YSA 205-2FK	SYJ 505	7 000	0,63
SYJ 30 KF	YSA 206-2FK	SYJ 506	6 300	0,90
SYJ 30 KF	YSA 206-2FK	SYJ 506	6 300	0,90
SYJ 30 KF	YSA 206-2FK	SYJ 506	6 300	0,90
SYJ 35 KF	YSA 207-2FK	SYJ 507	5 300	1,25
SYJ 35 KF	YSA 207-2FK	SYJ 507	5 300	1,25
SYJ 40 KF	YSA 208-2FK	SYJ 508	4 800	1,80
SYJ 40 KF	YSA 208-2FK	SYJ 508	4 800	1,80
SYJ 45 KF	YSA 209-2FK	SYJ 509	4 300	2,14
SYJ 45 KF	YSA 209-2FK	SYJ 509	4 300	2,10
SYJ 45 KF	YSA 209-2FK	SYJ 509	4 300	2,10
SYJ 50 KF	YSA 210-2FK	SYJ 510	4 000	2,80
SYJ 50 KF	YSA 210-2FK	SYJ 510	4 000	2,78
SYJ 50 KF	YSA 210-2FK	SYJ 510	4 000	2,75
SYJ 50 KF	YSA 210-2FK	SYJ 510	4 000	2,75
SYJ 55 KF	YSA 211-2FK	SYJ 511	3 600	3,85
SYJ 55 KF	YSA 211-2FK	SYJ 511	3 600	3,85
SYJ 55 KF	YSA 211-2FK	SYJ 511	3 600	3,85

rgab.ru Берг АБ bergab@ya.ru Тел. (495)-228-06-21, факс (495) 22

rgab.ru Берг АБ bergab@ya.ru Тел. (495)-228-06-21, факс (495) 22

Y-bearing pillow block units with a cast housing and an adapter sleeve

d **55 – 60** mm
2 1/8 – 2 3/8 in

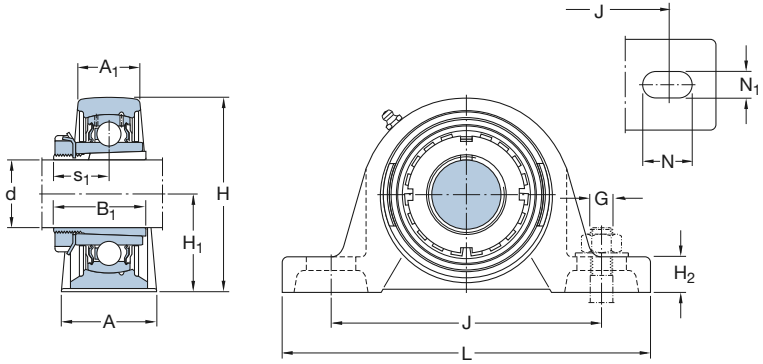

Dimensions													Basic load ratings		Fatigue load limit	Designations[1]	
													dynamic	static		Bearing unit	Adapter sleeve
d	A	A_1	B_1	H	H_1	H_2	J	L	N	N_1	G	s_1	C	C_0	P_u		
mm/in													kN		kN	–	
2 1/8	65	47	62	138	69,8	26,5	188,5	241	29,5	20	16	34,3	52,7	36	1,53	**SYJ 60 KF**	**HS 2312**
55	65	47	62	138	69,8	26,5	188,5	241	29,5	20	16	34,3	52,7	36	1,53	**SYJ 60 KF**	**H 2312**
2 3/16	70	49	65	151	76,2	27	203	265	35	25	20	35,8	57,2	40	1,7	**SYJ 65 KF**	**HA 2313**
2 1/4	70	49	65	151	76,2	27	203	265	35	25	20	35,8	57,2	40	1,7	**SYJ 65 KF**	**HE 2313**
60	70	49	65	151	76,2	27	203	265	35	25	20	35,8	57,2	40	1,7	**SYJ 65 KF**	**H 2313**
2 3/8	70	49	65	151	76,2	27	203	265	35	25	20	35,8	57,2	40	1,7	**SYJ 65 KF**	**HS 2313**

[1] Bearing unit and sleeve to be ordered separately

rgab.ru Берг АБ bergab@ya.ru Тел. (495)-228-06-21, факс (495) 22

rgab.ru Берг АБ bergab@ya.ru Тел. (495)-228-06-21, факс (495) 22

Designations Bearing units without adapter sleeve	Separate components Bearing	Housing	**Limiting speed**	**Mass** Bearing unit with adapter sleeve
–			r/min	kg
SYJ 60 KF	YSA 212-2FK	SYJ 512	3 400	5,00
SYJ 60 KF	YSA 212-2FK	SYJ 512	3 400	5,00
SYJ 65 KF	YSA 213-2FK	SYJ 513	3 000	6,55
SYJ 65 KF	YSA 213-2FK	SYJ 513	3 000	6,45
SYJ 65 KF	YSA 213-2FK	SYJ 513	3 000	6,35
SYJ 65 KF	YSA 213-2FK	SYJ 513	3 000	6,35

rgab.ru Берг АБ bergab@ya.ru Тел. (495)-228-06-21, факс (495) 22

rgab.ru Берг АБ bergab@ya.ru Тел. (495)-228-06-21, факс (495) 22

Y-bearing pillow block units with a shortened (40/45) housing and grub screws

d **20 – 50** mm

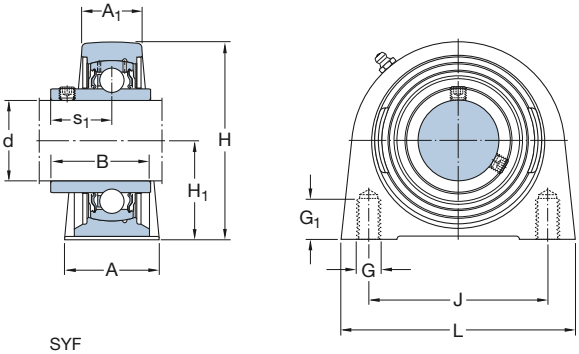

SYF

Dimensions												Basic load ratings		Fatigue load limit	Limiting speed	Designation
												dynamic	static		with shaft tolerance h6	Complete unit
d	A	A_1	B	H	H_1	H_2	J	L	G	G_1	s_1	C	C_0	P_u		
mm												kN		kN	r/min	–
20	32	21	31	65	33,3	–	50,8	65	M 8	14	18,3	12,7	6,55	0,28	8 500	**SYF 20 TF**
	38	24	31	63	30,2	8	52	76	M 10	12	18,3	12,7	6,55	0,28	8 500	**SYFJ 20 TF**
25	36	22	34,1	70,5	36,5	–	50,8	70	M 10	15	19,8	14	7,8	0,335	7 000	**SYF 25 TF**
	38	25	34,1	73	36,5	10	56	84	M 10	15	19,8	14	7,8	0,335	7 000	**SYFJ 25 TF**
30	40	25	38,1	83	42,9	–	76,2	98	M 10	15	22,2	19,5	11,2	0,475	6 300	**SYF 30 TF**
	48	28,5	38,1	85	42,9	10	66	94	M 14	18	22,2	19,5	11,2	0,475	6 300	**SYFJ 30 TF**
35	45	27	42,9	93	47,6	–	82,6	103	M 10	15	25,4	25,5	15,3	0,655	5 300	**SYF 35 TF**
	48	30,5	42,9	96	47,6	12	80	110	M 14	20	25,4	25,5	15,3	0,655	5 300	**SYFJ 35 TF**
40	48	30	49,2	99	49,2	–	88,9	116	M 12	20	30,2	30,7	19	0,8	4 800	**SYF 40 TF**
	54	31,5	49,2	101	49,2	12	84	116	M 14	20	30,2	30,7	19	0,8	4 800	**SYFJ 40 TF**
45	48	32	49,2	107,5	54	–	95,3	120	M 12	22	30,2	33,2	21,6	0,915	4 300	**SYF 45 TF**
	54	33,5	49,2	109	54,2	12	90	120	M 14	25	30,2	33,2	21,6	0,915	4 300	**SYFJ 45 TF**
50	54	34	51,6	114,5	57,2	–	101,6	135	M 16	25,5	32,6	35,1	23,2	0,98	4 000	**SYF 50 TF**
	60	35,5	51,6	117	57,2	14	94	130	M 16	25	32,6	35,1	23,2	0,98	4 000	**SYFJ 50 TF**

rgab.ru Берг АБ bergab@ya.ru Тел. (495)-228-06-21, факс (495) 22

rgab.ru Берг АБ bergab@ya.ru Тел. (495)-228-06-21, факс (495) 22

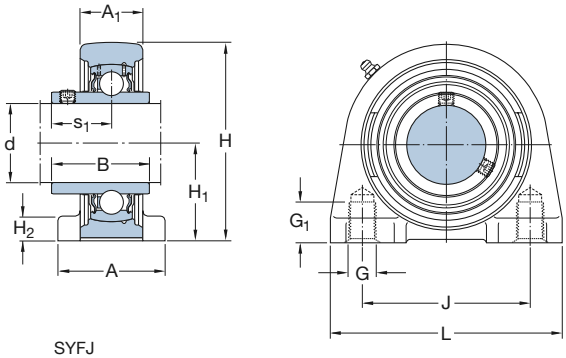

SYFJ

Designation Complete unit	Separate components Bearing	Housing	**Mass** Bearing unit
–			kg
SYF 20 TF	YAR 204-2F	SYF 504	0,43
SYFJ 20 TF	YAR 204-2F	SYFJ 504	0,54
SYF 25 TF	YAR 205-2F	SYF 505	0,52
SYFJ 25 TF	YAR 205-2F	SYFJ 505	0,67
SYF 30 TF	YAR 206-2F	SYF 506	0,90
SYFJ 30 TF	YAR 206-2F	SYFJ 506	1,00
SYF 35 TF	YAR 207-2F	SYF 507	1,20
SYFJ 35 TF	YAR 207-2F	SYFJ 507	1,40
SYF 40 TF	YAR 208-2F	SYF 508	1,50
SYFJ 40 TF	YAR 208-2F	SYFJ 508	1,60
SYF 45 TF	YAR 209-2F	SYF 509	1,80
SYFJ 45 TF	YAR 209-2F	SYFJ 509	1,85
SYF 50 TF	YAR 210-2F	SYF 510	2,20
SYFJ 50 TF	YAR 210-2F	SYFJ 510	2,30

rgab.ru Берг АБ bergab@ya.ru Тел. (495)-228-06-21, факс (495) 22

rgab.ru Берг АБ bergab@ya.ru Тел. (495)-228-06-21, факс (495) 22

Y-bearing pillow block units with a shortened (40/5) housing and an eccentric locking collar

d **20 – 50** mm

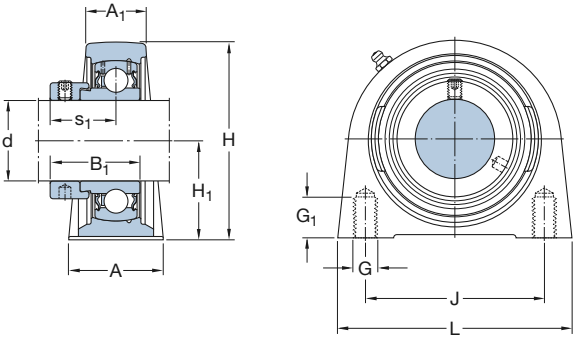

Dimensions											Basic load ratings		Fatigue load limit	Limiting speed	Designation
											dynamic	static		with shaft tolerance h6	Complete unit
d	A	A_1	B_1	H	H_1	J	L	G	G_1	s_1	C	C_0	P_u		
mm											kN		kN	r/min	–
20	32	21	31	65	33,3	50,8	65	M 8	14	23,5	12,7	6,55	0,28	8 500	**SYF 20 FM**
25	36	22	31	70,5	36,5	50,8	70	M 10	15	23,5	14	7,8	0,335	7 000	**SYF 25 FM**
30	40	25	35,7	83	42,9	76,2	98	M 10	15	26,7	19,5	11,2	0,475	6 300	**SYF 30 FM**
35	45	27	38,9	93	47,6	82,6	103	M 10	15	29,4	25,5	15,3	0,655	5 300	**SYF 35 FM**
40	48	30	43,7	99	49,2	88,9	116	M 12	20	32,7	30,7	19	0,8	4 800	**SYF 40 FM**
45	48	32	43,7	107,5	54	95,3	120	M 12	22	32,7	33,2	21,6	0,915	4 300	**SYF 45 FM**
50	54	34	43,7	114,5	57,2	101,6	135	M 16	25,5	32,7	35,1	23,2	0,98	4 000	**SYF 50 FM**

SKF
rgab.ru Берг АБ bergab@ya.ru Тел. (495)-228-06-21, факс (495) 22

rgab.ru Берг АБ bergab@ya.ru Тел. (495)-228-06-21, факс (495) 22

Designations Complete unit	Separate components Bearing	Housing	**Mass** Bearing unit
–			kg
SYF 20 FM	YET 204	SYF 504	0,43
SYF 25 FM	YET 205	SYF 505	0,52
SYF 30 FM	YET 206	SYF 506	0,90
SYF 35 FM	YET 207	SYF 507	1,20
SYF 40 FM	YET 208	SYF 508	1,50
SYF 45 FM	YET 209	SYF 509	1,80
SYF 50 FM	YET 210	SYF 510	2,20

rgab.ru Берг АБ bergab@ya.ru Тел. (495)-228-06-21, факс (495) 22

rgab.ru Берг АБ bergab@ya.ru Тел. (495)-228-06-21, факс (495) 22

Y-bearing pillow block units with a pressed steel housing and grub screws

d **12 – 30** mm
3/4 – 1 1/4 in

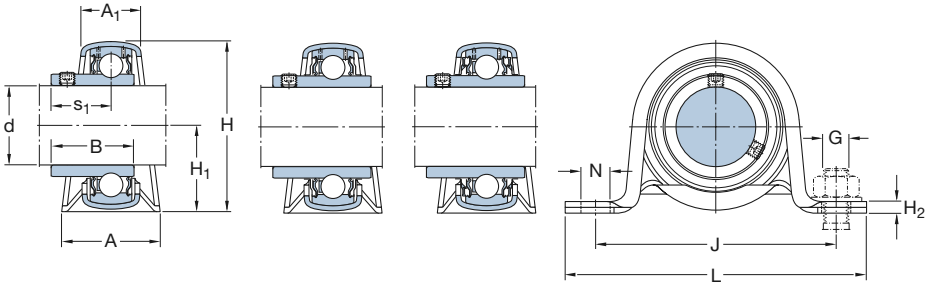

P + YAT P + YAR-2F P + YAR-2RF

Dimensions												Basic load ratings		Fatigue load limit	Permissible housing load	Designation
												dynamic	static		radial	No order designation
d	A	A_1	B	H	H_1	H_2	J	L	N	G	s_1	C	C_0	P_u		
mm/in												kN		kN	kN	–
12	26	18	27,4	44	22	3	68	86	9,6	8	15,9	9,56	4,75	0,2	1,25	P 12 TF
	32	21	27,4	50	25,2	3	76	99	9,6	8	15,9	9,56	4,75	0,2	1,7	P 47 R-12 TF
15	26	18	27,4	44	22	3	68	86	9,6	8	15,9	9,56	4,75	0,2	1,25	P 15 TF
	32	21	27,4	50	25,2	3	76	99	9,6	8	15,9	9,56	4,75	0,2	1,7	P 47 R-15 TF
17	26	18	22,1	44	22	3	68	86	9,6	8	15,9	9,56	4,75	0,2	1,25	P 17 RM
	26	18	27,4	44	22	3	68	86	9,6	8	15,9	9,56	4,75	0,2	1,25	P 17 TF
	32	21	22,1	50	25,2	3	76	99	9,6	8	15,9	9,56	4,75	0,2	1,7	P 47 R-17 RM
	32	21	27,4	50	25,2	3	76	99	9,6	8	15,9	9,56	4,75	0,2	1,7	P 47 R-17 TF
3/4	32	21	31	50	25,2	3	76	99	9,6	8	18,3	12,7	6,55	0,28	1,7	P 3/4 TF
	32	21	31	50	25,2	3	76	99	9,6	8	18,3	12,7	6,55	0,28	1,7	P 3/4 TR
	32	24	31	56	28,3	3,2	86	108	11,2	10	18,3	12,7	6,55	0,28	1,8	P 52 R-3/4 TF
20	32	21	25,5	50	25,2	3	76	99	9,6	8	18,3	12,7	6,55	0,28	1,7	P 20 RM
	32	21	31	50	25,2	3	76	99	9,6	8	18,3	12,7	6,55	0,28	1,7	P 20 TF
	32	21	31	50	25,2	3	76	99	9,6	8	18,3	12,7	6,55	0,28	1,7	P 20 TR
	32	24	25,5	56	28,3	3,2	86	108	11,2	10	18,3	12,7	6,55	0,28	1,8	P 52 R-20 RM
	32	24	31	56	28,3	3,2	86	108	11,2	10	18,3	12,7	6,55	0,28	1,8	P 52 R-20 TF
25	32	24	27,2	56	28,3	3,2	86	108	11,2	10	19,5	14	7,8	0,335	1,8	P 25 RM
	32	24	34,1	56	28,3	3,2	86	108	11,2	10	19,8	14	7,8	0,335	1,8	P 25 TF
	32	24	34,1	56	28,3	3,2	86	108	11,2	10	19,8	14	7,8	0,335	1,8	P 25 TR
	38	25	27,2	66	32,9	4	95	119	11,2	10	19,5	14	7,8	0,335	2,6	P 62 R-25 RM
	38	25	34,1	66	32,9	4	95	119	11,2	10	19,8	14	7,8	0,335	2,6	P 62 R-25 TF
1	32	24	34,1	56	28,3	3,2	86	108	11,2	10	19,8	14	7,8	0,335	1,8	P 1. TF
	32	24	34,1	56	28,3	3,2	86	108	11,2	10	19,8	14	7,8	0,335	1,8	P 1. TR
	38	25	34,1	66	32,9	4	95	119	11,2	10	19,8	14	7,8	0,335	2,6	P 62 R-1. TF
30	38	25	30,2	66	32,9	4	95	119	11,2	10	21	19,5	11,2	0,475	2,6	P 30 RM
	38	25	38,1	66	32,9	4	95	119	11,2	10	22,2	19,5	11,2	0,475	2,6	P 30 TF
	38	25	38,1	66	32,9	4	95	119	11,2	10	22,2	19,5	11,2	0,475	2,6	P 30 TR
	41	27	30,2	78	39,2	5	106	130	11,2	10	21	19,5	11,2	0,475	3,3	P 72 R-30 RM
	41	27	38,1	78	39,2	5	106	130	11,2	10	22,2	19,5	11,2	0,475	3,3	P 72 R-30 TF
1 1/4	41	27	42,9	78	39,2	5	106	130	11,2	10	25,4	25,5	15,3	0,655	3,3	P 1.1/4 TF
	41	27	42,9	78	39,2	5	106	130	11,2	10	25,4	25,5	15,3	0,655	3,3	P 1.1/4 TR
	43	29	42,9	86	43,5	5	120	148	14	12	25,4	25,5	15,3	0,655	3,8	P 80 R-1.1/4 TF

SKF
rgab.ru Берг АБ bergab@ya.ru Тел. (495)-228-06-21, факс (495) 22

rgab.ru Берг АБ bergab@ya.ru Тел. (495)-228-06-21, факс (495) 22

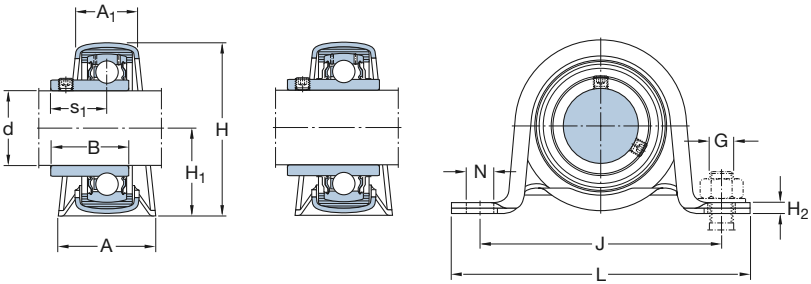

P + RIS + YAT

P + RIS + YAR-2F

Bearing unit No order designation	**Order designations** **Housing**	**Bearing**	**Rubber seating ring**	**Mass** Bearing unit
–	–			kg
P 12 TF	**P 40**	**YAR 203/12-2F**	**–**	0,18
P 47 R-12 TF	**P 47**	**YAR 203/12-2F**	**RIS 203**	0,22
P 15 TF	**P 40**	**YAR 203/15-2F**	**–**	0,17
P 47 R-15 TF	**P 47**	**YAR 203/15-2F**	**RIS 203**	0,21
P 17 RM	**P 40**	**YAT 203**	**–**	0,15
P 17 TF	**P 40**	**YAR 203-2F**	**–**	0,16
P 47 R-17 RM	**P 47**	**YAT 203**	**RIS 203**	0,19
P 47 R-17 TF	**P 47**	**YAR 203-2F**	**RIS 203**	0,20
P 3/4 TF	**P 47**	**YAR 204-012-2F**	**–**	0,23
P 3/4 TR	**P 47**	**YAR 204-012-2RF**	**–**	0,23
P 52 R-3/4 TF	**P 52**	**YAR 204-012-2F**	**RIS 204**	0,27
P 20 RM	**P 47**	**YAT 204**	**–**	0,19
P 20 TF	**P 47**	**YAR 204-2F**	**–**	0,22
P 20 TR	**P 47**	**YAR 204-2RF**	**–**	0,22
P 52 R-20 RM	**P 52**	**YAT 204**	**RIS 204**	0,23
P 52 R-20 TF	**P 52**	**YAR 204-2F**	**RIS 204**	0,26
P 25 RM	**P 52**	**YAT 205**	**–**	0,24
P 25 TF	**P 52**	**YAR 205-2F**	**–**	0,27
P 25 TR	**P 52**	**YAR 205-2RF**	**–**	0,27
P 62 R-25 RM	**P 62**	**YAT 205**	**RIS 205**	0,35
P 62 R-25 TF	**P 62**	**YAR 205-2F**	**RIS 205**	0,38
P 1. TF	**P 52**	**YAR 205-100-2F**	**–**	0,27
P 1. TR	**P 52**	**YAR 205-100-2RF**	**–**	0,27
P 62 R-1. TF	**P 62**	**YAR 205-100-2F**	**RIS 205**	0,38
P 30 RM	**P 62**	**YAT 206**	**–**	0,42
P 30 TF	**P 62**	**YAR 206-2F**	**–**	0,47
P 30 TR	**P 62**	**YAR 206-2RF**	**–**	0,47
P 72 R-30 RM	**P 72**	**YAT 206**	**RIS 206**	0,53
P 72 R-30 TF	**P 72**	**YAR 206-2F**	**RIS 206**	0,58
P 1.1/4 TF	**P 72**	**YAR 207-104-2F**	**–**	0,73
P 1.1/4 TR	**P 72**	**YAR 207-104-2RF**	**–**	0,73
P 80 R-1.1/4 TF	**P 80**	**YAR 207-104-2F**	**RIS 207**	0,87

rgab.ru Берг АБ bergab@ya.ru Тел. (495)-228-06-21, факс (495) 22

rgab.ru Берг АБ bergab@ya.ru Тел. (495)-228-06-21, факс (495) 22

Y-bearing pillow block units with a pressed steel housing and grub screws

d **35 – 45** mm
1 1/2 – 1 3/4 in

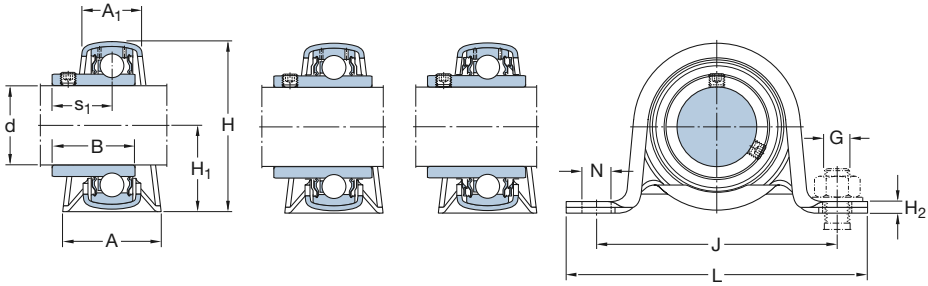

P + YAT P + YAR-2F P + YAR-2RF

Dimensions												Basic load ratings		Fatigue load limit	Permissible housing load	Designation
												dynamic	static		radial	No order designation
d	A	A_1	B	H	H_1	H_2	J	L	N	G	s_1	C	C_0	P_u		
mm/in												kN		kN	kN	–
35	41	27	33	78	39,2	5	106	130	11,2	10	23,3	25,5	15,3	0,655	3,3	P 35 RM
	41	27	42,9	78	39,2	5	106	130	11,2	10	25,4	25,5	15,3	0,655	3,3	P 35 TF
	41	27	42,9	78	39,2	5	106	130	11,2	10	25,4	25,5	15,3	0,655	3,3	P 35 TR
	43	29	33	86	43,5	5	120	148	14	12	23,3	25,5	15,3	0,655	3,8	P 80 R-35 RM
	43	29	42,9	86	43,5	5	120	148	14	12	25,4	25,5	15,3	0,655	3,8	P 80 R-35 TF
1 1/2	43	29	49,2	86	43,5	5	120	148	14	12	30,2	30,7	19	0,8	3,8	P 1.1/2 TF
	43	29	49,2	86	43,5	5	120	148	14	12	30,2	30,7	19	0,8	3,8	P 1.1/2 TR
	45	31	49,2	92	46,4	6	128	156	14	12	30,2	30,7	19	0,8	4,2	P 85 R-1.1/2 TF
40	43	29	36	86	43,5	5	120	148	14	12	25,3	30,7	19	0,8	3,8	P 40 RM
	43	29	49,2	86	43,5	5	120	148	14	12	30,2	30,7	19	0,8	3,8	P 40 TF
	43	29	49,2	86	43,5	5	120	148	14	12	30,2	30,7	19	0,8	3,8	P 40 TR
	45	31	36	92	46,4	6	128	156	14	12	25,3	30,7	19	0,8	4,2	P 85 R-40 RM
	45	31	49,2	92	46,4	6	128	156	14	12	30,2	30,7	19	0,8	4,2	P 85 R-40 TF
1 3/4	45	31	49,2	92	46,4	6	128	156	14	12	30,2	33,2	21,6	0,915	4,2	P 1.3/4 TF
	45	31	49,2	92	46,4	6	128	156	14	12	30,2	33,2	21,6	0,915	4,2	P 1.3/4 TR
45	45	31	37	92	46,4	6	128	156	14	12	25,8	33,2	21,6	0,915	4,2	P 45 RM
	45	31	49,2	92	46,4	6	128	156	14	12	30,2	33,2	21,6	0,915	4,2	P 45 TF
	45	31	49,2	92	46,4	6	128	156	14	12	30,2	33,2	21,6	0,915	4,2	P 45 TR

rgab.ru Берг АБ bergab@ya.ru Тел. (495)-228-06-21, факс (495) 22

rgab.ru Берг АБ bergab@ya.ru Тел. (495)-228-06-21, факс (495) 22

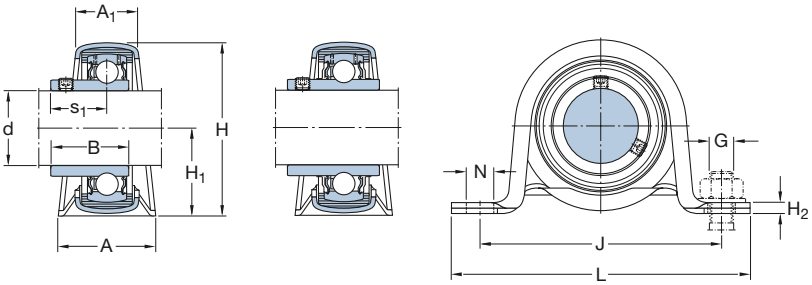

P + RIS + YAT

P + RIS + YAR-2F

Bearing unit No order designation	**Order designations** **Housing**	**Bearing**	**Rubber seating ring**	**Mass** Bearing unit
–	–			kg
P 35 RM	**P 72**	**YAT 207**	**–**	0,57
P 35 TF	**P 72**	**YAR 207-2F**	**–**	0,67
P 35 TR	**P 72**	**YAR 207-2RF**	**–**	0,67
P 80 R-35 RM	**P 80**	**YAT 207**	**RIS 207**	0,64
P 80 R-35 TF	**P 80**	**YAR 207-2F**	**RIS 207**	0,74
P 1.1/2 TF	**P 80**	**YAR 208-108-2F**	**–**	0,97
P 1.1/2 TR	**P 80**	**YAR 208-108-2RF**	**–**	0,97
P 85 R-1.1/2 TF	**P 85**	**YAR 208-108-2F**	**RIS 208**	1,10
P 40 RM	**P 80**	**YAT 208**	**–**	0,80
P 40 TF	**P 80**	**YAR 208-2F**	**–**	0,92
P 40 TR	**P 80**	**YAR 208-2RF**	**–**	0,92
P 85 R-40 RM	**P 85**	**YAT 208**	**RIS 208**	0,93
P 85 R-40 TF	**P 85**	**YAR 208-2F**	**RIS 208**	1,05
P 1.3/4 TF	**P 85**	**YAR 209-112-2F**	**–**	1,02
P 1.3/4 TR	**P 85**	**YAR 209-112-2RF**	**–**	1,02
P 45 RM	**P 85**	**YAT 209**	**–**	0,88
P 45 TF	**P 85**	**YAR 209-2F**	**–**	1,00
P 45 TR	**P 85**	**YAR 209-2RF**	**–**	1,00

rgab.ru Берг АБ bergab@ya.ru Тел. (495)-228-06-21, факс (495) 22

rgab.ru Берг АБ bergab@ya.ru Тел. (495)-228-06-21, факс (495) 22

Y-bearing plummer block units with a pressed steel housing and an eccentric locking collar

d **15 – 45** mm
3/4 – 1 1/2 in

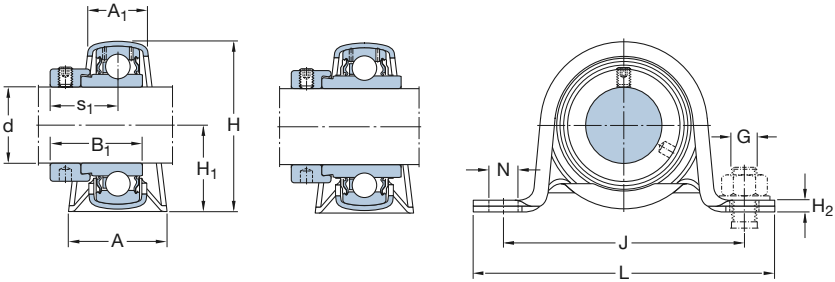

P + YET

P + YEL-2F

Dimensions												Basic load ratings		Fatigue load limit	Permissible housing load	Designation
												dynamic	static		radial	No order designation
d	A	A_1	B_1	H	H_1	H_2	J	L	N	G	s_1	C	C_0	P_u		
mm/in												kN		kN	kN	–
15	26	18	28,6	44	22	3	68	86	9,6	8	22,1	9,56	4,75	0,2	1,25	P 15 FM
	32	21	28,6	50	25,2	3	76	99	9,6	8	22,1	9,56	4,75	0,2	1,7	P 47 R-15 FM
17	26	18	28,6	44	22	3	68	86	9,6	8	22,1	9,56	4,75	0,2	1,25	P 17 FM
	32	21	28,6	50	25,2	3	76	99	9,6	8	22,1	9,56	4,75	0,2	1,7	P 47 R-17 FM
3/4	32	21	31	50	25,2	3	76	99	9,6	8	23,5	12,7	6,55	0,28	1,7	P 3/4 FM
	32	24	31	56	28,3	3,2	86	108	11,2	10	23,5	12,7	6,55	0,28	1,8	P 52 R-3/4 FM
20	32	21	31	50	25,2	3	76	99	9,6	8	23,5	12,7	6,55	0,28	1,7	P 20 FM
	32	21	43,7	50	25,2	3	76	99	9,6	8	26,6	12,7	6,55	0,28	1,7	P 20 WF
	32	24	31	56	28,3	3,2	86	108	11,2	10	23,5	12,7	6,55	0,28	1,8	P 52 R-20 FM
	32	24	43,7	56	28,3	3,2	86	108	11,2	10	26,6	12,7	6,55	0,28	1,8	P 52 R-20 WF
25	32	24	31	56	28,3	3,2	86	108	11,2	10	23,5	14	7,8	0,335	1,8	P 25 FM
	32	24	44,4	56	28,3	3,2	86	108	11,2	10	26,9	14	7,8	0,335	1,8	P 25 WF
	38	25	31	66	32,9	4	95	119	11,2	10	23,5	14	7,8	0,335	2,6	P 62 R-25 FM
	38	25	44,4	66	32,9	4	95	119	11,2	10	26,9	14	7,8	0,335	2,6	P 62 R-25 WF
1	32	24	31	56	28,3	3,2	86	108	11,2	10	23,5	14	7,8	0,335	1,8	P 1. FM
	38	25	31	66	32,9	4	95	119	11,2	10	23,5	14	7,8	0,335	2,6	P 62 R-1. FM
30	38	25	35,7	66	32,9	4	95	119	11,2	10	26,7	19,5	11,2	0,475	2,6	P 30 FM
	38	25	48,4	66	32,9	4	95	119	11,2	10	30,1	19,5	11,2	0,475	2,6	P 30 WF
	41	27	35,7	78	39,2	5	106	130	11,2	10	26,7	19,5	11,2	0,475	3,3	P 72 R-30 FM
	41	27	48,4	78	39,2	5	106	130	11,2	10	30,1	19,5	11,2	0,475	3,3	P 72 R-30 WF
35	41	27	38,9	78	39,2	5	106	130	11,2	10	29,4	25,5	15,3	0,655	3,3	P 35 FM
	41	27	51,1	78	39,2	5	106	130	11,2	10	32,3	25,5	15,3	0,655	3,3	P 35 WF
	43	29	38,9	86	43,5	5	120	148	14	12	29,4	25,5	15,3	0,655	3,8	P 80 R-35 FM
	43	29	51,1	86	43,5	5	120	148	14	12	32,3	25,5	15,3	0,655	3,8	P 80 R-35 WF
1 1/2	43	29	43,7	86	43,5	5	120	148	14	12	32,7	30,7	19	0,8	3,8	P 1.1/2 FM
	45	31	43,7	92	46,4	6	128	156	14	12	32,7	30,7	19	0,8	4,2	P 85 R-1.1/2 FM
40	43	29	43,7	86	43,5	5	120	148	14	12	32,7	30,7	19	0,8	3,8	P 40 FM
	43	29	56,3	86	43,5	5	120	148	14	12	34,9	30,7	19	0,8	3,8	P 40 WF
	45	31	43,7	92	46,4	6	128	156	14	12	32,7	30,7	19	0,8	4,2	P 85 R-40 FM
	45	31	56,3	92	46,4	6	128	156	14	12	34,9	30,7	19	0,8	4,2	P 85 R-40 WF
45	45	31	43,7	92	46,4	6	128	156	14	12	32,7	33,2	21,6	0,915	4,2	P 45 FM
	45	31	56,3	92	46,4	6	128	156	14	12	34,9	33,2	21,6	0,915	4,2	P 45 WF

rgab.ru Берг АБ bergab@ya.ru Тел. (495)-228-06-21, факс (495) 22

rgab.ru Берг АБ bergab@ya.ru Тел. (495)-228-06-21, факс (495) 22

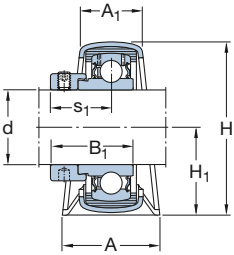

P + RIS + YET

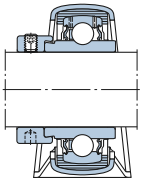

P + RIS + YEL-2F

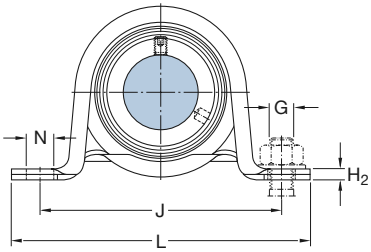

Bearing unit No order designation	**Order designations** **Housing**	**Bearing**	**Rubber seating ring**	**Mass** Bearing unit
–	–			kg
P 15 FM	**P 40**	**YET 203/15**	**–**	0,18
P 47 R-15 FM	**P 47**	**YET 203/15**	**RIS 203**	0,23
P 17 FM	**P 40**	**YET 203**	**–**	0,18
P 47 R-17 FM	**P 47**	**YET 203**	**RIS 203**	0,22
P 3/4 FM	**P 47**	**YET 204-012**	**–**	0,26
P 52 R-3/4 FM	**P 52**	**YET 204-012**	**RIS 204**	0,30
P 20 FM	**P 47**	**YET 204**	**–**	0,24
P 20 WF	**P 47**	**YEL 204-2F**	**–**	0,27
P 52 R-20 FM	**P 52**	**YET 204**	**RIS 204**	0,28
P 52 R-20 WF	**P 52**	**YEL 204-2F**	**RIS 204**	0,31
P 25 FM	**P 52**	**YET 205**	**–**	0,28
P 25 WF	**P 52**	**YEL 205-2F**	**–**	0,33
P 62 R-25 FM	**P 62**	**YET 205**	**RIS 205**	0,39
P 62 R-25 WF	**P 62**	**YEL 205-2F**	**RIS 205**	0,44
P 1. FM	**P 52**	**YET 205-100**	**–**	0,28
P 62 R-1. FM	**P 62**	**YET 205-100**	**RIS 205**	0,39
P 30 FM	**P 62**	**YET 206**	**–**	0,45
P 30 WF	**P 62**	**YEL 206-2F**	**–**	0,41
P 72 R-30 FM	**P 72**	**YET 206**	**RIS 206 A**	0,60
P 72 R-30 WF	**P 72**	**YEL 206-2F**	**RIS 206 A**	0,66
P 35 FM	**P 72**	**YET 207**	**–**	0,75
P 35 WF	**P 72**	**YEL 207-2F**	**–**	0,83
P 80 R-35 FM	**P 80**	**YET 207**	**RIS 207 A**	0,82
P 80 R-35 WF	**P 80**	**YEL 207-2F**	**RIS 207 A**	0,90
P 1.1/2 FM	**P 80**	**YET 208-108**	**–**	1,02
P 85 R-1.1/2 FM	**P 85**	**YET 208-108**	**RIS 208 A**	1,15
P 40 FM	**P 80**	**YET 208**	**–**	0,99
P 40 WF	**P 80**	**YEL 208-2F**	**–**	1,07
P 85 R-40 FM	**P 85**	**YET 208**	**RIS 208 A**	1,12
P 85 R 40 WF	**P 85**	**YEL 208-2F**	**RIS 208 A**	1,20
P 45 FM	**P 85**	**YET 209**	**–**	1,05
P 45 WF	**P 85**	**YEL 209-2F**	**–**	1,15

rgab.ru Берг АБ bergab@ya.ru Тел. (495)-228-06-21, факс (495) 22

rgab.ru Берг АБ bergab@ya.ru Тел. (495)-228-06-21, факс (495) 2

rgab.ru Берг АБ bergab@ya.ru Тел. (495)-228-06-21, факс (495) 2

rgab.ru Берг АБ bergab@ya.ru Тел. (495)-228-06-21, факс (495) 22

Y-bearing flanged units

Designs **110**

Y-TECH flanged units **114**

Y-bearing flanged units with a cast housing **115**

Y-bearing flanged units with a pressed steel housing **116**

Data – general **117**
Dimensions 117
Tolerances 117
Radial internal clearance 117
Materials 117
Load carrying ability of the housings 118
Attaching to a support surface 118
End covers 120
Grease fills 120
Mounting 120

Product tables **122**
Y-TECH flanged units with a square housing
and grub screws 122
and grub screws and food-grade grease 124
Y-TECH flanged units with an oval housing
and grub screws 126
and grub screws and food-grade grease 128
Y-bearing flanged units with a square cast housing
and grub screws 130
and an eccentric locking collar 134
and an adapter sleeve 136
Y-bearing flanged units with an oval cast housing
and grub screws 140
and an eccentric locking collar 144
and an adapter sleeve 146
Y-bearing flanged units with a round cast housing
and grub screws 148
Y-bearing flanged units with a pressed steel housing
and grub screws 150
and an eccentric locking collar 156

rgab.ru Берг АБ bergab@ya.ru Тел. (495)-228-06-21, факс (495) 22

rgab.ru Берг АБ bergab@ya.ru Тел. (495)-228-06-21, факс (495) 22

Designs

SKF Y-bearing flanged units are available in many different designs and in a variety of housing materials. Housing materials include:

- composite material (➔ **fig 1**) referred to as Y-TECH flanged units,
- grey cast iron (➔ **fig 2**) or
- pressed sheet steel (➔ **fig 3**).

Y-bearing flanged units are located onto the shaft through the inner ring of the inserted Y-bearing by any of the following methods:

- grub screws,
- eccentric locking collar or
- adapter sleeve.

The Y-bearing can be sealed with either

- the standard “Superagriseal”,
- the standard “Superagriseal” and an additional flinger or
- the highly effective multiple seal.

For additional information about Y-bearings, please refer to the section “Y-bearings”, starting on **page 53**.

Y-bearing flanged units available as units are listed in the product tables. Other units can be composed by ordering the parts separately. The matrices on **pages 111** to **113** show the wide variety of combinations of Y-bearings and flanged housings.

Fig 1

Fig 2

Fig 3

rgab.ru Берг АБ bergab@ya.ru Тел. (495)-228-06-21, факс (495) 22

rgab.ru Берг АБ bergab@ya.ru Тел. (495)-228-06-21, факс (495) 22

Y-TECH flanged unit	Housings of composite material			
Y-bearings	FYK 5(00)	FYKC 5(00) N	FYTBK 5(00)	FYTBKC 5(00) N
YAR 2-2F	FYK .. TF	Parts must be ordered separately	FYTBK .. TF	Parts must be ordered separately
	20 – 40 mm	20 – 40 mm	20 – 35 mm	20 – 35 mm
	3/4 – 1 1/2 in	3/4 – 1 1/2 in	3/4 – 1 1/4 in	3/4 – 1 1/4 in
YAR 2-2RF	FYK .. TR	Parts must be ordered separately	FYTBK .. TR	Parts must be ordered separately
	20 – 40 mm	20 – 40 mm	20 – 35 mm	20 – 35 mm
	3/4 – 1 1/2 in	3/4 – 1 1/2 in	3/4 – 1 1/4 in	3/4 – 1 1/4 in
YAR 2-2RF/HV	Parts must be ordered separately	FYKC .. NTH	Parts must be ordered separately	FYTBKC .. NTH
	20 – 40 mm	20 – 40 mm	20 – 35 mm	20 – 35 mm
	3/4 – 1 1/2 in	3/4 – 1 1/2 in	3/4 – 1 1/4 in	3/4 – 1 1/4 in
YAR 2-2RF/VE495	Parts must be ordered separately			
	20 – 40 mm	20 – 40 mm	20 – 35 mm	20 – 35 mm
YAT 2	Parts must be ordered separately			
	20 – 40 mm	20 – 40 mm	20 – 35 mm	20 – 35 mm
YEL 2-2F	Parts must be ordered separately			
	20 – 40 mm	20 – 40 mm	20 – 35 mm	20 – 35 mm
YEL 2-2RF/VL065	Parts must be ordered separately			
	20 – 40 mm	20 – 40 mm	20 – 35 mm	20 – 35 mm
YET 2	Parts must be ordered separately			
	20 – 40 mm	20 – 40 mm	20 – 35 mm	20 – 35 mm
	3/4 – 1 1/2 in	3/4 – 1 1/2 in	3/4 – 1 in	3/4 – 1 in
YSA 2-2FK on adapter sleeve	Parts must be ordered separately			
	20 – 35 mm	20 – 35 mm	20 – 30 mm	20 – 30 mm
	3/4 – 1 1/4 in	3/4 – 1 1/4 in	3/4 – 1 1/8 in	3/4 – 1 1/8 in
17262(00)	Parts must be ordered separately			
	20 – 40 mm	20 – 40 mm	20 – 35 mm	20 – 35 mm

5

rgab.ru Берг АБ bergab@ya.ru Тел. (495)-228-06-21, факс (495) 22

rgab.ru Берг АБ bergab@ya.ru Тел. (495)-228-06-21, факс (495) 22

Y-bearing flanged unit	Housings of grey cast iron				
Y-bearings	FY 5(00) M	FYJ 5(00)	FYTB 5(00) M	FYTJ 5(00)	FYC 5(00)
YAR 2-2F	**FY .. TF**	**FYJ .. TF**	**FYTB .. TF**	**FYTJ .. TF**	**FYC .. TF**
	12 – 65 mm	20 – 100 mm	12 – 50 mm	20 – 50 mm	20 – 65 mm
	3/4 – 2 1/2 in	3/4 – 2 1/2 in	3/4 – 1 3/4 in	3/4 – 1 3/4 in	3/4 – 2 1/2 in
YAR 2-2RF	**FY .. TR**	Parts must be ordered separately	**FYTB .. TR**	Parts must be ordered separately	Parts must be ordered separately
	20 – 60 mm	20 – 65 mm	20 – 50 mm	20 – 50 mm	20 – 65 mm
	3/4 – 2 in	3/4 – 2 1/2 in	3/4 – 1 3/4 in	3/4 – 1 3/4 in	3/4 – 2 1/2 in
YAR 2-2RF/HV	Parts must be ordered separately				
	20 – 40 mm	20 – 40 mm	20 – 40 mm	20 – 40 mm	20 – 40 mm
	3/4 – 1 1/2 in	3/4 – 1 1/2 in	3/4 – 1 1/2 in	3/4 – 1 1/2 in	3/4 – 1 1/2 in
YAR 2-2RF/VE495	Parts must be ordered separately				
	20 – 40 mm	20 – 40 mm	20 – 40 mm	20 – 40 mm	20 – 40 mm
YAT 2	Parts must be ordered separately				
	17 – 50 mm	20 – 50 mm	17 – 50 mm	20 – 50 mm	20 – 50 mm
YEL 2-2F	**FY .. WF**	Parts must be ordered separately	**FYTB .. WF**	Parts must be ordered separately	Parts must be ordered separately
	20 – 60 mm	20 – 60 mm	20 – 50 mm	20 – 50 mm	20 – 60 mm
YEL 2-2RF/VL 065	Parts must be ordered separately				
	20 – 40 mm	20 – 40 mm	20 – 40 mm	20 – 40 mm	20 – 40 mm
YET 2	**FY .. FM**	Parts must be ordered separately	**FYTB .. FM**	Parts must be ordered separately	Parts must be ordered separately
	15 – 60 mm	20 – 60 mm	15 – 50 mm	20 – 50 mm	20 – 60 mm
	3/4 – 1 1/2 in	3/4 – 1 1/2 in	3/4 – 1 1/2 in	3/4 – 1 1/2 in	3/4 – 1 1/2 in
YSA 2-2FK on adapter sleeve	Parts must be ordered separately	**FYJ .. KF**	Parts must be ordered separately	**FYTJ .. KF**	Parts must be ordered separately
	20 – 60 mm	20 – 60 mm	20 – 45 mm	20 – 45 mm	20 – 60 mm
	3/4 – 2 3/8 in	3/4 – 2 3/8 in	3/4 – 1 3/4 in	3/4 – 1 3/4 in	3/4 – 2 3/8 in
17262(00)	Parts must be ordered separately				
	17 – 60 mm	20 – 60 mm	17 – 50 mm	20 – 50 mm	20 – 60 mm

rgab.ru Берг АБ bergab@ya.ru Тел. (495)-228-06-21, факс (495) 22

rgab.ru Берг АБ bergab@ya.ru Тел. (495)-228-06-21, факс (495) 22

Y-bearing flanged unit Y-bearings	Housings of pressed steel PF	PFD	PFT
YAR 2-2F	Parts must be ordered separately		
	12 – 50 mm	12 – 40 mm	12 – 40 mm
	3/4 – 1 3/4 in	3/4 – 1 1/2 in	3/4 – 1 1/2 in
YAR 2-2RF	Parts must be ordered separately		
	20 – 50 mm	20 – 40 mm	20 – 40 mm
	3/4 – 1 3/4 in	3/4 – 1 1/2 in	3/4 – 1 1/2 in
YAR 2-2RF/HV	Parts must be ordered separately		
	20 – 40 mm	20 – 40 mm	20 – 40 mm
	3/4 – 1 1/2 in	3/4 – 1 1/2 in	3/4 – 1 1/2 in
YAR 2-2RF/VE495	Parts must be ordered separately		
	20 – 40 mm	20 – 40 mm	20 – 40 mm
YAT 2	Parts must be ordered separately		
	17 – 50 mm	17 – 40 mm	17 – 40 mm
YEL 2-2F	Parts must be ordered separately		
	20 – 50 mm	20 – 40 mm	20 – 40 mm
YEL 2-2RF/VL065	Parts must be ordered separately		
	20 – 40 mm	20 – 40 mm	20 – 40 mm
YET 2	Parts must be ordered separately		
	15 – 50 mm	15 – 40 mm	15 – 40 mm
	3/4 – 1 1/2 in	3/4 – 1 1/2 in	3/4 – 1 1/2 in
YSA 2-2FK on adapter sleeve	Parts must be ordered separately		
	20 – 45 mm	20 – 35 mm	20 – 35 mm
	3/4 – 1 3/4 in	3/4 – 1 1/4 in	3/4 – 1 1/4 in
17262(00)	Parts must be ordered separately		
	17 – 50 mm	17 – 40 mm	17 – 40 mm

5

rgab.ru Берг АБ bergab@ya.ru Тел. (495)-228-06-21, факс (495) 22

rgab.ru Берг АБ bergab@ya.ru Тел. (495)-228-06-21, факс (495) 22

Y-TECH flanged units

Y-TECH flanged units have housings made of composite material. They were developed for bearing arrangements that must operate reliably in difficult environments for extended periods without maintenance. Altogether there are four series available for selection. These are units in the

- FYK series (➔ **fig 4**) and the FYKC series (➔ **fig 5**) with a square flange and four bolt holes and
- FYTBK series (➔ **fig 6**) and FYTBKC series with an oval flange and two bolt holes.

Y-TECH flanged units in the FYK and FYTBK series are fitted with Y-bearings in the

- YAR 2-2F series,
  unit designation suffix TF, and
- YAR 2-2RF series,
  unit designation suffix TR.

These units, which are attached to the shaft with grub screws, are in the standard SKF assortment .

Y-TECH flanged units in the FYKC and FYTBKC series are also attached to the shaft with grub screws but they are designed primarily for use in food processing machines and corrosive environments. They are equipped with stainless steel Y-bearings that are filled with a non-toxic food grade grease and can be relubricated (YAR 2-2RF/HV series, NTH unit designation suffix). This grease is based on a synthetic hydrocarbon oil that uses an aluminium-complex soap as a thickener (➔ **pages 42** and **43**).

Fig 4

Fig 5

Fig 6

rgab.ru Берг АБ bergab@ya.ru Тел. (495)-228-06-21, факс (495) 22

rgab.ru Берг АБ bergab@ya.ru Тел. (495)-228-06-21, факс (495) 22

Fig 7

Fig 8

Fig 9

Y-bearing flanged units with a cast housing

Y-bearing units with a flanged cast housing can be relubricated through a grease nipple in the housing. This makes them especially suitable for bearing arrangements that operate under any of the following conditions:

- high levels of contamination,
- high speeds,
- high temperatures,
- relatively heavy loads.

Three different housing designs are available. These are housings in the

- FY and FYJ series with a square flange and four holes for attachment bolts (→ **fig** 7),
- FYC series with a round flange and four holes for attachment bolts (→ **fig** 8) and
- FYTB and FYTJ series with an oval flange and two holes for attachment bolts (→ **fig** 9).

5

rgab.ru Берг АБ bergab@ya.ru Тел. (495)-228-06-21, факс (495) 22

rgab.ru Берг АБ bergab@ya.ru Тел. (495)-228-06-21, факс (495) 22

Y-bearing flanged units with a pressed steel housing

Flanged Y-bearing units with a pressed steel housing are designed for simple applications with limited loads and speeds. The two-part housing, which has no provision for relubrication, is ordered separately from the insert bearing, making a large number of combinations possible.

The flanged housings made of pressed steel are available in three different designs. These are housings in the

- PF series with a round flange and three or four square holes for attachment bolts (→ **fig** 10),
- PFD series with a triangular flange and three square holes for attachment bolts (→ **fig** 11) and
- PFT series with an oval flange and two square holes for attachment bolts (→ **fig** 12).

Fig 10

Fig 11

Fig 12

rgab.ru Берг АБ bergab@ya.ru Тел. (495)-228-06-21, факс (495) 22

rgab.ru Берг АБ bergab@ya.ru Тел. (495)-228-06-21, факс (495) 22

Data – general

Dimensions
The boundary dimensions for Y-bearing flanged units in the

- FY, FYK(C), FYTB and FYTBK(C) series conform to ISO 3228:1993,
- FYJ, FYTJ and FYC series conform to standard JIS B 1559-1995 and
- PF, PFD and PFT series conform to ISO 3228:1993.

Tolerances
For Y-bearing flanged units with a cast iron housing, the tolerance for bearing protrusion T (→ **fig 13**) is

- ± 0,5 mm for units up to and inclusive 50 mm bore diameter and
- ± 0,6 mm for larger units.

For Y-bearing flanged units with housings made of composite material or cast iron, the outside diameter of the bearing is matched to the diameter of the housing bore so that the outer ring is prevented from turning in its seat, but still able to compensate for misalignment.

Additional information about tolerances for the inner ring bore are listed in the section "Y-bearings" on **pages 62** and **63**.

Radial internal clearance
A Y-bearing flanged unit has the same radial internal clearance as a similarly sized individual Y-bearing which it incorporates.

Additional information about the radial internal clearance can be found in the section "Y-bearings" on **page 63**.

Fig 13

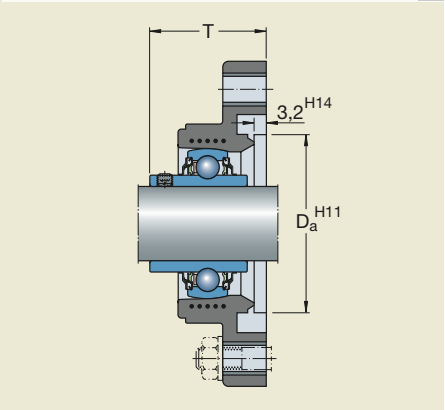

Materials

Composite housings

These housings are made of injection moulded glass fibre reinforced polyamide 6,6. A steel coil embedded in the housing adds greater stability to the form of the housing, also with increasing temperature.

The bolt holes for housings in the FYK and FYTBK series are reinforced with zinc-plated sheet steel inserts. The standard housing colour is black.

FYKC and FYTBKC series housings are white and equipped with stainless steel bolt hole inserts.

Cast iron housings

Cast housings are manufactured from grey cast iron EN-GJL HB195 according to EN 1561:1997.

Pressed steel housings

Pressed steel housings are made of cold-rolled steel and are zinc-coated for corrosion protection.

5

rgab.ru Берг АБ bergab@ya.ru Тел. (495)-228-06-21, факс (495) 22

rgab.ru Берг АБ bergab@ya.ru Тел. (495)-228-06-21, факс (495) 22

Load carrying ability of the housings
Housings made of either composite material or grey cast iron are able to withstand the same dynamic and static loads as the Y-bearings they incorporate. These units can also be used for applications where shock loads or variable axial loads occur.

Because of their special properties, SKF Y-bearing units are used in applications in virtually every industry. If however, they are to be used in an application where health, safety, or the environment is at risk, SKF recommends contacting the SKF application engineering service during the design phase.

Pressed steel housings have a lower load carrying capacity than their insert bearings. Permissible radial loads are specified in the product tables. The axial load should not exceed 20 % of the permissible radial load. If the bearing units will be subjected to shock loads or variable axial loads, a cast iron or Y-TECH housing should always be used.

Flanged composite housings and most cast iron housings have a recess (diameter D_a) that can be used to centre the housing on an appropriate spigot on the machine wall (➔ **fig 14**). As such, the attachment bolts are not subjected to radial forces. This spigot can be provided by

- machining the wall accordingly (**a**) or
- attaching an appropriate washer to the wall by several grub screws (**b**).

Attaching to a support surface
Y-bearing flanged units have two, three or four bolt holes through which they can be attached to their support surface with threaded fasteners. Bolt holes are

- round and reinforced with pressed steel inserts in composite housings,
- drilled and round in cast housings, and
- square in pressed steel housings.

In absence of a centring spigot and when heavy loads apply, SKF recommends doweling the housing to its support surface. Dimples for the dowel pin holes are cast into the FY, FYJ, FYTB and FYTJ housings. Information on the position and size of the holes for these dowel pins can be found in **table 1**.

Fig 14

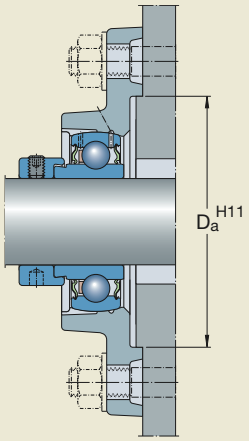

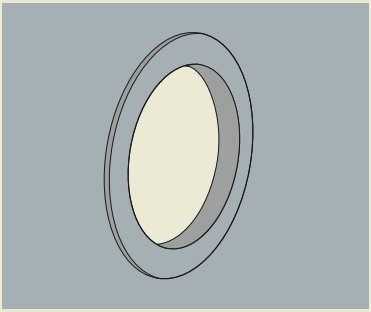

a

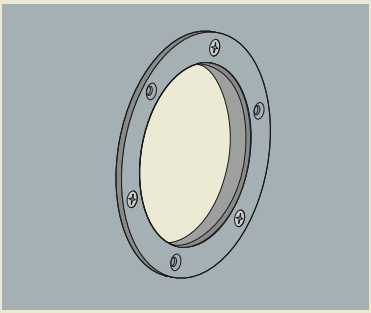

b

rgab.ru Берг АБ bergab@ya.ru Тел. (495)-228-06-21, факс (495) 22

rgab.ru Берг АБ bergab@ya.ru Тел. (495)-228-06-21, факс (495) 22

Table 1

Position and size of dowel pin holes for Y-bearing flanged housings made of grey cast iron

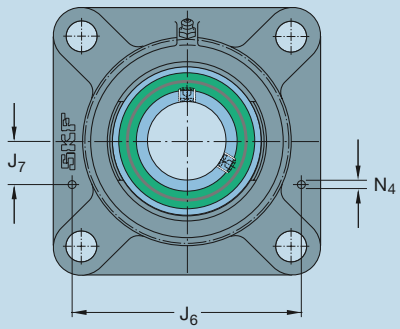

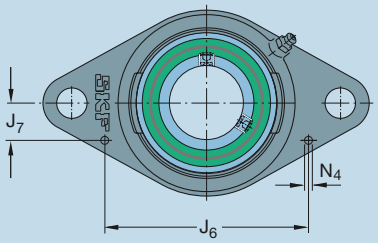

Housing size	Dimensions for housings of FYJ series			FY series			FYTB, FYTJ series		
	J_6	J_7	N_4	J_6	J_7	N_4	J_6	J_7	N_4
–	mm								
503	–	–	–	66	12	4	61,5	11	2
504	74	16	4	74	16	4	74	11,5	2
505	83	19	4	83	19	4	81	12	4
506	96	24,5	4	96	24,5	4	98,5	12,5	4
507	106	29	4	106	29	4	106	15	5
508	118	34	4	118	34	4	115,5	16	6
509	123	33,5	5	123	32	5	120,5	18	6
510	129	35,5	5	129	35,5	5	127	20	6
511	148	45	5	148	45	5	–	–	–
512	161	49,5	5	161	49,5	5	–	–	–
513	169	50,5	6	169	51	6	–	–	–
514	169	49	8	–	–	–	–	–	–
515	176	51,5	8	–	–	–	–	–	–
516	184	51,5	8	–	–	–	–	–	–
518	207	52,5	8	–	–	–	–	–	–
520	233	55	8	–	–	–	–	–	–

rgab.ru Берг АБ bergab@ya.ru Тел. (495)-228-06-21, факс (495) 22

rgab.ru Берг АБ bergab@ya.ru Тел. (495)-228-06-21, факс (495) 22

End covers
To protect the shaft ends and avoid accidents, end covers are available for Y-bearing flanged units (➔ **fig 15**).

In the product tables, end covers in the ECY 2 series are shown together with the appropriate bearing unit. The designation of the end cover as well as the distance that the end cover protrudes from the housing are listed in the product tables.

Additional information about end covers can be found in the section "Design of bearing arrangements" on **pages 40** and **41**.

Grease fills
All standard design SKF Y-bearing flanged units are filled with a high-quality long lasting lithium-calcium soap grease of consistency 2 on the NLGI scale.

Y-TECH flanged bearing units in the FYKC and FYTBKC series represent an exception. They are designed for use in food processing machines as well as in corrosive environments and are filled with a non-toxic, food-grade grease based on a synthetic hydrocarbon oil using an aluminium-complex soap as a thickener.

For additional information about lubricants and lubrication, please refer to the section "Lubrication and maintenance", starting on **page 42**.

Mounting
The procedure for mounting a Y-bearing flanged unit depends on

- the design of the housing and
- the method used to attach the unit to the shaft.

These methods are described in detail in the section "Mounting instructions", starting on **page 169**.

Fig 15

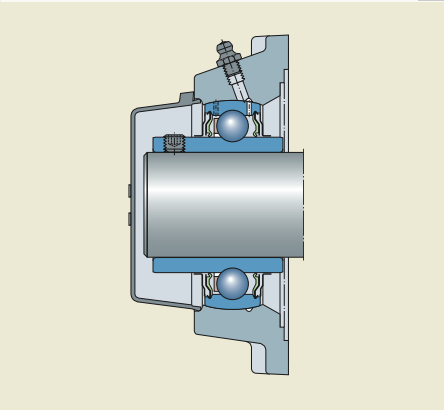

rgab.ru Берг АБ bergab@ya.ru Тел. (495)-228-06-21, факс (495) 22

rgab.ru Берг АБ bergab@ya.ru Тел. (495)-228-06-21, факс (495) 22

5

rgab.ru Берг АБ bergab@ya.ru Тел. (495)-228-06-21, факс (495) 22

rgab.ru Берг АБ bergab@ya.ru Тел. (495)-228-06-21, факс (495) 22

Y-TECH flanged units with square housing and grub screws

d **20 – 40** mm

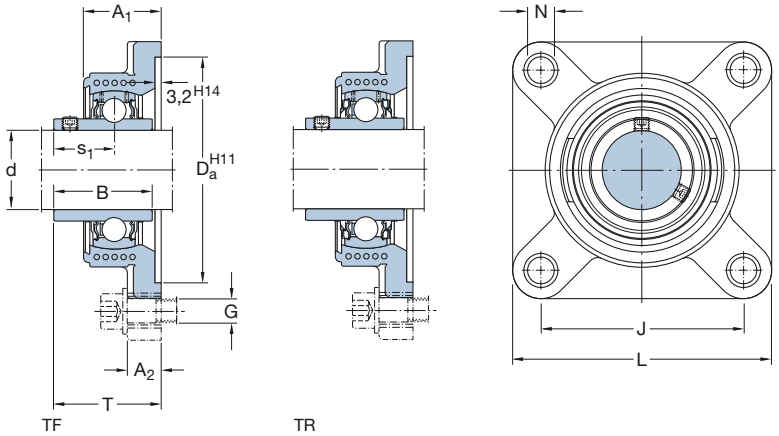

Dimensions											Basic load ratings		Fatigue load limit	Limiting speed	Designation
											dynamic	static		with shaft tolerance h6	Bearing unit
d	A_1	A_2	B	D_a	J	L	N	G	s_1	T	C	C_0	P_u		
mm											kN		kN	r/min	–
20	30	15	31	68,3	63,5	86	12	10	18,3	37,3	12,7	6,55	0,28	8 500	**FYK 20 TF**
	30	15	31	68,3	63,5	86	12	10	18,3	37,3	12,7	6,55	0,28	5 000	**FYK 20 TR**
25	31	15	34,1	74,6	70	95	12	10	19,8	38,8	14	7,8	0,335	7 000	**FYK 25 TF**
	31	15	34,1	74,6	70	95	12	10	19,8	38,8	14	7,8	0,335	4 300	**FYK 25 TR**
30	33	15,3	38,1	93,7	82,5	108	12	10	22,2	42,2	19,5	11,2	0,475	6 300	**FYK 30 TF**
	33	15,3	38,1	93,7	82,5	108	12	10	22,2	42,2	19,5	11,2	0,475	3 800	**FYK 30 TR**
35	35	17	42,9	106,4	92	118	14,5	12	25,4	46,4	25,5	15,3	0,655	5 300	**FYK 35 TF**
	35	17	42,9	106,4	92	118	14,5	12	25,4	46,4	25,5	15,3	0,655	3 200	**FYK 35 TR**
40	39	17	49,2	115,9	101,5	130	14,5	12	30,2	54,2	30,7	19	0,8	4 800	**FYK 40 TF**
	39	17	49,2	115,9	101,5	130	14,5	12	30,2	54,2	30,7	19	0,8	2 800	**FYK 40 TR**

rgab.ru Берг АБ bergab@ya.ru Тел. (495)-228-06-21, факс (495) 22

rgab.ru Берг АБ bergab@ya.ru Тел. (495)-228-06-21, факс (495) 22

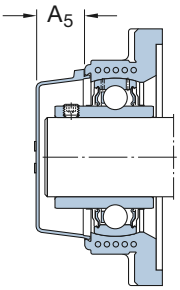

Designations Bearing unit	Separate components Bearing	Housing	**Mass** Bearing unit	**Appropriate end cover** Designation	Dimension A_5
–			kg	–	mm
FYK 20 TF	YAR 204-2F	FYK 504	0,26	ECY 204	18,5
FYK 20 TR	YAR 204-2RF	FYK 504	0,26	ECY 204	18,5
FYK 25 TF	YAR 205-2F	FYK 505	0,33	ECY 205	18
FYK 25 TR	YAR 205-2RF	FYK 505	0,33	ECY 205	18
FYK 30 TF	YAR 206-2F	FYK 506	0,48	ECY 206	20
FYK 30 TR	YAR 206-2RF	FYK 506	0.48	ECY 206	20
FYK 35 TF	YAR 207-2F	FYK 507	0,66	ECY 207	22
FYK 35 TR	YAR 207-2RF	FYK 507	0,66	ECY 207	22
FYK 40 TF	YAR 208-2F	FYK 508	0,87	ECY 208	23,5
FYK 40 TR	YAR 208-2RF	FYK 508	0,87	ECY 208	23,5

rgab.ru Берг АБ bergab@ya.ru Тел. (495)-228-06-21, факс (495) 22

rgab.ru Берг АБ bergab@ya.ru Тел. (495)-228-06-21, факс (495) 22

Y-TECH flanged units with square housing, grub screws and food-grade grease

d **20 – 40** mm

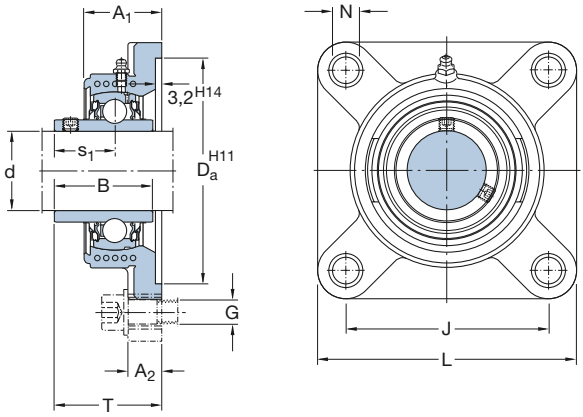

Dimensions											Basic load ratings		Fatigue load limit	Limiting speed	Designation
											dynamic	static		with shaft tolerance h6	Bearing unit
d	A_1	A_2	B	D_a	J	L	N	G	s_1	T	C	C_0	P_u		
mm											kN		kN	r/min	–
20	30	15	31	68,3	63,5	86	12	10	18,3	37,3	10,8	6,55	0,28	5 000	**FYKC 20 NTH**
25	31	15	34,1	74,6	70	95	12	10	19,8	38,8	11,9	7,8	0,335	4 300	**FYKC 25 NTH**
30	33	15,3	38,1	93,7	82,5	108	12	10	22,2	42,2	16,3	11,2	0,475	3 800	**FYKC 30 NTH**
35	35	17	42,9	106,4	92	118	14,5	12	25,4	46,4	21,6	15,3	0,655	3 200	**FYKC 35 NTH**
40	39	17	49,2	115,9	101,5	130	14,5	12	30,2	54,2	24,7	19	0,8	2 800	**FYKC 40 NTH**

rgab.ru Берг АБ bergab@ya.ru Тел. (495)-228-06-21, факс (495) 22

rgab.ru Берг АБ bergab@ya.ru Тел. (495)-228-06-21, факс (495) 22

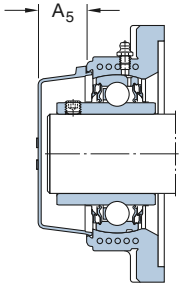

Designations Bearing unit	Separate components Bearing	Housing	**Mass** Bearing unit	**Appropriate end cover** Designation	Dimension A_5
–			kg	–	mm
FYKC 20 NTH	YAR 204-2RF/HV	FYKC 504 N	0,26	ECY 204	18,5
FYKC 25 NTH	YAR 205-2RF/HV	FYKC 505 N	0,33	ECY 205	18
FYKC 30 NTH	YAR 206-2RF/HV	FYKC 506 N	0,48	ECY 206	20
FYKC 35 NTH	YAR 207-2RF/HV	FYKC 507 N	0,66	ECY 207	22
FYKC 40 NTH	YAR 208-2RF/HV	FYKC 508 N	0,87	ECY 208	23,5

rgab.ru Берг АБ bergab@ya.ru Тел. (495)-228-06-21, факс (495) 22

rgab.ru Берг АБ bergab@ya.ru Тел. (495)-228-06-21, факс (495) 22

Y-TECH flanged units with removable housing and grub screws

d **20 – 35** mm

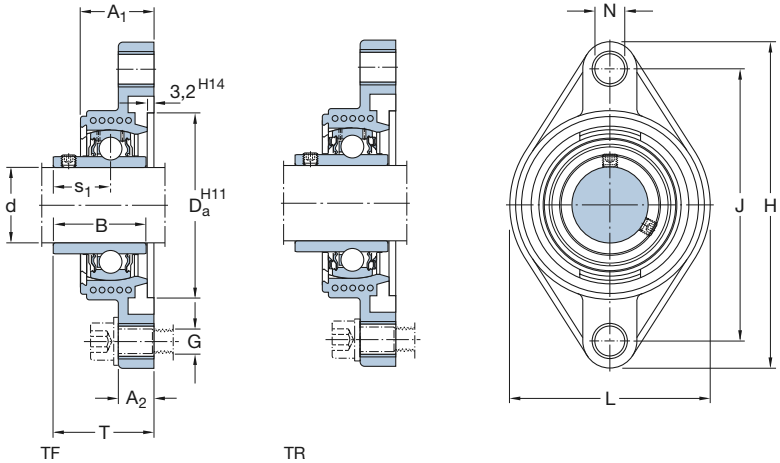

Dimensions												Basic load ratings		Fatigue load limit	Limiting speed	Designation
												dynamic	static		with shaft tolerance h6	Bearing unit
d	A_1	A_2	B	D_a	H	J	L	N	G	s_1	T	C	C_0	P_u		
mm												kN		kN	r/min	–
20	29,5	15	31	50,8	112	90	60,5	12	10	18,3	37,3	12,7	6,55	0,28	8 500	**FYTBK 20 TF**
	29,5	15	31	50,8	112	90	60,5	12	10	18,3	37,3	12,7	6,55	0,28	5 000	**FYTBK 20 TR**
25	30	15	34,1	63,5	124	99	70	12	10	19,8	38,8	14	7,8	0,335	7 000	**FYTBK 25 TF**
	30	15	34,1	63,5	124	99	70	12	10	19,8	38,8	14	7,8	0,335	4 300	**FYTBK 25 TR**
30	33	15	38,1	76,2	142,5	116,5	83	12	10	22,2	42,2	19,5	11,2	0,475	6 300	**FYTBK 30 TF**
	33	15	38,1	76,2	142,5	116,5	83	12	10	22,2	42,2	19,5	11,2	0,475	3 800	**FYTBK 30 TR**
35	35	17	42,9	88,9	156	130	96	14,5	12	25,4	46,4	25,5	15,3	0,655	5 300	**FYTBK 35 TF**
	35	17	42,9	88,9	156	130	96	14,5	12	25,4	46,4	25,5	15,3	0,655	3 200	**FYTBK 35 TR**

rgab.ru Берг АБ bergab@ya.ru Тел. (495)-228-06-21, факс (495) 22

rgab.ru Берг АБ bergab@ya.ru Тел. (495)-228-06-21, факс (495) 22

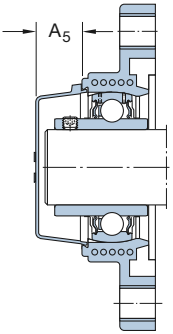

Designations Bearing unit	Separate components Bearing	Housing	**Mass** Bearing unit	**Appropriate end cover** Designation	Dimension A_5
–			kg	–	mm
FYTBK 20 TF	YAR 204-2F	FYTBK 504	0,24	ECY 204	18,5
FYTBK 20 TR	YAR 204-2RF	FYTBK 504	0,24	ECY 204	18,5
FYTBK 25 TF	YAR 205-2F	FYTBK 505	0,29	ECY 205	18
FYTBK 25 TR	YAR 205-2RF	FYTBK 505	0,29	ECY 205	18
FYTBK 30 TF	YAR 206-2F	FYTBK 506	0,44	ECY 206	20
FYTBK 30 TR	YAR 206-2RF	FYTBK 506	0,44	ECY 206	20
FYTBK 35 TF	YAR 207-2F	FYTBK 507	0,61	ECY 207	22
FYTBK 35 TR	YAR 207-2RF	FYTBK 507	0,61	ECY 207	22

rgab.ru Берг АБ bergab@ya.ru Тел. (495)-228-06-21, факс (495) 22

rgab.ru Берг АБ bergab@ya.ru Тел. (495)-228-06-21, факс (495) 22

Y-TECH flanged units with removal housing, grub screws and food-grade grease

d **20 – 35** mm

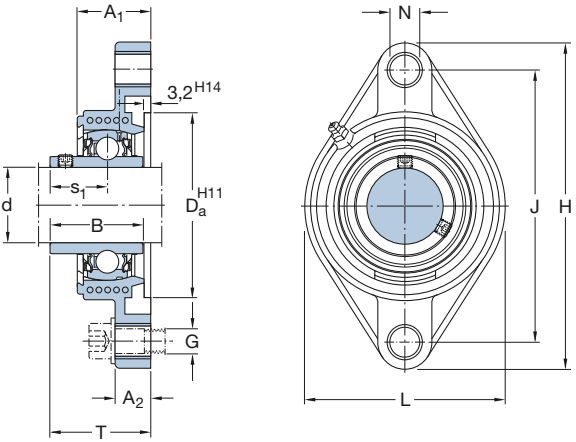

Dimensions												Basic load ratings		Fatigue load limit	Limiting speed	Designation
												dynamic	static		with shaft tolerance h6	Bearing unit
d	A_1	A_2	B	D_a	H	J	L	N	G	s_1	T	C	C_0	P_u		
mm												kN		kN	r/min	–
20	29,5	15	31	50,8	112	90	60,5	12	10	18,3	37,3	10,8	6,55	0,28	5 000	**FYTBKC 20 NTH**
25	30	15	34,1	63,5	124	99	70	12	10	19,8	38,8	11,9	7,8	0,335	4 300	**FYTBKC 25 NTH**
30	33	15	38,1	76,2	142,5	116,5	83	12	10	22,2	42,2	16,3	11,2	0,475	3 800	**FYTBKC 30 NTH**
35	35	17	42,9	88,9	156	130	96	14,5	12	25,4	46,4	21,6	15,3	0,655	3 200	**FYTBKC 35 NTH**

rgab.ru Берг АБ bergab@ya.ru Тел. (495)-228-06-21, факс (495) 22

rgab.ru Берг АБ bergab@ya.ru Тел. (495)-228-06-21, факс (495) 22

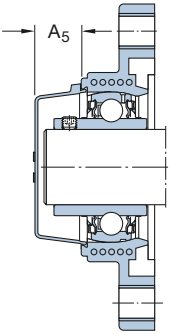

Designations Bearing unit	Separate components Bearing	Housing	**Mass** Bearing unit	**Appropriate end cover** Designation	Dimension A_5
–			kg	–	mm
FYTBKC 20 NTH	YAR 204-2RF/HV	FYTBKC 504 N	0,24	ECY 204	18,5
FYTBKC 25 NTH	YAR 205-2RF/HV	FYTBKC 505 N	0,29	ECY 205	18
FYTBKC 30 NTH	YAR 206-2RF/HV	FYTBKC 506 N	0,44	ECY 206	20
FYTBKC 35 NTH	YAR 207-2RF/HV	FYTBKC 507 N	0,61	ECY 207	22

rgab.ru Берг АБ bergab@ya.ru Тел. (495)-228-06-21, факс (495) 22

rgab.ru Берг АБ bergab@ya.ru Тел. (495)-228-06-21, факс (495) 22

Y-bearing flanged units with square cast housing and grub screws

d **12 – 40** mm
3/4 – 1 1/2 in

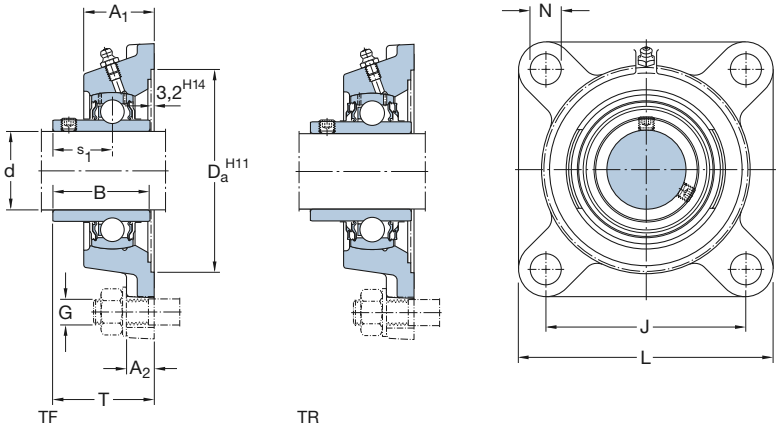

Dimensions											Basic load ratings		Fatigue load limit	Limiting speed	Designation
											dynamic	static		with shaft tolerance h6	Bearing unit
d	A_1	A_2	B	D_a	J	L	N	G	s_1	T	C	C_0	P_u		
mm/in											kN		kN	r/min	–
12	26	11	27,4	55,6	54	76	11,5	10	15,9	32,9	9,56	4,75	0,2	9 500	**FY 12 TF**
15	26	11	27,4	55,6	54	76	11,5	10	15,9	32,9	9,56	4,75	0,2	9 500	**FY 15 TF**
17	26	11	27,4	55,6	54	76	11,5	10	15,9	32,9	9,56	4,75	0,2	9 500	**FY 17 TF**
3/4	29,5	11	31	68,3	63,5	86	11,5	10	18,3	37,3	12,7	6,55	0,28	8 500	**FY 3/4 TF**
	25,5	11	31	68,3	64	86	12	10	18,3	33,3	12,7	6,55	0,28	8 500	**FYJ 3/4 TF**
20	29,5	11	31	68,3	63,5	86	11,5	10	18,3	37,3	12,7	6,55	0,28	8 500	**FY 20 TF**
	25,5	11	31	68,3	64	86	12	10	18,3	33,3	12,7	6,55	0,28	8 500	**FYJ 20 TF**
	29,5	11	31	68,3	63,5	86	11,5	10	18,3	37,3	12,7	6,55	0,28	5 000	**FY 20 TR**
25	30	12	34,1	74,6	70	95	11,5	10	19,8	38,8	14	7,8	0,335	7 000	**FY 25 TF**
	27	12	34,1	74,6	70	95	12	10	19,8	35,8	14	7,8	0,335	7 000	**FYJ 25 TF**
	30	12	34,1	74,6	70	95	11,5	10	19,8	38,8	14	7,8	0,335	4 300	**FY 25 TR**
1	30	12	34,1	74,6	70	95	11,5	10	19,8	38,8	14	7,8	0,335	7 000	**FY 1. TF**
	27	12	34,1	74,6	70	95	12	10	19,8	35,8	14	7,8	0,335	7 000	**FYJ 1. TF**
30	32,5	13	38,1	93,7	82,5	108	11,5	10	22,2	42,2	19,5	11,2	0,475	6 300	**FY 30 TF**
	31	13	38,1	93,7	83	108	12	10	22,2	40,2	19,5	11,2	0,475	6 300	**FYJ 30 TF**
	32,5	13	38,1	93,7	82,5	108	11,5	10	22,2	42,2	19,5	11,2	0,475	3 800	**FY 30 TR**
1 1/4	34,5	13	42,9	106,4	92	118	14	12	25,4	46,4	25,5	15,3	0,655	5 300	**FY 1.1/4 TF**
	34	13	42,9	106,4	92	118	14	12	25,4	44,4	25,5	15,3	0,655	5 300	**FYJ 1.1/4 TF**
35	34,5	13	42,9	106,4	92	118	14	12	25,4	46,4	25,5	15,3	0,655	5 300	**FY 35 TF**
	34	13	42,9	106,4	92	118	14	12	25,4	44,4	25,5	15,3	0,655	5 300	**FYJ 35 TF**
	34,5	13	42,9	106,4	92	118	14	12	25,4	46,4	25,5	15,3	0,655	3 200	**FY 35 TR**
1 1/2	38,5	14	49,2	115,9	101,5	130	14	12	30,2	54,2	30,7	19	0,8	4 800	**FY 1.1/2 TF**
	36	14	49,2	115,9	102	130	16	14	30,2	51,2	30,7	19	0,8	4 800	**FYJ 1.1/2 TF**
40	38,5	14	49,2	115,9	101,5	130	14	12	30,2	54,2	30,7	19	0,8	4 800	**FY 40 TF**
	36	14	49,2	115,9	102	130	16	14	30,2	51,2	30,7	19	0,8	4 800	**FYJ 40 TF**
	38,5	14	49,2	115,9	101,5	130	14	12	30,2	54,2	30,7	19	0,8	2 800	**FY 40 TR**

rgab.ru Берг АБ bergab@ya.ru Тел. (495)-228-06-21, факс (495) 22

rgab.ru Берг АБ bergab@ya.ru Тел. (495)-228-06-21, факс (495) 22

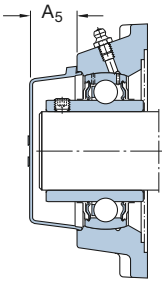

Designations Bearing unit	Separate components Bearing	Housing	**Mass** Bearing unit	**Appropriate end cover** Designation	Dimension A_5
–			kg	–	mm
FY 12 TF	YAR 203/12-2F	FY 503 M	0,47	–	–
FY 15 TF	YAR 203/15-2F	FY 503 M	0,45	–	–
FY 17 TF	YAR 203-2F	FY 503 M	0,44	–	–
FY 3/4 TF	YAR 204-012-2F	FY 504 M	0,61	ECY 204	18,5
FYJ 3/4 TF	YAR 204-012-2F	FYJ 504	0,66	–	–
FY 20 TF	YAR 204-2F	FY 504 M	0,60	ECY 204	18,5
FYJ 20 TF	YAR 204-2F	FYJ 504	0,65	–	–
FY 20 TR	YAR 204-2RF	FY 504 M	0,60	ECY 204	18,5
FY 25 TF	YAR 205-2F	FY 505 M	0,77	ECY 205	18
FYJ 25 TF	YAR 205-2F	FYJ 505	0,86	–	–
FY 25 TR	YAR 205-2RF	FY 505 M	0,77	ECY 205	18
FY 1. TF	YAR 205-100-2F	FY 505 M	0,77	ECY 205	18
FYJ 1. TF	YAR 205-100-2F	FYJ 505	0,86	–	–
FY 30 TF	YAR 206-2F	FY 506 M	1,10	ECY 206	20
FYJ 30 TF	YAR 206-2F	FYJ 506	1,20	–	–
FY 30 TR	YAR 206-2RF	FY 506 M	1,10	ECY 206	20
FY 1.1/4 TF	YAR 207-104-2F	FY 507 M	1,45	ECY 207	22
FYJ 1.1/4 TF	YAR 207-104-2F	FYJ 507	1,55	–	–
FY 35 TF	YAR 207-2F	FY 507 M	1,40	ECY 207	22
FYJ 35 TF	YAR 207-2F	FYJ 507	1,50	–	–
FY 35 TR	YAR 207-2RF	FY 507 M	1,40	ECY 207	22
FY 1.1/2 TF	YAR 208-108-2F	FY 508 M	1,90	ECY 208	23,5
FYJ 1.1/2 TF	YAR 208-108-2F	FYJ 508	1,95	–	–
FY 40 TF	YAR 208-2F	FY 508 M	1,90	ECY 208	23,5
FYJ 40 TF	YAR 208-2F	FYJ 508	1,80	–	–
FY 40 TR	YAR 208-2RF	FY 508 M	1,90	ECY 208	23,5

rgab.ru Берг АБ bergab@ya.ru Тел. (495)-228-06-21, факс (495) 22

rgab.ru Берг АБ bergab@ya.ru Тел. (495)-228-06-21, факс (495) 22

Y-bearing flanged units with square cast housing and grub screws

d **45 – 100** mm
1 3/4 – 2 1/2 in

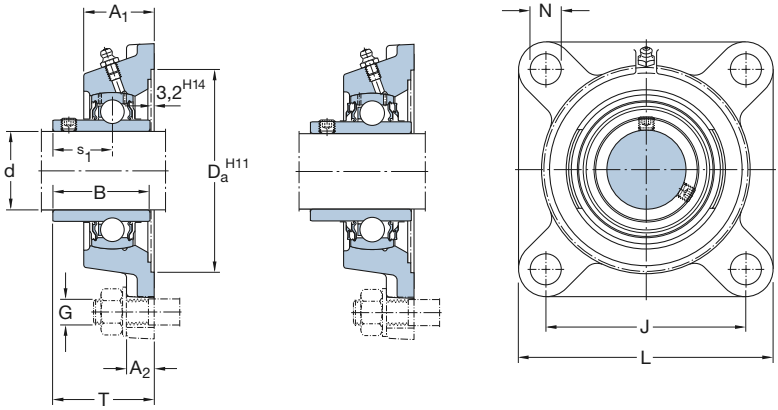

TF TR

Dimensions d	A_1	A_2	B	D_a	J	L	N	G	s_1	T	Basic load ratings dynamic C	static C_0	Fatigue load limit P_u	Limiting speed with shaft tolerance h6	Designation Bearing unit
mm/in											kN		kN	r/min	–
1 3/4	39	14	49,2	119,1	105	137	16	14	30,2	54,2	33,2	21,6	0,915	4 300	**FY 1.3/4 TF**
	38	16	49,2	119,1	105	137	16	14	30,2	52,2	33,2	21,6	0,915	4 300	**FYJ 1.3/4 TF**
45	39	14	49,2	119,1	105	137	16	14	30,2	54,2	33,2	21,6	0,915	4 300	**FY 45 TF**
	38	16	49,2	119,1	105	137	16	14	30,2	52,2	33,2	21,6	0,915	4 300	**FYJ 45 TF**
	39	14	49,2	119,1	105	137	16	14	30,2	54,2	33,2	21,6	0,915	2 400	**FY 45 TR**
50	43	15	51,6	125,4	111	143	18	16	32,6	60,6	35,1	23,2	0,98	4 000	**FY 50 TF**
	40	15	51,6	125,4	111	143	16	14	32,6	54,6	35,1	23,2	0,98	4 000	**FYJ 50 TF**
	43	15	51,6	125,4	111	143	18	16	32,6	60,6	35,1	23,2	0,98	2 200	**FY 50 TR**
2	47,5	16	55,6	150,8	130	162	18	16	33,4	64,4	43,6	29	1,25	3 600	**FY 2. TF**
	43	17	55,6	150,8	130	162	19	16	33,4	58,4	43,6	29	1,25	3 600	**FYJ 2. TF**
55	47,5	16	55,6	150,8	130	162	18	16	33,4	64,4	43,6	29	1,25	3 600	**FY 55 TF**
	43	17	55,6	150,8	130	162	19	16	33,4	58,4	43,6	29	1,25	3 600	**FYJ 55 TF**
	47,5	16	55,6	150,8	130	162	18	16	33,4	64,4	43,6	29	1,25	1 900	**FY 55 TR**
60	52	17	65,1	161,9	143	175	18	16	39,7	73,7	52,7	36	1,53	3 400	**FY 60 TF**
	48	18	65,1	161,9	143	175	19	16	39,7	68,7	52,7	36	1,53	3 400	**FYJ 60 TF**
	52	17	65,1	161,9	143	175	18	16	39,7	73,7	52,7	36	1,53	1 800	**FY 60 TR**
2 1/2	52,5	17	68,3	161,9	149,5	187	18	16	42,9	76,9	57,2	40	1,7	3 000	**FY 2.1/2 TF**
	50	22	68,3	161,9	149	187	19	16	42,9	72,9	57,2	40	1,7	3 000	**FYJ 2.1/2 TF**
65	52,5	17	68,3	161,9	149,5	187	18	16	42,9	76,9	57,2	40	1,7	3 000	**FY 65 TF**
	50	22	68,3	161,9	149	187	19	16	42,9	72,9	57,2	40	1,7	3 000	**FYJ 65 TF**
70	50,3	21,3	69,9	161,9	152	193	19	16	39,7	70,7	62,4	45	1,86	2 800	**FYJ 70 TF**
75	53,6	22,1	73,1	179,4	159	200	19	16	46,1	80,1	66,3	49	2,04	2 600	**FYJ 75 TF**
80	54,5	22	77,9	179,4	165	208	23	20	47,7	81,7	72,8	53	2,16	2 400	**FYJ 80 TF**
90	63,4	23,4	89	193,7	187	235	23	20	54	94	95,6	72	2,7	2 000	**FYJ 90 TF**
100	70	25	98,4	215,9	210	265	27	24	63,4	107,5	124	93	3,35	1 900	**FYJ 100 TF**

rgab.ru Берг АБ bergab@ya.ru Тел. (495)-228-06-21, факс (495) 22

rgab.ru Берг АБ bergab@ya.ru Тел. (495)-228-06-21, факс (495) 22

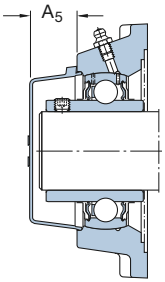

Designations Bearing unit	Separate components Bearing	Housing	**Mass** Bearings unit	**Appropriate end cover** Designation	Dimension A_5
–			kg	–	mm
FY 1.3/4 TF	YAR 209-112-2F	FY 509 M	2,15	ECY 209	23
FYJ 1.3/4 TF	YAR 209-112-2F	FYJ 509	2,50	–	–
FY 45 TF	YAR 209-2F	FY 509 M	2,10	ECY 209	23
FYJ 45 TF	YAR 209-2F	FYJ 509	2,45	–	–
FY 45 TR	YAR 209-2RF	FY 509 M	2,10	ECY 209	23
FY 50 TF	YAR 210-2F	FY 510 M	2,50	ECY 210	29,5
FYJ 50 TF	YAR 210-2F	FYJ 510	3,15	–	–
FY 50 TR	YAR 210-2RF	FY 510 M	2,50	ECY 210	29,5
FY 2. TF	YAR 211-200-2F	FY 511 M	3,75	ECY 211	34
FYJ 2. TF	YAR 211-200-2F	FYJ 511	3,60	–	–
FY 55 TF	YAR 211-2F	FY 511 M	3,60	ECY 211	34
FYJ 55 TF	YAR 211-2F	FYJ 511	3,45	–	–
FY 55 TR	YAR 211-2RF	FY 511 M	3,60	ECY 211	34
FY 60 TF	YAR 212-2F	FY 512 M	4,60	ECY 212	35,5
FYJ 60 TF	YAR 212-2F	FYJ 512	4,50	–	–
FY 60 TR	YAR 212-2RF	FY 512 M	4,60	ECY 212	35,5
FY 2.1/2 TF	YAR 213-208-2F	FY 513 M	5,40	ECY 213	35,5
FYJ 2.1/2 TF	YAR 213-208-2F	FYJ 513	5,90	–	–
FY 65 TF	YAR 213-2F	FY 513 M	5,30	ECY 213	35,5
FYJ 65 TF	YAR 213-2F	FYJ 513	5,80	–	–
FYJ 70 TF	YAR 214-2F	FYJ 514	6,00	–	–
FYJ 75 TF	YAR 215-2F	FYJ 515	6,80	–	–
FYJ 80 TF	YAR 216-2F	FYJ 516	7,60	–	–
FYJ 90 TF	YAR 218-2F	FYJ 518	11,5	–	–
FYJ 100 TF	YAR 220-2F	FYJ 520	15,2	–	–

rgab.ru Берг АБ bergab@ya.ru Тел. (495)-228-06-21, факс (495) 22

rgab.ru Берг АБ bergab@ya.ru Тел. (495)-228-06-21, факс (495) 22

Y-bearing flanged units with square cast housing and an eccentric locking collar

d **15 – 60** mm

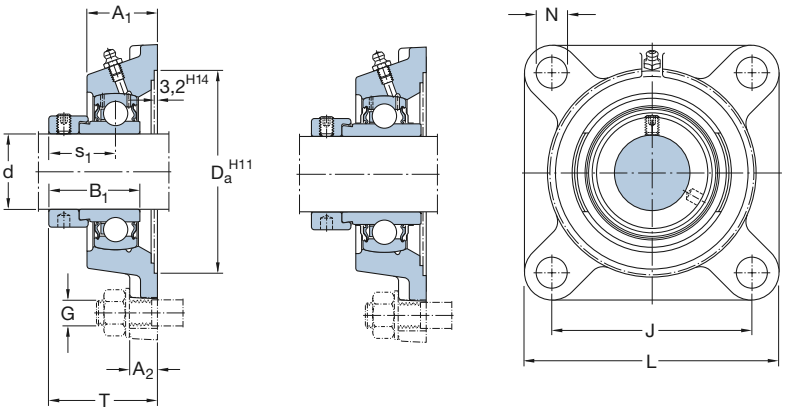

FM WF

Dimensions											Basic load ratings		Fatigue load limit	Limiting speed	Designation
											dynamic	static		with shaft tolerance h6	Bearing unit
d	A_1	A_2	B_1	D_a	J	L	N	G	s_1	T	C	C_0	P_u		
mm											kN		kN	r/min	–
15	26	11	28,6	55,6	54	76	11,5	10	22,1	39,1	9,56	4,75	0,2	9 500	**FY 15 FM**
17	26	11	28,6	55,6	54	76	11,5	10	22,1	39,1	9,56	4,75	0,2	9 500	**FY 17 FM**
20	29,5	11	31	68,3	63,5	86	11,5	10	23,5	42,5	12,7	6,55	0,28	8 500	**FY 20 FM**
	29,5	11	43,7	68,3	63,5	86	11,5	10	26,6	45,6	12,7	6,55	0,28	8 500	**FY 20 WF**
25	30	12	31	74,6	70	95	11,5	10	23,5	42,5	14	7,8	0,335	7 000	**FY 25 FM**
	30	12	44,4	74,6	70	95	11,5	10	26,9	45,6	14	7,8	0,335	7 000	**FY 25 WF**
30	32,5	13	35,7	93,7	82,5	108	11,5	10	26,7	46,7	19,5	11,2	0,475	6 300	**FY 30 FM**
	32,5	13	48,4	93,7	82,5	108	11,5	10	30,1	50,1	19,5	11,2	0,475	6 300	**FY 30 WF**
35	34,5	13	38,9	106,4	92	118	14	12	29,4	50,4	25,5	15,3	0,655	5 300	**FY 35 FM**
	34,5	13	51,1	106,4	92	118	14	12	32,3	53,3	25,5	15,3	0,655	5 300	**FY 35 WF**
40	38,5	14	43,7	115,9	101,5	130	14	12	32,7	56,7	30,7	19	0,8	4 800	**FY 40 FM**
	38,5	14	56,3	115,9	101,5	130	14	12	34,9	58,9	30,7	19	0,8	4 800	**FY 40 WF**
45	39	14	43,7	119,1	105	137	16	14	32,7	56,7	33,2	21,6	0,915	4 300	**FY 45 FM**
	39	14	56,3	119,1	105	137	16	14	34,9	58,9	33,2	21,6	0,915	4 300	**FY 45 WF**
50	43	15	43,7	125,4	111	143	18	16	32,7	60,7	35,1	23,2	0,98	4 000	**FY 50 FM**
	43	15	62,7	125,4	111	143	18	16	38,1	66,1	35,1	23,2	0,98	4 000	**FY 50 WF**
55	47,5	16	48,4	150,8	130	162	18	16	36,4	67,4	43,6	29	1,25	3 600	**FY 55 FM**
	47,5	16	71,4	150,8	130	162	18	16	43,6	74,6	43,6	29	1,25	3 600	**FY 55 WF**
60	52	17	53,1	161,9	143	175	18	16	39,6	73,6	52,7	36	1,53	3 400	**FY 60 FM**
	52	17	77,9	161,9	143	175	18	16	46,6	80,8	52,7	36	1,53	3 400	**FY 60 WF**

rgab.ru Берг АБ bergab@ya.ru Тел. (495)-228-06-21, факс (495) 22

rgab.ru Берг АБ bergab@ya.ru Тел. (495)-228-06-21, факс (495) 22

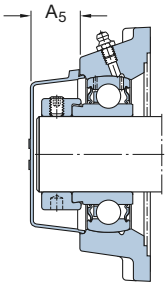

Designations Bearing unit	Separate components Bearing	Housing	**Mass** Bearing unit	**Appropriate end cover** Designation	Dimension A_5
–			kg	–	mm
FY 15 FM	YET 203/15	FY 503 M	0,50	–	–
FY 17 FM	YET 203	FY 503 M	0,48	–	–
FY 20 FM	YET 204	FY 504 M	0,62	ECY 204	18,5
FY 20 WF	YEL 204-2F	FY 504 M	0,65	ECY 204	18,5
FY 25 FM	YET 205	FY 505 M	0,78	ECY 205	18
FY 25 WF	YEL 205-2F	FY 505 M	0,83	ECY 205	18
FY 30 FM	YET 206	FY 506 M	1,10	ECY 206	20
FY 30 WF	YEL 206-2F	FY 506 M	1,20	ECY 206	20
FY 35 FM	YET 207	FY 507 M	1,50	ECY 207	22
FY 35 WF	YEL 207-2F	FY 507 M	1,55	ECY 207	22
FY 40 FM	YET 208	FY 508 M	1,95	ECY 208	23,5
FY 40 WF	YEL 208-2F	FY 508 M	2,05	ECY 208	23,5
FY 45 FM	YET 209	FY 509 M	2,15	ECY 209	23
FY 45 WF	YEL 209-2F	FY 509 M	2,25	ECY 209	23
FY 50 FM	YET 210	FY 510 M	2,55	ECY 210	29,5
FY 50 WF	YEL 210-2F	FY 510 M	2,70	ECY 210	29,5
FY 55 FM	YET 211	FY 511 M	3,60	ECY 211	34
FY 55 WF	YEL 211-2F	FY 511 M	3,85	ECY 211	34
FY 60 FM	YET 212	FY 512 M	4,70	ECY 212	35,5
FY 60 WF	YEL 212-2F	FY 512 M	5,00	ECY 212	35,5

rgab.ru Берг АБ bergab@ya.ru Тел. (495)-228-06-21, факс (495) 22

rgab.ru Берг АБ bergab@ya.ru Тел. (495)-228-06-21, факс (495) 22

Y-bearing flanged units with square cast housing and an adapter sleeve

d **20 – 50** mm
3/4 – 2 in

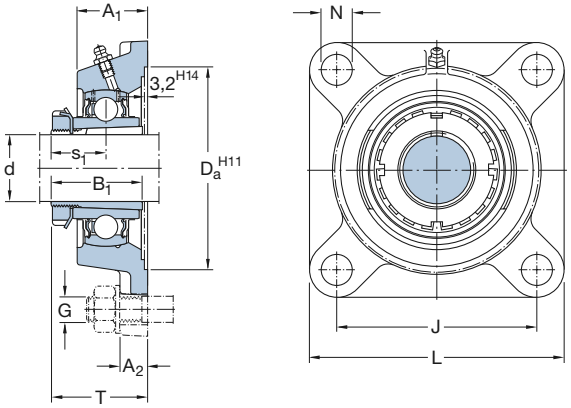

Dimensions											Basic load ratings		Fatigue load limit	Designations[1]	
											dynamic	static		Bearing unit	Adapter sleeve
d	A_1	A_2	B_1	D_a	J	L	N	G	s_1	T	C	C_0	P_u		
mm/in											kN		kN	–	
3/4	27	12	35	74,6	70	95	12	10	20	36	14	7,8	0,335	**FYJ 25 KF**	**HE 2305**
20	27	12	35	74,6	70	95	12	10	20	36	14	7,8	0,335	**FYJ 25 KF**	**H 2305**
15/16	31	13	38	93,7	83	108	12	10	22	40	19,5	11,2	0,475	**FYJ 30 KF**	**HA 2306**
25	31	13	38	93,7	83	108	12	10	22	40	19,5	11,2	0,475	**FYJ 30 KF**	**H 2306**
1	31	13	38	93,7	83	108	12	10	22	40	19,5	11,2	0,475	**FYJ 30 KF**	**HE 2306**
30	34	13	43	106,4	92	117	14	12	24,3	43,3	25,5	15,3	0,655	**FYJ 35 KF**	**H 2307**
1 3/16	34	13	43	106,4	92	117	14	12	24,3	43,3	25,5	15,3	0,655	**FYJ 35 KF**	**HA 2307**
1 1/4	36	14	46	115,9	102	130	16	14	27	48	30,7	19	0,8	**FYJ 40 KF**	**HE 2308**
35	36	14	46	115,9	102	130	16	14	27	48	30,7	19	0,8	**FYJ 40 KF**	**H 2308**
1 7/16	38	16	50	119,1	105	137	16	14	28,5	50,5	33,2	21,6	0,915	**FYJ 45 KF**	**HA 2309**
2 1/2	38	16	50	119,1	105	137	16	14	28,5	50,5	33,2	21,6	0,915	**FYJ 45 KF**	**HE 2309**
40	38	16	50	119,1	105	137	16	14	28,5	50,5	33,2	21,6	0,915	**FYJ 45 KF**	**H 2309**
1 5/8	40	15	55	125,4	111	143	16	14	30,5	52,5	35,1	23,2	0,98	**FYJ 50 KF**	**HS 2310**
1 11/16	40	15	55	125,4	111	143	16	14	30,5	52,5	35,1	23,2	0,98	**FYJ 50 KF**	**HA 2310**
1 3/4	40	15	55	125,4	111	143	16	14	30,5	52,5	35,1	23,2	0,98	**FYJ 50 KF**	**HE 2310**
45	40	15	55	125,4	111	143	16	14	30,5	52,5	35,1	23,2	0,98	**FYJ 50 KF**	**H 2310**
1 15/16	43	17	59	150,8	130	162	19	16	32,5	57,5	43,6	29	1,25	**FYJ 55 KF**	**HA 2311**
50	43	17	59	150,8	130	162	19	16	32,5	57,5	43,6	29	1,25	**FYJ 55 KF**	**H 2311**
2	43	17	59	150,8	130	162	19	16	32,5	57,5	43,6	29	1,25	**FYJ 55 KF**	**HE 2311 B**

[1] Bearing unit and sleeve to be ordered separately

rgab.ru Берг АБ bergab@ya.ru Тел. (495)-228-06-21, факс (495) 22

rgab.ru Берг АБ bergab@ya.ru Тел. (495)-228-06-21, факс (495) 22

Desigantions Bearing unit without adapter sleeve	Separate components Bearing	Housing	**Limiting speed**	**Mass** Unit with adapter sleeve
–			r/min	kg
FYJ 25 KF	YSA 205-2FK	FYJ 505	7 000	0,73
FYJ 25 KF	YSA 205-2FK	FYJ 505	7 000	0,73
FYJ 30 KF	YSA 206-2FK	FYJ 506	6 300	1,07
FYJ 30 KF	YSA 206-2FK	FYJ 506	6 300	1,05
FYJ 30 KF	YSA 206-2FK	FYJ 506	6 300	1,05
FYJ 35 KF	YSA 207-2FK	FYJ 507	5 300	1,35
FYJ 35 KF	YSA 207-2FK	FYJ 507	5 300	1,35
FYJ 40 KF	YSA 208-2FK	FYJ 508	4 800	1,75
FYJ 40 KF	YSA 208-2FK	FYJ 508	4 800	1,75
FYJ 45 KF	YSA 209-2FK	FYJ 509	4 300	2,15
FYJ 45 KF	YSA 209-2FK	FYJ 509	4 300	2,10
FYJ 45 KF	YSA 209-2FK	FYJ 509	4 300	2,10
FYJ 50 KF	YSA 210-2FK	FYJ 510	4 000	2,86
FYJ 50 KF	YSA 210-2FK	FYJ 510	4 000	2,83
FYJ 50 KF	YSA 210-2FK	FYJ 510	4 000	2,80
FYJ 50 KF	YSA 210-2FK	FYJ 510	4 000	2,80
FYJ 55 KF	YSA 211-2FK	FYJ 511	3 600	3,60
FYJ 55 KF	YSA 211-2FK	FYJ 511	3 600	3,60
FYJ 55 KF	YSA 211-2FK	FYJ 511	3 600	3,60

rgab.ru Берг АБ bergab@ya.ru Тел. (495)-228-06-21, факс (495) 22

rgab.ru Берг АБ bergab@ya.ru Тел. (495)-228-06-21, факс (495) 22

Y-bearing flanged units with square cast housing and an adapter sleeve

d **55 – 60** mm
2 1/8 – 2 3/8 in

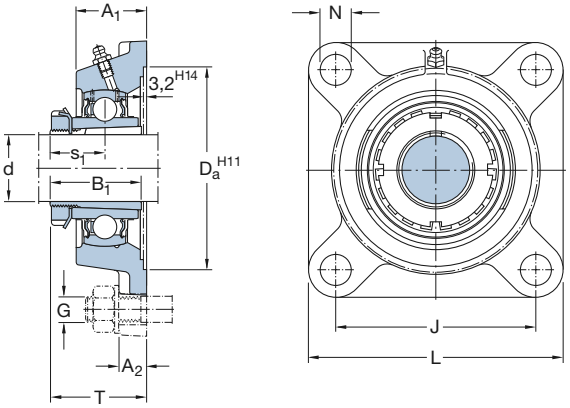

Dimensions											Basic load ratings		Fatigue load limit	Designations[1]	
											dynamic	static		Bearing unit	Adapter sleeve
d	A_1	A_2	B_1	D_a	J	L	N	G	s_1	T	C	C_0	P_u		
mm/in											kN		kN	–	
2 1/8	48	18	62	161,9	143	175	19	16	34,3	63,3	52,7	36	1,53	**FYJ 60 KF**	**HS 2312**
55	48	18	62	161,9	143	175	19	16	34,3	63,3	52,7	36	1,53	**FYJ 60 KF**	**H 2312**
2 3/16	50	22	65	161,9	149	187	19	16	35,8	65,8	57,2	40	1,7	**FYJ 65 KF**	**HA 2313**
2 1/4	50	22	65	161,9	149	187	19	16	35,8	65,8	57,2	40	1,7	**FYJ 65 KF**	**HE 2313**
60	50	22	65	161,9	149	187	19	16	35,8	65,8	57,2	40	1,7	**FYJ 65 KF**	**H 2313**
2 3/8	50	22	65	161,9	149	187	19	16	35,8	65,8	57,2	40	1,7	**FYJ 65 KF**	**HS 2313**

[1] Bearing unit and sleeve to be ordered separately

rgab.ru Берг АБ bergab@ya.ru Тел. (495)-228-06-21, факс (495) 22

rgab.ru Берг АБ bergab@ya.ru Тел. (495)-228-06-21, факс (495) 22

Designations Bearing unit without adapter sleeve	Separate components Bearing	Housing	**Limiting speed**	**Mass** Unit with adapter sleeve
–			r/min	kg
FYJ 60 KF	YSA 212-2FK	FYJ 512	3 400	4,60
FYJ 60 KF	YSA 212-2FK	FYJ 512	3 400	4,60
FYJ 65 KF	YSA 213-2FK	FYJ 513	3 000	6,20
FYJ 65 KF	YSA 213-2FK	FYJ 513	3 000	6,10
FYJ 65 KF	YSA 213-2FK	FYJ 513	3 000	6,00
FYJ 65 KF	YSA 213-2FK	FYJ 513	3 000	6,00

rgab.ru Берг АБ bergab@ya.ru Тел. (495)-228-06-21, факс (495) 22

rgab.ru Берг АБ bergab@ya.ru Тел. (495)-228-06-21, факс (495) 22

Y-bearing flanged units with oval cast housing and grub screws

d **12 – 35** mm
3/4 – 1 1/2 in

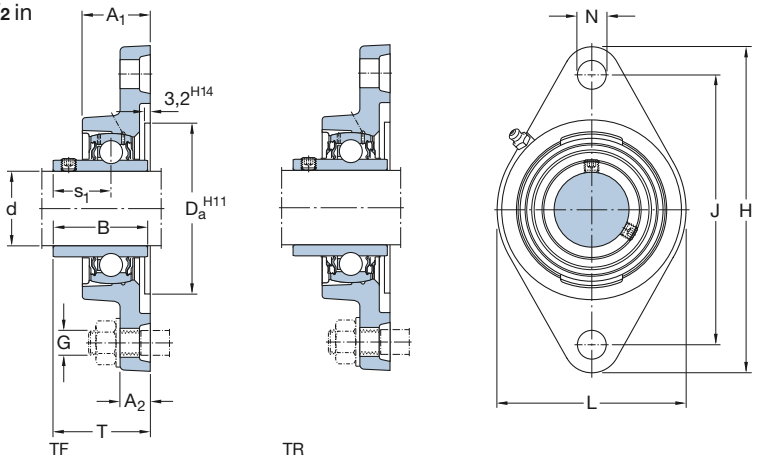

Dimensions												Basic load ratings		Fatigue load limit	Limiting speed	Designation
												dynamic	static		with shaft tolerance h6	Bearing unit
d	A_1	A_2	B	D_a	H	J	L	N	G	s_1	T	C	C_0	P_u		
mm/in												kN		kN	r/min	–
12	26	11	27,4	50,8	98,5	76,5	57	11,5	10	15,9	32,9	9,56	4,75	0,2	9 500	**FYTB 12 TF**
15	26	11	27,4	50,8	98,5	76,5	57	11,5	10	15,9	32,9	9,56	4,75	0,2	9 500	**FYTB 15 TF**
17	26	11	27,4	50,8	98,5	76,5	57	11,5	10	15,9	32,9	9,56	4,75	0,2	9 500	**FYTB 17 TF**
3/4	29,5	11	31	50,8	112	90	60,5	11,5	10	18,3	37,3	12,7	6,55	0,28	8 500	**FYTB 3/4 TF**
	25,5	12	31	50,8	112	90	60	12	10	18,3	33,3	12,7	6,55	0,28	8 500	**FYTJ 3/4 TF**
20	29,5	11	31	50,8	112	90	60,5	11,5	10	18,3	37,3	12,7	6,55	0,28	8 500	**FYTB 20 TF**
	25,5	12	31	50,8	112	90	60	12	10	18,3	33,3	12,7	6,55	0,28	8 500	**FYTJ 20 TF**
	29,5	11	31	50,8	112	90	60,5	11,5	10	18,3	37,3	12,7	6,55	0,28	5 000	**FYTB 20 TR**
25	30	12	34,1	63,5	124	99	70	11,5	10	19,8	38,8	14	7,8	0,335	7 000	**FYTB 25 TF**
	27	14	34,1	63,5	130	99	68	16	14	19,8	35,8	14	7,8	0,335	7 000	**FYTJ 25 TF**
	30	12	34,1	63,5	124	99	70	11,5	10	19,8	38,8	14	7,8	0,335	4 300	**FYTB 25 TR**
1	30	12	34,1	63,5	124	99	70	11,5	10	19,8	38,8	14	7,8	0,335	7 000	**FYTB 1. TF**
	27	14	34,1	63,5	130	99	68	16	14	19,8	35,8	14	7,8	0,335	7 000	**FYTJ 1. TF**
30	32,5	13	38,1	76,2	141,5	116,5	83	11,5	10	22,2	42,2	19,5	11,2	0,475	6 300	**FYTB 30 TF**
	30,5	13,5	38,1	76,2	148	117	80	16	14	22,2	40,2	19,5	11,2	0,475	6 300	**FYTJ 30 TF**
	32,5	13	38,1	76,2	141,5	116,5	83	11,5	10	22,2	42,2	19,5	11,2	0,475	3 800	**FYTB 30 TR**
1 1/4	34,5	13	42,9	88,9	156	130	96	14	12	25,4	46,4	25,5	15,3	0,655	5 300	**FYTB 1.1/4 TF**
	34	16	42,9	88,9	161	130	96	16	14	25,4	44,4	25,5	15,3	0,655	5 300	**FYTJ 1.1/4 TF**
35	34,5	13	42,9	88,9	156	130	96	14	12	25,4	46,4	25,5	15,3	0,655	5 300	**FYTB 35 TF**
	34	16	42,9	88,9	161	130	96	16	14	25,4	44,4	25,5	15,3	0,655	5 300	**FYTJ 35 TF**
	34,5	13	42,9	88,9	156	130	96	14	12	25,4	46,4	25,5	15,3	0,655	3 200	**FYTB 35 TR**
1 1/2	38,5	14	49,2	88,9	171,5	143,5	102	14	12	30,2	54,2	30,7	19	0,8	4 800	**FYTB 1.1/2 TF**
	36	16	49,2	88,9	175	144	100	16	14	30,2	51,2	30,7	19	0,8	4 800	**FYTJ 1.1/2 TF**

rgab.ru Берг АБ bergab@ya.ru Тел. (495)-228-06-21, факс (495) 22

rgab.ru Берг АБ bergab@ya.ru Тел. (495)-228-06-21, факс (495) 22

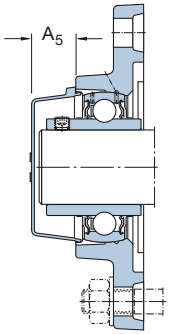

Designations Bearing unit	Separate components Bearing	Housing	**Mass** Bearing unit	**Appropriate end cover** Designation	Dimension A_5
–			kg	–	mm
FYTB 12 TF	YAR 203/12-2F	FYTB 503 M	0,42	–	–
FYTB 15 TF	YAR 203/15-2F	FYTB 503 M	0,40	–	–
FYTB 17 TF	YAR 203-2F	FYTB 503 M	0,39	–	–
FYTB 3/4 TF	YAR 204-012-2F	FYTB 504 M	0,50	ECY 204	18,5
FYTJ 3/4 TF	YAR 204-012-2F	FYTJ 504	0,43	–	–
FYTB 20 TF	YAR 204-2F	FYTB 504 M	0,50	ECY 204	18,5
FYTJ 20 TF	YAR 204-2F	FYTJ 504	0,43	–	–
FYTB 20 TR	YAR 204-2RF	FYTB 504 M	0,50	ECY 204	18,5
FYTB 25 TF	YAR 205-2F	FYTB 505 M	0,63	ECY 205	18
FYTJ 25 TF	YAR 205-2F	FYTJ 505	0,58	–	–
FYTB 25 TR	YAR 205-2RF	FYTB 505 M	0,63	ECY 205	18
FYTB 1. TF	YAR 205-100-2F	FYTB 505 M	0,63	ECY 205	18
FYTJ 1. TF	YAR 205-100-2F	FYTJ 505	0,58	–	–
FYTB 30 TF	YAR 206-2F	FYTB 506 M	0,93	ECY 206	20
FYTJ 30 TF	YAR 206-2F	FYTJ 506	0,93	–	–
FYTB 30 TR	YAR 206-2RF	FYTB 506 M	0,93	ECY 206	20
FYTB 1.1/4 TF	YAR 207-104-2F	FYTB 507 M	1,40	ECY 207	22
FYTJ 1.1/4 TF	YAR 207-104-2F	FYTJ 507	1,30	–	–
FYTB 35 TF	YAR 207-2F	FYTB 507 M	1,25	ECY 207	22
FYTJ 35 TF	YAR 207-2F	FYTJ 507	1,15	–	–
FYTB 35 TR	YAR 207-2RF	FYTB 507 M	1,25	ECY 207	22
FYTB 1.1/2 TF	YAR 208-108-2F	FYTB 508 M	1,70	ECY 208	23,5
FYTJ 1.1/2 TF	YAR 208-108-2F	FYTJ 508	1,60	–	–

rgab.ru Берг АБ bergab@ya.ru Тел. (495)-228-06-21, факс (495) 22

rgab.ru Берг АБ bergab@ya.ru Тел. (495)-228-06-21, факс (495) 22

Y-bearing flanged units with oval cast housing and grub screws

d **40 – 50** mm

1 3/4 in

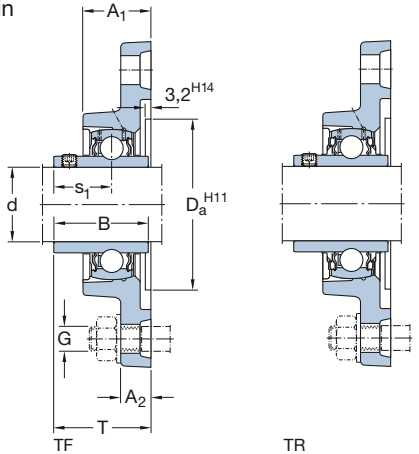

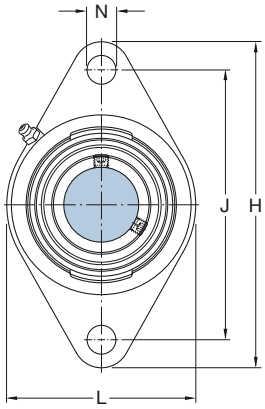

Dimensions												Basic load ratings		Fatigue load limit	Limiting speed	Designation
												dynamic	static		with shaft tolerance h6	Bearing unit
d	A_1	A_2	B	D_a	H	J	L	N	G	s_1	T	C	C_0	P_u		
mm/in												kN		kN	r/min	–
40	38,5	14	49,2	88,9	171,5	143,5	102	14	12	30,2	54,2	30,7	19	0,8	4 800	**FYTB 40 TF**
	36	16	49,2	88,9	175	144	100	16	14	30,2	51,2	30,7	19	0,8	4 800	**FYTJ 40 TF**
	38,5	14	49,2	88,9	171,5	143,5	102	14	12	30,2	54,2	30,7	19	0,8	2 800	**FYTB 40 TR**
1 3/4	39	14	49,2	98,4	178,5	148,5	111	16	14	30,2	54,2	33,2	21,6	0,915	4 300	**FYTB 1.3/4 TF**
	38	18	49,2	98,4	188	148	108	19	16	30,2	52,2	33,2	21,6	0,915	4 300	**FYTJ 1.3/4 TF**
45	39	14	49,2	98,4	178,5	148,5	111	16	14	30,2	54,2	33,2	21,6	0,915	4 300	**FYTB 45 TF**
	38	18	49,2	98,4	188	148	108	19	16	30,2	52,2	33,2	21,6	0,915	4 300	**FYTJ 45 TF**
	39	14	49,2	98,4	178,5	148,5	111	16	14	30,2	54,2	33,2	21,6	0,915	2 400	**FYTB 45 TR**
50	43	15	51,6	101,6	189	157	116	18	16	32,6	60,6	35,1	23,2	0,98	4 000	**FYTB 50 TF**
	40	18	51,6	101,6	195	157	115	19	16	32,6	54,6	35,1	23,2	0,98	4 000	**FYTJ 50 TF**
	43	15	51,6	101,6	189	157	116	18	16	32,6	60,6	35,1	23,2	0,98	2 200	**FYTB 50 TR**

rgab.ru Берг АБ bergab@ya.ru Тел. (495)-228-06-21, факс (495) 22

rgab.ru Берг АБ bergab@ya.ru Тел. (495)-228-06-21, факс (495) 22

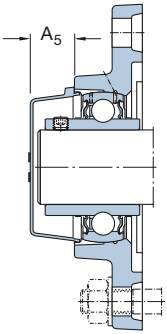

Designations Bearing unit	Separate components Bearing	Housing	**Mass** Bearing unit	**Appropriate end cover** Designation	Dimension A_5
–			kg	–	mm
FYTB 40 TF	YAR 208-2F	FYTB 508 M	1,65	ECY 208	23,5
FYTJ 40 TF	YAR 208-2F	FYTJ 508	1,55	–	–
FYTB 40 TR	YAR 208-2RF	FYTB 508 M	1,65	ECY 208	23,5
FYTB 1.3/4 TF	YAR 209-112-2F	FYTB 509 M	1,80	ECY 209	23
FYTJ 1.3/4 TF	YAR 209-112-2F	FYTJ 509	2,20	–	–
FYTB 45 TF	YAR 209-2F	FYTB 509 M	1,80	ECY 209	23
FYTJ 45 TF	YAR 209-2F	FYTJ 509	2,20	–	–
FYTB 45 TR	YAR 209-2RF	FYTB 509 M	1,80	ECY 209	23
FYTB 50 TF	YAR 210-2F	FYTB 510 M	2,15	ECY 210	29,5
FYTJ 50 TF	YAR 210-2F	FYTJ 510	3,10	–	–
FYTB 50 TR	YAR 210-2RF	FYTB 510 M	2,15	ECY 210	29,5

rgab.ru Берг АБ bergab@ya.ru Тел. (495)-228-06-21, факс (495) 22

rgab.ru Берг АБ bergab@ya.ru Тел. (495)-228-06-21, факс (495) 22

Y-bearing flanged units with an oval cast housing and an eccentric locking collar

d **15 – 50** mm

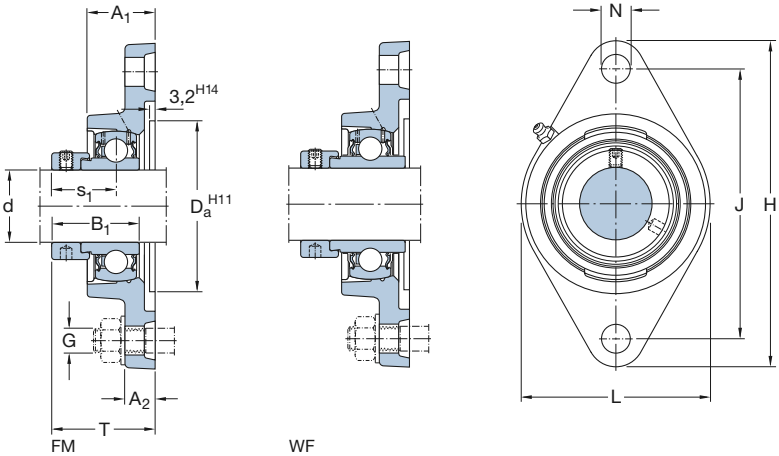

Dimensions												Basic load ratings		Fatigue load limit	Limiting speed	Designation
												dynamic	static		with shaft tolerance h6	Bearing unit
d	A_1	A_2	B_1	D_a	H	J	L	N	G	s_1	T	C	C_0	P_u		
mm												kN		kN	r/min	–
15	26	11	28,6	50,8	98,5	76,5	57	11,5	10	22,1	39,1	9,56	4,75	0,2	9 500	**FYTB 15 FM**
17	26	11	28,6	50,8	98,5	76,5	57	11,5	10	22,1	39,1	9,56	4,75	0,2	9 500	**FYTB 17 FM**
20	29,5	11	31	50,8	112	90	60,5	11,5	10	23,5	42,5	12,7	6,55	0,28	8 500	**FYTB 20 FM**
	29,5	11	43,7	50,8	112	90	60,5	11,5	10	26,6	45,6	12,7	6,55	0,28	8 500	**FYTB 20 WF**
25	30	12	31	63,5	124	99	70	11,5	10	23,5	42,5	14	7,8	0,335	7 000	**FYTB 25 FM**
	30	12	44,4	63,5	124	99	70	11,5	10	26,9	45,9	14	7,8	0,335	7 000	**FYTB 25 WF**
30	32,5	13	35,7	76,2	141,5	116,5	83	11,5	10	26,7	46,7	19,5	11,2	0,475	6 300	**FYTB 30 FM**
	32,5	13	48,4	76,2	141,5	116,5	83	11,5	10	30,1	50,1	19,5	11,2	0,475	6 300	**FYTB 30 WF**
35	34,5	13	38,9	88,9	156	130	96	14	12	29,4	50,4	25,5	15,3	0,655	5 300	**FYTB 35 FM**
	34,5	13	51,1	88,9	156	130	96	14	12	32,3	53,3	25,5	15,3	0,655	5 300	**FYTB 35 WF**
40	38,5	14	43,7	88,9	171,5	143,5	102	14	12	32,7	56,7	30,7	19	0,8	4 800	**FYTB 40 FM**
	38,5	14	56,3	88,9	171,5	143,5	102	14	12	34,9	58,9	30,7	19	0,8	4 800	**FYTB 40 WF**
45	39	14	43,7	98,4	178,5	148,5	111	16	14	32,7	56,7	33,2	21,6	0,915	4 300	**FYTB 45 FM**
	39	14	56,3	98,4	178,5	148,5	111	16	14	34,9	58,9	33,2	21,6	0,915	4 300	**FYTB 45 WF**
50	43	15	43,7	101,6	189	157	116	18	16	32,7	60,7	35,1	23,2	0,98	4 000	**FYTB 50 FM**
	43	15	62,7	101,6	189	157	116	18	16	38,1	66,1	35,1	23,2	0,98	4 000	**FYTB 50 WF**

rgab.ru Берг АБ bergab@ya.ru Тел. (495)-228-06-21, факс (495) 22

rgab.ru Берг АБ bergab@ya.ru Тел. (495)-228-06-21, факс (495) 22

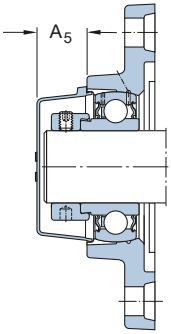

Dimensions Bearing unit	Separate components Bearing	Housing	**Mass** Bearing unit	**Appropriate end cover** Designation	Dimension A_5
–			kg	–	mm
FYTB 15 FM	YET 203/15	FYTB 503 M	0,42	–	–
FYTB 17 FM	YET 203	FYTB 503 M	0,41	–	–
FYTB 20 FM	YET 204	FYTB 504 M	0,52	ECY 204	18,5
FYTB 20 WF	YEL 204-2F	FYTB 504 M	0,55	ECY 204	18,5
FYTB 25 FM	YET 205	FYTB 505 M	0,64	ECY 205	18
FYTB 25 WF	YEL 205-2F	FYTB 505 M	0,69	ECY 205	18
FYTB 30 FM	YET 206	FYTB 506 M	0,95	ECY 206	20
FYTB 30 WF	YEL 206-2F	FYTB 506 M	1,00	ECY 206	20
FYTB 35 FM	YET 207	FYTB 507 M	1,30	ECY 207	22
FYTB 35 WF	YEL 207-2F	FYTB 507 M	1,40	ECY 207	22
FYTB 40 FM	YET 208	FYTB 508 M	1,70	ECY 208	23,5
FYTB 40 WF	YEL 208-2F	FYTB 508 M	1,80	ECY 208	23,5
FYTB 45 FM	YET 209	FYTB 509 M	1,85	ECY 209	23
FYTB 45 WF	YEL 209-2F	FYTB 509 M	1,95	ECY 209	23
FYTB 50 FM	YET 210	FYTB 510 M	2,20	ECY 210	29,5
FYTB 50 WF	YEL 210-2F	FYTB 510 M	2,35	ECY 210	29,5

rgab.ru Берг АБ bergab@ya.ru Тел. (495)-228-06-21, факс (495) 22

rgab.ru Берг АБ bergab@ya.ru Тел. (495)-228-06-21, факс (495) 22

Y-bearing flanged units with an oval cast housing and an adapter sleeve

d **20 – 45** mm
3/4 – 1 3/4 in

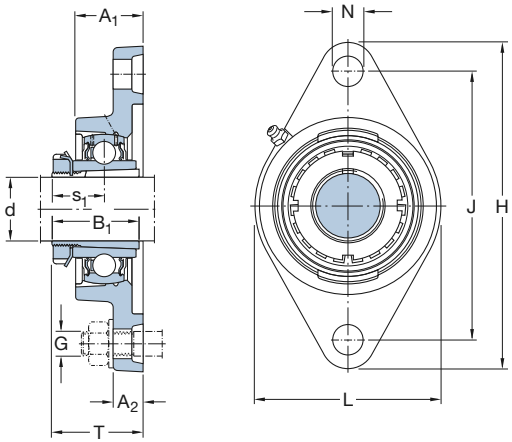

Dimensions											Basic load ratings		Fatigue load limit	Designations[1]	
											dynamic	static		Bearing unit	Adapter sleeve
d	A_1	A_2	B_1	D_a	H	J	L	N	G	s_1	T	C	C_0	P_u		
mm/in												kN		kN	–	
3/4	27	14	35	63,5	130	99	68	16	14	20	36	14	7,8	0,335	**FYTJ 25 KF**	**HE 2305**
20	27	14	35	63,5	130	99	68	16	14	20	36	14	7,8	0,335	**FYTJ 25 KF**	**H 2305**
15/16	30,5	13,5	38	76,2	148	117	80	16	14	22	40	19,5	11,2	0,475	**FYTJ 30 KF**	**HA 2306**
25	30,5	13,5	38	76,2	148	117	80	16	14	22	40	19,5	11,2	0,475	**FYTJ 30 KF**	**H 2306**
1	30,5	13,5	38	76,2	148	117	80	16	14	22	40	19,5	11,2	0,475	**FYTJ 30 KF**	**HE 2306**
30	34	16	43	88,9	161	130	96	16	14	24,3	43,3	25,5	15,3	0,655	**FYTJ 35 KF**	**H 2307**
1 3/16	34	16	43	88,9	161	130	96	16	14	24,3	43,3	25,5	15,3	0,655	**FYTJ 35 KF**	**HA 2307**
1 1/4	36	16	46	88,9	175	144	100	16	14	27	48	30,7	19	0,8	**FYTJ 40 KF**	**HE 2308**
35	36	16	46	88,9	175	144	100	16	14	27	48	30,7	19	0,8	**FYTJ 40 KF**	**H 2308**
1 7/16	38	18	50	98,4	188	148	108	19	16	28,5	50,5	33,2	21,6	0,915	**FYTJ 45 KF**	**HA 2309**
1 1/2	38	18	50	98,4	188	148	108	19	16	28,5	50,5	33,2	21,6	0,915	**FYTJ 45 KF**	**HE 2309**
40	38	18	50	98,4	188	148	108	19	16	28,5	50,5	33,2	21,6	0,915	**FYTJ 45 KF**	**H 2309**
1 5/8	40	18	55	101,6	195	157	115	19	16	30,5	52,5	35,1	23,2	0,98	**FYTJ 50 KF**	**HS 2310**
1 11/16	40	18	55	101,6	195	157	115	19	16	30,5	52,5	35,1	23,2	0,98	**FYTJ 50 KF**	**HA 2310**
1 3/4	40	18	55	101,6	195	157	115	19	16	30,5	52,5	35,1	23,2	0,98	**FYTJ 50 KF**	**HE 2310**
45	40	18	55	101,6	195	157	115	19	16	30,5	52,5	35,1	23,2	0,98	**FYTJ 50 KF**	**H 2310**

[1] Bearing unit and sleeve to be ordered separately

rgab.ru Берг АБ bergab@ya.ru Тел. (495)-228-06-21, факс (495) 22

rgab.ru Берг АБ bergab@ya.ru Тел. (495)-228-06-21, факс (495) 22

Designations Bearing unit without adapter sleeve	Separate components Bearing	Housing	**Limiting speed**	**Mass** Unit with adapter sleeve
–			r/min	kg
FYTJ 25 KF	YSA 205-2FK	FYTJ 505	7 000	0,72
FYTJ 25 KF	YSA 205-2FK	FYTJ 505	7 000	0,72
FYTJ 30 KF	YSA 206-2FK	FYTJ 506	6 300	0,83
FYTJ 30 KF	YSA 206-2FK	FYTJ 506	6 300	0,83
FYTJ 30 KF	YSA 206-2FK	FYTJ 506	6 300	0,83
FYTJ 35 KF	YSA 207-2FK	FYTJ 507	5 300	1,30
FYTJ 35 KF	YSA 207-2FK	FYTJ 507	5 300	1,30
FYTJ 40 KF	YSA 208-2FK	FYTJ 508	4 800	1,65
FYTJ 40 KF	YSA 208-2FK	FYTJ 508	4 800	1,65
FYTJ 45 KF	YSA 209-2FK	FYTJ 509	4 300	2,20
FYTJ 45 KF	YSA 209-2FK	FYTJ 509	4 300	2,20
FYTJ 45 KF	YSA 209-2FK	FYTJ 509	4 300	2,20
FYTJ 50 KF	YSA 210-2FK	FYTJ 510	4 000	2,55
FYTJ 50 KF	YSA 210-2FK	FYTJ 510	4 000	2,55
FYTJ 50 KF	YSA 210-2FK	FYTJ 510	4 000	2,55
FYTJ 50 KF	YSA 210-2FK	FYTJ 510	4 000	2,55

rgab.ru Берг АБ bergab@ya.ru Тел. (495)-228-06-21, факс (495) 22

rgab.ru Берг АБ bergab@ya.ru Тел. (495)-228-06-21, факс (495) 22

Y-bearing flanged units with round cast housing and grub screws

d **20 – 65** mm

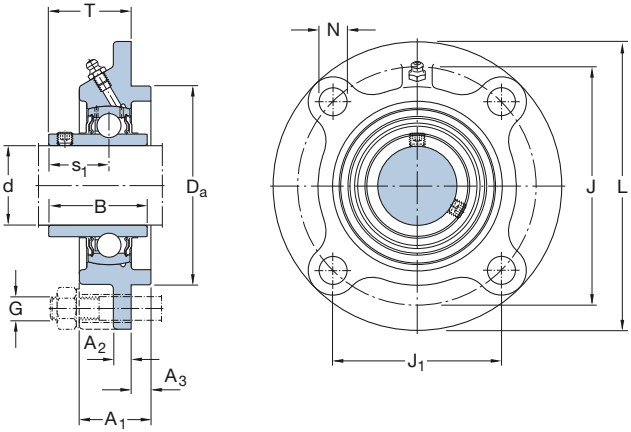

Dimesions													Basic load ratings		Fatigue load limit	Limiting speed	Designation
													dynamic	static		with shaft tolerance	Bearing unit
d	A_1	A_2	A_3	B	D_a h8	J	J_1	L	N	G	s_1	T	C	C_0	P_u	h6	
mm													kN		kN	r/min	–
20	25,5	7	5	31	62	78	55,2	100	12	10	18,3	28,3	12,7	6,55	0,28	8 500	**FYC 20 TF**
25	27	7	6	34,1	70	90	63,6	115	12	10	19,8	29,8	14	7,8	0,335	7 000	**FYC 25 TF**
30	31	8	8	38,1	80	100	70,7	125	12	10	22,2	32,2	19,5	11,2	0,475	6 300	**FYC 30 TF**
35	34	9	8	42,9	90	110	77,8	135	14	12	25,4	36,4	25,5	15,3	0,655	5 300	**FYC 35 TF**
40	36	9	10	49,2	100	120	84,9	145	14	12	30,2	41,2	30,7	19	0,8	4 800	**FYC 40 TF**
45	38	14	12	49,2	105	132	93,3	160	16	14	30,2	40,2	33,2	21,6	0,915	4 300	**FYC 45 TF**
50	40	14	12	51,6	110	138	97,6	165	16	14	32,6	42,6	35,1	23,2	0,98	4 000	**FYC 50 TF**
55	43	15	12	55,6	125	150	106,1	185	19	16	33,4	46,4	43,6	29	1,25	3 600	**FYC 55 TF**
60	48	15	12	65,1	135	160	113,1	195	19	16	39,7	56,7	52,7	36	1,53	3 400	**FYC 60 TF**
65	50	15	14	68,3	145	170	120,2	205	19	16	42,9	58,9	55,9	40,5	1,73	3 000	**FYC 65 TF**

rgab.ru Берг АБ bergab@ya.ru Тел. (495)-228-06-21, факс (495) 22

rgab.ru Берг АБ bergab@ya.ru Тел. (495)-228-06-21, факс (495) 22

Designations Bearing unit	Separate components Bearing	Housing	**Mass** Bearing unit
–			kg
FYC 20 TF	YAR 204-2F	FYC 504	0,70
FYC 25 TF	YAR 205-2F	FYC 505	0,93
FYC 30 TF	YAR 206-2F	FYC 506	1,35
FYC 35 TF	YAR 207-2F	FYC 507	1,55
FYC 40 TF	YAR 208-2F	FYC 508	2,00
FYC 45 TF	YAR 209-2F	FYC 509	2,65
FYC 50 TF	YAR 210-2F	FYC 510	2,80
FYC 55 TF	YAR 211-2F	FYC 511	4,30
FYC 60 TF	YAR 212-2F	FYC 512	4,90
FYC 65 TF	YAR 213-2F	FYC 513	5,70

rgab.ru Берг АБ bergab@ya.ru Тел. (495)-228-06-21, факс (495) 22

rgab.ru Берг АБ bergab@ya.ru Тел. (495)-228-06-21, факс (495) 22

Y-bearing flanged units with pressed steel housing and grub screws

d **12 – 25** mm
3/4 in

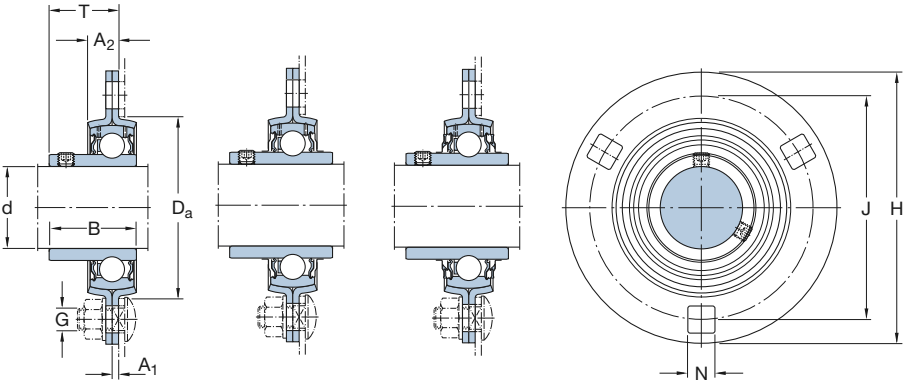

YAT YAR-2F YAR-2RF PF

Dimensions											Basic load ratings		Fatigue load limit	Permissible housing load	Designation
											dynamic	static		radial	No order designation
d	A_1	A_2	B	D_a	H	H_1/L	J	N	G	T	C	C_0	P_u		
mm/in											kN		kN	kN	–
12	2	7	27,4	49	81	–	63	7,1	6	17,9	9,56	4,75	0,2	2,5	PF 12 TF
	2	7	27,4	49	81	29	63	7,1	6	17,9	9,56	4,75	0,2	2,5	PFD 12 TF
	2	7	27,4	49	81	59	63	7,1	6	17,9	9,56	4,75	0,2	2,5	PFT 12 TF
15	2	7	27,4	49	81	–	63	7,1	6	17,9	9,56	4,75	0,2	2,5	PF 15 TF
	2	7	27,4	49	81	29	63	7,1	6	17,9	9,56	4,75	0,2	2,5	PFD 15 TF
	2	7	27,4	49	81	59	63	7,1	6	17,9	9,56	4,75	0,2	2,5	PFT 15 TF
17	2	7	22,1	49	81	–	63	7,1	6	17,9	9,56	4,75	0,2	2,5	PF 17 RM
	2	7	27,4	49	81	–	63	7,1	6	17,9	9,56	4,75	0,2	2,5	PF 17 TF
	2	7	22,1	49	81	29	63	7,1	6	17,9	9,56	4,75	0,2	2,5	PFD 17 RM
	2	7	27,4	49	81	29	63	7,1	6	17,9	9,56	4,75	0,2	2,5	PFD 17 TF
	2	7	22,1	49	81	59	63	7,1	6	17,9	9,56	4,75	0,2	2,5	PFT 17 RM
	2	7	27,4	49	81	59	63	7,1	6	17,9	9,56	4,75	0,2	2,5	PFT 17 TF
3/4	2	8	31	55	91	–	71,5	8,7	8	20,3	12,7	6,55	0,28	3,3	PF 3/4 TF
	2	8	31	55	91	–	71,5	8,7	8	20,3	12,7	6,55	0,28	3,3	PF 3/4 TR
	2	8	31	55	91	32	71,5	8,7	8	20,3	12,7	6,55	0,28	3,3	PFD 3/4 TF
	2	8	31	55	91	32	71,5	8,7	8	20,3	12,7	6,55	0,28	3,3	PFD 3/4 TR
	2	8	31	55	91	67	71,5	8,7	8	20,3	12,7	6,55	0,28	3,3	PFT 3/4 TF
	2	8	31	55	91	67	71,5	8,7	8	20,3	12,7	6,55	0,28	3,3	PFT 3/4 TR
20	2	8	25,5	55	91	–	71,5	8,7	8	20,3	12,7	6,55	0,28	3,3	PF 20 RM
	2	8	31	55	91	–	71,5	8,7	8	20,3	12,7	6,55	0,28	3,3	PF 20 TF
	2	8	31	55	91	–	71,5	8,7	8	20,3	12,7	6,55	0,28	3,3	PF 20 TR
	2	8	25,5	55	91	32	71,5	8,7	8	20,3	12,7	6,55	0,28	3,3	PFD 20 RM
	2	8	31	55	91	32	71,5	8,7	8	20,3	12,7	6,55	0,28	3,3	PFD 20 TF
	2	8	31	55	91	32	71,5	8,7	8	20,3	12,7	6,55	0,28	3,3	PFD 20 TR
	2	8	25,5	55	91	67	71,5	8,7	8	20,3	12,7	6,55	0,28	3,3	PFT 20 RM
	2	8	31	55	91	67	71,5	8,7	8	20,3	12,7	6,55	0,28	3,3	PFT 20 TF
	2	8	31	55	91	67	71,5	8,7	8	20,3	12,7	6,55	0,28	3,3	PFT 20 TR
25	2	9	27,2	60	95	–	76	8,7	8	21,5	14	7,8	0,335	3,6	PF 25 RM
	2	9	34,1	60	95	–	76	8,7	8	21,8	14	7,8	0,335	3,6	PF 25 TF
	2	9	34,1	60	95	–	76	8,7	8	21,8	14	7,8	0,335	3,6	PF 25 TR
	2	9	27,2	60	95	34	76	8,7	8	21,5	14	7,8	0,335	3,6	PFD 25 RM
	2	9	34,1	60	95	34	76	8,7	8	21,8	14	7,8	0,335	3,6	PFD 25 TF
	2	9	34,1	60	95	34	76	8,7	8	21,8	14	7,8	0,335	3,6	PFD 25 TR
	2	9	27,2	60	95	71	76	8,7	8	21,5	14	7,8	0,335	3,6	PFT 25 RM
	2	9	34,1	60	95	71	76	8,7	8	21,8	14	7,8	0,335	3,6	PFT 25 TF
	2	9	34,1	60	95	71	76	8,7	8	21,8	14	7,8	0,335	3,6	PFT 25 TR

rgab.ru Берг АБ bergab@ya.ru Тел. (495)-228-06-21, факс (495) 22

rgab.ru Берг АБ bergab@ya.ru Тел. (495)-228-06-21, факс (495) 22

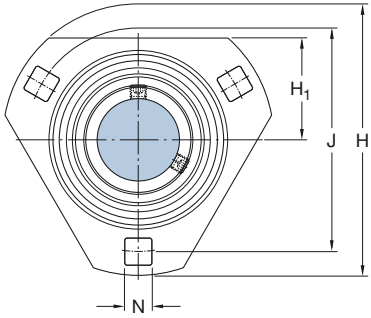

PFD

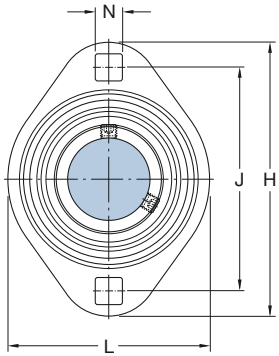

PFT

Designation No order designation	**Order designations** **Housing**	**Bearing**	**Mass** Bearing unit
–	–		kg
PF 12 TF	**PF 40**	**YAR 203/12-2F**	0,26
PFD 12 TF	**PFD 40**	**YAR 203/12-2F**	0,19
PFT 12 TF	**PFT 40**	**YAR 203/12-2F**	0,19
PF 15 TF	**PF 40**	**YAR 203/15-2F**	0,25
PFD 15 TF	**PFD 40**	**YAR 203/15-2F**	0,18
PFT 15 TF	**PFT 40**	**YAR 203/15-2F**	0,18
PF 17 RM	**PF 40**	**YAT 203**	0,22
PF 17 TF	**PF 40**	**YAR 203-2F**	0,24
PFD 17 RM	**PFD 40**	**YAT 203**	0,16
PFD 17 TF	**PFD 40**	**YAR 203-2F**	0,17
PFT 17 RM	**PFT 40**	**YAT 203**	0,16
PFT 17 TF	**PFT 40**	**YAR 203-2F**	0,17
PF 3/4 TF	**PF 47**	**YAR 204-012-2F**	0,30
PF 3/4 TR	**PF 47**	**YAR 204-012-2RF**	0,30
PFD 3/4 TF	**PFD 47**	**YAR 204-012-2F**	0,24
PFD 3/4 TR	**PFD 47**	**YAR 204-012-2RF**	0,24
PFT 3/4 TF	**PFT 47**	**YAR 204-012-2F**	0,24
PFT 3/4 TR	**PFT 47**	**YAR 204-012-2RF**	0,24
PF 20 RM	**PF 47**	**YAT 204**	0,29
PF 20 TF	**PF 47**	**YAR 204-2F**	0,32
PF 20 TR	**PF 47**	**YAR 204-2RF**	0,32
PFD 20 RM	**PFD 47**	**YAT 204**	0,23
PFD 20 TF	**PFD 47**	**YAR 204-2F**	0,26
PFD 20 TR	**PFD 47**	**YAR 204-2RF**	0,26
PFT 20 RM	**PFT 47**	**YAT 204**	0,20
PFT 20 TF	**PFT 47**	**YAR 204-2F**	0,23
PFT 20 TR	**PFT 47**	**YAR 204-2RF**	0,23
PF 25 RM	**PF 52**	**YAT 205**	0,33
PF 25 TF	**PF 52**	**YAR 205-2F**	0,36
PF 25 TR	**PF 52**	**YAR 205-2RF**	0,36
PFD 25 RM	**PFD 52**	**YAT 205**	0,30
PFD 25 TF	**PFD 52**	**YAR 205-2F**	0,33
PFD 25 TR	**PFD 52**	**YAR 205-2RF**	0,33
PFT 25 RM	**PFT 52**	**YAT 205**	0,25
PFT 25 TF	**PFT 52**	**YAR 205-2F**	0,28
PFT 25 TR	**PFT 52**	**YAR 205-2RF**	0,28

rgab.ru Берг АБ bergab@ya.ru Тел. (495)-228-06-21, факс (495) 22

rgab.ru Берг АБ bergab@ya.ru Тел. (495)-228-06-21, факс (495) 22

Y-bearing flanged units with pressed steel housing and grub screws

d **30 – 35** mm
1 – 1 1/4 in

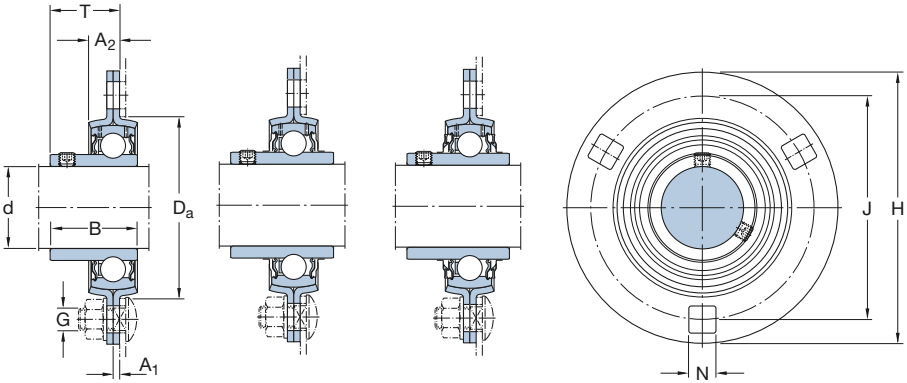

YAT YAR-2F YAR-2RF PF

Dimensions											Basic load ratings		Fatigue load limit	Permissible housing load	Designation
											dynamic	static		radial	No order designation
d	A_1	A_2	B	D_a	H	H_1/L	J	N	G	T	C	C_0	P_u		
mm/in											kN		kN	kN	–
1	2	9	34,1	60	95	–	76	8,7	8	21,8	14	7,8	0,335	3,6	PF 1. TF
	2	9	34,1	60	95	–	76	8,7	8	21,8	14	7,8	0,335	3,6	PF 1. TR
	2	9	34,1	60	95	34	76	8,7	8	21,8	14	7,8	0,335	3,6	PFD 1. TF
	2	9	34,1	60	95	34	76	8,7	8	21,8	14	7,8	0,335	3,6	PFD 1. TR
	2	9	34,1	60	95	71	76	8,7	8	21,8	14	7,8	0,335	3,6	PFT 1. TF
	2	9	34,1	60	95	71	76	8,7	8	21,8	14	7,8	0,335	3,6	PFT 1. TR
30	2,5	9,5	30,2	71	112	–	90,5	10,5	10	23,5	19,5	11,2	0,475	5	PF 30 RM
	2,5	9,5	38,1	71	112	–	90,5	10,5	10	24,7	19,5	11,2	0,475	5	PF 30 TF
	2,5	9,5	38,1	71	112	–	90,5	10,5	10	24,7	19,5	11,2	0,475	5	PF 30 TR
	2,5	9,5	30,2	71	112	38	90,5	10,5	10	23,5	19,5	11,2	0,475	5	PFD 30 RM
	2,5	9,5	38,1	71	112	38	90,5	10,5	10	24,7	19,5	11,2	0,475	5	PFD 30 TF
	2,5	9,5	38,1	71	112	38	90,5	10,5	10	24,7	19,5	11,2	0,475	5	PFD 30 TR
	2,5	9,5	30,2	71	112	84	90,5	10,5	10	23,5	19,5	11,2	0,475	5	PFT 30 RM
	2,5	9,5	38,1	71	112	84	90,5	10,5	10	24,7	19,5	11,2	0,475	5	PFT 30 TF
	2,5	9,5	38,1	71	112	84	90,5	10,5	10	24,7	19,5	11,2	0,475	5	PFT 30 TR
1 1/4	2,5	10	42,9	81	122	–	100	11	10	27,9	25,5	15,3	0,655	6,5	PF 1.1/4 TF
	2,5	10	42,9	81	122	–	100	11	10	27,9	25,5	15,3	0,655	6,5	PF 1.1/4 TR
	2,5	10	42,9	81	122	45	100	11	10	27,9	25,5	15,3	0,655	6,5	PFD 1.1/4 TF
	2,5	10	42,9	81	122	45	100	11	10	27,9	25,5	15,3	0,655	6,5	PFD 1.1/4 TR
	2,5	10	42,9	81	122	94	100	11	10	27,9	25,5	15,3	0,655	6,5	PFT 1.1/4 TF
	2,5	10	42,9	81	122	94	100	11	10	27,9	25,5	15,3	0,655	6,5	PFT 1.1/4 TR
35	2,5	10	33	81	122	–	100	11	10	25,8	25,5	15,3	0,655	6,5	PF 35 RM
	2,5	10	42,9	81	122	–	100	11	10	27,9	25,5	15,3	0,655	6,5	PF 35 TF
	2,5	10	42,9	81	122	–	100	11	10	27,9	25,5	15,3	0,655	6,5	PF 35 TR
	2,5	10	33	81	122	45	100	11	10	25,8	25,5	15,3	0,655	6,5	PFD 35 RM
	2,5	10	42,9	81	122	45	100	11	10	27,9	25,5	15,3	0,655	6,5	PFD 35 TF
	2,5	10	42,9	81	122	45	100	11	10	27,9	25,5	15,3	0,655	6,5	PFD 35 TR
	2,5	10	33	81	122	94	100	11	10	25,8	25,5	15,3	0,655	6,5	PFT 35 RM
	2,5	10	42,9	81	122	94	100	11	10	27,9	25,5	15,3	0,655	6,5	PFT 35 TF
	2,5	10	42,9	81	122	94	100	11	10	27,9	25,5	15,3	0,655	6,5	PFT 35 TR

rgab.ru Берг АБ bergab@ya.ru Тел. (495)-228-06-21, факс (495) 22

rgab.ru Берг АБ bergab@ya.ru Тел. (495)-228-06-21, факс (495) 22

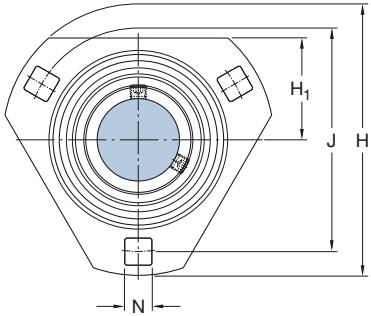

PFD

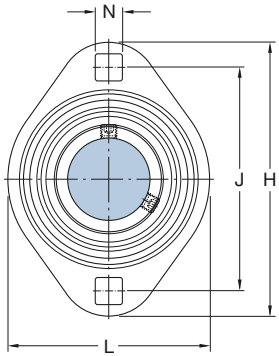

PFT

Bearing unit No order designation	**Order designations** **Housing**	**Bearing**	**Mass** Bearing unit
–	–		kg
PF 1. TF	**PF 52**	**YAR 205-100-2F**	0,35
PF 1. TR	**PF 52**	**YAR 205-100-2RF**	0,35
PFD 1. TF	**PFD 52**	**YAR 205-100-2F**	0,33
PFD 1. TR	**PFD 52**	**YAR 205-100-2RF**	0,33
PFT 1. TF	**PFT 52**	**YAR 205-100-2F**	0,28
PFT 1. TR	**PFT 52**	**YAR 205-100-2RF**	0,28
PF 30 RM	**PF 62**	**YAT 206**	0,53
PF 30 TF	**PF 62**	**YAR 206-2F**	0,58
PF 30 TR	**PF 62**	**YAR 206-2RF**	0,58
PFD 30 RM	**PFD 62**	**YAT 206**	0,42
PFD 30 TF	**PFD 62**	**YAR 206-2F**	0,47
PFD 30 TR	**PFD 62**	**YAR 206-2RF**	0,47
PFT 30 RM	**PFT 62**	**YAT 206**	0,41
PFT 30 TF	**PFT 62**	**YAR 206-2F**	0,46
PFT 30 TR	**PFT 62**	**YAR 206-2RF**	0,46
PF 1.1/4 TF	**PF 72**	**YAR 207-104-2F**	0,83
PF 1.1/4 TR	**PF 72**	**YAR 207-104-2RF**	0,83
PFD 1.1/4 TF	**PFD 72**	**YAR 207-104-2F**	0,69
PFD 1.1/4 TR	**PFD 72**	**YAR 207-104-2RF**	0,69
PFT 1.1/4 TF	**PFT 72**	**YAR 207-104-2F**	0,69
PFT 1.1/4 TR	**PFT 72**	**YAR 207-104-2RF**	0,69
PF 35 RM	**PF 72**	**YAT 207**	0,67
PF 35 TF	**PF 72**	**YAR 207-2F**	0,77
PF 35 TR	**PF 72**	**YAR 207-2RF**	0,77
PFD 35 RM	**PFD 72**	**YAT 207**	0,54
PFD 35 TF	**PFD 72**	**YAR 207-2F**	0,64
PFD 35 TR	**PFD 72**	**YAR 207-2RF**	0,64
PFT 35 RM	**PFT 72**	**YAT 207**	0,55
PFT 35 TF	**PFT 72**	**YAR 207-2F**	0,65
PFT 35 TR	**PFT 72**	**YAR 207-2RF**	0,65

rgab.ru Берг АБ bergab@ya.ru Тел. (495)-228-06-21, факс (495) 22

rgab.ru Берг АБ bergab@ya.ru Тел. (495)-228-06-21, факс (495) 22

Y-bearing flanged units with pressed steel housing and grub screws

d **40 – 50** mm
1 1/2 – 1 3/4 in

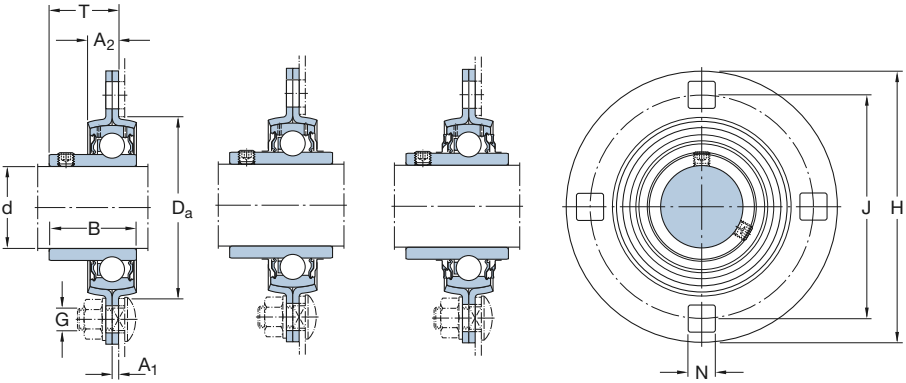

YAT YAR-2F YAR-2RF PF

Dimensions											Basic load ratings		Fatigue load limit	Permissible housing load	Designation
											dynamic	static		radial	No order designation
d	A_1	A_2	B	D_a	H	H_1/L	J	N	G	T	C	C_0	P_u		
mm/in											kN		kN	kN	–
1 1/2	3,5	10	49,2	91	148	–	119	13,5	12	33,7	30,7	19	0,8	7,5	PF 1.1/2 TF
	3,5	10	49,2	91	148	–	119	13,5	12	33,7	30,7	19	0,8	7,5	PF 1.1/2 TR
	3,5	10	49,2	91	148	53	119	13,5	12	33,7	30,7	19	0,8	7,5	PFD 1.1/2 TF
	3,5	10	49,2	91	148	53	119	13,5	12	33,7	30,7	19	0,8	7,5	PFD 1.1/2 TR
	3,5	10	49,2	91	148	104	119	13,5	12	33,7	30,7	19	0,8	7,5	PFT 1.1/2 TF
	3,5	10	49,2	91	148	104	119	13,5	12	33,7	30,7	19	0,8	7,5	PFT 1.1/2 TR
40	3,5	10	36	91	148	–	119	13,5	12	28,8	30,7	19	0,8	7,5	PF 40 RM
	3,5	10	49,2	91	148	–	119	13,5	12	33,7	30,7	19	0,8	7,5	PF 40 TF
	3,5	10	49,2	91	148	–	119	13,5	12	33,7	30,7	19	0,8	7,5	PF 40 TR
	3,5	10	36	91	148	53	119	13,5	12	28,8	30,7	19	0,8	7,5	PFD 40 RM
	3,5	10	49,2	91	148	53	119	13,5	12	33,7	30,7	19	0,8	7,5	PFD 40 TF
	3,5	10	49,2	91	148	53	119	13,5	12	33,7	30,7	19	0,8	7,5	PFD 40 TR
	3,5	10	36	91	148	104	119	13,5	12	28,8	30,7	19	0,8	7,5	PFT 40 RM
	3,5	10	49,2	91	148	104	119	13,5	12	33,7	30,7	19	0,8	7,5	PFT 40 TF
	3,5	10	49,2	91	148	104	119	13,5	12	33,7	30,7	19	0,8	7,5	PFT 40 TR
1 3/4	3,5	10,5	49,2	97	149	–	120,6	13,5	12	33,7	33,2	21,6	0,915	8,3	PF 1.3/4 TF
	3,5	10,5	49,2	97	149	–	120,6	13,5	12	33,7	33,2	21,6	0,915	8,3	PF 1.3/4 TR
45	3,5	10,5	37	97	149	–	120,6	13,5	12	29,3	33,2	21,6	0,915	8,3	PF 45 RM
	3,5	10,5	49,2	97	149	–	120,6	13,5	12	33,7	33,2	21,6	0,915	8,3	PF 45 TF
	3,5	10,5	49,2	97	149	–	120,6	13,5	12	33,7	33,2	21,6	0,915	8,3	PF 45 TR
50	4	11	38,9	102	155	–	127	13,5	12	31,6	35,1	23,2	0,98	9	PF 50 RM
	4	11	51,6	102	155	–	127	13,5	12	36,6	35,1	23,2	0,98	9	PF 50 TF
	4	11	51,6	102	155	–	127	13,5	12	36,6	35,1	23,2	0,98	9	PF 50 TR

rgab.ru Берг АБ bergab@ya.ru Тел. (495)-228-06-21, факс (495) 22

rgab.ru Берг АБ bergab@ya.ru Тел. (495)-228-06-21, факс (495) 22

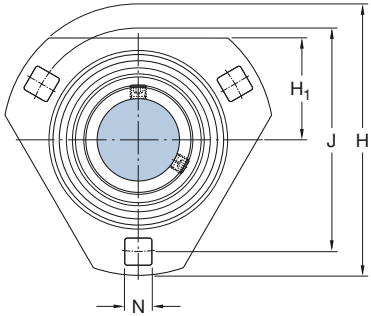

PFD

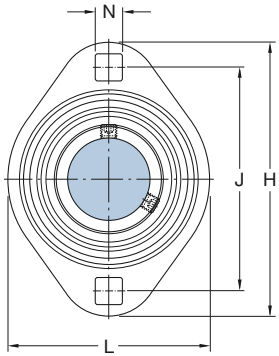

PFT

Designation No order designation	**Order designations** **Housing**	**Bearing**	**Mass** Bearing unit
–	–		kg
PF 1.1/2 TF	**PF 80**	**YAR 208-108-2F**	1,35
PF 1.1/2 TR	**PF 80**	**YAR 208-108-2RF**	1,33
PFD 1.1/2 TF	**PFD 80**	**YAR 208-108-2F**	1,06
PFD 1.1/2 TR	**PFD 80**	**YAR 208-108-2RF**	1,06
PFT 1.1/2 TF	**PFT 80**	**YAR 208-108-2F**	0,95
PFT 1.1/2 TR	**PFT 80**	**YAR 208-108-2RF**	0,95
PF 40 RM	**PF 80**	**YAT 208**	1,18
PF 40 TF	**PF 80**	**YAR 208-2F**	1,30
PF 40 TR	**PF 80**	**YAR 208-2RF**	1,30
PFD 40 RM	**PFD 80**	**YAT 208**	0,90
PFD 40 TF	**PFD 80**	**YAR 208-2F**	1,02
PFD 40 TR	**PFD 80**	**YAR 208-2RF**	1,02
PFT 40 RM	**PFT 80**	**YAT 208**	0,78
PFT 40 TF	**PFT 80**	**YAR 208-2F**	0,90
PFT 40 TR	**PFT 80**	**YAR 208-2RF**	0,90
PF 1.3/4 TF	**PF 85**	**YAR 209-112-2F**	1,37
PF 1.3/4 TR	**PF 85**	**YAR 209-112-2RF**	1,37
PF 45 RM	**PF 85**	**YAT 209**	1,23
PF 45 TF	**PF 85**	**YAR 209-2F**	1,35
PF 45 TR	**PF 85**	**YAR 209-2RF**	1,35
PF 50 RM	**PF 90**	**YAT 210**	1,40
PF 50 TF	**PF 90**	**YAR 210-2F**	1,55
PF 50 TR	**PF 90**	**YAR 210-2RF**	1,55

rgab.ru Берг АБ bergab@ya.ru Тел. (495)-228-06-21, факс (495) 22

rgab.ru Берг АБ bergab@ya.ru Тел. (495)-228-06-21, факс (495) 22

Y-bearing flanged units with pressed steel housing and an eccentric locking collar

d **15 – 30** mm
3/4 – 1 in

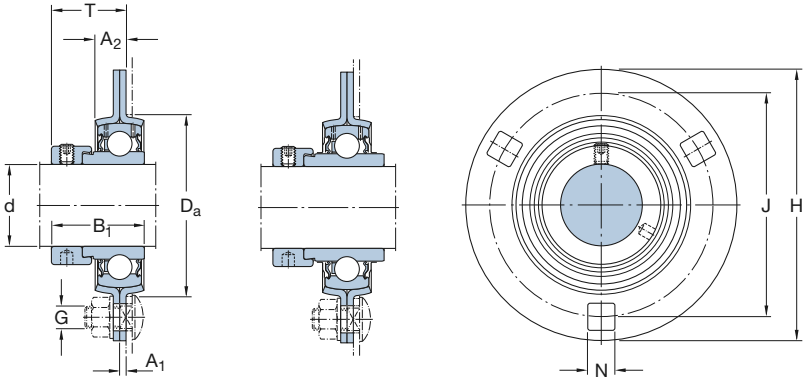

YET YEL-2F PF

Dimensions										Basic load ratings		Fatigue load limit	Permissible housing load	Designation
										dynamic	static		radial	No order designation
d	A_1	A_2	B_1	D_a	H	H_1/L	J	N	G	T	C	C_0	P_u	
mm/in											kN		kN	kN	–
15	2	7	28,6	49	81	–	63	7,1	6	24,1	9,56	4,75	0,2	2,5	PF 15 FM
	2	7	28,6	49	81	29	63	7,1	6	24,1	9,56	4,75	0,2	2,5	PFD 15 FM
	2	7	28,6	49	81	59	63	7,1	6	24,1	9,56	4,75	0,2	2,5	PFT 15 FM
17	2	7	28,6	49	81	–	63	7,1	6	24,1	9,56	4,75	0,2	2,5	PF 17 FM
	2	7	28,6	49	81	29	63	7,1	6	24,1	9,56	4,75	0,2	2,5	PFD 17 FM
	2	7	28,6	49	81	59	63	7,1	6	24,1	9,56	4,75	0,2	2,5	PFT 17 FM
3/4	2	8	31	55	91	–	71,5	8,7	8	25,5	12,7	6,55	0,28	3,3	PF 3/4 FM
	2	8	31	55	91	32	71,5	8,7	8	25,5	12,7	6,55	0,28	3,3	PFD 3/4 FM
	2	8	31	55	91	67	71,5	8,7	8	25,5	12,7	6,55	0,28	3,3	PFT 3/4 FM
20	2	8	31	55	91	–	71,5	8,7	8	25,5	12,7	6,55	0,28	3,3	PF 20 FM
	2	8	43,7	55	91	–	71,5	8,7	8	28,6	12,7	6,55	0,28	3,3	PF 20 WF
	2	8	31	55	91	32	71,5	8,7	8	25,5	12,7	6,55	0,28	3,3	PFD 20 FM
	2	8	43,7	55	91	32	71,5	8,7	8	28,6	12,7	6,55	0,28	3,3	PFD 20 WF
	2	8	31	55	91	67	71,5	8,7	8	25,5	12,7	6,55	0,28	3,3	PFT 20 FM
	2	8	43,4	55	91	67	71,5	8,7	8	28,6	12,7	6,55	0,28	3,3	PFT 20 WF
25	2	9	31	60	95	–	76	8,7	8	25,5	14	7,8	0,335	3,6	PF 25 FM
	2	9	44,4	60	95	–	76	8,7	8	28,9	14	7,8	0,335	3,6	PF 25 WF
	2	9	31	60	95	34	76	8,7	8	25,5	14	7,8	0,335	3,6	PFD 25 FM
	2	9	44,4	60	95	34	76	8,7	8	28,9	14	7,8	0,335	3,6	PFD 25 WF
	2	9	31	60	95	71	76	8,7	8	25,5	14	7,8	0,335	3,6	PFT 25 FM
	2	9	44,4	60	95	71	76	8,7	8	28,9	14	7,8	0,335	3,6	PFT 25 WF
1	2	9	31	60	95	–	76	8,7	8	25,5	14	7,8	0,335	3,6	PF 1. FM
	2	9	31	60	95	34	76	8,7	8	25,5	14	7,8	0,335	3,6	PFD 1. FM
	2	9	31	60	95	71	76	8,7	8	25,5	14	7,8	0,335	3,6	PFT 1. FM
30	2,5	9,5	35,7	71	112	–	90,5	10,5	10	29,2	19,5	11,2	0,475	5	PF 30 FM
	2,5	9,5	48,4	71	112	–	90,5	10,5	10	32,6	19,5	11,2	0,475	5	PF 30 WF
	2,5	9,5	35,7	71	112	38	90,5	10,5	10	29,2	19,5	11,2	0,475	5	PFD 30 FM
	2,5	9,5	48,4	71	112	38	90,5	10,5	10	32,6	19,5	11,2	0,475	5	PFD 30 WF
	2,5	9,5	35,7	71	112	84	90,5	10,5	10	29,2	19,5	11,2	0,475	5	PFT 30 FM
	2,5	9,5	48,4	71	112	84	90,5	10,5	10	32,6	19,5	11,2	0,475	5	PFT 30 WF

rgab.ru Берг АБ bergab@ya.ru Тел. (495)-228-06-21, факс (495) 22

rgab.ru Берг АБ bergab@ya.ru Тел. (495)-228-06-21, факс (495) 22

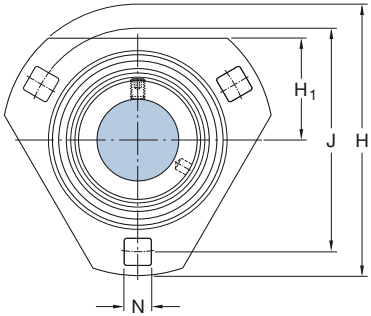

PFD

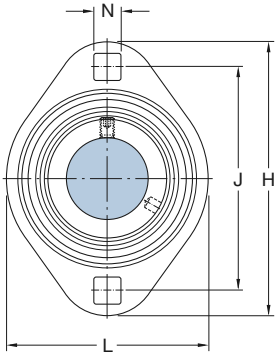

PFT

Designation No order designation	Order designations Housing	 Bearing	Mass Bearing unit
–	–		kg
PF 15 FM	**PF 40**	**YET 203/15**	0,24
PFD 15 FM	**PFD 40**	**YET 203/15**	0,21
PFT 15 FM	**PFT 40**	**YET 203/15**	0,21
PF 17 FM	**PF 40**	**YET 203**	0,22
PFD 17 FM	**PFD 40**	**YET 203**	0,20
PFT 17 FM	**PFT 40**	**YET 203**	0,19
PF 3/4 FM	**PF 47**	**YET 204-012**	0,31
PFD 3/4 FM	**PFD 47**	**YET 204-012**	0,27
PFT 3/4 FM	**PFT 47**	**YET 204-012**	0,26
PF 20 FM	**PF 47**	**YET 204**	0,30
PF 20 WF	**PF 47**	**YEL 204-2F**	0,33
PFD 20 FM	**PFD 47**	**YET 204**	0,26
PFD 20 WF	**PFD 47**	**YEL 204-2F**	0,29
PFT 20 FM	**PFT 47**	**YET 204**	0,25
PFT 20 WF	**PFT 47**	**YEL 204-2F**	0,28
PF 25 FM	**PF 52**	**YET 205**	0,35
PF 25 WF	**PF 52**	**YEL 205-2F**	0,40
PFD 25 FM	**PFD 52**	**YET 205**	0,30
PFD 25 WF	**PFD 52**	**YEL 205-2F**	0,35
PFT 25 FM	**PFT 52**	**YET 205**	0,29
PFT 25 WF	**PFT 52**	**YEL 205-2F**	0,34
PF 1. FM	**PF 52**	**YET 205-100**	0,35
PFD 1. FM	**PFD 52**	**YET 205-100**	0,35
PFT 1. FM	**PFT 52**	**YET 205-100**	0,29
PF 30 FM	**PF 62**	**YET 206**	0,56
PF 30 WF	**PF 62**	**YEL 206-2F**	0,62
PFD 30 FM	**PFD 62**	**YET 206**	0,48
PFD 30 WF	**PFD 62**	**YEL 206-2F**	0,54
PFT 30 FM	**PFT 62**	**YET 206**	0,46
PFT 30 WF	**PFT 62**	**YEL 206-2F**	0,52

rgab.ru Берг АБ bergab@ya.ru Тел. (495)-228-06-21, факс (495) 22

rgab.ru Берг АБ bergab@ya.ru Тел. (495)-228-06-21, факс (495) 22

Y-bearing flanged units with pressed steel housing and an eccentric locking collar

d **35 – 50** mm
1 1/2 in

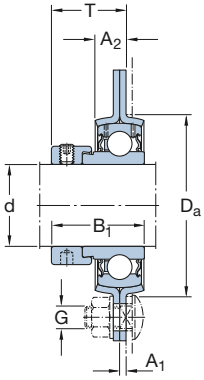

YET

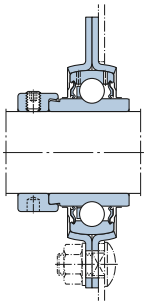

YEL-2F

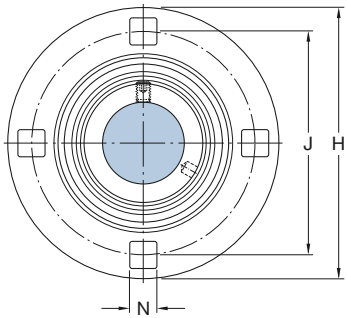

PF (units with d = 35 mm have 3 bolt holes)

Dimensions											Basic load ratings dynamic	static	Fatigue load limit	Permissible housing load radial	Designation No order designation
d	A_1	A_2	B_1	D_a	H	H_1/L	J	N	G	T	C	C_0	P_u		
mm/in											kN		kN	kN	–
35	2,5	10	38,9	81	122	–	100	11	10	31,9	25,5	15,3	0,655	6,5	PF 35 FM
	2,5	10	51,1	81	122	–	100	11	10	34,8	25,5	15,3	0,655	6,5	PF 35 WF
	2,5	10	38,9	81	122	45	100	11	10	31,9	25,5	15,3	0,655	6,5	PFD 35 FM
	2,5	10	51,1	81	122	45	100	11	10	34,8	25,5	15,3	0,655	6,5	PFD 35 WF
	2,5	10	38,9	81	122	94	100	11	10	31,9	25,5	15,3	0,655	6,5	PFT 35 FM
	2,5	10	51,1	81	122	94	100	11	10	34,8	25,5	15,3	0,655	6,5	PFT 35 WF
1 1/2	3,5	10	43,7	91	148	–	119	13,5	12	36,2	30,7	19	0,8	7,5	PF 1.1/2 FM
	3,5	10	43,7	91	148	53	119	13,5	12	36,2	30,7	19	0,8	7,5	PFD 1.1/2 FM
	3,5	10	43,7	91	148	104	119	13,5	12	36,2	30,7	19	0,8	7,5	PFT 1.1/2 FM
40	3,5	10	43,7	91	148	–	119	13,5	12	36,2	30,7	19	0,8	7,5	PF 40 FM
	3,5	10	56,3	91	148	–	119	13,5	12	38,4	30,7	19	0,8	7,5	PF 40 WF
	3,5	10	43,7	91	148	53	119	13,5	12	36,2	30,7	19	0,8	7,5	PFD 40 FM
	3,5	10	56,3	91	148	53	119	13,5	12	38,4	30,7	19	0,8	7,5	PFD 40 WF
	3,5	10	43,7	91	148	104	119	13,5	12	36,2	30,7	19	0,8	7,5	PFT 40 FM
	3,5	10	56,3	91	148	104	119	13,5	12	38,4	30,7	19	0,8	7,5	PFT 40 WF
45	3,5	10,5	43,7	97	149	–	120,6	13,5	12	36,2	33,2	21,6	0,915	8,3	PF 45 FM
	3,5	10,5	56,3	97	149	–	120,6	13,5	12	38,4	33,2	21,6	0,915	8,3	PF 45 WF
50	4	11	43,7	102	155	–	127	13,5	12	36,7	35,1	23,2	0,98	9	PF 50 FM
	4	11	62,7	102	155	–	127	13,5	12	42,1	35,1	23,2	0,98	9	PF 50 WF

rgab.ru Берг АБ bergab@ya.ru Тел. (495)-228-06-21, факс (495) 22

rgab.ru Берг АБ bergab@ya.ru Тел. (495)-228-06-21, факс (495) 22

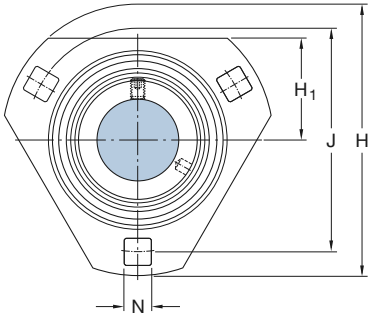

PFD

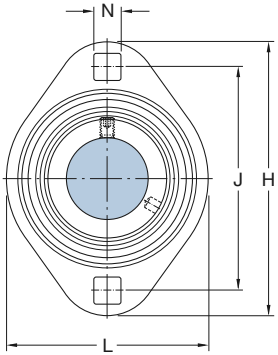

PFT

Designation No order designation	**Order designations** **Housing**	**Bearing**	**Mass** Bearing unit
–	–		kg
PF 35 FM	**PF 72**	**YET 207**	0,70
PF 35 WF	**PF 72**	**YEL 207-2F**	0,78
PFD 35 FM	**PFD 72**	**YET 207**	0,66
PFD 35 WF	**PFD 72**	**YEL 207-2F**	0,74
PFT 35 FM	**PFT 72**	**YET 207**	0,72
PFT 35 WF	**PFT 72**	**YEL 207-2F**	0,80
PF 1.1/2 FM	**PF 80**	**YET 208-108**	1,23
PFD 1.1/2 FM	**PFD 80**	**YET 208-108**	1,06
PFT 1.1/2 FM	**PFT 80**	**YET 208-108**	0,98
PF 40 FM	**PF 80**	**YET 208**	1,20
PF 40 WF	**PF 80**	**YEL 208-2F**	1,28
PFD 40 FM	**PFD 80**	**YET 208**	1,06
PFD 40 WF	**PFD 80**	**YEL 208-2F**	1,15
PFT 40 FM	**PFT 80**	**YET 208**	0,94
PFT 40 WF	**PFT 80**	**YEL 208-2F**	1,02
PF 45 FM	**PF 85**	**YET 209**	1,30
PF 45 WF	**PF 85**	**YEL 209-2F**	1,40
PF 50 FM	**PF 90**	**YET 210**	1,50
PF 50 WF	**PF 90**	**YEL 210-2F**	1,65

rgab.ru Берг АБ bergab@ya.ru Тел. (495)-228-06-21, факс (495) 22

rgab.ru Берг АБ bergab@ya.ru Тел. (495)-228-06-21, факс (495) 2

rgab.ru Берг АБ bergab@ya.ru Тел. (495)-228-06-21, факс (495) 2

rgab.ru Берг АБ bergab@ya.ru Тел. (495)-228-06-21, факс (495) 22

Y-bearing take-up units

Designs **162**

Data – general **162**
Dimensions 162
Tolerances 162
Radial internal clearance 163
Materials 163
Load carrying ability of the housings 163
End covers 163
Grease fills 163
Mounting 163

Product tables **164**
Y-bearing take-up units
with grub screws 164
with an eccentric locking collar 166

6

rgab.ru Берг АБ bergab@ya.ru Тел. (495)-228-06-21, факс (495) 22

rgab.ru Берг АБ bergab@ya.ru Тел. (495)-228-06-21, факс (495) 22

Designs

Y-bearing take-up units consist of a cast iron housing and an insert bearing (➔ **fig 1**) A grease nipple is provided in the housing for relubrication. Standard Y-bearing take-up units can be located onto the shaft via the inner ring of the insert bearing with either

- grub screws or
- eccentric locking collar.

The bearing is sealed with either

- the standard "Superagriseal" or
- the standard "Superagriseal" fitted with an additional flinger outside the seal.

For detailed information on Y-bearings, please refer to the section "Y-bearings", starting on **page 53**.

Fig 1

Fig 2

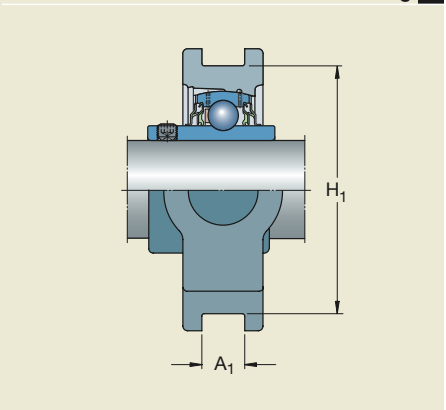

Data – general

Dimensions
The boundary dimensions of SKF Y-bearing take-up housings in the

- TU series conform to ISO 3228:1993,
- TUJ series conform to the Standard JIS B 1559-1995.

Tolerances
The tolerances (➔ **fig 2**) for

- the distance between the guide surfaces, dimension H_1, are ± 0,25 mm,
- the width of the guide surfaces, dimension A_1, are within H13

which correspond to ISO 3228:1993.
Information regarding the tolerances of the inner ring bore diameter can be found in the section "Y-bearings" on **pages 62** and **63**.

rgab.ru Берг АБ bergab@ya.ru Тел. (495)-228-06-21, факс (495) 22

rgab.ru Берг АБ bergab@ya.ru Тел. (495)-228-06-21, факс (495) 22

Radial internal clearance
A Y-bearing take-up unit has the same radial internal clearance as a similarly sized individual Y-bearing, which it incorporates. The values for radial internal clearance can be found in the section “Y-bearings” on **page 63**.

Materials
The housings for Y-bearing take-up units are manufactured from grey cast iron EN-GJL HB195 in accordance with EN 1561:1997.

Load carrying ability of the housings
Cast iron housings can withstand the same dynamic and static loads as their insert bearings. Therefore Y-bearing take-up units may also be used where shock loads or variable axial loads occur, provided the design of the adjustment screw or the way it is secured onto the take-up unit is sufficiently strong.

Because of their special properties, SKF Y-bearing units are used in applications in virtually every industry. If however, they are to be used in an application where health, safety, or the environment is at risk, SKF recommends contacting the SKF application engineering service during the design phase.

End covers
To protect the shaft ends and avoid accidents, end covers are available for Y-bearing take-up units in the TU series (➔ **fig 3**).

In the product tables, end covers in the ECY 2 series are shown together with the appropriate bearing unit. The designation of the end cover is shown together with the distance that the end cover protrudes from the housing.

Additional information on the end covers can be found in the section “Design of bearing arrangements” on **pages 40** and **41**.

Grease fills
All standard SKF Y-bearing take-up units are filled with a high-quality long lasting lithium-calcium soap grease with Class 2 consistency on the NLGI scale.

Fig 3

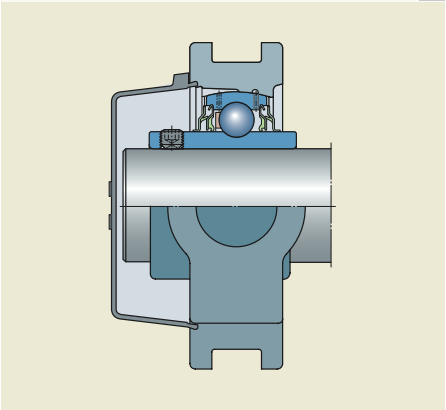

For additional information about lubricants and lubrication, please refer to the section “Lubrication and maintenance”, starting on **page 42**.

Mounting
The mounting procedures for a Y-bearing take-up unit depend on the means by which the unit is attached to the shaft. The procedures are described in detail in the section “Mounting instructions”, starting on **page 169**.

6

rgab.ru Берг АБ bergab@ya.ru Тел. (495)-228-06-21, факс (495) 22

rgab.ru Берг АБ bergab@ya.ru Тел. (495)-228-06-21, факс (495) 22

Y-bearing take-up units with grub screws
d **20 – 60** mm
1 – 2 in

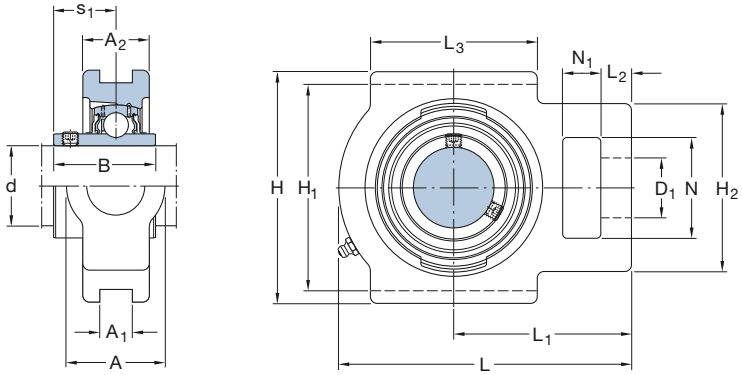

Dimensions																Designation Bearing unit
d	A	A_1	A_2	B	D_1	H	H_1	H_2	L	L_1	L_2	L_3	N	N_1	s_1	
mm/in																–
20	34	13,5	25	31	19	92	76	54	97	62	10	54	32	16	18,3	**TU 20 TF**
	34	12	25	31	19	92	76	54	97	62	10	54	32	16	18,3	**TUJ 20 TF**
25	34	13,5	25	34,1	19	91	76	53	100	64	10	52	33	16	19,8	**TU 25 TF**
	34	12	25	34,1	19	91	76	53	100	64	10	52	33	16	19,8	**TUJ 25 TF**
1	34	13,5	25	34,1	19	91	76	53	100	64	10	52	33	16	19,8	**TU 1. TF**
30	37	13,5	28	38,1	22	104	89	56	114	70	10	57	37	16	22,2	**TU 30 TF**
	37	12	28	38,1	22	104	89	56	114	70	10	57	37	16	22,2	**TUJ 30 TF**
1 1/4	37	13,5	30	42,9	22	103	89	64	129	78	12	64	38	17	25,4	**TU 1.1/4 TF**
35	37	13,5	30	42,9	22	103	89	64	129	78	12	64	38	17	25,4	**TU 35 TF**
	37	12	30	42,9	22	103	89	64	129	78	12	64	38	17	25,4	**TUJ 35 TF**
1 1/2	49	17,5	33	49,2	29	115	101	83	145	88	15	83	50	19	30,2	**TU 1.1/2 TF**
40	49	17,5	33	49,2	29	115	101	83	145	88	15	83	50	19	30,2	**TU 40 TF**
	49	16	33	49,2	29	115	102	83	145	88	15	83	50	19	30,2	**TUJ 40 TF**
45	49	17,5	35	49,2	29	117	101	83	144	87	15	83	49	19	30,2	**TU 45 TF**
	49	16	35	49,2	29	117	102	83	144	87	15	83	49	19	30,2	**TUJ 45 TF**
50	49	17,5	36	51,6	29	117	101	83	149	90	16	86	49	19	32,6	**TU 50 TF**
	49	16	36	51,6	29	117	102	83	149	90	16	86	49	19	32,6	**TUJ 50 TF**
2	64	27	41	55,6	35	146	130	102	171	106	19	95	64	25	33,4	**TU 2. TF**
55	64	27	41	55,6	35	146	130	102	171	106	19	95	64	25	33,4	**TU 55 TF**
	64	22	41	55,6	35	146	130	102	171	106	19	95	64	25	33,4	**TUJ 55 TF**
60	60	22	44	65,1	35	146	130	102	186	118	19	100	63,5	32	39,7	**TUJ 60 TF**

rgab.ru Берг АБ bergab@ya.ru Тел. (495)-228-06-21, факс (495) 22

rgab.ru Берг АБ bergab@ya.ru Тел. (495)-228-06-21, факс (495) 22

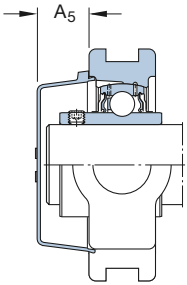

Designations Bearing unit	Separate components Bearing	Housing	**Basic load ratings** dynamic C	static C_0	**Fatigue load limit** P_u	**Limiting speed** with shaft tolerance h6	**Mass** Bearing unit	**Appropriate end cover** Designation	Dimension A_5
–			kN		kN	r/min	kg	–	mm
TU 20 TF	YAR 204-2F	TU 504 M	12,7	6,55	0,28	8 500	0,73	ECY 204	18,5
TUJ 20 TF	YAR 204-2F	TUJ 504	12,7	6,55	0,28	8 500	0,76	–	–
TU 25 TF	YAR 205-2F	TU 505 M	14	7,8	0,335	7 000	0,77	ECY 205	18
TUJ 25 TF	YAR 205-2F	TUJ 505	14	7,8	0,335	7 000	0,82	–	–
TU 1. TF	YAR 205-100-2F	TU 505 M	14	7,8	0,335	7 000	0,77	ECY 205	18
TU 30 TF	YAR 206-2F	TU 506 M	19,5	11,2	0,475	6 300	1,25	ECY 206	20
TUJ 30 TF	YAR 206-2F	TUJ 506	19,5	11,2	0,475	6 300	1,28	–	–
TU 1.1/4 TF	YAR 207-104-2F	TU 507 M	25,5	15,3	0,655	5 300	1,45	ECY 207	22
TU 35 TF	YAR 207-2F	TU 507 M	25,5	15,3	0,655	5 300	1,45	ECY 207	22
TUJ 35 TF	YAR 207-2F	TUJ 507	25,5	15,3	0,655	5 300	1,50	–	–
TU 1.1/2 TF	YAR 208-108-2F	TU 508 M	30,7	19	0,8	5 300	2,30	ECY 208	23,5
TU 40 TF	YAR 208-2F	TU 508 M	30,7	19	0,8	4 800	2,30	ECY 208	23,5
TUJ 40 TF	YAR 208-2F	TUJ 508	30,7	19	0,8	4 800	2,35	–	–
TU 45 TF	YAR 209-2F	TU 509 M	33,2	21,6	0,915	4 300	2,30	ECY 209	23
TUJ 45 TF	YAR 209-2F	TUJ 509	33,2	21,6	0,915	4 300	2,35	–	–
TU 50 TF	YAR 210-2F	TU 510 M	35,1	23,2	0,98	4 000	2,40	ECY 210	29,5
TUJ 50 TF	YAR 210-2F	TUJ 510	35,1	23,2	0,98	4 000	2,50	–	–
TU 2. TF	YAR 211-200-2F	TU 511 M	43,6	29	1,25	4 000	3,85	ECY 211	34
TU 55 TF	YAR 211-2F	TU 511 M	43,6	29	1,25	3 600	3,85	ECY 211	34
TUJ 55 TF	YAR 211-2F	TUJ 511	43,6	29	1,25	3 600	4,00	–	–
TUJ 60 TF	YAR 212-2F	TUJ 512	52,7	36	1,53	3 400	5,00	–	–

rgab.ru Берг АБ bergab@ya.ru Тел. (495)-228-06-21, факс (495) 22

rgab.ru Берг АБ bergab@ya.ru Тел. (495)-228-06-21, факс (495) 22

Y-bearing take-up units with an eccentric locking collar
d **20 – 55** mm

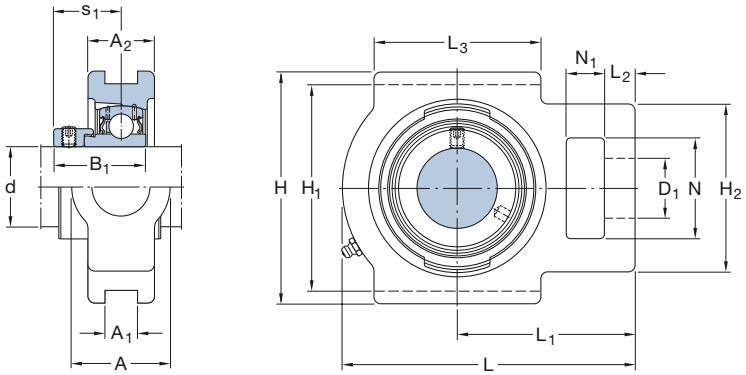

Dimensions																Designation Bearing unit
d	A	A_1	A_2	B_1	D_1	H	H_1	H_2	L	L_1	L_2	L_3	N	N_1	s_1	
mm																–
20	34	13,5	25	31	19	92	76	54	97	62	10	54	32	16	23,5	**TU 20 FM**
25	34	13,5	25	31	19	91	76	53	100	64	10	52	33	16	23,5	**TU 25 FM**
30	37	13,5	28	35,7	22	104	89	56	114	70	10	57	37	16	26,7	**TU 30 FM**
35	37	13,5	30	38,9	22	103	89	64	129	78	12	64	38	17	29,4	**TU 35 FM**
40	49	17,5	33	43,7	29	115	101	83	145	88	15	83	50	19	32,7	**TU 40 FM**
45	49	17,5	35	43,7	29	117	101	83	144	87	15	83	49	19	32,7	**TU 45 FM**
50	49	17,5	36	43,7	29	117	101	83	149	90	16	86	49	19	32,7	**TU 50 FM**
55	64	27	41	48,4	35	146	130	102	171	106	19	95	64	25	36,4	**TU 55 FM**

rgab.ru Берг АБ bergab@ya.ru Тел. (495)-228-06-21, факс (495) 22

rgab.ru Берг АБ bergab@ya.ru Тел. (495)-228-06-21, факс (495) 22

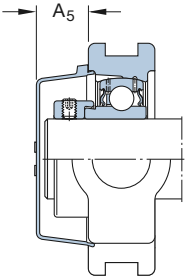

Designations Bearing unit	Separate components Bearing	Housing	**Basic load ratings** dynamic C	static C_0	**Fatigue load limit** P_u	**Limiting speed** with shaft tolerance h6	**Mass** Bearing unit	**Appropriate end cover** Designation	Dimension A_5
–			kN		kN	r/min	kg	–	mm
TU 20 FM	YET 204	TU 504 M	12,7	6,55	0,28	8 500	0,73	ECY 204	18,5
TU 25 FM	YET 205	TU 505 M	14	7,8	0,335	7 000	0,77	ECY 205	18
TU 30 FM	YET 206	TU 506 M	19,5	11,2	0,475	6 300	1,25	ECY 206	20
TU 35 FM	YET 207	TU 507 M	25,5	15,3	0,655	5 300	1,45	ECY 207	22
TU 40 FM	YET 208	TU 508 M	30,7	19	0,8	4 800	2,30	ECY 208	23,5
TU 45 FM	YET 209	TU 509 M	33,2	21,6	0,915	4 300	2,30	ECY 209	23
TU 50 FM	YET 210	TU 510 M	35,1	23,2	0,98	4 000	2,40	ECY 210	29,5
TU 55 FM	YET 211	TU 511 M	43,6	29	1,25	3 600	3,85	ECY 211	34

rgab.ru Берг АБ bergab@ya.ru Тел. (495)-228-06-21, факс (495) 22

rgab.ru Берг АБ bergab@ya.ru Тел. (495)-228-06-21, факс (495) 2

rgab.ru Берг АБ bergab@ya.ru Тел. (495)-228-06-21, факс (495) 2

rgab.ru Берг АБ bergab@ya.ru Тел. (495)-228-06-21, факс (495) 22

Mounting instructions

Mounting instructions – general **170**
Tools 170
Attaching Y-bearing units to the support base 171
Assembling units 171

Mounting instructions for Y-bearing plummer block units
with a composite (Y-TECH) or grey cast iron housing and
grub screws 174
an eccentric locking collar 176
an adapter sleeve 178
with a pressed steel housing and
grub screws 180
an eccentric locking collar 182

Mounting instructions for Y-bearing flanged units
with a composite (Y-TECH) or grey cast iron housing and
grub screws 184
an eccentric locking collar 186
an adapter sleeve 188
with a pressed steel housing and
grub screws 190
an eccentric locking collar 192

Mounting instructions for Y-bearing take-up units
with a grey cast iron housing and
grub screws 194
an eccentric locking collar 195

rgab.ru Берг АБ bergab@ya.ru Тел. (495)-228-06-21, факс (495) 22

rgab.ru Берг АБ bergab@ya.ru Тел. (495)-228-06-21, факс (495) 22

Mounting instructions – general

To provide proper bearing performance and prevent premature failure, skill and cleanliness when mounting Y-bearings or Y-bearing units are necessary. As precision components, they should be handled carefully when mounting. It is also important to choose the correct method of mounting and to use the correct tools for the job.

The method used for mounting a Y-bearing unit depends on

- the overall machine design,
- the Y-bearing housing design,
- the method used to attach the unit to the shaft.

Detailed mounting instructions can be found on the following pages.

Y-bearing units or Y-housings and Y-bearings should not be removed from their original packaging until immediately before they are mounted.

Before installing a Y-bearing unit, check that the shaft is clean and free of any burrs and that the shaft seating is within tolerance. Also be sure that the support surfaces are clean and free of burrs and that the flatness is within the IT7 tolerance grade.

Tools

To mount or dismount a Y-bearing unit, the only tools (➔ **fig 1**) required are

- a hexagonal key (hex wrench) to tighten or loosen the grub screws on the inner ring or the eccentric locking collar as necessary (➔ **table 1**, **page 172**), or
- a hook spanner to tighten or loosen adapter sleeve lock nuts (➔ **table 2**, **page 173**),
- a wrench to tighten or loosen the attachment screws or nuts on their bolts or
- a hexagonal key to tighten or loosen the hexagonal socket head cap screws holding the Y-bearing unit to the support surface.

The hook spanners are part of the comprehensive SKF range of maintenance products.

Fig 1

Fig 2

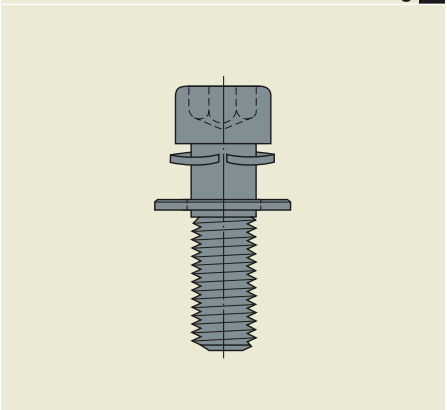

rgab.ru Берг АБ bergab@ya.ru Тел. (495)-228-06-21, факс (495) 22

rgab.ru Берг АБ bergab@ya.ru Тел. (495)-228-06-21, факс (495) 22

Detailed information can be found in the printed catalogue MP3000 “SKF Maintenance and Lubrication Products” or online at www.skf.com.

Attaching Y-bearing units to the support base
To reduce vibrations and enable heat to dissipate from the unit, the housing must be firmly attached to the support base. To do this, SKF recommends using hexagonal socket head cap screws to EN ISO 4762:1988 and using a washer (EN ISO 7089 or 7090) and a spring washer (DIN 128) under the hexagonal head. (➔ **fig** 2).

Assembling units
In cases where the Y-bearing and composite or cast iron Y-housing are not supplied as a unit, the first step is to assemble the bearing into the housing. To do this, start by removing the locking collar if the bearing has one. Then insert the bearing into the filling slot in the housing bore (➔ **fig** 3) and with a round piece of wood or pipe, swivel the bearing into position so that the locking device is facing in the same direction as the filling slots (➔ **fig** 4). When installing the bearing, be sure that the relubrication hole on the side of the locking device and the filling slot in the housing do not coincide (➔ **fig** 5).

Fig 3

Fig 4

Fig 5

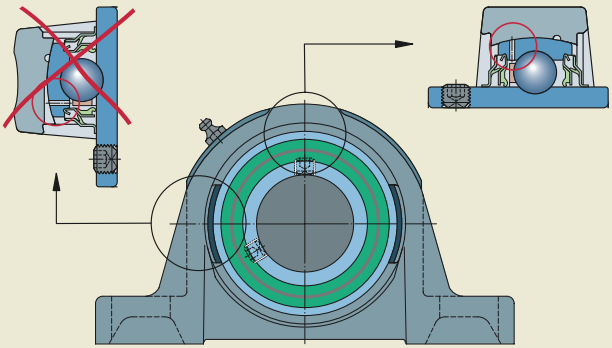

7

rgab.ru Берг АБ bergab@ya.ru Тел. (495)-228-06-21, факс (495) 22

rgab.ru Берг АБ bergab@ya.ru Тел. (495)-228-06-21, факс (495) 22

Table 1

Hexagonal keys to tighten grub screws in inner rings or eccentric locking collars – sizes and tightening torques

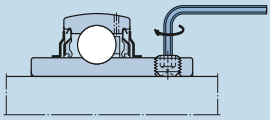

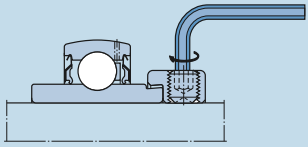

Y-bearing Designation	Shaft diameter d		Hexagonal key size SW		Tightening torque
–	mm	in	mm	in	Nm
Bearings in the YAR series Units with designation suffix TF or TR					
YAR 203/12	12	–	3	–	4
YAR 203/15	15	–	3	–	4
YAR 203	17	–	3	–	4
YAR 204-012	–	3/4	–	1/8	4
YAR 204	20	–	3	–	4
YAR 205	25	–	3	–	4
YAR 205-100	–	1	–	1/8	4
YAR 206	30	–	3	–	4
YAR 206-103	–	1 3/16	–	1/8	4
YAR 207-104	–	1 1/4	–	1/8	4
YAR 207	35	–	3	–	4
YAR 207-107	–	1 7/16	–	5/32	4
YAR 208-108	–	1 1/2	–	5/32	6,5
YAR 208	40	–	4	–	6,5
YAR 209-112	–	1 3/4	–	5/32	6,5
YAR 209	45	–	4	–	6,5
YAR 210	50	–	5	–	16,5
YAR 211-200	–	2	–	3/16	16,5
YAR 211	55	–	5	–	16,5
YAR 212	60	–	5	–	16,5
YAR 213-208	–	2 1/2	–	3/16	16,5
YAR 213	65	–	5	–	16,5
YAR 214	70	–	6	–	28,5
YAR 215	75	–	6	–	28,5
YAR 216	80	–	6	–	28,5
YAR 217	85	–	6	–	28,5
YAR 218	90	–	6	–	28,5
YAR 220	100	–	6	–	28,5

Y-bearing Designation	Shaft diameter d		Hexagonal key size SW		Tightening torque
–	mm	in	mm	in	Nm
Bearings in the YAT series Units with designation suffix RM					
YAT 203	17	–	3	–	4
YAT 204	20	–	3	–	4
YAT 205	25	–	3	–	4
YAT 206	30	–	3	–	4
YAT 207	35	–	3	–	4
YAT 208	40	–	3	–	4
YAT 209	45	–	3	–	4
YAT 210	50	–	4	–	6,5
Bearings in the YET or YEL series Units with designation suffix FM or WF					
YET 203/15	15	–	3	–	4
YET/YEL 203	17	–	3	–	4
YET 204-012	–	3/4	–	1/8	4
YET/YEL 204	20	–	3	–	4
YET/YEL 205	25	–	3	–	4
YET 205-100	–	1	–	1/8	4
YET/YEL 206	30	–	4	–	6,5
YET/YEL 207	35	–	5	–	16,5
YET 208-108	–	1 1/2	–	3/16	16,5
YET/YEL 208	40	–	5	–	16,5
YET/YEL 209	45	–	5	–	16,5
YET/YEL 210	50	–	5	–	16,5
YET/YEL 211	55	–	5	–	16,5
YET/YEL 212	60	–	5	–	16,5

rgab.ru Берг АБ bergab@ya.ru Тел. (495)-228-06-21, факс (495) 22

rgab.ru Берг АБ bergab@ya.ru Тел. (495)-228-06-21, факс (495) 22

Table 2

Hook spanner size and tightening torque for Y-bearings and Y-bearing units on an adapter sleeve

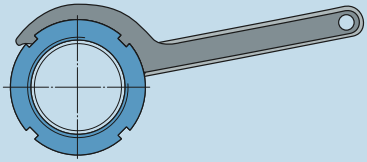

Designation Y-bearing + adapter sleeve	**Shaft diameter** d		**Hook spanner**	**Tightening torque** min	max
–	mm	in	–	Nm	
Bearings in the YSA series Units with designation suffix KF					
YSA 205-2FK + HE 2305	–	3/4	HN 5	13	17
YSA 205-2FK + H 2305	20	–	HN 5	13	17
YSA 206-2FK + HA 2306	–	15/16	HN 6	22	28
YSA 206-2FK + H 2306	25	–	HN 6	22	28
YSA 206-2FK + HE 2306	–	1	HN 6	22	28
YSA 207-2FK + H 2307	30	–	HN 7	27	33
YSA 207-2FK + HA 2307	–	1 3/16	HN 7	27	33
YSA 208-2FK + HE 2308	–	1 1/4	HN 8	35	45
YSA 208-2FK + H 2308	35	–	HN 8	35	45
YSA 209-2FK + HA 2309	–	1 7/16	HN 9	45	55
YSA 209-2FK + HE 2309	–	1 1/2	HN 9	45	55
YSA 209-2FK + H 2309	40	–	HN 9	45	55
YSA 210-2FK + HS 2310	–	1 5/8	HN 10	55	65
YSA 210-2FK + HA 2310	–	1 11/16	HN 10	55	65
YSA 210-2FK + HE 2310	–	1 3/4	HN 10	55	65
YSA 210-2FK + H 2310	45	–	HN 10	55	65
YSA 211-2FK + HA 2311 B	–	1 15/16	HN 11	65	85
YSA 211-2FK + H 2311	50	–	HN 11	65	85
YSA 211-2FK + HE 2311	–	2	HN 11	65	85
YSA 212-2FK + HS 2312	–	2 1/8	HN 12	85	115
YSA 212-2FK + H 2312	55	–	HN 12	85	115
YSA 213-2FK + HA 2313	–	2 3/16	HN 13	110	150
YSA 213-2FK + HE 2313	–	2 1/4	HN 13	110	150
YSA 213-2FK + H 2313	60	–	HN 13	110	150
YSA 213-2FK + HS 2313	–	2 3/8	HN 13	110	150

7

rgab.ru Берг АБ bergab@ya.ru Тел. (495)-228-06-21, факс (495) 22

rgab.ru Берг АБ bergab@ya.ru Тел. (495)-228-06-21, факс (495) 22

Mounting instructions for Y-bearing plummer block units

with a composite (Y-TECH) or grey cast iron housing and grub screws

1 Mount any components that are on the shaft beween the two Y-bearing units.
2 Slide the Y-bearing plummer block unit onto the shaft with its locking device facing outwards.
3 Position the Y-bearing unit on the support surface. Fit the attachment bolts or nuts but do not tighten them.
4 Mount the Y-bearing plummer block unit on the other end of the shaft, following steps 2 and 3.
5 Carefully align both Y-bearing units using the shaft. Fully tighten the attachment bolts or nuts in the housing base (➔ **fig 1**).
6 Align the shaft in the bearing arrangement axially and – if possible – turn it a few times.
7 Tighten the grub screws on the inner rings of both units to the tightening torque indicated in **table 1** on **page 172** (➔ **fig 2**).
8 If applicable, snap the end cover(s) into place.

rgab.ru Берг АБ bergab@ya.ru Тел. (495)-228-06-21, факс (495) 22

rgab.ru Берг АБ bergab@ya.ru Тел. (495)-228-06-21, факс (495) 22

Fig 1

Fig 2

rgab.ru Берг АБ bergab@ya.ru Тел. (495)-228-06-21, факс (495) 22

rgab.ru Берг АБ bergab@ya.ru Тел. (495)-228-06-21, факс (495) 22

Mounting instructions for Y-bearing plummer block units

with a composite (Y-TECH) or grey cast iron housing and an eccentric locking collar

1 Mount any components that are on the shaft beween the two Y-bearing units.
2 With the eccentric locking collar removed, slide the Y-bearing plummer block unit onto the shaft with the locking device facing outwards.
3 Position the Y-bearing unit on the support surface. Fit the attachment bolts or nuts but do not tighten them.
4 Mount the Y-bearing plummer block unit on the other end of the shaft, following steps 2 and 3.
5 Carefully align both Y-bearing units using the shaft. Fully tighten the attachment bolts or nuts in the housing base (➔ **fig 1**).
6 Align the shaft in the bearing arrangement axially and – if possible – turn it a few times.
7 Place the eccentric locking collars on the inner ring extension of both Y-bearing units and snug tighten them in the main direction of rotation (➔ **fig 2**).
8 Tighten the locking collars to their final position using
– a hook spanner with a stud engaging the hole in the circumference of the collar (➔ **fig 3**) or
– a hammer and drift punch (➔ **fig 4**).
9 Tighten the grub screw in the eccentric locking collar of both Y-bearing units (➔ **fig 5**) to the tightening torque indicated in **table 1** on **page 172**.
10 If applicable, snap the end cover(s) into place.

SKF
rgab.ru Берг АБ bergab@ya.ru Тел. (495)-228-06-21, факс (495) 22

rgab.ru Берг АБ bergab@ya.ru Тел. (495)-228-06-21, факс (495) 22

Fig 1

Fig 2

Fig 3

Fig 4

Fig 5

rgab.ru Берг АБ bergab@ya.ru Тел. (495)-228-06-21, факс (495) 22

rgab.ru Берг АБ bergab@ya.ru Тел. (495)-228-06-21, факс (495) 22

Mounting instructions for Y-bearing plummer block units

with a composite (Y-TECH) or grey cast iron housing and an adapter sleeve

1 Mount any components that are on the shaft beween the two Y-bearing units.
2 Determine the position of the adapter sleeve on the shaft (➔ **fig** 1).
3 Remove the nut and the locking washer from the adapter sleeve (➔ **fig** 2).
4 Wipe the preservative from the bore and outside surface of the sleeve and oil them lightly with a thin oil.
5 Expand the adapter sleeve slightly by inserting a screwdriver in the slot of the sleeve and push the adapter sleeve into position on the shaft (➔ **fig** 3).
6 Slide the Y-bearing plummer block unit up onto the adapter sleeve with the large end of the tapered bore leading.
7 Install the locking washer and screw the lock nut onto the adapter sleeve until the Y-bearing unit is firmly in position on the sleeve.
8 Further tighten the lock nut
- with a hook spanner in the HN series to a tightening angle of about 90° (➔ **fig** 4) or
- with a TMHN lock nut spanner to the angle that is marked or
- with a torque wrench to the tightening torque indicated in **table** 2 on **page 173**.

9 Lock the nut in position by bending down a tab on the locking washer in one of the slots provided around the circumference of the nut (➔ **fig** 5).
10 Mount the Y-bearing plummer block unit at the other end of the shaft, following steps 2 through 9.
11 Position the Y-bearing units on their support surfaces. Fit the attachment bolts or nuts but do not tighten them.
12 Carefully align both Y-bearing units using the shaft and fully tighten the attachment bolts or nuts (➔ **fig** 6).

SKF
rgab.ru Берг АБ bergab@ya.ru Тел. (495)-228-06-21, факс (495) 22

rgab.ru Берг АБ bergab@ya.ru Тел. (495)-228-06-21, факс (495) 22

Fig 1

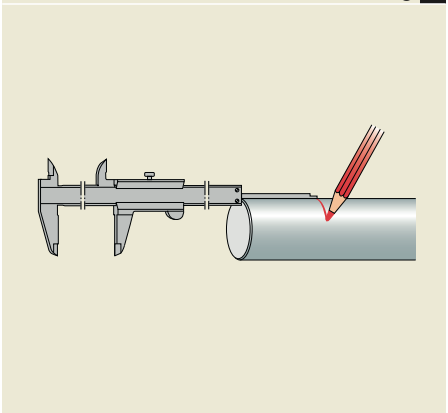

Fig 2

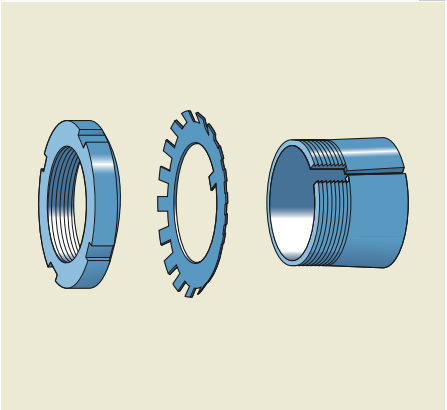

Fig 3

Fig 4

Fig 5

Fig 6

rgab.ru Берг АБ bergab@ya.ru Тел. (495)-228-06-21, факс (495) 22

rgab.ru Берг АБ bergab@ya.ru Тел. (495)-228-06-21, факс (495) 22

Mounting instructions for Y-bearing plummer block units

with a pressed steel housing and grub screws

1 Mount any components that are on the shaft beween the two Y-bearing units.
2 Slide the Y-bearings with the locking device facing outward onto the shaft – at both ends.
  Install the rubber seating ring on the outside diameter of the bearing (optional).
3 Place the base of each housing on its support surface.
4 Place the shaft and Y-bearings into position in each housing base. Then place the housing caps over the bearings (➔ **fig** 1) and install the attachment bolts or nuts.
5 Carefully align both Y-bearing units using the shaft. Then tighten the attachment bolts or nuts (➔ **fig** 2).
6 Align the shaft in the bearing arrangement axially and – if possible – turn it a few times.
7 Tighten the grub screws in the inner ring of both bearings (➔ **fig** 3) to the tightening torque indicated in **table** 1 on **page 172**.

rgab.ru Берг АБ bergab@ya.ru Тел. (495)-228-06-21, факс (495) 22

rgab.ru Берг АБ bergab@ya.ru Тел. (495)-228-06-21, факс (495) 22

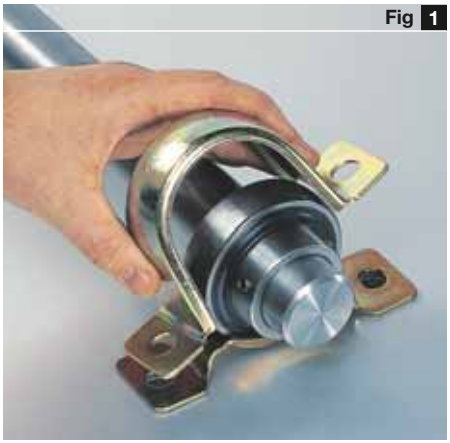
Fig 1

Fig 2

Fig 3

rgab.ru Берг АБ bergab@ya.ru Тел. (495)-228-06-21, факс (495) 22

rgab.ru Берг АБ bergab@ya.ru Тел. (495)-228-06-21, факс (495) 22

Mounting instructions for Y-bearing plummer block units

with a pressed steel housing and an eccentric locking collar

1 Mount any components that are on the shaft beween the two Y-bearing units.

2 With the eccentric locking collar removed, slide the Y-bearings onto both shaft ends with the locking device facing outwards.
Install the rubber seating ring on the outside diameter of the bearing (optional)

3 Place the base of each housing on its support surface.

4 Place the shaft and Y-bearings into position in each housing base. Then place the housing caps over the bearings (➔ **fig** 1) and install the attachment bolts or nuts.

5 Carefully align both Y-bearing units using the shaft. Then tighten the attachment bolts or nuts (➔ **fig** 2).

6 Align the shaft in the bearing arrangement axially and – if possible – turn it a few times.

7 Place the eccentric locking collars on the inner ring extension of both Y-bearings and snug tighten them in the main direction of rotation (➔ **fig** 3).

8 Tighten the locking collars to their final position using
– a hook spanner with a stud engaging the hole in the circumference of the collar (➔ **fig** 4) or
– a hammer and drift punch (➔ **fig** 5).

9 Tighten the grub screw in the eccentric locking collar of both Y-bearings (➔ **fig** 6) to the tightening torque indicated in **table** 1 on **page 172.**

rgab.ru Берг АБ bergab@ya.ru Тел. (495)-228-06-21, факс (495) 22

rgab.ru Берг АБ bergab@ya.ru Тел. (495)-228-06-21, факс (495) 22

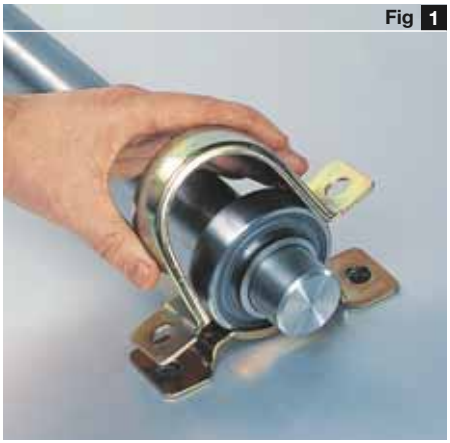
Fig 1

Fig 2

Fig 3

Fig 4

Fig 5

Fig 6

rgab.ru Берг АБ bergab@ya.ru Тел. (495)-228-06-21, факс (495) 22

rgab.ru Берг АБ bergab@ya.ru Тел. (495)-228-06-21, факс (495) 22

Mounting instructions for Y-bearing flanged units

with a composite (Y-TECH) or grey cast housing and grub screws

1 Mount any components that are on the shaft beween the two Y-bearing units.
2 Slide the Y-bearing flanged unit onto the shaft.
3 Fasten the Y-bearing unit securely to the machine wall (➔ **fig** 1).
4 Mount the other flanged Y-bearing unit to the opposite end of the shaft following steps 2 and 3
5 Align the shaft in the bearing arrangement axially and – if possible – turn it a few times.
6 Tighten the grub screws on the inner ring of both units (➔ **fig** 2) to the tightening torque indicated in **table** 1 on **page 172**.
7 If applicable, snap the end cover(s) into place.

rgab.ru Берг АБ bergab@ya.ru Тел. (495)-228-06-21, факс (495) 22

rgab.ru Берг АБ bergab@ya.ru Тел. (495)-228-06-21, факс (495) 22

Fig 1

Fig 2

rgab.ru Берг АБ bergab@ya.ru Тел. (495)-228-06-21, факс (495) 22

rgab.ru Берг АБ bergab@ya.ru Тел. (495)-228-06-21, факс (495) 22

Mounting instructions for Y-bearing flanged units

with a composite (Y-TECH) or grey cast iron housing and an eccentric locking collar

1 Mount any components that are on the shaft beween the two Y-bearing units.
2 With the eccentric locking collar removed, slide the Y-bearing flanged unit onto the shaft with the locking device facing outwards.
3 Fasten the Y-bearing unit securely to the machine wall (➔ **fig** 1).
4 Mount the other Y-bearing flanged unit to the opposite end of the shaft following steps 2 and 3
5 Align the shaft in the bearing arrangement axially and – if possible – turn it a few times.
6 Place the eccentric locking collars on the inner ring of both Y-bearings and snug tighting them in the main direction of rotation (➔ **fig** 2).
7 Tighten the locking collars to their final position using
   – a hook spanner with a stud engaging the hole in the circumference of the collar (➔ **fig** 3) or
   – a hammer and drift punch (➔ **fig** 4).
8 Tighten the grub screw in the eccentric locking collar of both units (➔ **fig** 5) to the tightening torque indicated in **table** 1 on **page 172**.
9 If applicable, snap the end cover(s) into place.

rgab.ru Берг АБ bergab@ya.ru Тел. (495)-228-06-21, факс (495) 22

rgab.ru Берг АБ bergab@ya.ru Тел. (495)-228-06-21, факс (495) 22

Fig 1

Fig 2

Fig 3

Fig 4

Fig 5

rgab.ru Берг АБ bergab@ya.ru Тел. (495)-228-06-21, факс (495) 22

rgab.ru Берг АБ bergab@ya.ru Тел. (495)-228-06-21, факс (495) 22

Mounting instructions for Y-bearing flanged units

with a composite (Y-TECH) or grey cast iron housing and an adapter sleeve

1 Mount any components that are on the shaft beween the two Y-bearing units.
2 Determine the position of the adapter sleeve on the shaft (➔ **fig** 1). Take into consideration that later during mounting
– the Y-bearing unit will move axially on the sleeve or vice versa
– the shaft will move axially against the Y-bearing unit.
This is particularly important when mounting the second Y-bearing unit.
3 Remove the nut and locking washer from the adapter sleeve (➔ **fig** 2).
4 Wipe the preservative from the bore and outside surface of the sleeve and oil them lightly with a thin oil.
5 Expand the adapter sleeve slightly by inserting a screwdriver in the slot of the sleeve and push the adapter sleeve into position on the shaft (➔ **fig** 3).
6 Slide the Y-bearing unit up onto the adapter sleeve.
7 Fasten the Y-bearing unit securely to the machine wall (➔ **fig** 4).
8 Install the locking washer and screw the lock nut onto the adapter sleeve until the Y-bearing unit is firmly in position on the sleeve.
9 Further tighten the lock nut
– with a hook spanner in the HN series to a tightening angle of about 90° (➔ **fig** 5) or
– with a TMHN lock nut spanner to the angle that is marked or
– with a torque wrench to the tightening torque indicated in **table** 2 on **page 173**.
10 Lock the nut in position by bending down a tab on the locking washer into one of the slots provided around the circumference of the nut (➔ **fig** 6).
11 Mount the second Y-bearing unit at the other end of the shaft following steps 2 through 9.
12 Make sure the shaft turns smoothly and the bearings are not jammed in place. If necessary, remove the last Y-bearing unit to be mounted, determine a new installation position for the adapter sleeve at the shaft and mount the Y-bearing unit again.
13 If the shaft turns smoothly, secure the Y-bearing unit on the adapter sleeve by bending down a tab on the locking washer into one of the slots provided around the circumference of the nut (➔ **fig** 6).

SKF
rgab.ru Берг АБ bergab@ya.ru Тел. (495)-228-06-21, факс (495) 22

rgab.ru Берг АБ bergab@ya.ru Тел. (495)-228-06-21, факс (495) 22

Fig 1

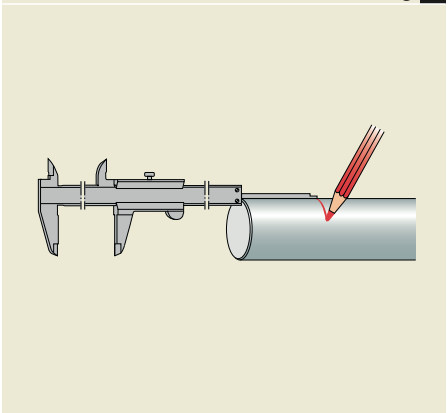

Fig 2

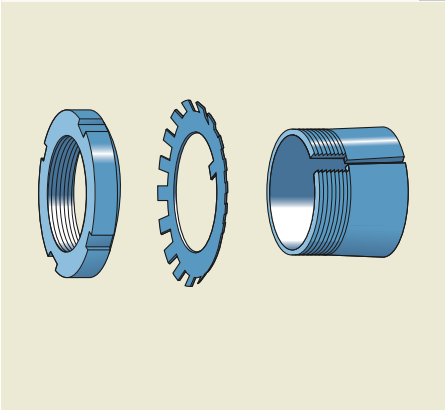

Fig 3

Fig 4

Fig 5

Fig 6

7

rgab.ru Берг АБ bergab@ya.ru Тел. (495)-228-06-21, факс (495) 22

rgab.ru Берг АБ bergab@ya.ru Тел. (495)-228-06-21, факс (495) 22

Mounting instructions for Y-bearing flanged units

with a pressed steel housing and grub screws

1 Mount any components that are on the shaft beween the two Y-bearing units.
2 Place one housing half into position on the machine wall with threaded fasteners (➔ **fig** 1).
3 With the locking device facing outward, slide the Y-bearing onto the shaft and into the housing half.
4 Place the second housing half into position over the Y-bearing (➔ **fig** 2).
5 Fit the threaded fasteners (nuts or bolts), but do not tighten them.
6 Mount the Y-bearing unit at the other end of the shaft, following steps 2 through 5.
7 Tighten the threaded fasteners holding the flanged units in place (➔ **fig** 3).
8 Align the shaft in the bearing arrangement axially and – if possible – turn it a few times.
9 Tighten the grub screws on both units (➔ **fig** 4) to the tightening torque indicated in **table** 1 on **page 172**.

rgab.ru Берг АБ bergab@ya.ru Тел. (495)-228-06-21, факс (495) 22

rgab.ru Берг АБ bergab@ya.ru Тел. (495)-228-06-21, факс (495) 22

Fig 1

Fig 2

Fig 3

Fig 4

rgab.ru Берг АБ bergab@ya.ru Тел. (495)-228-06-21, факс (495) 22

rgab.ru Берг АБ bergab@ya.ru Тел. (495)-228-06-21, факс (495) 22

Mounting instructions for Y-bearing flanged units

with a pressed steel housing and an eccentric locking collar

1 Mount any components that are on the shaft beween the two Y-bearing units.
2 Place one housing half into position on the machine wall with threaded fasteners (➔ **fig** 1).
3 With the eccentric locking collar removed, slide the Y-bearing onto the shaft and into the housing half with the locking device facing outwards.
4 Place the second housing half into position over the Y-bearing (➔ **fig** 2).
5 Fit the threaded fasteners (nuts or bolts), but do not tighten them.
6 Mount the Y-bearing unit at the other end of the shaft, following steps 2 through 5.
7 Tighten the threaded fasteners holding the flanged units in place (➔ **fig** 3).
8 Align the shaft in the bearing arrangement axially and – if possible – turn it a few times.
9 Place the eccentric locking collars on the inner ring extension of both Y-bearings and snug tighten them in the main direction of rotation (➔ **fig** 4).
10 Tighten the locking collars to their final positions using
  – a hook spanner with a stud engaging the hole in the circumference of the collar (➔ **fig** 5) or
  – a hammer and drift punch.
11 Tighten the grub screw in the eccentric locking collar of both units (➔ **fig** 6) to the tightening torque indicated in **table** 1 on **page 172**.

rgab.ru Берг АБ bergab@ya.ru Тел. (495)-228-06-21, факс (495) 22

rgab.ru Берг АБ bergab@ya.ru Тел. (495)-228-06-21, факс (495) 22

Fig 1

Fig 2

Fig 3

Fig 4

Fig 5

Fig 6

rgab.ru Берг АБ bergab@ya.ru Тел. (495)-228-06-21, факс (495) 22

rgab.ru Берг АБ bergab@ya.ru Тел. (495)-228-06-21, факс (495) 22

Mounting instructions for Y-bearing take-up units

with a grey cast iron housing and grub screws

1 Mount any components that are on the shaft beween the two Y-bearing units.
2 Slide the Y-bearing take-up units onto both shaft ends with the locking device facing outward
3 Install the shaft and Y-bearing take-up units into the take-up frame and connect the adjustment screws via the cast hole in the units.
4 Align the shaft in the bearing arrangement axially and – if possible – turn it a few times.
5 Tighten the grub screws on both Y-bearing take-up units to the tightening torque indicated in **table 1** on **page 172**.
6 If applicable, snap the end cover(s) into place.

rgab.ru Берг АБ bergab@ya.ru Тел. (495)-228-06-21, факс (495) 22

rgab.ru Берг АБ bergab@ya.ru Тел. (495)-228-06-21, факс (495) 22

Mounting instructions for Y-bearing take-up units

with a cast iron housing and an eccentric locking collar

1 Mount any components that are on the shaft beween the two Y-bearing units.
2 With the eccentric locking collar removed, slide the Y-bearing take-up units onto both shaft ends with the locking device facing outwards.
3 Install the shaft with the Y-bearing take-up units into the take-up frame and connect the adjustment screws via the cast hole in the units.
4 Align the shaft in the bearing arrangement axially and – if possible – turn it a few times.
5 Place the eccentric locking collars on the inner ring extension of both Y-bearing units and snug tighten them in the main direction of rotation.
6 Tighten the locking collars to their final positions using
   – a hook spanner with a stud engaging the hole in the circumference of the collar or
   – a hammer and drift punch.
7 Tighten the grub screw in the eccentric locking collar of both Y-bearing units to the tightening torque indicated in **table** 1 on **page 172**.
8 If applicable, snap the end cover(s) into place.

rgab.ru Берг АБ bergab@ya.ru Тел. (495)-228-06-21, факс (495) 22

rgab.ru Берг АБ bergab@ya.ru Тел. (495)-228-06-21, факс (495) 2

rgab.ru Берг АБ bergab@ya.ru Тел. (495)-228-06-21, факс (495) 2

rgab.ru Берг АБ bergab@ya.ru Тел. (495)-228-06-21, факс (495) 22

Other related SKF products

Y-bearing units for high temperatures **198**

ConCentra ball bearing units **200**
Design 201
Dimensions 201
Tolerances 201
Radial internal clearance 201
Misalignment 201
Load carrying ability of the housing 201
Attachment to the support surface 201
Grease fills 201
Product tables
ConCentra ball bearing units with a plummer block housing for metric shafts 202
ConCentra ball bearing units with a plummer block housing for inch shafts 203

ConCentra roller bearing units **204**

Collar mounted roller bearing units for inch shafts **205**

Two-bearing units **206**

Bearing housings **207**

Bearing greases **208**

Products for mounting and maintenance **208**

Condition monitoring **209**
SKF technology and service solutions 209
Condition monitoring products 209

rgab.ru Берг АБ bergab@ya.ru Тел. (495)-228-06-21, факс (495) 22

rgab.ru Берг АБ bergab@ya.ru Тел. (495)-228-06-21, факс (495) 22

The Y-bearing units listed in this catalogue only represent a part of the comprehensive SKF range that includes a variety of other ready-to-mount and ready-to-operate bearing units.

This range includes Y-bearing units for high temperature applications, which have to operate at extreme temperatures in the range –150 to +350 °C, or which have to withstand very large temperature differences.

ConCentra ball and roller bearing units also belong to this SKF range. These units are easy to install and allow true concentric locking onto the shaft. They are able to operate at high speeds or keep functioning even under difficult conditions. Their application range extends from fast running fans to low speed belt conveyors where they are exposed to the weather as well as dust and dirt.

Collar mounted roller bearing units have been very beneficial where installation conditions do not allow the use of SKF ConCentra roller bearing units or where the bearing arrangements are subjected to heavy loads at relatively slow speeds.

Two-bearing units are also included in the SKF bearing units range. These units were originally designed for use on fan shafts with an overhung impeller and with either belt or direct drive via a coupling.

Bearing housings also belong to the SKF manufacturing programme to match the wide range of application areas and possibilities for bearings with separate housings.

As the most significant provider of system solutions, SKF also offers an extensive assortment of products for maintenance and lubrication, including mechanical tools, heaters, hydraulic tools, instruments, lubricants and lubricators.

SKF Reliability Systems provides a single source of products and services to monitor the condition of a bearing arrangement or complete production lines and to help customers reduce total machine related costs, enhance productivity and strengthen profitability.

Y-bearing units for high temperatures

These SKF Y-bearing units belong to the SKF standard assortment and are designed for bearing arrangements which have to operate at extreme temperatures or which have to withstand large temperature fluctuations. They meet the widely differing engineering demands, like

- reduced machine operating costs,
- extended maintenance-free service life and
- high operational reliability

in a very wide temperature range, even in a severe environment. They should operate at low speeds. Experience has shown, however, that it is possible to run them at speeds up to 100 r/min.

The bearings inserted in these SKF Y-bearing units correspond in design to Y-bearings in the YAR 2-2FW series that use grub screws to lock the unit onto the shaft. These Y-bearings feature a large radial internal clearance along with special cages and seals. As with all high temperature bearings, the surfaces of the bearing are manganese phosphated to provide protection against corrosion and to improve running properties. Two different designs are available:

- The VA201 design is equipped with a pressed steel cage and pressed steel shields with flingers on both sides. These Y-bearings, which are lubricated with a high-temperature polyalkylene glycol graphite paste, are intended for operating temperatures between –40 and +250 °C.
- The VA228 design, like the VA201 design is equipped with shields and flingers. However, the VA228 design uses a “coronet” cage made from a special graphite that also serves as a lubricant. This design can provide many years of trouble-free operation without maintenance. The permissible operating temperature range for these bearings is between –150 and +350 °C.

rgab.ru Берг АБ bergab@ya.ru Тел. (495)-228-06-21, факс (495) 22

rgab.ru Берг АБ bergab@ya.ru Тел. (495)-228-06-21, факс (495) 22

Y-bearing units for high temperature applications have a grey cast iron housing with zinc-coated surfaces and are available in three different designs

- Y-bearing plummer block units,
- Y-bearing flanged units with a square housing and four bolt holes,
- Y-bearing flanged units with an oval housing and two bolt holes.

Detailed information about these Y-bearing units for high temperatures can be found in the SKF General Catalogue or in the “SKF Interactive Engineering Catalogue” on CD-ROM or online at www.skf.com.

rgab.ru Берг АБ bergab@ya.ru Тел. (495)-228-06-21, факс (495) 22

rgab.ru Берг АБ bergab@ya.ru Тел. (495)-228-06-21, факс (495) 22

ConCentra ball bearing units

ConCentra ball bearing units (➔ **fig 1**) are new within the SKF manufacturing programme. They are currently available as plummer block units for:

- metric shafts from 25 to 60 mm and
- inch shafts from 1 to 2 15/16 in.

They are identified by the series designation SY .. PF. SKF ConCentra ball bearing units are based on the cast iron SY plummer block units that are in use worldwide.

What sets the SKF ConCentra ball bearing unit apart from any other is its unique 360 degrees locking mechanism. The locking mechanism is based on two mating surfaces with precision engineered inclined serrations on their contact surfaces. The bearing bore and the outside surface of the stepped sleeve have a saw-toothed profile. Their mating surfaces respond to axial displacement by expanding and contracting evenly around the entire circumference of the shaft. The stepped sleeve is equipped with a mounting and a pressure collar (➔ **fig 2**). By tightening the grub (set) screws in the mounting collar, using the hexagonal key supplied with each unit, the pressure ring forces the inner ring up the inclined planes of the stepped sleeve to provide a true concentric tight fit on the shaft (➔ **fig 3**).

SKF ConCentra ball bearing units are designed for bearing arrangements, which

- make use of commercially available shafts, including hollow shafts,
- must withstand high speeds and moderate loads

but at the same time must meet demands such as longer service life, reduced noise and vibration levels, easy replacement and worldwide availability.

They can thus cover all requirements for bearing arrangements in ventilation systems where there is a need to run continuously and quietly for long periods of time without requiring very much attention.

Fig 1

Fig 2

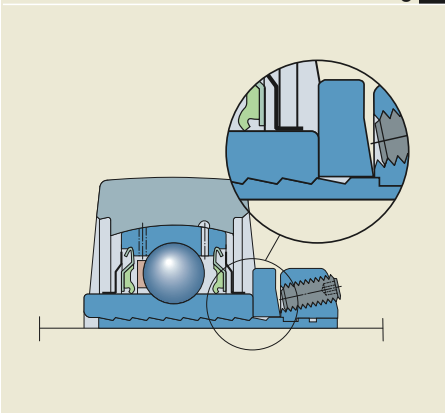

Fig 3

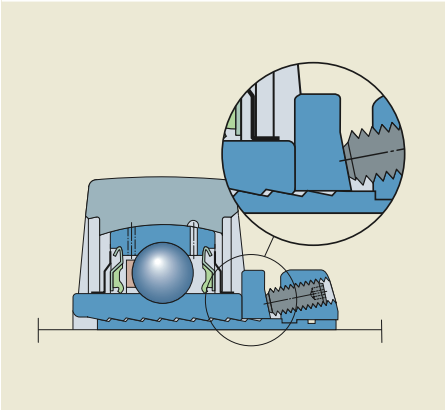

rgab.ru Берг АБ bergab@ya.ru Тел. (495)-228-06-21, факс (495) 22

rgab.ru Берг АБ bergab@ya.ru Тел. (495)-228-06-21, факс (495) 22

Design
SKF ConCentra ball bearing units are ready-to-mount and ready-to-operate. They are filled with high-quality long-lasting grease that provides maintenance-free operation in most cases. For operating conditions that make relubrication necessary, the units are provided with a grease nipple.

SKF ConCentra ball bearing units consist of

- ball bearings based on deep groove ball bearings in the 62 series with an inner ring extended on both sides, provided with the ConCentra locking technology and a convex sphered outer ring diameter and
- SY series plummer block housings with a sphered bore.

The product tables on **pages 202** and **203** list the boundary dimensions as well as the most important performance data of the SKF ConCentra ball bearing units for metric and inch shafts. Detailed information about these bearing units can be found in the product brochure 5107 "SKF ConCentra ball bearing units – true concentric locking, for fast, reliable mounting"

Dimensions
The boundary dimensions of SKF ConCentra ball bearing units with cast plummer block housing correspond to ISO 3228:1993, ANSI/ABMA 14-1995 and JIS B 1557-1995 where appropriate.

Tolerances
The tolerance for the shaft centre height H_1 above the support surface is

- ±0,25 mm for metric units with bore diameter up to and including 40 mm and for all inch size units,
- ±0,30 mm for the larger metric units,

The tolerance for the metric units corresponds to the values specified in ISO 3228:1993.

Radial internal clearance
SKF ConCentra ball bearing units are manufactured as standard with radial internal clearance to Group 3 according to ISO 9628:1992.

Misalignment
SKF ConCentra ball bearing units can accommodate up to 2 degrees of misalignment if they have to be relubricated during operation. Otherwise larger misalignment can be accommodated.

Load carrying ability of the housings
The housings are made of grey cast iron EN-GJL HB195 according to EN 1561:1997 and withstand the same dynamic and static loads as the bearings they incorporate.

Attachment to the support surface
SKF ConCentra ball bearing units have two bolt holes in the housing base through which they can be attached onto their support surface with attachment screws or threaded bolts and nuts.

Grease fills
SKF ConCentra ball bearing units of the standard design are filled with a premium long lasting lithium-calcium base grease of consistency 2 on the NLGI scale.

rgab.ru Берг АБ bergab@ya.ru Тел. (495)-228-06-21, факс (495) 22

rgab.ru Берг АБ bergab@ya.ru Тел. (495)-228-06-21, факс (495) 22

Con Centra Ball bearing units
with a plummer block housing for metric shafts

d **25 – 60** mm

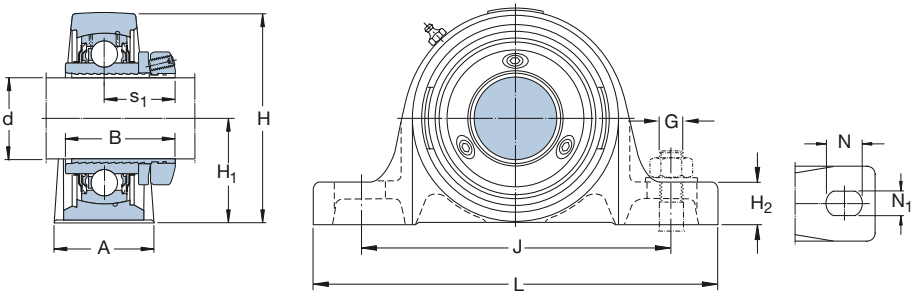

Shaft diameter d	Dimensions A	B	H	H_1	H_2	J	L	N	N_1	G	s_1	Basic load ratings dynamic C	static C_0	Limiting speed	Mass	Designation
mm	mm											kN		r/min	kg	–
25	36	41	70	36,5	16	102	130	19,5	11,5	10	29	14	7,8	7 000	0,85	**SY 25 PF**
30	40	45	82	42,9	17	117,5	152	23,5	14	12	31	19,5	11,2	6 300	1,20	**SY 30 PF**
35	45	47	93	47,6	19	126	160	21	14	12	32	25,5	15,3	5 300	1,55	**SY 35 PF**
40	48	51	99	49,2	19	135,5	175	24,5	14	12	34	30,7	19	4 800	2,05	**SY 40 PF**
45	48	52	107	54	21	143,5	187	22,5	14	12	35	33,2	21,6	4 300	2,25	**SY 45 PF**
50	54	54	114	57,2	22	157	203	26	18	16	36	35,1	23,2	4 000	2,70	**SY 50 PF**
55	60	57	125	63,5	24	171,5	219	27,5	18	16	37	43,6	29	3 600	3,85	**SY 55 PF**
60	60	59	137	69,9	26,5	190,5	240	29,5	18	16	38	52,7	36	3 400	5,00	**SY 60 PF**

rgab.ru Берг АБ bergab@ya.ru Тел. (495)-228-06-21, факс (495) 22

rgab.ru Берг АБ bergab@ya.ru Тел. (495)-228-06-21, факс (495) 22

Cont Centra Ball bearing units with a plummer block housing for inch shafts

d **1 – 2 15/16** in

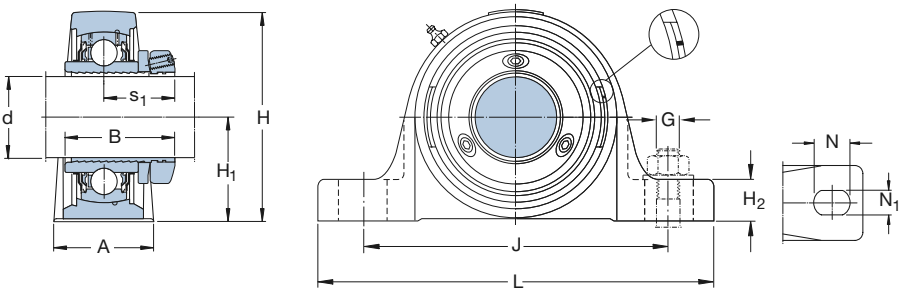

Shaft diameter d	Dimensions A	B	H	H_1	H_2	J	L	N	N_1	G	s_1	Basic load ratings dynamic C	static C_0	Limiting speed	Mass	Designation
in	mm											kN		r/min	kg	–
1	36,5	41,3	73	36,5	14,3	101,6	130	19	11,1	10	30,2	14	7,8	7 000	0,77	**SY 1.PF/AH**
1 3/16	39,7	46	84,1	42.9	17,5	117.5	152	23,8	14,3	12	33,3	19,5	11,2	6 300	1,30	**SY 1.3/16 PF/AH**
1 1/4	41,3	47,6	93,7	47,6	19	127	159	20,6	14,3	12	31,8	25,5	15,3	5 300	1,25	**SY 1.1/4 PF/AH**
1 3/8	41,3	47,6	93,7	47,6	19	127	159	20,6	14,3	12	31,8	25,5	15,3	5 300	1,60	**SY 1.3/8 PF/AH**
1 7/16	41,3	47,6	93,7	47,6	19	127	159	20,6	14,3	12	31,8	25,5	15,3	5 300	1,55	**SY 1.7/16 PF/AH**
1 1/2	44,4	50,8	100	49,2	19	135,7	174,6	25,4	14,3	12	33,3	30,7	19	4 800	1,95	**SY 1.1/2 PF/AH**
1 11/16	44,4	50,8	108	54	20,6	147,6	187,3	22,2	14,3	12	34,1	33,2	21,6	4 300	2,40	**SY 1.11/16 PF/AH**
1 15/16	47,6	55,6	115,9	57,2	22,2	157,2	203,2	25,4	17,5	16	37,3	35,1	23,2	4 000	2,85	**SY 1.15/16 PF/AH**
2 3/16	55,6	61,9	127	63,5	20,6	177,8	219	28,6	17,5	16	40,8	43,6	29	3 600	3,65	**SY 2.3/16 PF/AH**
2 7/16	63,5	58,9	138,1	69,9	25,4	190,5	241,3	28,6	17,5	16	37,7	52,7	36	3 400	5,00	**SY 2.7/16 PF/AH**
2 11/16	66,7	60,3	152,4	76,2	28,6	197	257	35	22.2	20	38,1	62,4	44	3 000	6,10	**SY 2.11/16 PF/AH**
2 15/16	69,9	65,1	165	82,5	31,8	216	270	35	22.2	20	41,3	66,3	49	2 600	7,25	**SY 2.15/16 PF/AH**

rgab.ru Берг АБ bergab@ya.ru Тел. (495)-228-06-21, факс (495) 22

rgab.ru Берг АБ bergab@ya.ru Тел. (495)-228-06-21, факс (495) 22

ConCentra roller bearing units

The standard product line of SKF ConCentra roller bearing units with the ConCentra locking technology includes SYT plummer block units for metric shafts from 35 to 75 mm diameter. To be able to truly meet the needs of each application, they are available

- with contact seals as well as with non-contact labyrinth seals,
- as locating or non-locating bearing units.

To complement the standard metric line, SKF ConCentra roller bearing units are also available as

- plummer block units in the SYR .. N, SYE .. N and FSYE .. N series and
- take-up units in the TBR .. N series

for inch size shafts from 1 7/16 to 4 in. These bearing units have been introduced to the US market and are dimensionally interchangeable with competitors' products.

More detailed information about SKF ConCentra roller bearing units with plummer block housing can be found in the product brochure 5103 "SKF ConCentra roller bearing units for fast and reliable mounting" and in the "SKF Interactive Engineering Catalogue" on CD-ROM or online at www.skf.com.

The boundary dimensions of plummer block units

- for the SYR series match those of the PB24400H, S2000 and ZA series,
- for the SYE and FSYE series match those of the E, EPB22400H or EPB22400FH and ZEP series

of the respective competitors.

The boundary dimensions of take-up units

- for the TBR series match those of the ZT2000, ZT5000, TB22400H and S2000 E series

of the respective competitors.

rgab.ru Берг АБ bergab@ya.ru Тел. (495)-228-06-21, факс (495) 22

rgab.ru Берг АБ bergab@ya.ru Тел. (495)-228-06-21, факс (495) 22

Collar mounted roller bearing units for inch shafts

In addition to SKF ConCentra roller bearing units, the SKF bearing unit range also includes collar mounted

- plummer block units in the SYR, SYE and FSYE series,
- flanged units in the FYE, FYR and FYRP series and
- take-up units in the TBR series.

These bearing units are held in place with a locking collar and two grub screws that grip the shaft through drilled holes in the inner ring.

Additional information about these collar mounted bearing units can be found in the "Interactive SKF Engineering Catalogue" on CD-ROM or online at www.skf.com.

The boundary dimensions of plummer block units

- for the SYR series match those of the PB24400H, S2000 and ZA series,
- for the SYE and FSYE series match those of the E, EPB22400H or EPB22400FH and ZEP series

of the respective competitors.

The boundary dimensions of flanged units

- for the FYR series match those of the ZB, FB22400H and S2000 E series,
- for the FYRP series match those of the ZBR, FCB22400H and S2000E series

of the respective competitors.

The boundary dimensions of take-up units

- for the TBR series match those of the ZT2000, ZT5000, TB22400H and S2000 E series

of the respective competitors.

rgab.ru Берг АБ bergab@ya.ru Тел. (495)-228-06-21, факс (495) 22

rgab.ru Берг АБ bergab@ya.ru Тел. (495)-228-06-21, факс (495) 22

Two-bearing units

Two-bearing units have several advantages over the more conventional bearing arrangements where two self-aligning ball bearings or two spherical roller bearings are mounted in separate plummer block housings. These include

- a more compact design, because there is only one housing and the bearings do not need to be self-aligning,
- improved running accuracy, because stiff bearings can be used,
- quiet operation, because the bearings supporting the shaft are contained in a single housing and bearing alignment is accurate,
- easy installation, because it is only necessary to bolt the unit to its support surface and the other components need only to be mounted on the already finished shaft ends, virtually eliminating the risk of contaminating or otherwise damaging the bearings during installation.

Additional benefits include the cost savings associated with fewer components to order, stock and replace.

The trend toward higher pressures in fan applications involves increasing shaft speeds, and this tends to increase axial loads. Therefore two of the standard series of two-bearing units have two bearings on the locating side to accommodate the heavier axial load.

Detailed information about these bearing units can be found in the “SKF Interactive Engineering Catalogue” on CD-ROM or online at www.skf.com.

rgab.ru Берг АБ bergab@ya.ru Тел. (495)-228-06-21, факс (495) 22

rgab.ru Берг АБ bergab@ya.ru Тел. (495)-228-06-21, факс (495) 22

Bearing housings

If the application or operating conditions exceed the capabilities of bearing units, standard bearing housings containing self-aligning ball and roller bearings can be used. These cost-effective housings and bearings can provide reliable performance even under extreme conditions.

As a leading supplier of rolling bearings, SKF produces housings in a wide range of designs and sizes that are based on experience collected in all industrial areas. Among others, SKF housings have the following advantages:

- large assortment of design and sizes,
- high quality of design and manufacture,
- worldwide availability.

Plummer (pillow) block housings in the SNL 2, 3, 5, 6, 30, 31, 32 and 40 series are the most common housings and have additional advantages:

- short delivery times,
- long term supply stability,
- no minimum order quantities,
- simplified ordering and stocking.

Detailed information about these housings can be found in

- product brochure 4403 “SNL plummer block housings solve the housing problems”,
- product brochure 5101 “SNL 30 and 31 plummer block housings solve the housing problems” and
- SKF Interactive Engineering Catalogue on CD-ROM or online at www.skf.com.

Other bearing housings in the SKF standard range, include

- split plummer (pillow) block housings,
- one-piece plummer block housings,
- flanged housings, or
- take-up housings.

For detailed information about these housings, please contact the SKF application engineering service.

rgab.ru Берг АБ bergab@ya.ru Тел. (495)-228-06-21, факс (495) 22

rgab.ru Берг АБ bergab@ya.ru Тел. (495)-228-06-21, факс (495) 22

Bearing greases

Whatever the bearing arrangement, it consists of more than just a bearing or bearing unit. There are components like the shaft, seals, holding devices and the lubricant that must all work together in order for the bearing to realize maximum service life. The lubricant is an extremely important factor in the equation for long service life – which is why SKF offers fifteen different bearing greases, each designed and formulated for a particular type of application or environment. However, for applications running under "normal" conditions, most ball and roller bearing units can be relubricated using one of the following SKF greases:

- SKF grease LGWA 2 for a wide temperature range,
- SKF multi-purpose greases LGMT 2 and LGMT 3,
- SKF high-pressure grease LGEP 2 or
- food-grade SKF grease LGFP 2.

For detailed information about SKF bearing greases, please refer to the catalogue MP3000 "SKF Maintenance and Lubrication Products" or visit www.mapro.skf.com.

Products for mounting and maintenance

In addition to bearings and seals, SKF also carries a full line of maintenance and lubrication tools and supplies:

- hook spanners with external tab, HN series,
- spanner sets for sleeve nuts, TMHN series,
- bearing greases,
- grease guns,
- grease meters,
- automatic lubricators.

For detailed information about SKF products for mounting and maintenance, please refer to the catalogue MP3000 "SKF Maintenance and Lubrication Products" or visit www.mapro.skf.com.

rgab.ru Берг АБ bergab@ya.ru Тел. (495)-228-06-21, факс (495) 22

rgab.ru Берг АБ bergab@ya.ru Тел. (495)-228-06-21, факс (495) 22

Condition monitoring

The thorough understanding of machine components, systems and related processes, enables SKF to create and provide realistic solutions for optimum machine and process reliability and productivity.

Close working partnerships with customers worldwide has provided SKF with an extensive knowledge of applications in virtually every industry. As a result, SKF has learned to apply the most relevant of today's emerging technologies to industry-specific applications.

SKF technology and service solutions
SKF Reliability Systems offers the most important services and products to provide solutions to the real-life application conditions. The goal is to help customers reduce total machine related costs, enhance productivity and strengthen profitability. Whatever the requirements, SKF offers the knowledge, services and products needed to achieve specific business goals.

For detailed information about the SKF Reliability Systems programme please refer to publication 5160 "The Guide to Asset Efficiency Optimization for Improved Profitability" or visit www.skfreliability.com to see the latest information on strategies and services.

Condition monitoring products
At the core of the SKF product range are the vibration detection, analysis and diagnostic products, which enable process monitoring as an added benefit. More information about SKF condition monitoring products can be found online at www.skf.com.

Besides products for vibration detection, the SKF range of products includes all instruments needed to

- measure temperature, speed or noise,
- align shafts or pulleys,
- check oil contamination.

This product line includes small hand devices as well as complex monitoring systems for stationary installation and continuous monitoring in combination with preventive maintenance.

rgab.ru Берг АБ bergab@ya.ru Тел. (495)-228-06-21, факс (495) 22

rgab.ru Берг АБ bergab@ya.ru Тел. (495)-228-06-21, факс (495) 2

rgab.ru Берг АБ bergab@ya.ru Тел. (495)-228-06-21, факс (495) 2

rgab.ru Берг АБ bergab@ya.ru Тел. (495)-228-06-21, факс (495) 22

Product index

The product range listed in this catalogue includes about 900 Y-bearings, Y-bearing units, Y-bearing housings, rubber seating rings, end covers and adapter sleeves. In order to enable the user to quickly find the technical data for a product known only by its designation, the products are listed by designation in alphanumerical order in this index. Each entry lists the page number on which the product can be found and gives a brief description of the product.

rgab.ru Берг АБ bergab@ya.ru Тел. (495)-228-06-21, факс (495) 22

rgab.ru Берг АБ bergab@ya.ru Тел. (495)-228-06-21, факс (495) 22

Designation	Product	Page
1726203-2RS1	Y-bearing with a standard inner ring	72
1726204-2RS1	Y-bearing with a standard inner ring	72
1726205-2RS1	Y-bearing with a standard inner ring	72
1726206-2RS1	Y-bearing with a standard inner ring	72
1726207-2RS1	Y-bearing with a standard inner ring	72
1726208-2RS1	Y-bearing with a standard inner ring	72
1726209-2RS1	Y-bearing with a standard inner ring	72
1726210-2RS1	Y-bearing with a standard inner ring	72
1726211-2RS1	Y-bearing with a standard inner ring	72
1726212-2RS1	Y-bearing with a standard inner ring	72
1726305-2RS1	Y-bearing with a standard inner ring	72
1726306-2RS1	Y-bearing with a standard inner ring	72
1726307-2RS1	Y-bearing with a standard inner ring	72
1726308-2RS1	Y-bearing with a standard inner ring	72
1726309-2RS1	Y-bearing with a standard inner ring	72
1726310-2RS1	Y-bearing with a standard inner ring	72
ECY 204	End cover	41
ECY 205	End cover	41
ECY 206	End cover	41
ECY 207	End cover	41
ECY 208	End cover	41
ECY 209	End cover	41
ECY 210	End cover	41
ECY 211	End cover	41
ECY 212	End cover	41
ECY 213	End cover	41
FY 1.TF	Y-bearing flanged unit with square cast housing and grub screws	130
FY 1.1/2 TF	Y-bearing flanged unit with square cast housing and grub screws	130
FY 1.1/4 TF	Y-bearing flanged unit with square cast housing and grub screws	130
FY 1.3/4 TF	Y-bearing flanged unit with square cast housing and grub screws	132
FY 12 TF	Y-bearing flanged unit with square cast housing and grub screws	130
FY 15 FM	Y-bearing flanged unit with square cast housing and eccentric locking collar	134
FY 15 TF	Y-bearing flanged unit with square cast housing and grub screws	130
FY 17 FM	Y-bearing flanged unit with square cast housing and eccentric locking collar	134
FY 17 TF	Y-bearing flanged unit with square cast housing and grub screws	130
FY 2. TF	Y-bearing flanged unit with square cast housing and grub screws	132
FY 2.1/2 TF	Y-bearing flanged unit with square cast housing and grub screws	132
FY 20 FM	Y-bearing flanged unit with square cast housing and eccentric locking collar	134
FY 20 TF	Y-bearing flanged unit with square cast housing and grub screws	130
FY 20 TR	Y-bearing flanged unit with square cast housing and grub screws	130
FY 20 WF	Y-bearing flanged unit with square cast housing and eccentric locking collar	134
FY 25 FM	Y-bearing flanged unit with square cast housing and eccentric locking collar	134
FY 25 TF	Y-bearing flanged unit with square cast housing and grub screws	130
FY 25 TR	Y-bearing flanged unit with square cast housing and grub screws	130
FY 25 WF	Y-bearing flanged unit with square cast housing and eccentric locking collar	134
FY 3/4 TF	Y-bearing flanged unit with square cast housing and grub screws	130
FY 30 FM	Y-bearing flanged unit with square cast housing and eccentric locking collar	134
FY 30 TF	Y-bearing flanged unit with square cast housing and grub screws	130
FY 30 TR	Y-bearing flanged unit with square cast housing and grub screws	130
FY 30 WF	Y-bearing flanged unit with square cast housing and eccentric locking collar	134
FY 35 FM	Y-bearing flanged unit with square cast housing and eccentric locking collar	134
FY 35 TF	Y-bearing flanged unit with square cast housing and grub screws	130
FY 35 TR	Y-bearing flanged unit with square cast housing and grub screws	130
FY 35 WF	Y-bearing flanged unit with square cast housing and eccentric locking collar	134
FY 40 FM	Y-bearing flanged unit with square cast housing and eccentric locking collar	134
FY 40 TF	Y-bearing flanged unit with square cast housing and grub screws	130
FY 40 TR	Y-bearing flanged unit with square cast housing and grub screws	130
FY 40 WF	Y-bearing flanged unit with square cast housing and eccentric locking collar	134
FY 45 FM	Y-bearing flanged unit with square cast housing and eccentric locking collar	134
FY 45 TF	Y-bearing flanged unit with square cast housing and grub screws	132
FY 45 TR	Y-bearing flanged unit with square cast housing and grub screws	132
FY 45 WF	Y-bearing flanged unit with square cast housing and eccentric locking collar	134
FY 50 FM	Y-bearing flanged unit with square cast housing and eccentric locking collar	134
FY 50 TF	Y-bearing flanged unit with square cast housing and grub screws	132
FY 50 TR	Y-bearing flanged unit with square cast housing and grub screws	132
FY 50 WF	Y-bearing flanged unit with square cast housing and eccentric locking collar	134
FY 55 FM	Y-bearing flanged unit with square cast housing and eccentric locking collar	134
FY 55 TF	Y-bearing flanged unit with square cast housing and grub screws	132
FY 55 TR	Y-bearing flanged unit with square cast housing and grub screws	132
FY 55 WF	Y-bearing flanged unit with square cast housing and eccentric locking collar	134
FY 60 FM	Y-bearing flanged unit with square cast housing and eccentric locking collar	134
FY 60 TF	Y-bearing flanged unit with square cast housing and grub screws	132
FY 60 TR	Y-bearing flanged unit with square cast housing and grub screws	132

rgab.ru Берг АБ bergab@ya.ru Тел. (495)-228-06-21, факс (495) 22

rgab.ru Берг АБ bergab@ya.ru Тел. (495)-228-06-21, факс (495) 22

Designation	Product	Page
FY 60 WF	Y-bearing flanged unit with square cast housing and an eccentric locking collar	134
FY 65 TF	Y-bearing flanged unit with square cast housing and grub screws	132
FY 503 M	Flanged housing with square flange, cast iron	131
FY 504 M	Flanged housing with square flange, cast iron	131
FY 505 M	Flanged housing with square flange, cast iron	131
FY 506 M	Flanged housing with square flange, cast iron	131
FY 507 M	Flanged housing with square flange, cast iron	131
FY 508 M	Flanged housing with square flange, cast iron	131
FY 509 M	Flanged housing with square flange, cast iron	133
FY 510 M	Flanged housing with square flange, cast iron	133
FY 511 M	Flanged housing with square flange, cast iron	133
FY 512 M	Flanged housing with square flange, cast iron	133
FY 513 M	Flanged housing with square flange, cast iron	133
FYC 20 TF	Y-bearing flanged unit with round cast housing and grub screws	148
FYC 25 TF	Y-bearing flanged unit with round cast housing and grub screws	148
FYC 30 TF	Y-bearing flanged unit with round cast housing and grub screws	148
FYC 35 TF	Y-bearing flanged unit with round cast housing and grub screws	148
FYC 40 TF	Y-bearing flanged unit with round cast housing and grub screws	148
FYC 45 TF	Y-bearing flanged unit with round cast housing and grub screws	148
FYC 50 TF	Y-bearing flanged unit with round cast housing and grub screws	148
FYC 55 TF	Y-bearing flanged unit with round cast housing and grub screws	148
FYC 60 TF	Y-bearing flanged unit with round cast housing and grub screws	148
FYC 65 TF	Y-bearing flanged unit with round cast housing and grub screws	148
FYC 504	Flanged housing with round flange, cast iron	149
FYC 505	Flanged housing with round flange, cast iron	149
FYC 506	Flanged housing with round flange, cast iron	149
FYC 507	Flanged housing with round flange, cast iron	149
FYC 508	Flanged housing with round flange, cast iron	149
FYC 509	Flanged housing with round flange, cast iron	149
FYC 510	Flanged housing with round flange, cast iron	149
FYC 511	Flanged housing with round flange, cast iron	149
FYC 512	Flanged housing with round flange, cast iron	149
FYC 513	Flanged housing with round flange, cast iron	149
FYJ 1.TF	Y-bearing flanged unit with square cast housing and grub screws	130
FYJ 1.1/2 TF	Y-bearing flanged unit with square cast housing and grub screws	130
FYJ 1.1/4 TF	Y-bearing flanged unit with square cast housing and grub screws	130
FYJ 1.3/4 TF	Y-bearing flanged unit with square cast housing and grub screws	132
FYJ 100 TF	Y-bearing flanged unit with square cast housing and grub screws	132
FYJ 2. TF	Y-bearing flanged unit with square cast housing and grub screws	132
FYJ 2.1/2 TF	Y-bearing flanged unit with square cast housing and grub screws	132
FYJ 20 TF	Y-bearing flanged unit with square cast housing and grub screws	130
FYJ 25 KF	Y-bearing flanged unit with square cast housing and tapered bore	136
FYJ 25 TF	Y-bearing flanged unit with square cast housing and grub screws	130
FYJ 3/4 TF	Y-bearing flanged unit with square cast housing and grub screws	130
FYJ 30 KF	Y-bearing flanged unit with square cast housing and tapered bore	136
FYJ 30 TF	Y-bearing flanged unit with square cast housing and grub screws	130
FYJ 35 KF	Y-bearing flanged unit with square cast housing and tapered bore	136
FYJ 35 TF	Y-bearing flanged unit with square cast housing and grub screws	130
FYJ 40 KF	Y-bearing flanged unit with square cast housing and tapered bore	136
FYJ 40 TF	Y-bearing flanged unit with square cast housing and grub screws	130
FYJ 45 KF	Y-bearing flanged unit with square cast housing and tapered bore	136
FYJ 45 TF	Y-bearing flanged unit with square cast housing and grub screws	132
FYJ 50 KF	Y-bearing flanged unit with square cast housing and tapered bore	136
FYJ 50 TF	Y-bearing flanged unit with square cast housing and grub screws	132
FYJ 55 KF	Y-bearing flanged unit with square cast housing and tapered bore	136
FYJ 55 TF	Y-bearing flanged unit with square cast housing and grub screws	132
FYJ 60 KF	Y-bearing flanged unit with square cast housing and tapered bore	138
FYJ 60 TF	Y-bearing flanged unit with square cast housing and grub screws	132
FYJ 65 KF	Y-bearing flanged unit with square cast housing and tapered bore	138
FYJ 65 TF	Y-bearing flanged unit with square cast housing and grub screws	132
FYJ 70 TF	Y-bearing flanged unit with square cast housing and grub screws	132
FYJ 75 TF	Y-bearing flanged unit with square cast housing and grub screws	132
FYJ 80 TF	Y-bearing flanged unit with square cast housing and grub screws	132
FYJ 90 TF	Y-bearing flanged unit with square cast housing and grub screws	132
FYJ 504	Flanged housing with square flange, cast iron	131
FYJ 505	Flanged housing with square flange, cast iron	131
FYJ 506	Flanged housing with square flange, cast iron	131
FYJ 507	Flanged housing with square flange, cast iron	131
FYJ 508	Flanged housing with square flange, cast iron	131
FYJ 509	Flanged housing with square flange, cast iron	133
FYJ 510	Flanged housing with square flange, cast iron	133
FYJ 511	Flanged housing with square flange, cast iron	133
FYJ 512	Flanged housing with square flange, cast iron	133

rgab.ru Берг АБ bergab@ya.ru Тел. (495)-228-06-21, факс (495) 22

rgab.ru Берг АБ bergab@ya.ru Тел. (495)-228-06-21, факс (495) 22

Designation	Product	Page
FYJ 513	Flanged housing with square flange, cast iron	133
FYJ 514	Flanged housing with square flange, cast iron	133
FYJ 515	Flanged housing with square flange, cast iron	133
FYJ 516	Flanged housing with square flange, cast iron	133
FYJ 518	Flanged housing with square flange, cast iron	133
FYJ 520	Flanged housing with square flange, cast iron	133
FYK 20 TF	Flanged Y-TECH unit with square housing and grub screws	122
FYK 20 TR	Flanged Y-TECH unit with square housing and grub screws	122
FYK 25 TF	Flanged Y-TECH unit with square housing and grub screws	122
FYK 25 TR	Flanged Y-TECH unit with square housing and grub screws	122
FYK 30 TF	Flanged Y-TECH unit with square housing and grub screws	122
FYK 30 TR	Flanged Y-TECH unit with square housing and grub screws	122
FYK 35 TF	Flanged Y-TECH unit with square housing and grub screws	122
FYK 35 TR	Flanged Y-TECH unit with square housing and grub screws	122
FYK 40 TF	Flanged Y-TECH unit with square housing and grub screws	122
FYK 40 TR	Flanged Y-TECH unit with square housing and grub screws	122
FYK 504	Flanged Y-TECH housing with square flange, black	123
FYK 505	Flanged Y-TECH housing with square flange, black	123
FYK 506	Flanged Y-TECH housing with square flange, black	123
FYK 507	Flanged Y-TECH housing with square flange, black	123
FYK 508	Flanged Y-TECH housing with square flange, black	123
FYKC 20 NTH	Flanged Y-TECH unit with square housing and grub screws, regreaseable	124
FYKC 25 NTH	Flanged Y-TECH unit with square housing and grub screws, regreaseable	124
FYKC 30 NTH	Flanged Y-TECH unit with square housing and grub screws, regreaseable	124
FYKC 35 NTH	Flanged Y-TECH unit with square housing and grub screws, regreaseable	124
FYKC 40 NTH	Flanged Y-TECH unit with square housing and grub screws, regreaseable	124
FYKC 504 N	Flanged Y-TECH housing with square flange, grease nipple, white	125
FYKC 505 N	Flanged Y-TECH housing with square flange, grease nipple, white	125
FYKC 506 N	Flanged Y-TECH housing with square flange, grease nipple, white	125
FYKC 507 N	Flanged Y-TECH housing with square flange, grease nipple, white	125
FYKC 508 N	Flanged Y-TECH housing with square flange, grease nipple, white	125
FYTB 1. TF	Y-bearing flanged unit with oval cast housing and grub screws	140
FYTB 1.1/2 TF	Y-bearing flanged unit with oval cast housing and grub screws	140
FYTB 1.1/4 TF	Y-bearing flanged unit with oval cast housing and grub screws	140
FYTB 1.3/4 TF	Y-bearing flanged unit with oval cast housing and grub screws	142
FYTB 12 TF	Y-bearing flanged unit with oval cast housing and grub screws	140
FYTB 15 FM	Y-bearing flanged unit with oval cast housing and eccentric locking collar	144
FYTB 15 TF	Y-bearing flanged unit with oval cast housing and grub screws	140
FYTB 17 FM	Y-bearing flanged unit with oval cast housing and eccentric locking collar	144
FYTB 17 TF	Y-bearing flanged unit with oval cast housing and grub screws	140
FYTB 20 FM	Y-bearing flanged unit with oval cast housing and eccentric locking collar	144
FYTB 20 TF	Y-bearing flanged unit with oval cast housing and grub screws	140
FYTB 20 TR	Y-bearing flanged unit with oval cast housing and grub screws	140
FYTB 20 WF	Y-bearing flanged unit with oval cast housing and eccentric locking collar	144
FYTB 25 FM	Y-bearing flanged unit with oval cast housing and eccentric locking collar	144
FYTB 25 TF	Y-bearing flanged unit with oval cast housing and grub screws	140
FYTB 25 TR	Y-bearing flanged unit with oval cast housing and grub screws	140
FYTB 25 WF	Y-bearing flanged unit with oval cast housing and eccentric locking collar	144
FYTB 3/4 TF	Y-bearing flanged unit with oval cast housing and grub screws	140
FYTB 30 FM	Y-bearing flanged unit with oval cast housing and eccentric locking collar	144
FYTB 30 TF	Y-bearing flanged unit with oval cast housing and grub screws	140
FYTB 30 TR	Y-bearing flanged unit with oval cast housing and grub screws	140
FYTB 30 WF	Y-bearing flanged unit with oval cast housing and eccentric locking collar	144
FYTB 35 FM	Y-bearing flanged unit with oval cast housing and eccentric locking collar	144
FYTB 35 TF	Y-bearing flanged unit with oval cast housing and grub screws	140
FYTB 35 TR	Y-bearing flanged unit with oval cast housing and grub screws	140
FYTB 35 WF	Y-bearing flanged unit with oval cast housing and eccentric locking collar	144
FYTB 40 FM	Y-bearing flanged unit with oval cast housing and eccentric locking collar	144
FYTB 40 TF	Y-bearing flanged unit with oval cast housing and grub screws	142
FYTB 40 TR	Y-bearing flanged unit with oval cast housing and grub screws	142
FYTB 40 WF	Y-bearing flanged unit with oval cast housing and eccentric locking collar	144
FYTB 45 FM	Y-bearing flanged unit with oval cast housing and eccentric locking collar	144
FYTB 45 TF	Y-bearing flanged unit with oval cast housing and grub screws	142
FYTB 45 TR	Y-bearing flanged unit with oval cast housing and grub screws	142
FYTB 45 WF	Y-bearing flanged unit with oval cast housing and eccentric locking collar	144
FYTB 50 FM	Y-bearing flanged unit with oval cast housing and eccentric locking collar	144
FYTB 50 TF	Y-bearing flanged unit with oval cast housing and grub screws	142
FYTB 50 TR	Y-bearing flanged unit with oval cast housing and grub screws	142
FYTB 50 WF	Y-bearing flanged unit with oval cast housing and eccentric locking collar	144
FYTB 503 M	Flanged housing with oval flange, cast iron	141
FYTB 504 M	Flanged housing with oval flange, cast iron	141
FYTB 505 M	Flanged housing with oval flange, cast iron	141

rgab.ru Берг АБ bergab@ya.ru Тел. (495)-228-06-21, факс (495) 22

rgab.ru Берг АБ bergab@ya.ru Тел. (495)-228-06-21, факс (495) 22

Designation	Product	Page
FYTB 506 M	Flanged housing with oval flange, cast iron	141
FYTB 507 M	Flanged housing with oval flange, cast iron	141
FYTB 508 M	Flanged housing with oval flange, cast iron	141
FYTB 509 M	Flanged housing with oval flange, cast iron	143
FYTB 510 M	Flanged housing with oval flange, cast iron	143
FYTBK 20 TF	Flanged Y-TECH unit with oval housing and grub screws	126
FYTBK 20 TR	Flanged Y-TECH unit with oval housing and grub screws	126
FYTBK 25 TF	Flanged Y-TECH unit with oval housing and grub screws	126
FYTBK 25 TR	Flanged Y-TECH unit with oval housing and grub screws	126
FYTBK 30 TF	Flanged Y-TECH unit with oval housing and grub screws	126
FYTBK 30 TR	Flanged Y-TECH unit with oval housing and grub screws	126
FYTBK 35 TF	Flanged Y-TECH unit with oval housing and grub screws	126
FYTBK 35 TR	Flanged Y-TECH unit with oval housing and grub screws	126
FYTBK 504	Flanged Y-TECH housing with oval flange, black	127
FYTBK 505	Flanged Y-TECH housing with oval flange, black	127
FYTBK 506	Flanged Y-TECH housing with oval flange, black	127
FYTBK 507	Flanged Y-TECH housing with oval flange, black	127
FYTBKC 20 NTH	Flanged Y-TECH unit with oval housing and grub screws, regreaseable	128
FYTBKC 25 NTH	Flanged Y-TECH unit with oval housing and grub screws, regreaseable	128
FYTBKC 30 NTH	Flanged Y-TECH unit with oval housing and grub screws, regreaseable	128
FYTBKC 35 NTH	Flanged Y-TECH unit with oval housing and grub screws, regreaseable	128
FYTBKC 504 N	Flanged Y-TECH housing with oval flange, grease nipple, white	129
FYTBKC 505 N	Flanged Y-TECH housing with oval flange, grease nipple, white	129
FYTBKC 506 N	Flanged Y-TECH housing with oval flange, grease nipple, white	129
FYTBKC 507 N	Flanged Y-TECH housing with oval flange, grease nipple, white	129
FYTJ 1. TF	Y-bearing flanged unit with oval cast housing and grub screws	140
FYTJ 1.1/2 TF	Y-bearing flanged unit with oval cast housing and grub screws	140
FYTJ 1.1/4 TF	Y-bearing flanged unit with oval cast housing and grub screws	140
FYTJ 1.3/4 TF	Y-bearing flanged unit with oval cast housing and grub screws	142
FYTJ 20 TF	Y-bearing flanged unit with oval cast housing and grub screws	140
FYTJ 25 KF	Y-bearing flanged unit with oval cast housing and tapered bore	146
FYTJ 25 TF	Y-bearing flanged unit with oval cast housing and grub screws	140
FYTJ 3/4 TF	Y-bearing flanged unit with oval cast housing and grub screws	140
FYTJ 30 KF	Y-bearing flanged unit with oval cast housing and tapered bore	146
FYTJ 30 TF	Y-bearing flanged unit with oval cast housing and grub screws	140
FYTJ 35 KF	Y-bearing flanged unit with oval cast housing and tapered bore	146
FYTJ 35 TF	Y-bearing flanged unit with oval cast housing and grub screws	140
FYTJ 40 KF	Y-bearing flanged unit with oval cast housing and tapered bore	146
FYTJ 40 TF	Y-bearing flanged unit with oval cast housing and grub screws	142
FYTJ 45 KF	Y-bearing flanged unit with oval cast housing and tapered bore	146
FYTJ 45 TF	Y-bearing flanged unit with oval cast housing and grub screws	142
FYTJ 50 KF	Y-bearing flanged unit with oval cast housing and tapered bore	146
FYTJ 50 TF	Y-bearing flanged unit with oval cast housing and grub screws	142
FYTJ 504	Flanged housing with oval flange, cast iron	141
FYTJ 505	Flanged housing with oval flange, cast iron	141
FYTJ 506	Flanged housing with oval flange, cast iron	141
FYTJ 507	Flanged housing with oval flange, cast iron	141
FYTJ 508	Flanged housing with oval flange, cast iron	141
FYTJ 509	Flanged housing with oval flange, cast iron	143
FYTJ 510	Flanged housing with oval flange, cast iron	143
H 2305	Adapter sleeve	70
H 2306	Adapter sleeve	70
H 2307	Adapter sleeve	70
H 2308	Adapter sleeve	70
H 2309	Adapter sleeve	70
H 2310	Adapter sleeve	70
H 2311	Adapter sleeve	70
H 2312	Adapter sleeve	71
H 2313	Adapter sleeve	71
HA 2306	Adapter sleeve	70
HA 2307	Adapter sleeve	70
HA 2309	Adapter sleeve	70
HA 2310	Adapter sleeve	70
HA 2311	Adapter sleeve	70
HA 2313	Adapter sleeve	71
HE 2305	Adapter sleeve	70
HE 2306	Adapter sleeve	70
HE 2308	Adapter sleeve	70
HE 2309	Adapter sleeve	70
HE 2310	Adapter sleeve	70
HE 2311 B	Adapter sleeve	70

rgab.ru Берг АБ bergab@ya.ru Тел. (495)-228-06-21, факс (495) 22

rgab.ru Берг АБ bergab@ya.ru Тел. (495)-228-06-21, факс (495) 22

Designation	Product	Page
HE 2313	Adapter sleeve	71
HS 2310	Adapter sleeve	70
HS 2312	Adapter sleeve	71
HS 2313	Adapter sleeve	71
P 1. FM	Y-bearing plummer block unit with pressed steel housing and eccentric locking collar	106
P 1. TF	Y-bearing plummer block unit with pressed steel housing and grub screws	102
P 1. TR	Y-bearing plummer block unit with pressed steel housing and grub screws	102
P 1.1/2 FM	Y-bearing plummer block unit with pressed steel housing and eccentric locking collar	106
P 1.1/2 TF	Y-bearing plummer block unit with pressed steel housing and grub screws	104
P 1.1/2 TR	Y-bearing plummer block unit with pressed steel housing and grub screws	104
P 1.1/4 TF	Y-bearing plummer block unit with pressed steel housing and grub screws	102
P 1.1/4 TR	Y-bearing plummer block unit with pressed steel housing and grub screws	102
P 1.3/4 TF	Y-bearing plummer block unit with pressed steel housing and grub screws	104
P 1.3/4 TR	Y-bearing plummer block unit with pressed steel housing and grub screws	104
P 12 TF	Y-bearing plummer block unit with pressed steel housing and grub screws	102
P 15 FM	Y-bearing plummer block unit with pressed steel housing and eccentric locking collar	106
P 15 TF	Y-bearing plummer block unit with pressed steel housing and grub screws	102
P 17 FM	Y-bearing plummer block unit with pressed steel housing and eccentric locking collar	106
P 17 RM	Y-bearing plummer block unit with pressed steel housing and grub screws	102
P 17 TF	Y-bearing plummer block unit with pressed steel housing and grub screws	102
P 20 FM	Y-bearing plummer block unit with pressed steel housing and eccentric locking collar	106
P 20 RM	Y-bearing plummer block unit with pressed steel housing and grub screws	102
P 20 TF	Y-bearing plummer block unit with pressed steel housing and grub screws	102
P 20 TR	Y-bearing plummer block unit with pressed steel housing and grub screws	102
P 20 WF	Y-bearing plummer block unit with pressed steel housing and eccentric locking collar	106
P 25 FM	Y-bearing plummer block unit with pressed steel housing and eccentric locking collar	106
P 25 RM	Y-bearing plummer block unit with pressed steel housing and grub screws	102
P 25 TF	Y-bearing plummer block unit with pressed steel housing and grub screws	102
P 25 TR	Y-bearing plummer block unit with pressed steel housing and grub screws	102
P 25 WF	Y-bearing plummer block unit with pressed steel housing and eccentric locking collar	106
P 3/4 FM	Y-bearing plummer block unit with pressed steel housing and eccentric locking collar	106
P 3/4 TF	Y-bearing plummer block unit with pressed steel housing and grub screws	102
P 3/4 TR	Y-bearing plummer block unit with pressed steel housing and grub screws	102
P 30 FM	Y-bearing plummer block unit with pressed steel housing and eccentric locking collar	106
P 30 RM	Y-bearing plummer block unit with pressed steel housing and grub screws	102
P 30 TF	Y-bearing plummer block unit with pressed steel housing and grub screws	102
P 30 TR	Y-bearing plummer block unit with pressed steel housing and grub screws	102
P 30 WF	Y-bearing plummer block unit with pressed steel housing and eccentric locking collar	106
P 35 FM	Y-bearing plummer block unit with pressed steel housing and eccentric locking collar	106
P 35 RM	Y-bearing plummer block unit with pressed steel housing and grub screws	104
P 35 TF	Y-bearing plummer block unit with pressed steel housing and grub screws	104
P 35 TR	Y-bearing plummer block unit with pressed steel housing and grub screws	104
P 35 WF	Y-bearing plummer block unit with pressed steel housing and eccentric locking collar	106
P 40	Plummer block housing, pressed steel	103
P 40 FM	Y-bearing plummer block unit with pressed steel housing and eccentric locking collar	106
P 40 RM	Y-bearing plummer block unit with pressed steel housing and grub screws	104
P 40 TF	Y-bearing plummer block unit with pressed steel housing and grub screws	104
P 40 TR	Y-bearing plummer block unit with pressed steel housing and grub screws	104
P 40 WF	Y-bearing plummer block unit with pressed steel housing and eccentric locking collar	106
P 45 FM	Y-bearing plummer block unit with pressed steel housing and eccentric locking collar	106
P 45 RM	Y-bearing plummer block unit with pressed steel housing and grub screws	104
P 45 TF	Y-bearing plummer block unit with pressed steel housing and grub screws	104
P 45 TR	Y-bearing plummer block unit with pressed steel housing and grub screws	104
P 45 WF	Y-bearing plummer block unit with pressed steel housing and eccentric locking collar	106
P 47	Plummer block housing, pressed steel	103
P 47 R-12 TF	Y-bearing plummer block unit with pressed steel housing and grub screws	102
P 47 R-15 FM	Y-bearing plummer block unit with pressed steel housing and eccentric locking collar	106
P 47 R-15 TF	Y-bearing plummer block unit with pressed steel housing and grub screws	102
P 47 R-17 FM	Y-bearing plummer block unit with pressed steel housing and eccentric locking collar	106
P 47 R-17 RM	Y-bearing plummer block unit with pressed steel housing and grub screws	102
P 47 R-17 TF	Y-bearing plummer block unit with pressed steel housing and grub screws	102
P 52	Plummer block housing, pressed steel	103
P 52 R-20 FM	Y-bearing plummer block unit with pressed steel housing and eccentric locking collar	106
P 52 R-20 RM	Y-bearing plummer block unit with pressed steel housing and grub screws	102
P 52 R-20 TF	Y-bearing plummer block unit with pressed steel housing and grub screws	102
P 52 R-20 WF	Y-bearing plummer block unit with pressed steel housing and eccentric locking collar	106
P 52 R-3/4 FM	Y-bearing plummer block unit with pressed steel housing and eccentric locking collar	106
P 52 R-3/4 TF	Y-bearing plummer block unit with pressed steel housing and grub screws	102
P 62	Plummer block housing, pressed steel	103
P 62 R-1. FM	Y-bearing plummer block unit with pressed steel housing and eccentric locking collar	106
P 62 R-1. TF	Y-bearing plummer block unit with pressed steel housing and grub screws	102
P 62 R-25 FM	Y-bearing plummer block unit with pressed steel housing and eccentric locking collar	106
P 62 R-25 RM	Y-bearing plummer block unit with pressed steel housing and grub screws	102
P 62 R-25 TF	Y-bearing plummer block unit with pressed steel housing and grub screws	102

rgab.ru Берг АБ bergab@ya.ru Тел. (495)-228-06-21, факс (495) 22

rgab.ru Берг АБ bergab@ya.ru Тел. (495)-228-06-21, факс (495) 22

Designation	Product	Page
P 62 R-25 WF	Y-bearing plummer block unit with pressed steel housing and eccentric locking collar	106
P 72	Plummer block housing, pressed steel	103
P 72 R-30 FM	Y-bearing plummer block unit with pressed steel housing and eccentric locking collar	106
P 72 R-30 RM	Y-bearing plummer block unit with pressed steel housing and grub screws	102
P 72 R-30 TF	Y-bearing plummer block unit with pressed steel housing and grub screws	102
P 72 R-30 WF	Y-bearing plummer block unit with pressed steel housing and eccentric locking collar	106
P 80	Plummer block housing, pressed steel	105
P 80 R-1.1/4 TF	Y-bearing plummer block unit with pressed steel housing and grub screws	102
P 80 R-35 FM	Y-bearing plummer block unit with pressed steel housing and eccentric locking collar	106
P 80 R-35 RM	Y-bearing plummer block unit with pressed steel housing and grub screws	104
P 80 R-35 TF	Y-bearing plummer block unit with pressed steel housing and grub screws	104
P 80 R-35 WF	Y-bearing plummer block unit with pressed steel housing and eccentric locking collar	106
P 85	Plummer block housing, pressed steel	105
P 85 R-1.1/2 FM	Y-bearing plummer block unit with pressed steel housing and eccentric locking collar	106
P 85 R-1.1/2 TF	Y-bearing plummer block unit with pressed steel housing and grub screws	104
P 85 R-40 FM	Y-bearing plummer block unit with pressed steel housing and eccentric locking collar	106
P 85 R-40 RM	Y-bearing plummer block unit with pressed steel housing and grub screws	104
P 85 R-40 TF	Y-bearing plummer block unit with pressed steel housing and grub screws	104
P 85 R-40 WF	Y-bearing plummer block unit with pressed steel housing and eccentric locking collar	106
PF 1. FM	Y-bearing flanged unit with pressed steel housing and eccentric locking collar	156
PF 1.TF	Y-bearing flanged unit with pressed steel housing and grub screws	152
PF 1.TR	Y-bearing flanged unit with pressed steel housing and grub screws	152
PF 1.1/2 FM	Y-bearing flanged unit with pressed steel housing and eccentric locking collar	158
PF 1.1/2 TF	Y-bearing flanged unit with pressed steel housing and grub screws	154
PF 1.1/2 TR	Y-bearing flanged unit with pressed steel housing and grub screws	154
PF 1.1/4 TF	Y-bearing flanged unit with pressed steel housing and grub screws	152
PF 1.1/4 TR	Y-bearing flanged unit with pressed steel housing and grub screws	152
PF 1.3/4 TF	Y-bearing flanged unit with pressed steel housing and grub screws	154
PF 1.3/4 TR	Y-bearing flanged unit with pressed steel housing and grub screws	154
PF 12 TF	Y-bearing flanged unit with pressed steel housing and grub screws	150
PF 15 FM	Y-bearing flanged unit with pressed steel housing and eccentric locking collar	156
PF 15 TF	Y-bearing flanged unit with pressed steel housing and grub screws	150
PF 17 FM	Y-bearing flanged unit with pressed steel housing and eccentric locking collar	156
PF 17 RM	Y-bearing flanged unit with pressed steel housing and grub screws	150
PF 17 TF	Y-bearing flanged unit with pressed steel housing and grub screws	150
PF 20 FM	Y-bearing flanged unit with pressed steel housing and eccentric locking collar	156
PF 20 RM	Y-bearing flanged unit with pressed steel housing and grub screws	150
PF 20 TF	Y-bearing flanged unit with pressed steel housing and grub screws	150
PF 20 TR	Y-bearing flanged unit with pressed steel housing and grub screws	150
PF 20 WF	Y-bearing flanged unit with pressed steel housing and eccentric locking collar	156
PF 25 FM	Y-bearing flanged unit with pressed steel housing and eccentric locking collar	156
PF 25 RM	Y-bearing flanged unit with pressed steel housing and grub screws	150
PF 25 TF	Y-bearing flanged unit with pressed steel housing and grub screws	150
PF 25 TR	Y-bearing flanged unit with pressed steel housing and grub screws	150
PF 25 WF	Y-bearing flanged unit with pressed steel housing and eccentric locking collar	156
PF 3/4 FM	Y-bearing flanged unit with pressed steel housing and eccentric locking collar	156
PF 3/4 TF	Y-bearing flanged unit with pressed steel housing and grub screws	150
PF 3/4 TR	Y-bearing flanged unit with pressed steel housing and grub screws	150
PF 30 FM	Y-bearing flanged unit with pressed steel housing and eccentric locking collar	156
PF 30 RM	Y-bearing flanged unit with pressed steel housing and grub screws	152
PF 30 TF	Y-bearing flanged unit with pressed steel housing and grub screws	152
PF 30 TR	Y-bearing flanged unit with pressed steel housing and grub screws	152
PF 30 WF	Y-bearing flanged unit with pressed steel housing and eccentric locking collar	156
PF 35 FM	Y-bearing flanged unit with pressed steel housing and eccentric locking collar	158
PF 35 RM	Y-bearing flanged unit with pressed steel housing and grub screws	152
PF 35 TF	Y-bearing flanged unit with pressed steel housing and grub screws	152
PF 35 TR	Y-bearing flanged unit with pressed steel housing and grub screws	152
PF 35 WF	Y-bearing flanged unit with pressed steel housing and eccentric locking collar	158
PF 40	Flanged housing with round flange, pressed steel	151
PF 40 FM	Y-bearing flanged unit with pressed steel housing and eccentric locking collar	158
PF 40 RM	Y-bearing flanged unit with pressed steel housing and grub screws	148
PF 40 TF	Y-bearing flanged unit with pressed steel housing and grub screws	148
PF 40 TR	Y-bearing flanged unit with pressed steel housing and grub screws	148
PF 40 WF	Y-bearing flanged unit with pressed steel housing and eccentric locking collar	158
PF 45 FM	Y-bearing flanged unit with pressed steel housing and eccentric locking collar	158
PF 45 RM	Y-bearing flanged unit with pressed steel housing and grub screws	148
PF 45 TF	Y-bearing flanged unit with pressed steel housing and grub screws	148
PF 45 TR	Y-bearing flanged unit with pressed steel housing and grub screws	148
PF 45 WF	Y-bearing flanged unit with pressed steel housing and eccentric locking collar	158
PF 47	Flanged housing with round flange, pressed steel	151
PF 50 FM	Y-bearing flanged unit with pressed steel housing and eccentric locking collar	158
PF 50 RM	Y-bearing flanged unit with pressed steel housing and grub screws	148
PF 50 TF	Y-bearing flanged unit with pressed steel housing and grub screws	148
PF 50 TR	Y-bearing flanged unit with pressed steel housing and grub screws	148

rgab.ru Берг АБ bergab@ya.ru Тел. (495)-228-06-21, факс (495) 22

rgab.ru Берг АБ bergab@ya.ru Тел. (495)-228-06-21, факс (495) 22

Designation	Product	Page
PF 50 WF	Y-bearing flanged unit with pressed steel housing and eccentric locking collar	158
PF 52	Flanged housing with round flange, pressed steel	151
PF 62	Flanged housing with round flange, pressed steel	153
PF 72	Flanged housing with round flange, pressed steel	153
PF 80	Flanged housing with round flange, pressed steel	155
PF 85	Flanged housing with round flange, pressed steel	155
PF 90	Flanged housing with round flange, pressed steel	155
PFD 1. FM	Y-bearing flanged unit with pressed steel housing and eccentric locking collar	156
PFD 1.TF	Y-bearing flanged unit with pressed steel housing and grub screws	152
PFD 1.TR	Y-bearing flanged unit with pressed steel housing and grub screws	152
PFD 1.1/2 FM	Y-bearing flanged unit with pressed steel housing and eccentric locking collar	158
PFD 1.1/2 TF	Y-bearing flanged unit with pressed steel housing and grub screws	154
PFD 1.1/2 TR	Y-bearing flanged unit with pressed steel housing and grub screws	154
PFD 1.1/4 TF	Y-bearing flanged unit with pressed steel housing and grub screws	152
PFD 1.1/4 TR	Y-bearing flanged unit with pressed steel housing and grub screws	152
PFD 12 TF	Y-bearing flanged unit with pressed steel housing and grub screws	150
PFD 15 FM	Y-bearing flanged unit with pressed steel housing and eccentric locking collar	156
PFD 15 TF	Y-bearing flanged unit with pressed steel housing and grub screws	150
PFD 17 FM	Y-bearing flanged unit with pressed steel housing and eccentric locking collar	156
PFD 17 RM	Y-bearing flanged unit with pressed steel housing and grub screws	150
PFD 17 TF	Y-bearing flanged unit with pressed steel housing and grub screws	150
PFD 20 FM	Y-bearing flanged unit with pressed steel housing and eccentric locking collar	156
PFD 20 RM	Y-bearing flanged unit with pressed steel housing and grub screws	150
PFD 20 TF	Y-bearing flanged unit with pressed steel housing and grub screws	150
PFD 20 TR	Y-bearing flanged unit with pressed steel housing and grub screws	150
PFD 20 WF	Y-bearing flanged unit with pressed steel housing and eccentric locking collar	156
PFD 25 FM	Y-bearing flanged unit with pressed steel housing and eccentric locking collar	156
PFD 25 RM	Y-bearing flanged unit with pressed steel housing and grub screws	150
PFD 25 TF	Y-bearing flanged unit with pressed steel housing and grub screws	150
PFD 25 TR	Y-bearing flanged unit with pressed steel housing and grub screws	150
PFD 25 WF	Y-bearing flanged unit with pressed steel housing and eccentric locking collar	156
PFD 3/4 FM	Y-bearing flanged unit with pressed steel housing and eccentric locking collar	156
PFD 3/4 TF	Y-bearing flanged unit with pressed steel housing and grub screws	150
PFD 3/4 TR	Y-bearing flanged unit with pressed steel housing and grub screws	150
PFD 30 FM	Y-bearing flanged unit with pressed steel housing and eccentric locking collar	156
PFD 30 RM	Y-bearing flanged unit with pressed steel housing and grub screws	152
PFD 30 TF	Y-bearing flanged unit with pressed steel housing and grub screws	152
PFD 30 TR	Y-bearing flanged unit with pressed steel housing and grub screws	152
PFD 30 WF	Y-bearing flanged unit with pressed steel housing and eccentric locking collar	156
PFD 35 FM	Y-bearing flanged unit with pressed steel housing and eccentric locking collar	158
PFD 35 RM	Y-bearing flanged unit with pressed steel housing and grub screws	152
PFD 35 TF	Y-bearing flanged unit with pressed steel housing and grub screws	152
PFD 35 TR	Y-bearing flanged unit with pressed steel housing and grub screws	152
PFD 35 WF	Y-bearing flanged unit with pressed steel housing and eccentric locking collar	158
PFD 40	Flanged housing with triangular flange, pressed steel	151
PFD 40 FM	Y-bearing flanged unit with pressed steel housing and eccentric locking collar	158
PFD 40 RM	Y-bearing flanged unit with pressed steel housing and grub screws	154
PFD 40 TF	Y-bearing flanged unit with pressed steel housing and grub screws	154
PFD 40 TR	Y-bearing flanged unit with pressed steel housing and grub screws	154
PFD 40 WF	Y-bearing flanged unit with pressed steel housing and eccentric locking collar	158
PFD 47	Flanged housing with triangular flange, pressed steel	151
PFD 52	Flanged housing with triangular flange, pressed steel	151
PFD 62	Flanged housing with triangular flange, pressed steel	153
PFD 72	Flanged housing with triangular flange, pressed steel	153
PFD 80	Flanged housing with triangular flange, pressed steel	155
PFT 1. FM	Y-bearing flanged unit with pressed steel housing and eccentric locking collar	156
PFT 1.TF	Y-bearing flanged unit with pressed steel housing and grub screws	152
PFT 1.TR	Y-bearing flanged unit with pressed steel housing and grub screws	152
PFT 1.1/2 FM	Y-bearing flanged unit with pressed steel housing and eccentric locking collar	158
PFT 1.1/2 TF	Y-bearing flanged unit with pressed steel housing and grub screws	154
PFT 1.1/2 TR	Y-bearing flanged unit with pressed steel housing and grub screws	154
PFT 1.1/4 TF	Y-bearing flanged unit with pressed steel housing and grub screws	152
PFT 1.1/4 TR	Y-bearing flanged unit with pressed steel housing and grub screws	152
PFT 12 TF	Y-bearing flanged unit with pressed steel housing and grub screws	150
PFT 15 FM	Y-bearing flanged unit with pressed steel housing and eccentric locking collar	156
PFT 15 TF	Y-bearing flanged unit with pressed steel housing and grub screws	150
PFT 17 FM	Y-bearing flanged unit with pressed steel housing and eccentric locking collar	156
PFT 17 RM	Y-bearing flanged unit with pressed steel housing and grub screws	150
PFT 17 TF	Y-bearing flanged unit with pressed steel housing and grub screws	150
PFT 20 FM	Y-bearing flanged unit with pressed steel housing and eccentric locking collar	156
PFT 20 RM	Y-bearing flanged unit with pressed steel housing and grub screws	150
PFT 20 TF	Y-bearing flanged unit with pressed steel housing and grub screws	150
PFT 20 TR	Y-bearing flanged unit with pressed steel housing and grub screws	150

rgab.ru Берг АБ bergab@ya.ru Тел. (495)-228-06-21, факс (495) 22

rgab.ru Берг АБ bergab@ya.ru Тел. (495)-228-06-21, факс (495) 22

Designation	Product	Page
PFT 20 WF	Y-bearing flanged unit with pressed steel housing and eccentric locking collar	156
PFT 25 FM	Y-bearing flanged unit with pressed steel housing and eccentric locking collar	156
PFT 25 RM	Y-bearing flanged unit with pressed steel housing and grub screws	150
PFT 25 TF	Y-bearing flanged unit with pressed steel housing and grub screws	150
PFT 25 TR	Y-bearing flanged unit with pressed steel housing and grub screws	150
PFT 25 WF	Y-bearing flanged unit with pressed steel housing and eccentric locking collar	156
PFT 3/4 FM	Y-bearing flanged unit with pressed steel housing and eccentric locking collar	156
PFT 3/4 TF	Y-bearing flanged unit with pressed steel housing and grub screws	150
PFT 3/4 TR	Y-bearing flanged unit with pressed steel housing and grub screws	150
PFT 30 FM	Y-bearing flanged unit with pressed steel housing and eccentric locking collar	156
PFT 30 RM	Y-bearing flanged unit with pressed steel housing and grub screws	152
PFT 30 TF	Y-bearing flanged unit with pressed steel housing and grub screws	152
PFT 30 TR	Y-bearing flanged unit with pressed steel housing and grub screws	152
PFT 30 WF	Y-bearing flanged unit with pressed steel housing and eccentric locking collar	156
PFT 35 FM	Y-bearing flanged unit with pressed steel housing and eccentric locking collar	158
PFT 35 RM	Y-bearing flanged unit with pressed steel housing and grub screws	152
PFT 35 TF	Y-bearing flanged unit with pressed steel housing and grub screws	152
PFT 35 TR	Y-bearing flanged unit with pressed steel housing and grub screws	152
PFT 35 WF	Y-bearing flanged unit with pressed steel housing and eccentric locking collar	158
PFT 40	Flanged housing with oval flange, pressed steel	151
PFT 40 FM	Y-bearing flanged unit with pressed steel housing and eccentric locking collar	158
PFT 40 RM	Y-bearing flanged unit with pressed steel housing and grub screws	154
PFT 40 TF	Y-bearing flanged unit with pressed steel housing and grub screws	154
PFT 40 TR	Y-bearing flanged unit with pressed steel housing and grub screws	154
PFT 40 WF	Y-bearing flanged unit with pressed steel housing and eccentric locking collar	158
PFT 47	Flanged housing with oval flange, pressed steel	151
PFT 52	Flanged housing with oval flange, pressed steel	151
PFT 62	Flanged housing with oval flange, pressed steel	153
PFT 72	Flanged housing with oval flange, pressed steel	153
PFT 80	Flanged housing with oval flange, pressed steel	155
RIS 203	Rubber seating ring	39
RIS 204	Rubber seating ring	39
RIS 205	Rubber seating ring	39
RIS 206 A	Rubber seating ring	39
RIS 207 A	Rubber seating ring	39
RIS 208 A	Rubber seating ring	39
SY 1. PF/AH	ConCentra ball bearing plummer block unit with cast housing	203
SY 1. TF	Y-bearing plummer block unit with cast housing and grub screws	88
SY 1. TR	Y-bearing plummer block unit with cast housing and grub screws	88
SY 1.1/2 PF/AH	ConCentra ball bearing plummer block unit with cast housing	203
SY 1.1/2 TF	Y-bearing plummer block unit with cast housing and grub screws	88
SY 1.1/2 TR	Y-bearing plummer block unit with cast housing and grub screws	88
SY 1.1/4 PF/AH	ConCentra ball bearing plummer block unit with cast housing	203
SY 1.1/4 TF	Y-bearing plummer block unit with cast housing and grub screws	88
SY 1.1/4 TR	Y-bearing plummer block unit with cast housing and grub screws	88
SY 1.11/16 PF/AH	ConCentra ball bearing plummer block unit with cast housing	203
SY 1.15/16 PF/AH	ConCentra ball bearing plummer block unit with cast housing	203
SY 1.3/16 PF/AH	ConCentra ball bearing plummer block unit with cast housing	203
SY 1.3/4 TF	Y-bearing plummer block unit with cast housing and grub screws	90
SY 1.3/8 PF/AH	ConCentra ball bearing plummer block unit with cast housing	203
SY 1.7/16 PF/AH	ConCentra ball bearing plummer block unit with cast housing	203
SY 12 TF	Y-bearing plummer block unit with cast housing and grub screws	88
SY 15 FM	Y-bearing plummer block unit with cast housing and eccentric locking collar	92
SY 15 TF	Y-bearing plummer block unit with cast housing and grub screws	88
SY 17 FM	Y-bearing plummer block unit with cast housing and eccentric locking collar	92
SY 17 TF	Y-bearing plummer block unit with cast housing and grub screws	88
SY 2. TF	Y-bearing plummer block unit with cast housing and grub screws	90
SY 2.1/2 TF	Y-bearing plummer block unit with cast housing and grub screws	90
SY 2.11/16 PF/AH	ConCentra ball bearing plummer block unit with cast housing	203
SY 2.15/16 PF/AH	ConCentra ball bearing plummer block unit with cast housing	203
SY 2.3/16 PF/AH	ConCentra ball bearing plummer block unit with cast housing	203
SY 2.7/16 PF/AH	ConCentra ball bearing plummer block unit with cast housing	203
SY 20 FM	Y-bearing plummer block unit with cast housing and eccentric locking collar	92
SY 20 TF	Y-bearing plummer block unit with cast housing and grub screws	88
SY 20 TR	Y-bearing plummer block unit with cast housing and grub screws	88
SY 20 WF	Y-bearing plummer block unit with cast housing and eccentric locking collar	92
SY 25 FM	Y-bearing plummer block unit with cast housing and eccentric locking collar	92
SY 25 PF	ConCentra ball bearing plummer block unit with cast housing	202
SY 25 TF	Y-bearing plummer block unit with cast housing and grub screws	88
SY 25 TR	Y-bearing plummer block unit with cast housing and grub screws	88
SY 25 WF	Y-bearing plummer block unit with cast housing and eccentric locking collar	92
SY 3/4 TF	Y-bearing plummer block unit with cast housing and grub screws	88
SY 30 FM	Y-bearing plummer block unit with cast housing and eccentric locking collar	92

rgab.ru Берг АБ bergab@ya.ru Тел. (495)-228-06-21, факс (495) 22

rgab.ru Берг АБ bergab@ya.ru Тел. (495)-228-06-21, факс (495) 22

Designation	Product	Page
SY 30 PF	ConCentra ball bearing plummer block unit with cast housing	202
SY 30 TF	Y-bearing plummer block unit with cast housing and grub screws	88
SY 30 TR	Y-bearing plummer block unit with cast housing and grub screws	88
SY 30 WF	Y-bearing plummer block unit with cast housing and eccentric locking collar	92
SY 35 FM	Y-bearing plummer block unit with cast housing and eccentric locking collar	92
SY 35 PF	ConCentra ball bearing plummer block unit with cast housing	202
SY 35 TF	Y-bearing plummer block unit with cast housing and grub screws	88
SY 35 TR	Y-bearing plummer block unit with cast housing and grub screws	88
SY 35 WF	Y-bearing plummer block unit with cast housing and eccentric locking collar	92
SY 40 FM	Y-bearing plummer block unit with cast housing and eccentric locking collar	92
SY 40 PF	ConCentra ball bearing plummer block unit with cast housing	202
SY 40 TF	Y-bearing plummer block unit with cast housing and grub screws	88
SY 40 TR	Y-bearing plummer block unit with cast housing and grub screws	88
SY 40 WF	Y-bearing plummer block unit with cast housing and eccentric locking collar	92
SY 45 FM	Y-bearing plummer block unit with cast housing and eccentric locking collar	92
SY 45 PF	ConCentra ball bearing plummer block unit with cast housing	202
SY 45 TF	Y-bearing plummer block unit with cast housing and grub screws	90
SY 45 TR	Y-bearing plummer block unit with cast housing and grub screws	90
SY 45 WF	Y-bearing plummer block unit with cast housing and eccentric locking collar	92
SY 50 FM	Y-bearing plummer block unit with cast housing and eccentric locking collar	92
SY 50 PF	ConCentra ball bearing plummer block unit with cast housing	202
SY 50 TF	Y-bearing plummer block unit with cast housing and grub screws	90
SY 50 TR	Y-bearing plummer block unit with cast housing and grub screws	90
SY 50 WF	Y-bearing plummer block unit with cast housing and eccentric locking collar	92
SY 55 FM	Y-bearing plummer block unit with cast housing and eccentric locking collar	92
SY 55 PF	ConCentra ball bearing plummer block unit with cast housing	202
SY 55 TF	Y-bearing plummer block unit with cast housing and grub screws	90
SY 55 TR	Y-bearing plummer block unit with cast housing and grub screws	90
SY 55 WF	Y-bearing plummer block unit with cast housing and eccentric locking collar	92
SY 60 FM	Y-bearing plummer block unit with cast housing and eccentric locking collar	92
SY 60 PF	ConCentra ball bearing plummer block unit with cast housing	202
SY 60 TF	Y-bearing plummer block unit with cast housing and grub screws	90
SY 60 TR	Y-bearing plummer block unit with cast housing and grub screws	90
SY 60 WF	Y-bearing plummer block unit with cast housing and eccentric locking collar	92
SY 65 TF	Y-bearing plummer block unit with cast housing and grub screws	90
SY 503 M	Plummer block housing, cast iron	89
SY 504 M	Plummer block housing, cast iron	89
SY 505 M	Plummer block housing, cast iron	89
SY 506 M	Plummer block housing, cast iron	89
SY 507 M	Plummer block housing, cast iron	89
SY 508 M	Plummer block housing, cast iron	89
SY 509 M	Plummer block housing, cast iron	91
SY 510 M	Plummer block housing, cast iron	91
SY 511 M	Plummer block housing, cast iron	91
SY 512 M	Plummer block housing, cast iron	91
SY 513 M	Plummer block housing, cast iron	91
SYF 20 FM	Y-bearing plummer block unit with cast housing and eccentric locking collar	100
SYF 20 TF	Y-bearing plummer block unit with cast housing and grub screws	98
SYF 25 FM	Y-bearing plummer block unit with cast housing and eccentric locking collar	100
SYF 25 TF	Y-bearing plummer block unit with cast housing and grub screws	98
SYF 30 FM	Y-bearing plummer block unit with cast housing and eccentric locking collar	100
SYF 30 TF	Y-bearing plummer block unit with cast housing and grub screws	98
SYF 35 FM	Y-bearing plummer block unit with cast housing and eccentric locking collar	100
SYF 35 TF	Y-bearing plummer block unit with cast housing and grub screws	98
SYF 40 FM	Y-bearing plummer block unit with cast housing and eccentric locking collar	100
SYF 40 TF	Y-bearing plummer block unit with cast housing and grub screws	98
SYF 45 FM	Y-bearing plummer block unit with cast housing and eccentric locking collar	100
SYF 45 TF	Y-bearing plummer block unit with cast housing and grub screws	98
SYF 50 FM	Y-bearing plummer block unit with cast housing and eccentric locking collar	100
SYF 50 TF	Y-bearing plummer block unit with cast housing and grub screws	98
SYF 504	Plummer block housing, short base cast iron	99
SYF 505	Plummer block housing, short base, cast iron	99
SYF 506	Plummer block housing, short base, cast iron	99
SYF 507	Plummer block housing, short base, cast iron	99
SYF 508	Plummer block housing, short base, cast iron	99
SYF 509	Plummer block housing, short base, cast iron	99
SYF 510	Plummer block housing, short base, cast iron	99
SYFJ 20 TF	Y-bearing plummer block unit with cast housing and grub screws	98
SYFJ 25 TF	Y-bearing plummer block unit with cast housing and grub screws	98
SYFJ 30 TF	Y-bearing plummer block unit with cast housing and grub screws	98
SYFJ 35 TF	Y-bearing plummer block unit with cast housing and grub screws	98
SYFJ 40 TF	Y-bearing plummer block unit with cast housing and grub screws	98
SYFJ 45 TF	Y-bearing plummer block unit with cast housing and grub screws	98

rgab.ru Берг АБ bergab@ya.ru Тел. (495)-228-06-21, факс (495) 22

rgab.ru Берг АБ bergab@ya.ru Тел. (495)-228-06-21, факс (495) 22

Designation	Product	Page
SYFJ 50 TF	Y-bearing plummer block unit with cast housing and grub screws	98
SYFJ 504	Plummer block housing, short base, cast iron	99
SYFJ 505	Plummer block housing, short base, cast iron	99
SYFJ 506	Plummer block housing, short base, cast iron	99
SYFJ 507	Plummer block housing, short base, cast iron	99
SYFJ 508	Plummer block housing, short base, cast iron	99
SYFJ 509	Plummer block housing, short base, cast iron	99
SYFJ 510	Plummer block housing, short base, cast iron	99
SYJ 1. TF	Y-bearing plummer block unit with cast housing and grub screws	88
SYJ 1.1/2 TF	Y-bearing plummer block unit with cast housing and grub screws	88
SYJ 1.1/4 TF	Y-bearing plummer block unit with cast housing and grub screws	88
SYJ 1.3/4 TF	Y-bearing plummer block unit with cast housing and grub screws	90
SYJ 100 TF	Y-bearing plummer block unit with cast housing and grub screws	90
SYJ 2. TF	Y-bearing plummer block unit with cast housing and grub screws	90
SYJ 2.1/2 TF	Y-bearing plummer block unit with cast housing and grub screws	90
SYJ 20 TF	Y-bearing plummer block unit with cast housing and grub screws	88
SYJ 25 KF	Y-bearing plummer block unit with cast housing and tapered bore	94
SYJ 25 TF	Y-bearing plummer block unit with cast housing and grub screws	88
SYJ 3/4 TF	Y-bearing plummer block unit with cast housing and grub screws	88
SYJ 30 KF	Y-bearing plummer block unit with cast housing and tapered bore	94
SYJ 30 TF	Y-bearing plummer block unit with cast housing and grub screws	88
SYJ 35 KF	Y-bearing plummer block unit with cast housing and tapered bore	94
SYJ 35 TF	Y-bearing plummer block unit with cast housing and grub screws	88
SYJ 40 KF	Y-bearing plummer block unit with cast housing and tapered bore	94
SYJ 40 TF	Y-bearing plummer block unit with cast housing and grub screws	88
SYJ 45 KF	Y-bearing plummer block unit with cast housing and tapered bore	94
SYJ 45 TF	Y-bearing plummer block unit with cast housing and grub screws	90
SYJ 50 KF	Y-bearing plummer block unit with cast housing and tapered bore	94
SYJ 50 TF	Y-bearing plummer block unit with cast housing and grub screws	90
SYJ 55 KF	Y-bearing plummer block unit with cast housing and tapered bore	94
SYJ 55 TF	Y-bearing plummer block unit with cast housing and grub screws	90
SYJ 60 KF	Y-bearing plummer block unit with cast housing and tapered bore	96
SYJ 60 TF	Y-bearing plummer block unit with cast housing and grub screws	90
SYJ 65 KF	Y-bearing plummer block unit with cast housing and tapered bore	96
SYJ 65 TF	Y-bearing plummer block unit with cast housing and grub screws	90
SYJ 70 TF	Y-bearing plummer block unit with cast housing and grub screws	90
SYJ 75 TF	Y-bearing plummer block unit with cast housing and grub screws	90
SYJ 80 TF	Y-bearing plummer block unit with cast housing and grub screws	90
SYJ 90 TF	Y-bearing plummer block unit with cast housing and grub screws	90
SYJ 504	Plummer block housing, cast iron	89
SYJ 505	Plummer block housing, cast iron	89
SYJ 506	Plummer block housing, cast iron	89
SYJ 507	Plummer block housing, cast iron	89
SYJ 508	Plummer block housing, cast iron	89
SYJ 509	Plummer block housing, cast iron	91
SYJ 510	Plummer block housing, cast iron	91
SYJ 511	Plummer block housing, cast iron	91
SYJ 512	Plummer block housing, cast iron	91
SYJ 513	Plummer block housing, cast iron	91
SYJ 514	Plummer block housing, cast iron	91
SYJ 515	Plummer block housing, cast iron	91
SYJ 516	Plummer block housing, cast iron	91
SYJ 518	Plummer block housing, cast iron	91
SYJ 520	Plummer block housing, cast iron	91
SYK 20 TF	Y-TECH plummer block unit with grub screws	84
SYK 20 TR	Y-TECH plummer block unit with grub screws	84
SYK 25 TF	Y-TECH plummer block unit with grub screws	84
SYK 25 TR	Y-TECH plummer block unit with grub screws	84
SYK 30 TF	Y-TECH plummer block unit with grub screws	84
SYK 30 TR	Y-TECH plummer block unit with grub screws	84
SYK 35 TF	Y-TECH plummer block unit with grub screws	84
SYK 35 TR	Y-TECH plummer block unit with grub screws	84
SYK 40 TF	Y-TECH plummer block unit with grub screws	84
SYK 40 TR	Y-TECH plummer block unit with grub screws	84
SYK 504	Y-TECH plummer block housing, black	85
SYK 505	Y-TECH plummer block housing, black	85
SYK 506	Y-TECH plummer block housing, black	85
SYK 507	Y-TECH plummer block housing, black	85
SYK 508	Y-TECH plummer block housing, black	85
SYKC 20 NTH	Y-TECH plummer block unit with grub screws, regreaseable	86
SYKC 25 NTH	Y-TECH plummer block unit with grub screws, regreaseable	86
SYKC 30 NTH	Y-TECH plummer block unit with grub screws, regreaseable	86

rgab.ru Берг АБ bergab@ya.ru Тел. (495)-228-06-21, факс (495) 22

rgab.ru Берг АБ bergab@ya.ru Тел. (495)-228-06-21, факс (495) 22

Designation	Product	Page
SYKC 35 NTH	Y-TECH plummer block unit with grub screws, regreaseable	86
SYKC 40 NTH	Y-TECH plummer block unit with grub screws, regreaseable	86
SYKC 504 N	Y-TECH plummer block housing, white, with grease nipple	87
SYKC 505 N	Y-TECH plummer block housing, white, with grease nipple	87
SYKC 506 N	Y-TECH plummer block housing, white, with grease nipple	87
SYKC 507 N	Y-TECH plummer block housing, white, with grease nipple	87
SYKC 508 N	Y-TECH plummer block housing, white, with grease nipple	87
TU 1. TF	Y-bearing take-up unit with cast housing and grub screws	164
TU 1.1/2 TF	Y-bearing take-up unit with cast housing and grub screws	164
TU 1.1/4 TF	Y-bearing take-up unit with cast housing and grub screws	164
TU 2. TF	Y-bearing take-up unit with cast housing and grub screws	164
TU 20 FM	Y-bearing take-up unit with cast housing and eccentric locking collar	166
TU 20 TF	Y-bearing take-up unit with cast housing and grub screws	164
TU 25 FM	Y-bearing take-up unit with cast housing and eccentric locking collar	166
TU 25 TF	Y-bearing take-up unit with cast housing and grub screws	164
TU 30 FM	Y-bearing take-up unit with cast housing and eccentric locking collar	166
TU 30 TF	Y-bearing take-up unit with cast housing and grub screws	164
TU 35 FM	Y-bearing take-up unit with cast housing and eccentric locking collar	166
TU 35 TF	Y-bearing take-up unit with cast housing and grub screws	164
TU 40 FM	Y-bearing take-up unit with cast housing and eccentric locking collar	166
TU 40 TF	Y-bearing take-up unit with cast housing and grub screws	164
TU 45 FM	Y-bearing take-up unit with cast housing and eccentric locking collar	166
TU 45 TF	Y-bearing take-up unit with cast housing and grub screws	164
TU 50 FM	Y-bearing take-up unit with cast housing and eccentric locking collar	166
TU 50 TF	Y-bearing take-up unit with cast housing and grub screws	164
TU 55 FM	Y-bearing take-up unit with cast housing and eccentric locking collar	166
TU 55 TF	Y-bearing take-up unit with cast housing and grub screws	164
TU 504 M	Y-bearing take-up housing, cast iron	165
TU 505 M	Y-bearing take-up housing, cast iron	165
TU 506 M	Y-bearing take-up housing, cast iron	165
TU 507 M	Y-bearing take-up housing, cast iron	165
TU 508 M	Y-bearing take-up housing, cast iron	165
TU 509 M	Y-bearing take-up housing, cast iron	165
TU 510 M	Y-bearing take-up housing, cast iron	165
TU 511 M	Y-bearing take-up housing, cast iron	165
TUJ 20 TF	Y-bearing take-up unit with cast housing and grub screws	164
TUJ 25 TF	Y-bearing take-up unit with cast housing and grub screws	164
TUJ 30 TF	Y-bearing take-up unit with cast housing and grub screws	164
TUJ 35 TF	Y-bearing take-up unit with cast housing and grub screws	164
TUJ 40 TF	Y-bearing take-up unit with cast housing and grub screws	164
TUJ 45 TF	Y-bearing take-up unit with cast housing and grub screws	164
TUJ 50 TF	Y-bearing take-up unit with cast housing and grub screws	164
TUJ 55 TF	Y-bearing take-up unit with cast housing and grub screws	164
TUJ 60 TF	Y-bearing take-up unit with cast housing and grub screws	164
TUJ 504	Y-bearing take-up housing, cast iron	165
TUJ 505	Y-bearing take-up housing, cast iron	165
TUJ 506	Y-bearing take-up housing, cast iron	165
TUJ 507	Y-bearing take-up housing, cast iron	165
TUJ 508	Y-bearing take-up housing, cast iron	165
TUJ 509	Y-bearing take-up housing, cast iron	165
TUJ 510	Y-bearing take-up housing, cast iron	165
TUJ 511	Y-bearing take-up housing, cast iron	165
TUJ 512	Y-bearing take-up housing, cast iron	165
YAR 203-2F	Y-bearing with grub screws	65
YAR 203/12-2F	Y-bearing with grub screws	65
YAR 203/15-2F	Y-bearing with grub screws	65
YAR 204-2F	Y-bearing with grub screws	65
YAR 204-2RF	Y-bearing with grub screws	65
YAR 204-2RF/HV	Y-bearing of stainless steel with grub screws	67
YAR 204-2RF/VE495	Y-bearing with grub screws, zinc-coated components	67
YAR 204-012-2F	Y-bearing with grub screws	65
YAR 204-012-2RF	Y-bearing with grub screws	65
YAR 204-012-2RF/HV	Y-bearing of stainless steel with grub screws	67
YAR 205-2F	Y-bearing with grub screws	65
YAR 205-2RF	Y-bearing with grub screws	65
YAR 205-2RF/HV	Y-bearing of stainless steel with grub screws	67
YAR 205-2RF/VE495	Y-bearing with grub screws, zinc-coated components	67
YAR 205-100-2F	Y-bearing with grub screws	65
YAR 205-100-2RF	Y-bearing with grub screws	65
YAR 205-100-2RF/HV	Y-bearing of stainless steel with grub screws	67
YAR 206-2F	Y-bearing with grub screws	65
YAR 206-2RF	Y-bearing with grub screws	65

rgab.ru Берг АБ bergab@ya.ru Тел. (495)-228-06-21, факс (495) 22

rgab.ru Берг АБ bergab@ya.ru Тел. (495)-228-06-21, факс (495) 22

Designation	Product	Page
YAR 206-2RF/HV	Y-bearing of stainless steel with grub screws	67
YAR 206-2RF/VE495	Y-bearing with grub screws, zinc-coated components	67
YAR 206-103-2RF/HV	Y-bearing of stainless steel with grub screws	67
YAR 207-2F	Y-bearing with grub screws	65
YAR 207-2RF	Y-bearing with grub screws	65
YAR 207-2RF/HV	Y-bearing of stainless steel with grub screws	67
YAR 207-2RF/VE495	Y-bearing with grub screws, zinc-coated components	67
YAR 207-104-2F	Y-bearing with grub screws	65
YAR 207-104-2RF	Y-bearing with grub screws	65
YAR 207-104-2RF/HV	Y-bearing of stainless steel with grub screws	67
YAR 207-107-2RF/HV	Y-bearing of stainless steel with grub screws	67
YAR 208-2F	Y-bearing with grub screws	65
YAR 208-2RF	Y-bearing with grub screws	65
YAR 208-2RF/HV	Y-bearing with grub screws	67
YAR 208-2RF/VE495	Y-bearing with grub screws, zinc-coated components	67
YAR 208-108-2F	Y-bearing with grub screws	65
YAR 208-108-2RF	Y-bearing with grub screws	65
YAR 208-108-2RF/HV	Y-bearing of stainless steel with grub screws	67
YAR 209-2F	Y-bearing with grub screws	66
YAR 209-2RF	Y-bearing with grub screws	66
YAR 209-112-2F	Y-bearing with grub screws	65
YAR 209-112-2RF	Y-bearing with grub screws	65
YAR 210-2F	Y-bearing with grub screws	66
YAR 210-2RF	Y-bearing with grub screws	66
YAR 211-2F	Y-bearing with grub screws	66
YAR 211-2RF	Y-bearing with grub screws	66
YAR 211-200-2F	Y-bearing with grub screws	66
YAR 211-200-2RF	Y-bearing with grub screws	66
YAR 212-2F	Y-bearing with grub screws	66
YAR 212-2RF	Y-bearing with grub screws	66
YAR 213-2F	Y-bearing with grub screws	66
YAR 213-2RF	Y-bearing with grub screws	66
YAR 213-208-2F	Y-bearing with grub screws	66
YAR 213-208-2RF	Y-bearing with grub screws	66
YAR 214-2F	Y-bearing with grub screws	66
YAR 215-2F	Y-bearing with grub screws	66
YAR 216-2F	Y-bearing with grub screws	66
YAR 217-2F	Y-bearing with grub screws	66
YAR 218-2F	Y-bearing with grub screws	66
YAR 220-2F	Y-bearing with grub screws	66
YAT 203	Y-bearing with grub screws	65
YAT 204	Y-bearing with grub screws	65
YAT 205	Y-bearing with grub screws	65
YAT 206	Y-bearing with grub screws	65
YAT 207	Y-bearing with grub screws	65
YAT 208	Y-bearing with grub screws	65
YAT 209	Y-bearing with grub screws	66
YAT 210	Y-bearing with grub screws	66
YEL 204-2F	Y-bearing with eccentric locking collar	68
YEL 205-2F	Y-bearing with eccentric locking collar	68
YEL 206-2F	Y-bearing with eccentric locking collar	68
YEL 207-2F	Y-bearing with eccentric locking collar	68
YEL 208-2F	Y-bearing with eccentric locking collar	68
YEL 209-2F	Y-bearing with eccentric locking collar	69
YEL 210-2F	Y-bearing with eccentric locking collar	69
YEL 211-2F	Y-bearing with eccentric locking collar	69
YEL 212-2F	Y-bearing with eccentric locking collar	69
YET 203	Y-bearing with eccentric locking collar	68
YET 203/15	Y-bearing with eccentric locking collar	68
YET 204	Y-bearing with eccentric locking collar	68
YET 204-012	Y-bearing with eccentric locking collar	68
YET 205	Y-bearing with eccentric locking collar	68
YET 205-100	Y-bearing with eccentric locking collar	68
YET 206	Y-bearing with eccentric locking collar	68
YET 207	Y-bearing with eccentric locking collar	68
YET 208	Y-bearing with eccentric locking collar	68
YET 208-108	Y-bearing with eccentric locking collar	68
YET 209	Y-bearing with eccentric locking collar	69
YET 210	Y-bearing with eccentric locking collar	69
YET 211	Y-bearing with eccentric locking collar	69
YET 212	Y-bearing with eccentric locking collar	69

rgab.ru Берг АБ bergab@ya.ru Тел. (495)-228-06-21, факс (495) 22

rgab.ru Берг АБ bergab@ya.ru Тел. (495)-228-06-21, факс (495) 22

Designation	Product	Page
YSA 205-2FK	Y-bearing with tapered bore	70
YSA 206-2FK	Y-bearing with tapered bore	70
YSA 207-2FK	Y-bearing with tapered bore	70
YSA 208-2FK	Y-bearing with tapered bore	70
YSA 209-2FK	Y-bearing with tapered bore	70
YSA 210-2FK	Y-bearing with tapered bore	70
YSA 211-2FK	Y-bearing with tapered bore	70
YSA 212-2FK	Y-bearing with tapered bore	71
YSA 213-2FK	Y-bearing with tapered bore	71

rgab.ru Берг АБ bergab@ya.ru Тел. (495)-228-06-21, факс (495) 22

rgab.ru Берг АБ bergab@ya.ru Тел. (495)-228-06-21, факс (495) 22

SKF®

rgab.ru Берг АБ bergab@ya.ru Тел. (495)-228-06-21, факс (495) 22